NAVAIR 13-1-6.7-3

TECHNICAL MANUAL

AVIATION-CREW SYSTEMS

AIRCREW PERSONAL PROTECTIVE EQUIPMENT

(HELMETS AND MASKS)

N68936-04-D-0008

This manual update includes Basic, dated 1 May 1999, thru Change 7, dated 1 August 2004.

DISTRIBUTION STATEMENT C. Distribution authorized to U.S. Government agencies and their contractors to protect publications required for official use or for administrative or operational purposes only, determined on 1 May 1999. Other requests for this document shall be referred to Commanding Officer, Naval Air Technical Data and Engineering Service Command, Naval Air Station North Island, P.O. Box 357031, Building 90 Distribution, San Diego, CA 92135-7031.

DESTRUCTION NOTICE — For unclassified, limited documents, destroy by any method that will prevent disclosure of contents or reconstruction of the document.

Published by Direction of the Commander, Naval Air Systems Command

1 MAY 1999

CHANGE 7 - 1 AUGUST 2004

LIST OF EFFECTIVE PAGES

Insert latest changed pages; dispose of superseded pages in accordance with applicable regulations.

NOTE: On a changed page, the portion of the text affected by the latest change is indicated by a vertical line, or other change symbol, in the outer margin of the page. Changes to illustrations are indicated by miniature pointing hands. Changes to wiring diagrams are indicated by shaded areas.

Dates of issue for original and changed pages are:

Original 0 ..... 1 May 1999
Change 1 ..... 15 Jan 2000
(Incorp IRACs 1 and 3 thru 7)
(IRAC 2 cancelled)
Change 2 ..... 15 Jul 2000
(Incorp IRACs 8 thru 12)
Change 3 ..... 1 Dec 2000
(Incorp IRACs 13 and 14)
Change 4 ..... 1 Nov 2001
(Incorp IRACs 15 and 16)
Change 5 ..... 1 Sep 2002
Change 6 ..... 1 Jan 2004
(Incorp IRAC 17)
Change 7 ..... 1 Aug 2004

Total number of pages in this manual is 486 consisting of the following:

Page No.	#Change No.	Page No.	#Change No.	Page No.	#Change No.
Title	7	3-15	5	3-50B Blank	1
A — C	7	3-16 — 3-20	6	3-51	5
i	7	3-21 — 3-22	5	3-52 — 3-53	4
ii	6	3-23 — 3-24	6	3-54	5
iii	0	3-25	5	3-55	4
iv	6	3-26	4	3-56	0
v	7	3-26A — 3-26 B	6	3-57 — 3-58	6
vi	5	3-27	4	3-59 — 3-62	0
vii	6	3-28	7	3-63	5
viii	7	3-28A — 3-28B	7	3-64 — 3-65	0
ix	6	3-29	5	3-66	5
x Blank	6	3-30	6	3-67	3
1-1 — 1-3	6	3-31 — 3-32	0	3-68 — 3-71	0
1-4 Blank	6	3-33	7	3-72	6
2-1 — 2-5	7	3-34	0	3-73	0
2-6 Blank	7	3-35	5	3-74	6
3-1	6	3-36	3	3-75	0
3-2	5	3-37	1	3-76	1
3-3 — 3-4	7	3-38	6	3-77 — 3-78	7
3-4A	6	3-39	0	3-79	0
3-4B Blank	6	3-40 — 3-41	6	3-80	7
3-5	6	3-42 — 3-43	7	3-81	6
3-6	4	3-44	4	3-82 — 3-83	0
3-7 — 3-8	6	3-45	7	3-84 Blank	0
3-9	3	3-46	6	3-85	2
3-10	4	3-46A Deleted	7	3-85A — 3-85B	2
3-11	7	3-46B Blank Deleted	7	3-86 — 3-87	2
3-12	6	3-47	1	3-88 Blank	2
3-12A	7	3-48	7	3-89	2
3-12B	5	3-49	1	3-89A — 3-89B	2
3-13	5	3-50	4	3-90 — 3-91	2
3-14	6	3-50A	1	3-92 Blank	2

Major changes resulting from this change are as follows:

1. Incorporation of Aircraft Accident Report Inspection.
2. Incorporation of installation, fitting, and sizing procedures for the Communications Ear Plug (CEP).
3. Incorporation of Microphone Mount on T-Bayonet, Section 8-4.
4. Incorporation of edgeroll repair procedures.
5. Miscellaneous changes.

Zero in this column indicates an original page.

LIST OF EFFECTIVE PAGES (Cont)

Page No.	#Change No.
3-93	2
3-93A — 3-93B	2
3-94 — 3-95	2
3-96 Blank	2
3-97	2
3-97A — 3-97B	2
3-98 — 3-99	2
3-100 Blank	2
3-101 — 3-103	0
3-104 — 3-105	7
3-106	7
3-106A	6
3-106B Blank	6
3-107	7
3-108	6
3-108A	6
3-108B Blank	6
3-109	6
3-110 — 3-112	5
3-113	4
3-114 — 3-115	0
3-116	1
3-117 — 3-118	4
3-119 — 3-120 Deleted	4
3-121	0
3-122 — 3-123	7
3-124 Blank	7
4-1 — 4-2	6
4-3	7
4-4	6
4-4A — 4-4B	6
4-5 — 4-6	4
4-7 — 4-9	6
4-10	4
4-11	0
4-12	1
4-13	5
4-14 Blank	5
4-15	1
4-16	0
4-17	6
4-18	4
4-19	0
4-20	6
4-21	0
4-22	7
4-23	1
4-24	5
4-25	1
4-26 — 4-27	7
4-28	0
4-29	5
4-30	7
4-31	5
4-32	1
4-33	0
4-34 — 4-36	7
4-37	4
4-38 — 4-41	1
4-42	6
4-42A	1
4-42B Blank	1
4-43	5
4-44	3
4-45 — 4-48	6
4-49	4
4-50 — 4-52	6
4-53	0
4-54 — 4-55	7
4-56	0
4-57	3
4-58	4
4-59	3
4-60	5
4-61	3
4-62	5
4-62A	6
4-62B Blank	6
4-63	6
4-64	5
4-65	0
4-66	6
4-66A	6
4-66B Blank	6
4-67	5
4-68	0
4-68A	5
4-68B Blank	5
4-69	6
4-70	0
4-71	4
4-72 — 4-73	0
4-74	6
4-74A	6
4-74B Blank	6
4-75	1
4-76	6
4-76A — 4-76B Deleted	6
4-77 — 4-80	6
5-1	0
5-2 — 5-4	6
5-5 — 5-12	0
5-13	7
5-14	5
5-15	0
5-16	6
5-17	5
5-18	0
5-19 — 5-20	6
5-20A	5
5-20B Blank	5
5-21	4
5-22 — 5-23	2
5-24	6
5-24A	6
5-24B Blank	6
5-25	5
5-26	4
5-26A	4
5-26B Blank	4
5-27	4
5-28	3
5-29 — 5-30	5
5-31 — 5-32	6
5-33	3
5-34	7
5-35	5
5-36	0
5-37	6
5-38	0
5-39	5
5-40 — 5-41	3
5-42	5
5-43	0
5-44 — 5-45	4
5-46	3
5-47	4
5-48	6
5-48A	6
5-48B Blank	6
5-49	4
5-50	0
5-51	7
5-52	3
5-53	0
5-54	3
5-55	2
5-55A — 5-55B	2
5-56 Blank	2
5-57 — 5-59	0
5-60	4
5-61	0
5-62	5
5-63	0
5-64	4
5-65	0
5-66	4
5-67	0
5-68	3
5-69	0
5-70	4
5-71 — 5-73	0
5-74	5
5-75	3
5-76 Blank	3
6-1 — 6-2	0
6-3 — 6-4	6
6-5	3
6-6 — 6-8	5
6-9 — 6-11	0
6-12	6

Zero in this column indicates an original page.

LIST OF EFFECTIVE PAGES (Cont)

Page No.	#Change No.
6-13 — 6-14	0
6-15	5
6-16 — 6-17	6
6-18	5
6-19	3
6-20	5
6-21	6
6-22 — 6-24	5
6-25 — 6-27	4
6-28	5
6-29	4
6-30	7
6-31	6
6-32	4
6-33	6
6-34 — 6-35	0
6-36	6
6-37	3
6-38	4
6-39	7
6-40 — 6-41	0
6-42	3
6-43	0
6-44	5
6-45	0
6-46	3
6-47	0
6-48	3
6-49	0
6-50	3
6-51	0
6-52	3
6-53 — 6-54	0
6-55 — 6-56	6
6-57 — 6-62	0
6-63	5
6-64 — 6-66	0
6-67	4
6-68 — 6-69	0
6-70 — 6-72	6
7-1 — 7-19	6
7-20 Blank	6
8-1	3
8-2 — 8-3	7
8-4	5
8-5	7
8-6 Blank	7
A-1 — A-17	0
A-18 Blank	0
Glossary-1 — Glossary-2	0
Glossary-3	6
Glossary-4	0
Glossary-5	6
Glossary-6 Blank	6
Index-1 — Index-3	7
Index-4	6
Index-5	7
Index-6	6
Index-7	7
Index-8	6
Index-9	7
Index-10	6
Index-11 — Index-12	7
Index-13	6
Index-14	7
Index-15 — Index-16	6
Index-17	7
Index-18	6

Zero in this column indicates an original page.

TABLE OF CONTENTS

Chapter		Page
1	INTRODUCTION	
1-1.	General	1-1
1-7.	Description of NAVAIR 13-1-6.7-3	1-2
1-17.	Levels of Maintenance	1-2
1-19.	Supplementary Publications	1-3
2	MAINTENANCE CONCEPTS, SCHEDULING AND DOCUMENTATION	
	(Section 2-1. Maintenance Concepts)	
2-1.	General	2-1
	(Section 2-2. Maintenance Scheduling)	
2-5.	General	2-1
	(Section 2-2A. Accident Evaluation)	
2-6A.	Aircraft Accident Report Inspection	2-1
	(Section 2-3. Maintenance Documents)	
2-7.	General	2-2
	(Section 2-4. Illustrated Parts Breakdown Information)	
2-10.	General	2-2
2-13.	Group Assembly Parts List	2-2
2-22.	Numerical Index	2-3
3	AIRCREW HELMET ASSEMBLIES FOR ROTARY WING AIRCRAFT	
	(Section 3-1. Description)	
3-1.	General	3-1
3-3.	Configuration	3-1
3-15.	Support Equipment	3-5
3-18.	Application	3-6
3-20.	Reference Numbers, Items, and Supply Data	3-6
	(Section 3-2. Sizing)	
3-22.	General	3-9
3-24.	Sizing	3-9
	(Section 3-3. Helmet Buildup)	
3-26.	General	3-10
3-28.	Assembly of Components	3-10
	(Section 3-4. Modifications)	
3-59.	General	3-41

TABLE OF CONTENTS

Chapter Page

(Section 3-5. Maintenance)

3-61. General 3-42
3-63. Inspection 3-42
3-73. Cleaning 3-45
3-75. Replacement/Repair of Helmet Components 3-46

(Section 3-6. Illustrated Parts Breakdown)

3-111. General 3-103

4 TACAIR HELMET ASSEMBLIES FOR FIXED WING AIRCRAFT

(Section 4-1. Description)

4-1. General 4-1
4-4. Configuration 4-1
4-22. Ground Support Equipment 4-5
4-26. Application 4-5
4-28. Reference Numbers, Items, and Supply Data 4-5

(Section 4-2. Sizing)

4-30. General 4-5
4-32. Sizing 4-5

(Section 4-3. Helmet Configuration Buildup)

4-35. General 4-6
4-38. Assembly of Components 4-6

(Section 4-4. Modifications)

4-58. General 4-30

(Section 4-5. Maintenance)

4-60. General 4-30
4-62. Inspection 4-30
4-68. Helmet Bladder Leakage Test 4-31
4-75. Cleaning 4-34
4-77. Replacement/Repair of Helmet Components 4-35

(Section 4-6. Illustrated Parts Breakdown)

4-102. General 4-55

(Section 4-7. Maintenance (HGU-33/P thru HGU-52/P and HGU-55/P Series Helmets Only)

4-105. General 4-79
4-107. Inspection 4-79
4-112. Disposal of Laser Visor 4-80
4-114. Cleaning 4-80

TABLE OF CONTENTS (Cont)

Chapter Page

5 PRESSURE-DEMAND OXYGEN MASK ASSEMBLIES

(Section 5-1. Description)

5-1. General 5-1
5-4. Configuration 5-1
5-19. Supplementary Equipment 5-2
5-21. Function 5-2
5-25. Ground Support Equipment 5-2
5-28. Application 5-11
5-30. Reference Numbers, Items, and Supply Data 5-11

(Section 5-2. Sizing)

5-32. General 5-13
5-34. Sizing 5-13

(Section 5-3. Oxygen Mask Configuration Buildup)

5-37. General 5-15
5-40. Assembly of Components 5-15

(Section 5-4. Modifications)

5-53. General 5-33

(Section 5-5. Maintenance)

5-55. General 5-34
5-57. Inspection 5-34
5-64. Disassembly 5-35
5-66. Cleaning and Sanitizing 5-35
5-71. Repair 5-39
5-73. Replacement 5-39

(Section 5-6. Illustrated Parts Breakdown)

5-88. General 5-58

6 ENHANCED PRESSURE-DEMAND OXYGEN MASK SYSTEMS MBU-23(V)/P SERIES AND MBU-24/P22P-16

(Section 6-1. Description)

6-1. General 6-1

TABLE OF CONTENTS (Cont)

Chapter Page

(Section 6-2. MBU-23(V)/P Series Oxygen Mask)

6-3. General 6-1
6-6. Configuration 6-1
6-16. Application 6-5
6-18. Service Life 6-5
6-20. Modifications 6-5
6-22. Sizing and Fitting 6-12
6-29. Configuration Build-Up 6-16
6-41. Maintenance 6-30
6-62. Illustrated Parts Breakdown 6-39

(Section 6-3. MBU-24/P22P-16 Oxygen Mask)

6-65. General 6-57
6-67. Configuration 6-57
6-69. Application 6-57
6-71. Service Life 6-57
6-73. Modifications 6-57
6-75. Sizing/Fitting 6-57
6-77. Oxygen Mask Delivery Hose Tolerance 6-57
6-79. Fitting Helmet Bladder Supply Hose 6-59
6-81. Maintenance 6-59
6-99. Illustrated Parts Breakdown 6-67

7 HGU-24/P AND HGU-25(V)2/P CLOTH HELMET ASSEMBLIES AND RELATED SOUND ATTENUATING HEAD SETS AND ACCESSORIES

(Section 7-1. Description)

7-1. General 7-1
7-3. Configuration 7-1
7-9. Application 7-1
7-13. Reference Numbers, Items, and Supply Data 7-2

(Section 7-2. Sizing)

7-15. General 7-5
7-17. Sizing 7-5

(Section 7-3. Helmet Configuration Build-Up)

7-21. General 7-6
7-23. Assembly of Components 7-6
7-27. Installation 7-9

(Section 7-4. Modifications)

7-30. General 7-10

TABLE OF CONTENTS (Cont)

Chapter Page

(Section 7-5. Maintenance)

7-32. General 7-11
7-34. Inspection 7-11
7-39. Cleaning 7-12
7-41. Replacement of Cloth Helmet Components 7-13

(Section 7-6. Illustrated Parts Breakdown)

7-52. General 7-15

8 AUXILIARY PERSONAL EQUIPMENT

(Section 8-1. Description)

8-1. General 8-1

(Section 8-2. Boom Microphone Light, ML-8)

8-3. General 8-1
8-5. Configuration 8-1
8-7. Application 8-1
8-9. Installation 8-1
8-11. Maintenance 8-2

(Section 8-3. Parachutist Goggles)

8-17. General 8-2
8-19. Configuration 8-2
8-21. Application 8-2
8-23. Sizing 8-3
8-25. Modifications 8-3
8-27. Maintenance 8-3

(Section 8-4. Microphone Mount on T-Bayonet)

8-38. General 8-5
8-40. Configuration 8-5
8-42. Application 8-5
8-44. Installation 8-5
8-46. Maintenance 8-5

Appendix A The Metric System and Metric Unit Conversion Charts A-1
Glossary Glossary-1
Alphabetical Index Index-1

LIST OF ILLUSTRATIONS

Figure	Title	Page
3-1.	HGU-84/P Helmet Assembly	3-1
3-2.	Helmet Shell Assembly Components	3-2
3-3.	Thermoplastic Liner Assembly	3-2
3-4.	Earcup Assembly Components	3-2
3-5.	Integrated Chin/Nape Assembly Components	3-5
3-6.	Visor Assemblies and Cover	3-6
3-7.	Communications System Components (HGU-67/P)	3-6
3-8	NVIIS Components	3-7
3-9.	Helmet Sight Assembly Components (HGU-67/P)	3-7
3-10.	CBR Adapter Components	3-7
3-11.	Boresight Tool	3-38
3-12.	Helmet Sight Assembly (HSA) Retract Button	3-40
3-13.	Fabrication of Medium/Large Battery Securing Patch (3151AS112-2)	3-82
3-14.	Fabrication of Extra-Large and Extra-Large Wide Battery Securing Patch (3151AS112-1)	3-83
3-15.	Removable Camouflage Helmet Cover (Medium)	3-85
3-16.	Removable Camouflage Helmet Cover (Large)	3-89
3-17.	Removable Camouflage Helmet Cover (Extra-Large)	3-93
3-18.	Removable Camouflage Helmet Cover (Extra-Large Wide)	3-97
3-19.	Lens Pad/Helmet Mounting Block Template	3-101
3-20.	Battery Securing Patch Template	3-102
3-21.	HGU-84/P Helmet Assembly Components	3-104
3-22.	HGU-67/P Helmet Assembly Components	3-106
3-23.	Helmet Assembly, HGU-84/P	3-108
3-24.	Helmet Shell Assembly	3-110
3-25.	Earcup Assembly	3-113
3-26.	Integrated Chin/Nape Assembly	3-114
3-27.	Thermoplastic Liner (TPL) Assembly	3-116
3-28.	Quick Don Mount Assembly	3-117
3-29.	Deleted	
3-30.	Gunsight Wiring Harness Assembly	3-118
3-31.	Deleted	
3-32.	CBR Adapter Strap Assembly Fitting Kit	3-121
4-1.	Leakage Tester, TTU-551/E	4-33
4-2.	HGU-68(V)/P Helmet Assembly	4-56
4-3.	HGU-85(V)/P Helmet Assembly	4-60
4-4.	HGU-87(V)/P22P-16 Aircrew Protective Helmet	4-64
4-5.	HGU-89/P22P-16 Aircrew Protective Helmet	4-67
4-6.	PRU-55/P Helmet Shell Assembly	4-70
4-7.	Earcup Assembly	4-71
4-8.	PRU-53/P Chin/Nape Strap Assembly	4-72
4-9.	EEU-7/P Helmet Visor Assembly	4-73
4-10.	PRU-52/P Thermoplastic Liner (TPL) Assembly	4-75
5-1.	MBU-14(V)1/P Oxygen Mask Assembly	5-5
5-2.	MBU-15/P Oxygen Mask Assembly (S-3 Aircraft)	5-6
5-3.	MBU-16/P Oxygen Mask Assembly (AV-8 Series and F/A-18 Aircraft)	5-7
5-4.	MBU-17(V)1/P Oxygen Mask Assembly	5-8

LIST OF ILLUSTRATIONS (Cont)

Figure	Title	Page
5-5.	MBU-17(V)2/P Oxygen Mask Assembly	5-9
5-6.	MBU-17(V)5/P Oxygen Mask Assembly (E-2C Aircraft)	5-10
5-7.	Cross Sectional View of a Combination Inhalation/Exhalation Valve	5-11
5-8.	Cross Sectional View of Valve During Inhalation	5-12
5-9.	Cross Sectional View of Valve During Exhalation	5-12
5-10.	Assembly of Hoses to the CRU-79/P Series Regulator	5-29
5-11.	Deleted	
5-12.	Assembly of Hoses, Regulator, and Straight Flared Adapter (P/N 1643340-1)	5-31
5-13.	Assembly of Regulator (P/N 326005-0401), Hose, and Modified 90 Degree Elbow Adapter (P/N 1654461-1)	5-32
5-14.	MBU-12/P Pressure Demand Oxygen Mask Assembly	5-50
5-15.	Oxygen Mask Storage Bag Pattern	5-55
5-16.	MBU-14(V)1/P Pressure Demand Oxygen Mask Assembly	5-59
5-17.	MBU-15/P Pressure Demand Oxygen Mask Assembly	5-61
5-18.	MBU-16/P Pressure Demand Oxygen Mask Assembly	5-63
5-19.	MBU-17(V)1/P Pressure Demand Oxygen Mask Assembly	5-65
5-20.	MBU-17(V)2/P Pressure Demand Oxygen Mask Assembly	5-67
5-21.	MBU-17(V)5/P Pressure Demand Oxygen Mask Assembly	5-69
5-22.	MBU-12/P Pressure Demand Oxygen Mask Assembly	5-71
6-1.	MBU-23(V)1/P Basic Oxygen Mask Assembly	6-2
6-2.	MBU-23(V)2/P Oxygen Mask Assembly	6-6
6-3.	MBU-23(V)3/P Oxygen Mask Assembly	6-7
6-4.	MBU-23(V)4/P Oxygen Mask Assembly	6-8
6-5.	MBU-23(V)5/P Oxygen Mask Assembly	6-9
6-6.	MBU-23(V)6/P Oxygen Mask Assembly	6-10
6-7.	MBU-23(V)7/P Oxygen Mask Assembly	6-11
6-8.	Face Measurement	6-13
6-9.	Positioning Bayonet Receivers	6-19
6-10.	Assembly of Hoses to the CRU-79/P Series Regulator	6-28
6-11.	Deleted	
6-12.	Deleted	
6-13.	Deleted	
6-14.	Cleaning Inhalation/Exhalation Valves	6-34
6-15.	Tiedown Strap Removal	6-35
6-16.	Fabrication of Spanner Wrench	6-40
6-17.	MBU-23(V)2/P Oxygen Mask Assembly Components	6-41
6-18.	MBU-23(V)3/P Oxygen Mask Assembly Components	6-43
6-19.	MBU-23(V)4/P Oxygen Mask Assembly Components	6-45
6-20.	MBU-23(V)5/P Oxygen Mask Assembly Components	6-47
6-21.	MBU-23(V)6/P Oxygen Mask Assembly Components	6-49
6-22.	MBU-23(V)7/P Oxygen Mask Assembly Components	6-51
6-23.	MBU-23(V)1/P Basic Oxygen Mask Assembly Components	6-53
6-24.	MBU-24/P22P-16 Enhanced Pressure - Demand Oxygen Mask Assembly	6-58
6-25.	MBU-24/P22P-16 Oxygen Mask Strain Relief Cord Installation	6-60
6-26.	MBU-24/P22P-16 Oxygen Mask Assembly	6-68
7-1.	HGU-24/P Helmet Assembly	7-3
7-2.	HGU-25(V)2/P Helmet Assembly	7-4
7-3.	Cloth Helmet Assembly	7-16

LIST OF TABLES

Table	Title	Page
2-1.	Source, Maintenance, and Recoverability (SM&R) Code Definitions	2-5
3-1.	Helmet Configuration Matrix	3-3
3-1A.	Helmet, Mask, and Visor Interface Chart	3-4A
3-2.	Helmet Application Matrix	3-8
3-3.	Helmet Sizing Guide	3-9
3-4.	Assembly of Components	3-10
3-5.	Maximum Heating Time per Number of Layers	3-36
3-6.	Helmet Sight Assembly Test and Boresight Adjustment	3-39
3-7.	Repairs/Fabrications/Replacements	3-43
3-8.	Repairs/Fabrications/Replacements (HGU-84/P Only)	3-44
3-9.	Order of Disassembly for Replacement of Helmet Shell Assembly	3-76
3-10.	Order of Assembly for Replacement of Helmet Shell Assembly	3-76
4-1.	Helmet Configuration Matrix	4-2
4-2.	Helmet Application Matrix	4-3
4-2A.	Helmet, Mask and Visor Interface Chart Tracked Visors (MBU-12/P Trim)	4-4
4-2B.	Helmet, Mask and Visor Interface Chart Lightweight (Bungy) Visors (MBU-12/P Trim)	4-4
4-2C.	Helmet, Mask and Visor Interface Chart Tracked Visors (MBU-23/P-24/P22P-16 Trim)	4-4A
4-2D.	Helmet, Mask and Visor Interface Chart Lightweight (Bungy) Visors (MBU-23/P-24/P22P-16 Trim)	4-4A
4-3.	PRU-55/P and PRU-58/P Helmet Shell Assembly Sizing Guide	4-6
4-4.	HGU-68(V)/P Assembly of Components	4-7
4-5	HGU-85(V)/P Assembly of Components	4-7
4-6.	HGU-87(V)/P22P-16 Assembly of Components	4-8
4-7.	HGU-89(V)/P22P-16 Assembly of Components	4-8
4-8.	Maximum Heating Time per Number of Layers	4-25
4-9.	Repairs/Fabrications/Replacements	4-36
5-1.	Oxygen Mask Configuration Matrix	5-3
5-2.	Oxygen Mask Application Matrix	5-4
5-3.	Special Tools	5-13
5-4.	MBU-14(V)1/P Assembly of Components	5-18
5-5.	MBU-15/P Assembly of Components	5-18
5-6.	MBU-16/P Assembly of Components	5-18
5-7.	MBU-17(V)1/P Assembly of Components	5-19
5-8.	MBU-17(V)2/P Assembly of Components	5-19
5-9.	MBU-17(V)5/P Assembly of Components	5-19
5-9A.	MBU-17(V)6/P Assembly of Components	5-19
5-9B.	MBU-17(V)8/P Assembly of Components	5-19
5-10.	Oxygen Mask Assembly Directives	5-33
5-11.	Repairs/Fabrications/Installations	5-35
5-12.	Troubleshooting	5-36

LIST OF TABLES (Cont)

Table	Title	Page
6-1.	Oxygen Mask Configuration Matrix	6-3
6-2.	Oxygen Mask Application Matrix	6-4
6-3.	MBU-23(V)/P Series Oxygen Mask Assembly Directives	6-5
6-4.	Installation of Components	6-18
6-5.	MBU-24/P22P-16 Oxygen Mask Assembly Directives	6-57
6-6.	Troubleshooting MBU-24/P22P-16 Oxygen Mask	6-61
7-1.	Major Components for HGU-24/P and HGU-25(V)2/P	7-2
7-2	Cloth Helmet Assembly Sizing Guide	7-5
7-3.	HGU-24/P and HGU-25(V)2/P Helmet Assembly Directives	7-10
7-4.	Repairs/Replacements	7-12

THIS PAGE INTENTIONALLY LEFT BLANK.

CHAPTER 1

INTRODUCTION

1-1. GENERAL.

WARNING

Unauthorized modification to, and deviations from, prescribed life support and survival equipment by individual crewmen could create unknown safety hazards. The OPNAVINST 3710.7 Series specifies minimum requirements for such equipment and is supplemented by the individual model NATOPS.

1-2. The OPNAVINST 4790.2 Series identifies NAVAIRSYSCOM as the only authority for modification to life support and survival equipment, which is usually accomplished by the Fleet Support Team (FST) (formerly Cognizant Field Activity (CFA)) via Aircrew System Changes or a change to the equipment procurement package. This manual also permits an operating activity, with approval of the controlling custodian, to conditionally modify ONE unit of equipment in-service in order to correct or overcome unsatisfactory conditions in that equipment item. Any other type of deviation, peculiar configuration, or modification to life support and survival equipment is not allowed, and Aircrew Survival Equipmentmen have no authority or responsibility to perform them.

1-3. If an omission or conflict should occur between FST documents and NATOPS requirements, if there is a need for clarification of equipment configuration, or if equipment deficiencies are discovered, the applicable FST should be notified. The FST for Aircrew Personal Protective Equipment is Naval Air Warfare Center Aircraft Division (NAWCAD) Code 4.6.2.2, NAS Patuxent River, MD, 20670-1906. For parachutes and related hardware, including torso harnesses, the FST is the Naval Air Warfare Center Weapons Division, Code 463000D, China Lake, CA, 93555.

1-4. NAWCAD DET, Indianapolis, IN 46219, has cognizance over all survival radios and emergency beacons.

1-5. The Aviation-Crew Systems manual is released under the authority of the Naval Air Systems Command in compliance with the request of the Chief of Naval Operations. The instructions contained herein are mandatory. This manual consists of separately bound volumes, as listed below:

TITLE	PUBLICATION NUMBER
Inflatable Survival Equipment (Liferafts)	NAVAIR 13-1-6.1-1
Inflatable Survival Equipment (Life Preservers)	NAVAIR 13-1-6.1-2
Parachutes	NAVAIR 13-1-6.2
Seat Survival Kits (Oxygen Hoses and Non-SKU Seat Kits)	NAVAIR 13-1-6.3-1
Seat Survival Kits (SKU Series Seat Kits)	NAVAIR 13-1-6.3-2
Oxygen Equipment (Aircraft Equipment, Masks, and Other Systems)	NAVAIR 13-1-6.4-1
Oxygen Equipment (Regulators)	NAVAIR 13-1-6.4-2
Oxygen Equipment (Concentrators)	NAVAIR 13-1-6.4-3
Oxygen Equipment (Converters)	NAVAIR 13-1-6.4-4
Rescue and Survival Equipment	NAVAIR 13-1-6.5
Aircrew Personal Protective Equipment (Aircrew/Passenger Equipment)	NAVAIR 13-1-6.7-1
Aircrew Personal Protective Equipment (Clothing)	NAVAIR 13-1-6.7-2
Aircrew Personal Protective Equipment (Helmets and Masks)	NAVAIR 13-1-6.7-3
Aircrew Personal Protective Equipment (Protective Assembly, Aircrew Survival - Armor)	NAVAIR 13-1-6.7-4
Special Mission Aircrew Equipment	NAVAIR 13-1-6.10

1-6. The purpose of this volume is to provide technical information related to the configuration, application, function, inspection, and maintenance of a particular category of aircrew safety and survival equipment. The information contained in each volume is intended for Organizational, Intermediate, and Depot Levels of maintenance as established within the Naval Aviation Maintenance Program (OPNAVINST 4790.2 Series).

1-7. DESCRIPTION OF NAVAIR 13-1-6.7-3.

1-8. CONTENTS. This volume contains information on configuration, application, function, inspection, and maintenance of Helmets and Masks.

1-9. CONFLICTS AND SUPERSEDURES. This volume shall take precedence over all other documents except for effective related Aircrew System Bulletins and Changes, and Interim Aircrew System Bulletins and Changes. These documents are effective until officially rescinded, canceled, or superseded.

1-10. The modifications section of each chapter lists all effective changes which affect Aircrew Personal Protective Equipment and have been issued on or before the date of latest change or revision to this volume. When applicable, the subject matter of these documents has been incorporated within the text of the appropriate chapters.

1-11. Effective changes and bulletins which effect Aircrew Personal Protective Equipment and are issued between changes and revisions to this volume should be recorded in the modification section of the manual for the affected equipment by annotating the outer margin of the page with a vertical line and the number of the change or bulletin. A copy of the change or bulletin should be filed in a separate binder in the ALSS work center. When this volume is updated these documents will be listed in the modification sections of the applicable chapters and the text of the chapters will be updated to reflect the changes and bulletins.

1-12. UPDATING. These volumes will be updated periodically by the issuance of a revision, which is a 100 percent replacement of pages. Between revisions, changes and rapid action changes will be released, which are partial replacement of pages. All added and changed pages shall be incorporated in these volumes according to page number. Superseded and deleted pages shall be discarded in accordance with the local security procedures for data containing distribution statements. A list of effective pages is provided with each change. A summary of the major changed areas for a particular change or revision is located directly beneath the list of effective pages.

1-13. COMMENTS AND RECOMMENDATIONS. Comments and recommendations shall be submitted using established deficiency reporting systems in accordance with OPNAVINST 4790.2 Series.

1-14. ENGINEERING DRAWINGS. Government engineering drawings are available to the fleet by submitting a letter of request to Commanding Officer, Naval Air Technical Data and Engineering Service Command, Naval Air Station North Island, P.O. Box 357031, Building 90 Distribution, San Diego, CA 92135-7031. Each request should include the equipment nomenclature, part number, and CAGE code. The drawings will be provided in the form of aperture cards (Automatic Data Processing Punch Cards). Technical data may also be obtained online at the NATEC website located at http://www.natec.navy.mil. Authorized users must first establish an account prior to obtaining data. Access/account information can be obtained at the NATEC website.

1-15. TECHNICAL DIRECTIVES AND FORMS. NATEC is the central management activity for aeronautical technical publications, engineering drawings and associated technical services. Upon release, NATEC will forward to all designated activities, copies of Technical Directives and Forms. Additional copies are available utilizing the procedures shown in paragraph 1-14 as well as from the PMA-202 website at https://pma202.navair.navy.mil.

1-16. QUALITY ASSURANCE. Quality assurance steps are provided for critical operations. When a step is underlined, the Aircrew Survival Equipmentman shall perform the operation and then have performance verified by a Collateral Duty Inspection (CDI-CDQAR-QAR) as established within the Naval Aviation Maintenance Program (OPNAVINST 4790.2 Series) prior to proceeding to the next operation. In no case shall an Aircrew Survival Equipmentman perform his/her own quality assurance inspection.

1-17. LEVELS OF MAINTENANCE.

1-18. Maintenance, inspection, repair, and overhaul shall be performed at the established level of maintenance in accordance with and as defined in OPNAVINST 4790.2 Series. In cases of necessity, such as at

very small activities, Organizational and Intermediate Levels may be combined within local capabilities. It is recognized that, due to conditions other than those assumed here, minor deviations to procedures outlined in this manual may be unavoidable. Prior to forwarding to a depot facility, it shall be definitely determined that maintenance cannot be performed at a lower level.

1-19. SUPPLEMENTARY PUBLICATIONS.

1-20. In addition to Interim Aircrew System Bulletins and Changes, and Aircrew System Bulletins and Changes which are still in effect, the following publications supplement this volume.

1. NAVAIR 00-35QH-2, Allowance List, Aviation Life Support System and Airborne Operation Equipment for Aircraft Squadrons Navy and Marine Corps.

2. OPNAV INSTRUCTION 4790.2 (Series). The Naval Aviation Maintenance Program.

3. NAVSUP Manual, paragraph 25841, Flight Clothing and Operational Equipment, provides instruction for issue of clothing and equipment to designated personnel.

4. OPNAVINST 4410.2A.

5. OPNAV INSTRUCTION 3710.7 provides general instructions on required minimums for Aircrew Personal Protective Equipment.

6. NATOPS MANUALS provide information on required Aircrew Personal Protective Equipment.

7. NAVSUP PUBLICATION 2002 lists directives and manuals available.

8. NAVAIR 13-1-6-8 Work Unit Code Manual lists work unit codes assigned to survival equipment.

9. NAVSUPINST 4423.29 (Series). Naval Material Command (NMC) Uniform Source, Maintenance and Recoverability (SM&R) Codes.

10. NAVAIR 01-1A-509 Cleaning and Corrosion Control Manual.

11. ASTM-D-6193 Standard Practice for Stitches and Seams.

12. P2300, Repairable Assemblies (lists repairable assemblies and applicability of Navy aviation materials).

13. P2310, Supporting Repair Parts (lists supporting parts of Navy aviation materials).

14. NAVAIR 17-15BC-22, Operation and Intermediate Maintenance for Oxygen Hose and Communications Test Set, TTU-489/E.

15. NAVAIR 00-80T-105

16. NAVSUPINST 4423.29 Series. Naval Material Command (NMC) Uniform Source, Maintenance, and Recoverability (SM&R) Codes.

17. NAVSUP P-719 is a Guide for the Assignment and Use of Source, Maintenance and Recoverability (SM&R) Codes.

THIS PAGE INTENTIONALLY LEFT BLANK.

CHAPTER 2

MAINTENANCE CONCEPTS, SCHEDULING AND DOCUMENTATION

Section 2-1. Maintenance Concepts

2-1. GENERAL.

2-2. NAVAL AVIATION MAINTENANCE PROGRAM. All maintenance and inspection actions upon Aviation Life Support Systems (ALSS) equipment shall be made as part of the Naval Aviation Maintenance Program in accordance with OPNAVINST 4790.2 Series.

2-3. LEVELS OF MAINTENANCE. Maintenance of ALSS equipment shall be performed at the established level of maintenance in accordance with OPNAVINST 4790.2 Series.

2-4. QUALIFIED PERSONNEL. Refer to OPNAVINST 4790.2 Series for qualifications of personnel authorized to perform maintenance actions on ALSS equipment.

Section 2-2. Maintenance Scheduling

2-5. GENERAL.

2-6. INSPECTION CYCLES. Scheduled maintenance requirements for aircraft and man-mounted equipment are published in the applicable aircraft maintenance requirement cards and this manual.

NOTE

To meet unusual situations and facilitate workload scheduling, refer to OPNAVINST 4790.2 Series for authorized deviations to scheduled phase inspection intervals.

Section 2-2A. Accident Evaluation

2-6A. AIRCRAFT ACCIDENT REPORT INSPECTION.

2-6B. Any Aviation Life Support System Equipment along with related subassemblies or equipment which have been recovered following use in an emergency ditching/bailout or ejection (refer to NAVAIR 13-1-6.2 for personnel and drogue parachutes) will be returned to the nearest Naval Supply Activity for shipment via traceable means to: Code 4.6.3.3, Naval Air Warfare Center Aircraft Division, Bldg 2187, 48110 Shaw Rd., Unit 5, Patuxent River, MD 20670-1906.

NOTE

Under no circumstances will any piece of Aviation Life Support System equipment which has been subjected to ditching/bailout or ejection be returned to service.

2-6C. Stencil outside of container in 1-in. letters as follows: THIS EQUIPMENT HAS BEEN USED IN AN EMERGENCY. These items of equipment are required for evaluation and determination of design deficiency and to establish requirements for product improvement.

Section 2-3. Maintenance Documents

2-7. GENERAL.

2-8. DOCUMENTING MAINTENANCE ACTIONS. Upon completion of any maintenance action (e.g., inspections, repairs, modifications), appropriate entries shall be made on applicable maintenance records, in accordance with OPNAVINST 4790.2 Series. The entries by the Aircrew Survival Equipmentman shall provide a systematic record of equipment history and the documentation of all maintenance actions performed on the equipment.

2-9. MAINTENANCE DOCUMENTS. Refer to OPNAVINST 4790.2 Series for documents used to record history or to document maintenance actions or for additional information for completion of maintenance records. These records are designed to provide continuous configuration and inspection records throughout the service life of ALSS assemblies and their components.

Section 2-4. Illustrated Parts Breakdown Information

2-10. GENERAL.

2-11. This section explains the Illustrated Parts Breakdown (IPB) for ALSS equipment. The IPB can be found at the end of each chapter where applicable. The IPB should be used during maintenance when requisitioning and identifying parts.

2-12. SYMBOLS AND ABBREVIATIONS. Symbols and abbreviations used in the Illustrated Parts Breakdown are as follows:

Symbol	Definition
---*---	Closure (end) of attaching parts
#	Selected part, only one used
x	By (used in dimensions 12 in. x 6 in.)
&	And

Abbreviation	Definition
AR or A/R	As Required
CAGE	Commercial and Government Entity
COML	Commercially available
FIG, Fig	Figure
GAPL	Group Assembly Parts List
GFE	Government Furnished Equipment
IPB	Illustrated Parts Breakdown
L.H.	Left Hand
MAINT	Maintenance
NHA	Next Higher Assembly
No.	Number
RECOVER, RECY	Recoverability
REF	Reference
R.H.	Right Hand
SM&R	Source, Maintenance and Recoverability
Spec. Cont. Dwg. or SCD	Specification Control Drawing

2-13. GROUP ASSEMBLY PARTS LIST.

2-14. The Group Assembly Parts List (GAPL) contains illustrations and parts lists for each major assembly. These illustrations and accompanying lists show how the major assemblies are disassembled into subassemblies and detail parts. Each item illustrated is indexed for identification purposes. Each illustration is accompanied by a parts list providing a part number, description, and quantity for each item. The list is arranged in disassembly order. Through the use of a system of indentation, the relationship of the detail parts to the subassemblies and the relationship of the subassemblies to the main assembly is shown.

2-15. FIGURE AND INDEX NUMBER COLUMN. The figure and index number of each item shown on the corresponding illustration appears in the Figure and Index Number Column, with the exception of assemblies and subassemblies which are not illustrated in assembled form. In these cases, the assemblies or subassemblies are listed but not indexed. The component parts thereof are both listed and indexed.

2-16. PART NUMBER COLUMN. This column contains the contractor's drawing number, government standard number, vendor drawing number or identifies the part as being commercial hardware (COML). Government standard parts are listed using the applicable MS, AN, AF, NAS, MIL, NIIN, or JAN part number. Where the part number is controlled by a military specification, this specification number is listed in the Description Column.

2-17. DESCRIPTION COLUMN. This column lists the item name plus those modifiers necessary to identify the item. The description of a vendor-supplied item includes a five-digit number which identifies the manufacturer. This is the Commercial and Government Entity (CAGE) code. To correlate this CAGE code to the manufacturer's name, refer to the cataloging handbook H4/H8. CAGE codes may be omitted for prime manufacturer's parts and for government standard parts. When applicable, contractor's control drawing numbers and reference designations of electronic parts are also listed for general reference. When a separate exploded view is used to show the detail parts of an assembly or subassembly the Description Column contains an appropriate figure cross-reference in parenthesis following the description. This cross-reference appears both in the listing where the assembly is first described, and in the listing which the assembly is broken down. In the latter case, the abbreviation REF will appear in the Units Per Assembly column. Commercial hardware items (COML) are fully described so that they may be procured from normal commercial sources. Parts stocked in kits are identified with kit component code in this column, i.e., KD.

2-18. Indentation. The indentations headed "1" through "7" in the Description Column are provided to show the relationship of assemblies and their detail parts. The detail parts are indented one space to the right and listed below the assembly to which they belong. Determine the next higher assembly (NHA) of any detail part by locating, in the next space to the left (excluding attaching parts) the first item above the detailed part.

```
1 2 3 4 5 6 7

ARTICLE (or MAIN ASSEMBLY)
. Detailed parts for ARTICLE (or MAIN ASSEMBLY)
. ASSEMBLY
    (ATTACHING PARTS)
. ATTACHING PARTS FOR ASSEMBLY
    ---*---
. . Detailed parts for ASSEMBLY
. . SUBASSEMBLY
      (ATTACHING PARTS)
. . ATTACHING PARTS FOR SUBASSEMBLY
      ---*---
. . . Detailed Parts for SUBASSEMBLY
. . . SUB-SUBASSEMBLY
        (ATTACHING PARTS)
. . . ATTACHING PARTS FOR SUB-SUBASSEMBLY
        ---*---
. . . . Detailed parts for SUB-SUBASSEMBLY
```

2-19. Attaching Parts. Attaching parts are items used to attach parts or assemblies to each other and follow immediately after the part to be attached. The attaching parts have the same indentation as the part attached. The caption "(ATTACHING PARTS)" is placed on the line immediately above the listing of attaching parts. The separation symbol ---*--- appears on the line immediately under the last attaching part. Quantities of attaching parts are listed per unit. For example, if two fittings are required for each assembly and one bolt is required to attach each fitting, the correct listing would be:

```
. FITTING ASSEMBLY, Hinge ..................... 2
    (ATTACHING PARTS)
. BOLT ....................................... 1
    ---*---
```

2-20. UNITS PER ASSEMBLY COLUMN. This column shows the quantity of an item required in the next higher assembly. The abbreviation AR indicates when the quantity is "As Required".

2-21. USABLE ON CODE COLUMN. Usable on codes are used to indicate part usage where various models and serial numbers of the equipment or similar parts within the equipment use different parts. A code is assigned to each variation of the equipment and entered into the GAPL when a part is used only in a specified variation. Where no code is entered, the part is used on all units covered by the GAPL or when no variations from the original equipment exist.

2-22. NUMERICAL INDEX.

2-23. The numerical index follows the last GAPL in any chapter and contains all the part numbers listed in all GAPLs, arranged in alphabetical-numerical sequence.

2-24. PART NUMBER COLUMN. This column contains the part numbers of the parts and assemblies. Part number arrangement starts at the extreme left-hand position and continues left to right, one position at a time, according to the following order or precedence:

Space	(blank column)
Diagonal	(Slant)
Point	(period)
Dash	(hyphen)
Letters	A through Z
Numerals	0 through 9

NOTE

Spaces, diagonals, points, and dashes do not appear in the extreme left-hand position of the part numbers. However, they may be used in the second and succeeding positions and take precedence over letters and numbers as indicated above.

2-25. FIGURE AND INDEX NUMBER COLUMN. In this column, the digits preceding the dash refer to the figure in which the parts are illustrated. The digits following the dash are the index numbers.

2-26. SOURCE, MAINTENANCE AND RECOVERABILITY (SM&R) CODE COLUMN. The five digit SM&R codes, assigned by Naval Air Systems Command Representatives are reflected in the SM&R code column. The code format is composed of three parts consisting of a two-position Source Code, a two-position Maintenance Code and a one-position Recoverability Code. See table 2-1 for basic information.

NOTE

For more complete information on Uniform SM&R Codes, refer to NAVSUPINST 4423.29, OPNAVINST 4410.2A, and NAVSUP P-719.

Table 2-1. Source, Maintenance, and Recoverability (SM&R) Code Definitions

SOURCE			MAINTENANCE			
1st POS	2nd POSITION		3rd POSITION		4th POSITION	
MEANS OF ACQUIRING SUPPORT			USE: LOWEST LEVEL AUTHORIZED TO REMOVE/ REPLACE THE ITEM.		REPAIR: LOWEST LEVEL WITH CAPABILITY AND RESOURCES TO PERFORM COMPLETE REPAIR ACTION.	
P	A	ITEM: STOCKED	O	ORG/UNIT	O	ORG/UNIT
	B	ITEM: STOCKED, INSURANCE				
	C	ITEM: STOCKED, DETERIORATIVE				
	D	ITEM: SUPPORT, INITIAL ISSUE OF OUTFITTING & STOCK ONLY FOR ADDITIONAL INITIAL ISSUE	2 3 4 5 6	MINESWEEPER SUBMARINES AUX/AMPHIB DESTROYER, FFG CRUISER/CARRIER	2 3 4 5 6	MINESWEEPER SUBMARINES AUX/AMPHIB DESTROYER, FFG CRUISER/CARRIER
	E	EQUIPMENT: SUPPORT, STOCKED FOR INITIAL ISSUE OR OUTFITTING OF SPECIFIED MAINTENANCE ACTIVITIES				
	F	EQUIPMENT: SUPPORT, NONSTOCKED, CENTRALLY PROCURED ON DEMAND	F	I/AFLOAT	F	I/AFLOAT
	G	ITEM: STOCKED FOR SUSTAINED SUPPORT. UNECONOMICAL TO PRODUCE AT A LATER TIME				
	H	ITEM: STOCKED, CONTAINS HAZMAT. HMIS/MSDS REPORTING REQUIRED	G	ASHORE AND AFLOAT	G	ASHORE AND AFLOAT
	R	TERMINAL OR OBSOLETE, REPLACED				
	Z	TERMINAL OR OBSOLETE, NOT REPLACED				
K	D	ITEM: DEPOT O/H & MAINTENANCE KITS	H	I/ASHORE	H	I/ASHORE
	F	ITEM: MAINTENANCE KIT, PLACE AT O, F, H, L				
	B	ITEM: IN BOTH DEPOT REPAIR AND MAINT. KITS				
M	O	MFR OR FAB AT UNIT LEVEL				
	F	MFR OR FAB AT INTERMEDIATE/DS LEVEL	K	CONTRACTOR FACILITY	K	CONTRACTOR FACILITY
	H	MFR OR FAB AT INTERMEDIATE/GS LEVEL				
	L	MFR OR FAB AT SPECIALIZED REPAIR ACTIVITY (SRA)				
	G	MFR OR FAB AT ASSEMBLED AFLOAT OR ASHORE				
	D	MFR OR FAB AT DEPOT MAINTENANCE LEVEL	L	INTERMEDIATE SRA	L	INTERMEDIATE SRA
A	O	ITEM: ASSEMBLED AT ORG/UNIT				
	F	ITEM: ASSEMBLED AT INTERMEDIATE LEVEL - AFLOAT				
	H	ITEM: ASSEMBLED AT INTERMEDIATE LEVEL - ASHORE	D	DEPOT	D	DEPOT
	L	ITEM: ASSEMBLED AT SRA				
	G	ITEM: ASSEMBLED AFLOAT OR ASHORE				
	D	ITEM: ASSEMBLED AT DEPOT MAINTENANCE LEVEL				
X	A	ITEM: REQUISITION NEXT HIGHER ASSEMBLY			Z	NON-REPAIRABLE
	B	ITEM: NOT PROCURED OR STOCKED, AVAILABLE THRU SALVAGE, REQ. BY CAGE/PART NUMBER	Z	REF ONLY		
	C	INSTALLATION DRAWING, DIAGRAM, INSTRUCTION SHEET, IDENTIFY BY CAGE/PART NUMBER			B	RECONDITION
	D	NON-STOCKED, OBTAIN VIA LOCAL PURCHASE				

RECOVERABILITY		SERVICE OPTION CODE	
5th POSITION		6th POSITION	
DISPOSITION: WHEN UNSERVICEABLE OR UNECONOMICALLY REPAIRABLE, CONDEMN OR DISPOSE.		ASSIGNED TO SUPPORT ITEMS TO CONVEY SPECIFIC INFORMATION TO THE SERVICE'S LOGISTICS COMMUNITY/OPERATING FORCES.	
O	ORG/UNIT	1	I-LEVEL 1ST DEGREE
F	I/AFLOAT	2	I-LEVEL 2ND DEGREE
G	ASHORE AND AFLOAT	3	I-LEVEL 3RD DEGREE
H	I/ASHORE	6	COMMERCIAL ITEM, ORGANICALLY MFR'D
K	DLR; CONTRACTOR FACILITY	8	NON-CONSUMABLE; 2ND DEGREE ENGINE I-LEVEL
		9	NON-CONSUMABLE; 3RD DEGREE ENGINE I-LEVEL
L	INTERMEDIATE SRA LEVEL	E	END TO END TEST
		J	INTER-SERVICE DLR REPAIRABLE BELOW D-LEVEL
D	DLR; CONDEMN OR DISPOSE AT DEPOT	P	PROGRESSIVE MAINTENANCE
Z	NON-REPAIRABLE	R	GOLD DISC REPAIR
A	NON-REPAIRABLE BUT REQUIRES SPECIAL HANDLING	T	TRAINING DEVICES

THIS PAGE INTENTIONALLY LEFT BLANK.

CHAPTER 3

AIRCREW HELMET ASSEMBLIES FOR ROTARY WING AIRCRAFT

Section 3-1. Description

3-1. GENERAL.

3-2. The HGU-84/P Series aircrew helmet assemblies feature a lightweight helmet shell constructed of a multi-layer mixed composite of graphite fabric and ballistic nylon fabric with the helmet edge trimmed for optimal peripheral vision. The helmets are available in four sizes (medium, large, extra-large, and extra-large wide). They afford enhanced stability and comfort through the use of an integrated chin/nape strap and a thermoplastic comfort liner. The helmets provide face and eye, ear, and head protection when assembled and properly fitted to the aircrewmember. They are compatible for use with the AN/AVS-9(R) Night Vision Image Intensifier Set (NVIIS), the MCK-3A/P CBR protective mask, and the MBU-17(V)2/P oxygen mask. The helmets also house the communications components; H-87B/U earphones, radio frequency (communications) cable assembly and feature a boom swivel mount for installation of the M-87/AIC or M26542/2 Series boom microphones. The visor assemblies authorized for use with this helmet series are the Neutral, Clear, Gradient, Amber and Laser Eye Protective or Neodymium. These visors are easily attached or removed via snap fasteners. In addition to the features described above, the HGU-67/P, using the basic HGU-84/P helmet as a baseline, incorporates an internal wiring harness for use as an interface connection, through a helmet mounted receptacle, to the AH-1 aircraft installed gunsighting system.

3-3. CONFIGURATION.

3-4. The basic HGU-84/P helmet assembly is shown in figure 3-1. Communications components and NVIIS interface accessories are not included as part of the basic helmet assembly and must be procured separately and installed on the helmet to build up the configurations listed in table 3-1. The HGU-67/P helmet assembly, based on the basic HGU-84/P, has been assigned a unique nomenclature to identify it as an AH-1 aircraft specific configuration. In order to obtain the desired configuration for aircrew, assigned to fly in certain aircraft, refer to tables 3-1 and 3-2.

3-5. MAJOR HELMET COMPONENTS. The following paragraphs contain a brief description of each of the major helmet assembly components. Additionally a brief description of separately procured configuration components and accessories is included. These components and accessories are added to the basic HGU-84/P helmet assembly to achieve a desired configuration. Refer to table 3-2 for component and accessory application. See figures 3-21 through 3-32 for IPB.

3-6. Helmet Shell Assembly. The helmet shell assembly (figure 3-2) is designed to provide impact protection. This assembly consists of a helmet shell (constructed of pressure-molded, laminated graphite and ballistic nylon) and a polystyrene energy-absorbing liner (which absorbs and reduces impact forces). Also included are a lens pad (which buffers the visors from shell), a boom swivel assembly (which supports a boom/microphone assembly), snap fasteners (to which the visors are attached), and a helmet block for mounting either a Night Vision Image Intensifier Set (NVIIS) or a Helmet Sight Assembly (HSA) (HGU-67/P). Pile fastener is attached to the inside of the helmet shell for proper positioning and retention of earcups. A foam edgeroll encased in black leather covers the edge of the helmet shell.

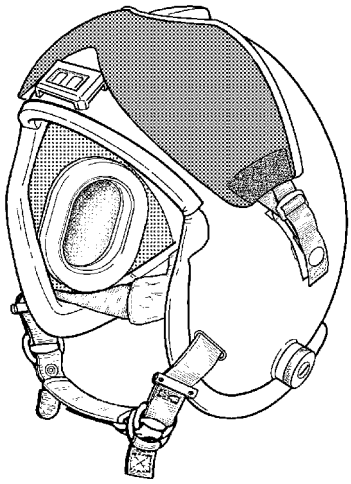

3-1

Figure 3-1. HGU-84/P Helmet Assembly

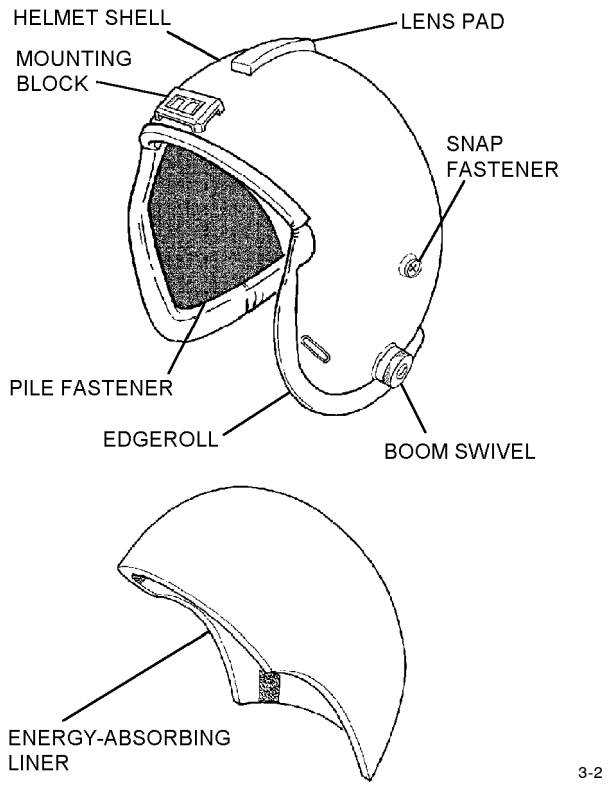

Figure 3-2. Helmet Shell Assembly Components

3-7. PRU-52/P Thermoplastic Liner (TPL) Assembly. The TPL assembly (figure 3-3) is a light weight inner liner which provides comfort and a close fit. The TPL assembly consists of a five-layer, preformed plastic assembly and a removable, washable cloth cover. The TPL may be fitted by removing layers from the plastic assembly or custom fitted by heating and forming to the aircrewmember's head.

3-8. Earcup Assemblies. The right and left earcup assemblies (figure 3-4) provide sound attenuation and are compatible with H-87B/U earphones. These assemblies are attached to the inside of the helmet shell by hook and pile fastener. Each earcup is tapered, with the deeper portion positioned to the top. A raised-ring earseal on each earcup is designed to ensure comfort and sound attenuation. Earcup fitting pads (two thick and two thin) can be placed between the earcup and helmet shell for optimum earcup fit. The pads can be cut to any size or shape.

3-9. Integrated Chin/Nape Assembly. The integrated chin/nape assembly (figure 3-5) is adjusted via the chin strap, which simultaneously adjusts the cross straps in the nape area. This provides a snug, comfortable fit with maximum helmet stability and retention. Sliding clamps on the nape straps allow adjustment of the nape area without added force to the chin strap. The nape straps are made of nylon webbing and feature a leather-covered nape pad for comfort. The pad extends over the energy-absorbing liner. Spacer pads can be added to the nape pad to increase snugness. Spacer pads of varying thicknesses, which are supplied, may be cut to any size necessary. The chin strap is made of nylon webbing reinforced with aramid tape on the inside. A snap tab on the left side of the chin strap allows for quick fastening and unfastening without the need for repeated lacing through the D-rings located on the right side. The chin strap features a chin pad with a nylon pile fastener tab. A hook fastener tab sewn onto the free end of the chin strap fastens to the pile tab to minimize slippage.

3-10. Clear, Neutral and Special Purpose Protective Visor Assemblies. Required eye protection is provided by the two supplied visor assemblies (Figure 3-6). The visors may be worn in either a single or dual visor configuration as desired by the crewmember. The clear inner visor provides eye protection during night flying operations. The neutral density outer visor, in addition to providing eye protection, also provides glare protection during daylight flight operations. Each visor is attached and removed via snap fasteners. The outer visor features pull-the-dot fasteners that have been installed to release in the direction opposite to the release direction of the inner visor, thereby avoiding the unintentional release of both visors during operation. A leather lens cover is provided to protect the outer visor and a lens pad rest on the top of the helmet protects the inner surface of the inner visor when not in use. Four additional special purpose outer visors are authorized for use with these helmets, but they must be procured separately. The Neodymium laser eye protective visor provides protection from laser targeting and range finding devices during both day and night flight operations. The amber visor affords enhanced visual acuity during flights conducted in overcast or haze. The gradient visor provides glare protection similar to the neutral visor, but the clear area along the lower portion allows for un-obscured rapid scan of cockpit instruments. The Safety Visor, Stepped-in provides eye protection during night flight operations and is worn under the AN/AVS-9(V)R NVIIS. The amber and gradient visors are for use during daylight flight operations only.

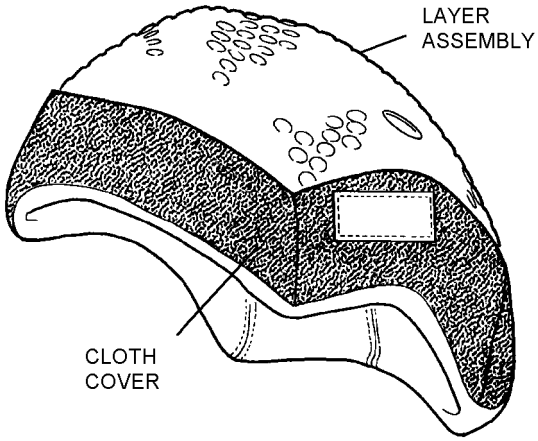

Figure 3-3. Thermoplastic Liner Assembly

Table 3-1. Helmet Configuration Matrix

HELMET DESIGNATION	SHELL	VISOR	LINERS		CABLES							EAR-PHONES			BOOM MICRO-PHONES					AMP	CBR	NVIIS	HSA	O_2 MASK		COVER
	PRU-59/P	CLEAR AND NEUTRAL VISORS (SEE NOTE 3 FOR OPTIONAL USE VISORS)	TPL PRU-52/P	OREGON AERO ZETALINER	M22442/15-1 (CX4832A/AR) OR M22442/19-1 (CX-12972/AR)	M22442/30-2 (CX-13164/A)	MIL-C-22442/30-1 (CX-13155/A)	M22442/37-4708 (CX-4708A/AIC)	M22442/57-1 (CX-13165/A)	MK-1564/AIC (TEMPEST) (NOTE 4)	P/N 93C8485 (NOTE 5)	H-87B/U	D6001601 (TEMPEST) PART OF MK-1564/AIC ASSEMBLY	COMMUNICATIONS EAR PLUG	M-33A/AIC (M-87 W/6″ CX-4434/U CABLE)	M26542/2-01 (M-87 W/13″ CX-4434/U CABLE)	M26542/2-02 (M-87 W/16″ CX-4434/U CABLE)	M26542/2-03 (M-87 W/28″ CX-4434/U CABLE)	D6001618 OR D6002568 (TEMPEST) PART OF MK-1564/AIC ASSEMBLY	M23595/1-2 (AM-3597C/A)	MCK-3A/P OR MBU-21/P MODIFICATION KIT	AN/AVS-9(R) INTEGRATION ASSEMBLY	HELMET SIGHT AND WIRING HARNESS ASSEMBLIES	MBU-23/P MODIFIED W/MBU-12P BAYONET REC. 93A8514	MBU-17/P MODIFIED W/MBU-12P BAYONET REC. 93A8514	CAMOUFLAGE, REMOVABLE
HGU-84/1P	X	X	X	O	X	O	O	O	O	–	O	X	–	O	O	X	O	O	O	X	AR	AR	–	–	–	AR
HGU-84/2P	X	X	X	O	X	O	O	O	O	–	O	X	–	O	–	X	O	–	–	–	AR	AR	–	–	–	AR
HGU-84/3P	X	X	X	O	X	O	O	O	O	–	O	X	–	O	–	X	O	–	–	–	AR	AR	–	O	X	AR
HGU-84/4P	X	X	X	O	X	O	O	O	O	–	O	X	–	O	–	X	–	O	–	X	AR	AR	–	–	–	AR
HGU-84/5P	X	X	X	O	X	O	O	O	O	–	O	X	–	O	–	X	–	O	–	–	AR	AR	–	AR	AR	AR
HGU-84/6P	X	X	X	O	O	O	O	O	O	–	O	X	–	O	–	X	–	–	–	X	AR	AR	–	–	–	AR
HGU-84/7P	X	X	X	O	O	O	O	O	X	–	O	X	–	O	–	X	O	O	–	O	AR	AR	–	–	–	AR
HGU-84/8P	X	X	X	O	–	O	O	O	O	X	O	O	X	O	–	–	–	–	X	–	AR	AR	–	O	X	AR

Table 3-1. Helmet Configuration Matrix (Cont)

HELMET DESIGNATION	SHELL	VISOR	LINERS		CABLES							EAR-PHONES			BOOM MICRO-PHONES					AMP	CBR	NVIIS	HSA	O_2 MASK		COVER
	PRU-59/P	CLEAR AND NEUTRAL VISORS (SEE NOTE 3 FOR OPTIONAL USE VISORS)	TPL PRU-52/P	OREGON AERO ZETALINER	M22442/15-1 (CX4832A/AR) OR M22442/19-1 (CX-12972/AR)	M22442/30-2 (CX-13164/A)	MIL-C-22442/30-1 (CX-13155/A)	M22442/37-4708 (CX-4708A/AIC)	M22442/57-1 (CX-13165/A)	MK-1564/AIC (TEMPEST) (NOTE 4)	P/N 93C8485 (NOTE 5)	H-87B/U	D6001601 (TEMPEST) PART OF MK-1564/AIC ASSEMBLY	COMMUNICATIONS EAR PLUG	M-33A/AIC (M-87 W/6″ CX-4434/U CABLE)	M26542/2-01 (M-87 W/13″ CX-4434/U CABLE)	M26542/2-02 (M-87 W/16″ CX-4434/U CABLE)	M26542/2-03 (M-87 W/28″ CX-4434/U CABLE)	D6001618 OR D6002568 (TEMPEST) PART OF MK-1564/AIC ASSEMBLY	M23595/1-2 (AM-3597C/A)	MCK-3A/P OR MBU-21/P MODIFICATION KIT	AN/AVS-9(R) INTEGRATION ASSEMBLY	HELMET SIGHT AND WIRING HARNESS ASSEMBLIES	MBU-23/P MODIFIED W/MBU-12P BAYONET REC. 93A8514	MBU-17/P MODIFIED W/MBU-12P BAYONET REC. 93A8514	CAMOUFLAGE, REMOVABLE
HGU-67/P	X	X	X	O	–	–	–	–	X	–	O	X	–	O	–	X	O	O	–	–	AR	AR	X	AR	AR	AR

Legend: X = Required; O = Alternate; AR = As Required; – = Not Applicable

Notes:

1. The M22442/19-1 (CX-12972/AR) Communication Cable is an authorized alternate for the M22442/28-1 (CX-13128/A) Communication Cable.
2. Fully operational helmet required separately issued Aviator's Night Vision Image Intensifier Set and battery pack.
3. See table 3-1A for optional visors for use with the HGU-84/P series and HGU-67/P helmets.
4. Cable P/N MK-1564/AIC is for installation on the HGU-84/8P helmet used in V-22 Series aircraft.
5. Cable P/N 93C8485 is used in the SH-60F due to unique aural requirement of aircraft systems.
6. KC-130 aircrew are authorized to use the Oregon Aero Hushkit Combos (P/N 28034 and 28118).

Table 3-1A. Helmet, Mask, and Visor Interface Chart

Mask Trim	Part Number	Lens Type
MBU-12/P	90D7914-1	Clear Inner Visor
	90D7915-1	Neutral Outer Visor
	95A9255-1	Amber Visor (Open Purchase)
	95A9255-2	Gradient Visor (Open Purchase)
	GW9653	Neodymium Laser Eye Protective (LEP) (Open Purchase)
	GW9651-01	Visor Assembly, Reduced Profile, Safety Stepped-in, Medium, (Open Purchase)
	GW9651-03	Visor Assembly, Reduced Profile, Safety Stepped-in, Large, (Open Purchase)
	GW9651-05	Visor Assembly, Reduced Profile, Safety Stepped-in, Extra-Large, (Open Purchase)
	GW9651-09	Neodymium Laser Eye Protective (LEP), Low Profile, Safety Stepped-In, Medium, (Open Purchase)
	GW9651-11	Neodymium Laser Eye Protective (LEP), Low Profile, Safety Stepped-In, Large, (Open Purchase)
	GW9651-13	Neodymium Laser Eye Protective (LEP), Low Profile, Safety Stepped-In, Extra-Large, (Open Purhase)
MBU-23/P	GW9652-01	Visor Assembly, Reduced Profile, Safety Stepped-in, Medium, (Open Purchase)
	GW9652-03	Visor Assembly, Reduced Profile, Safety Stepped-in, Large/Extra-Large, (Open Purchase)
	GW9652-05	Neodymium Laser Eye Protective (LEP), Low Profile, Safety Stepped-In, Medium, (Open Purchase)
	GW9652-07	Neodymium Laser Eye Protective (LEP), Low Profile, Safety Stepped-In, Large/Extra-Large, (Open Purchase)

Notes: 1. Special purpose visors with reference numbers beginning with GW, listed as open purchase, are commercially available from Gentex Western Operations, Rancho Cucamonga, CA., 91730 Telephone (909) 481-7667 (at menu prompt, choose USN MBU-23/P Order Desk). All other special purpose visors listed as open purchase are commercially available from Gentex Corporation, Carbondale PA, 18470 Telephone (570) 282-8505.

THIS PAGE INTENTIONALLY LEFT BLANK.

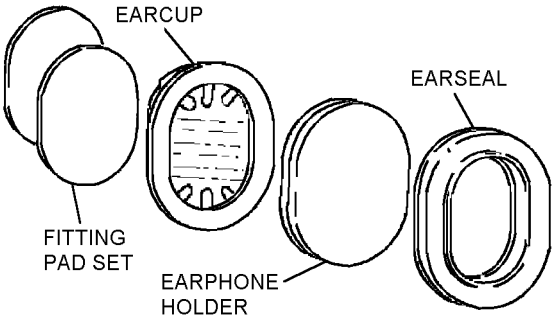

3-4

Figure 3-4. Earcup Assembly Components

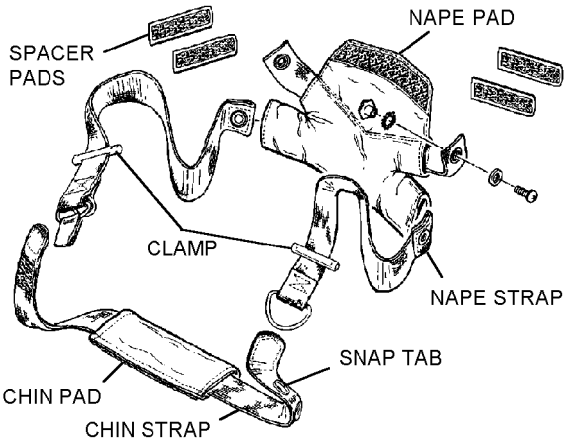

3-5

Figure 3-5. Integrated Chin/Nape Assembly Components

3-11. Communications System Components. Helmet communications system components must be procured separately. The helmet communications system illustrated (figure 3-7) represents components of a typical system consisting of two earphones, a communications cable or radio frequency cable, a boom microphone assembly, an audio amplifier and an amplifier mounting bracket kit.

3-12. NVIIS System Components. The NVIIS components (figure 3-8) must be procured separately. System components include the AN/AVS-9(R) Night Vision Image Intensifier Set (NVIIS), Battery Compartment P/N 300680-G2/G3 or Low Profile Battery Compartment P/N 268465, NVIIS Quick Don Mount Assembly (built-up from kit P/N 93B8601 and components removed from mount assembly P/N 5002530) and internal wiring harness P/N 3151AS135-1. Using the quick don mount assembly the AN/AVS-9(R) NVIIS easily attach to the installed helmet-mounting block on the brow of the helmet. The terminal block end of the internal NVIIS wiring harness, which when connected to the battery power compartment provides power to the NVIIS, contains gold plated electrical contacts and is secured to the left hand side of the helmet mounting block by a retainer that prevents incorrect installation. The wiring harness is routed through the inside of the helmet exiting at the rear of the helmet through a factory drilled exit hole where it connects to the power cable of the battery compartment. The battery compartment is secured to the rear of the helmet with a pile fastener tape battery compartment-securing patch, which must be fabricated.

3-13. Helmet Sight Assembly Components (HGU-67/P). The helmet sight assembly components (figure 3-9) must be procured separately. The HSA components include the quick don helmet gunsight mount assembly, gunsight wiring harness assembly with receptacle and the receptacle bracket assembly. The terminal block, of the internal portion of the gunsight wiring harness, features gold plated electrical contacts and is attached to the right hand side of the installed helmet mounting block with a retainer that prevents incorrect installation. The internal portion of the wiring harness is routed along the upper edge of the right helmet shell cavity pile fastener tape, under the leather covering of the helmet nape edgeroll across the rear of the helmet, exiting the interior at the left rear corner fold of the helmet nape edgeroll. At the molded cable strain relief point, the cable splits with one wire bundle routed to the A1P1 electrical connector and the other to the receptacle. The receptacle is attached to a receptacle bracket which is attached to the helmet crown. The receptacle bracket is positioned on the helmet shell exterior to allow proper connection to the aircraft mounted portion of the gunsight system.

3-14. CBR Receiver Components. The CBR receiver components (figure 3-10) include two snap fastener studs and two CBR adapter strap assemblies with snaps. The studs are permanently secured to the sides of the helmet. The adapter straps attach to the MCK-3/P CBR mask and are used to attach the mask to the helmet assembly. The two strap assemblies, two studs, and their attaching hardware are packaged together as a fitting kit. The MCK-3/P CBR mask is issued separately and must be fitted to individual aircrewmembers when the studs and strap assemblies are installed. Refer to NAVAIR 13-1-6.10 for fitting instructions.

3-15. SUPPORT EQUIPMENT.

3-16. TTU-489/E OXYGEN TEST SET. The Oxygen Test Set, P/N 1827AS100-1, is required to test transmit and receive communications capabilities of the helmet and oxygen mask. Refer to NAVAIR 17-15BC-22.

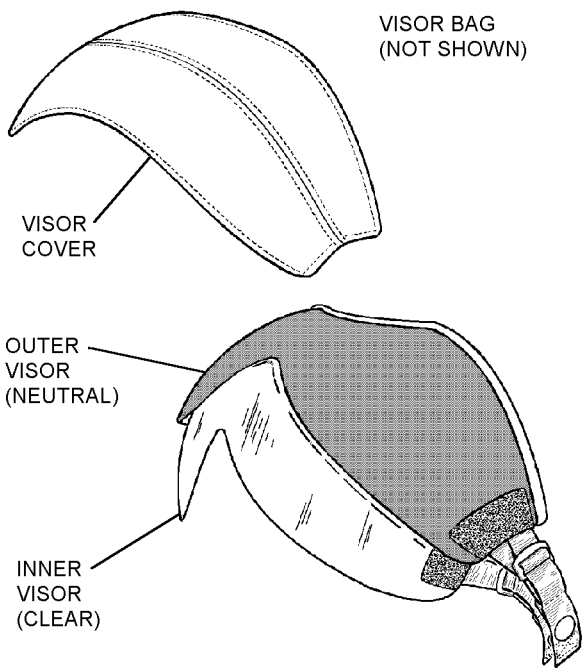

Figure 3-6. Visor Assemblies and Cover 3-6

3-17. HELMET SIGHT ALIGNMENT SET. The Helmet Sight Alignment Set, P/N 2278335-02, is required to perform boresight testing and adjustment on the HGU-67/P helmet sight system.

3-18. APPLICATION.

3-19. The HGU-67/P helmet assembly covered in this chapter is designed for use by aircrewmembers of all AH-1 Series Cobra rotary wing aircraft. The HGU-84/P helmet assemblies are designed for use by aircrewmembers of aircraft listed in table 3-2.

3-20. REFERENCE NUMBERS, ITEMS, AND SUPPLY DATA.

3-21. Section 3-6, Illustrated Parts Breakdown, contains information on each assembly, subassembly, and component part of these helmets. This information includes illustrations, part numbers, descriptions, and units per assembly. Source, Maintenance, and Recoverability (SM&R) codes are indicated in the Numerical Index following the Illustrated Parts Breakdown.

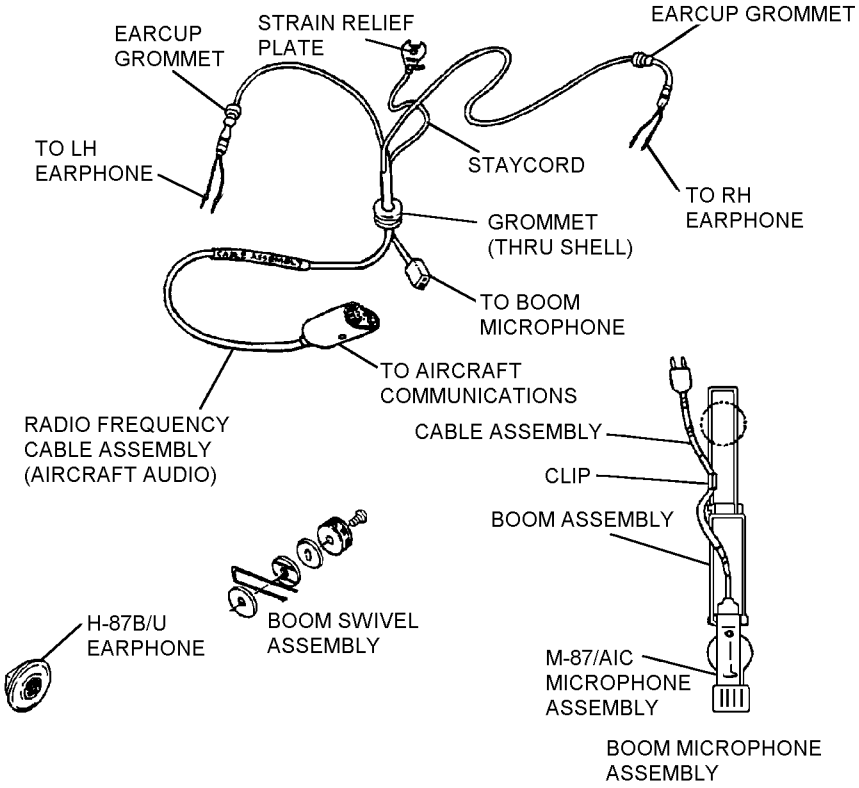

3-7

Figure 3-7. Communications System Components (HGU-67/P)

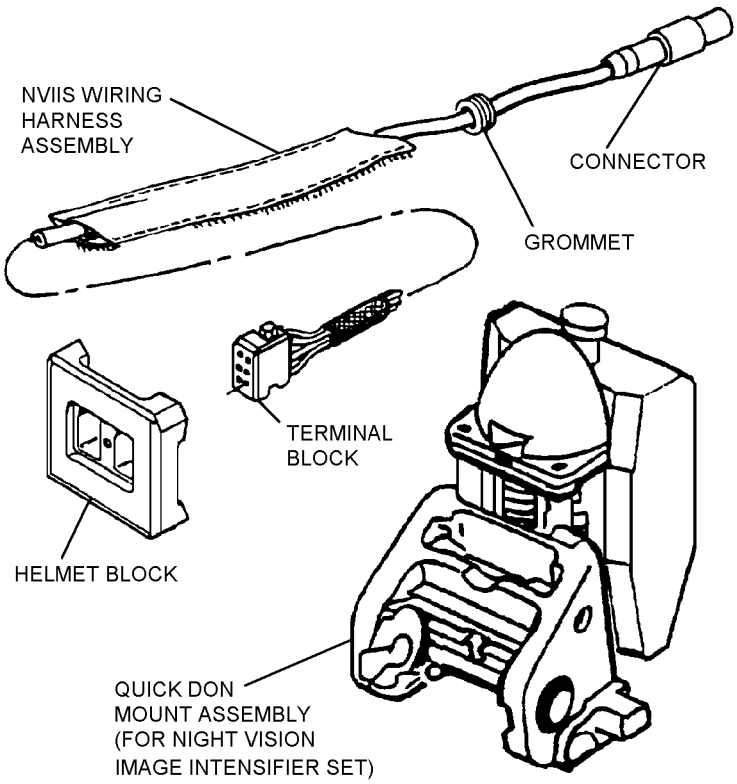

3-8

Figure 3-8. NVIIS Components

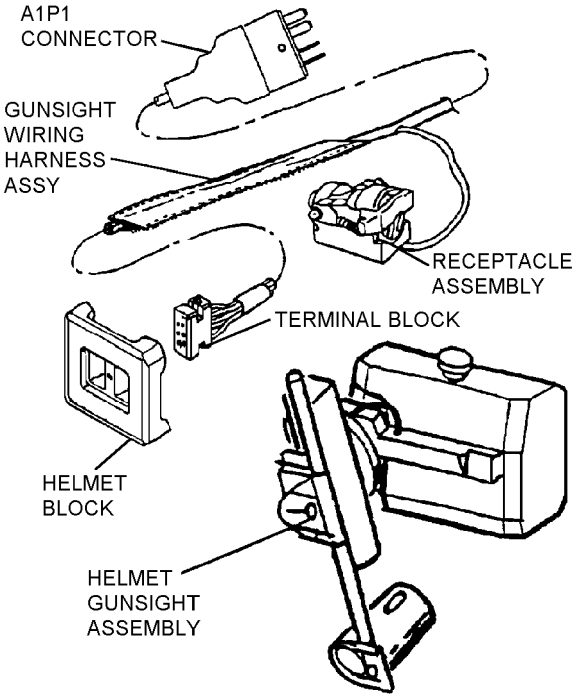

3-9

Figure 3-9. Helmet Sight Assembly Components (HGU-67/P)

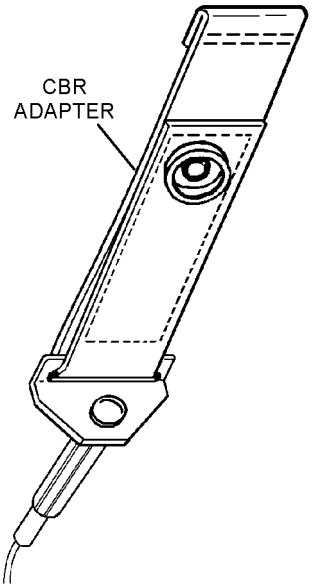

3-10

Figure 3-10. CBR Adapter Components

Table 3-2. Helmet Application Matrix

ROTARY-WING AIRCRAFT																		
HELMET DESIGNATION	AH-1 SERIES	UH-1N ALL STATIONS	SH-3D ALL STATIONS	SH-3H ALL STATIONS	VH-3A ALL STATIONS	V-22 ALL STATIONS	CH-46D ALL STATIONS	CH-46E ALL STATIONS	HH-46A ALL STATIONS	UH-46A ALL STATIONS	UH-46D ALL STATIONS	CH-53D PILOT & COPILOT	CH-53D CREW	CH-53E ALL STATIONS	MH-53E ALL STATIONS	RH-53D ALL STATIONS	TH-57 ALL STATIONS	SH-60 ALL STATIONS
HGU-67/P	X	–	–	–	–	–	–	–	–	–	–	–	–	–	–	–	–	–
HGU-84/1P	–	–	–	–	–	–	–	–	–	–	–	–	–	X	X	X	–	–
HGU-84/2P	–	X	–	–	–	–	–	–	–	–	–	–	–	–	–	–	X	–
HGU-84/3P	–	(1)	–	–	–	–	–	–	–	–	–	–	–	–	–	–	–	–
HGU-84/4P	–	–	–	–	–	–	–	–	–	–	–	–	X	–	–	–	–	–
HGU-84/5P	–	–	X	X	X	-	X	–	X	X	X	–	–	–	–	–	–	–
HGU-84/6P	–	–	–	–	–	–	–	X	–	–	–	–	–	–	–	–	–	X
HGU-84/7P	–	–	–	–	–	–	–	–	–	–	–	X	–	–	–	–	–	–
HGU-84/8P	–	–	–	–	–	X	–	–	–	–	–	-	–	–	–	–	–	–

Legend: X = Required

(1) = A/C flying high altitude mission (UH-1N SAR only)

Notes:
1. KC-130 Aircrewmembers are authorized to use HGU-84/5P Series helmet as an NVIIS platform.
2. Instructor Pilots in T-34 Series aircraft who have been issued HGU-84/P series helmets may continue to use those helmets during assignment as instructors in CNATRA T-34 series aircraft.

Section 3-2. Sizing

3-22. GENERAL.

3-23. The concept of sizing as used in this chapter refers to the basic methods to be followed by the Aircrew Survival Equipmentman to determine and obtain the proper size helmet from supply. When the basic helmet assembly size is received, buildup to the required configuration can begin (Section 3-3).

3-24. SIZING.

3-25. Helmet size must be determined for each aircrewmember as follows:

NOTE

Sizing instructions are provided only as general guidance. Because of the wide variation in head shapes likely to be encountered, it is not possible to present detailed guidance. The helmet should fit the head closely. For this reason, aircrewmembers should be fitted with the smallest helmet size that provides an acceptable fit.

1. If built-up helmet assemblies are available, the aircrewmember should perform a trial fitting to determine the correct size to be ordered. If helmet assemblies are not available, measure the circumference of the aircrewmember's head at the hatband line using a tape measure. Refer to table 3-3 as a guide for sizing.

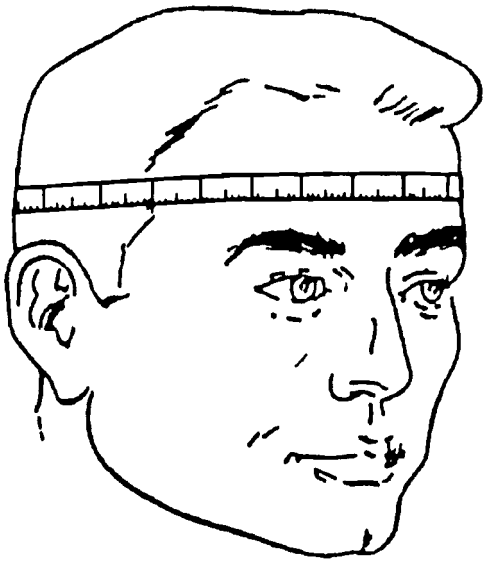

3p25s1

Step1 - Para 3-25

2. Once the correct size has been determined, requisition the helmet through normal supply channels.

Table 3-3. Helmet Sizing Guide

Circumference (Inches)	Size	Part Number
21.0 - 22.5	Medium	89D7748-1
22.5 - 24.0	Medium/Large	89D7748-2
24.0 - 24.9	Extra-Large	89D7748-3
Greater than 24.9	Extra-Large Wide	89D7748-4

Section 3-3. Helmet Buildup

3-26. GENERAL.

3-27. When the helmet assembly components are received, carefully inspect the shipping containers for evidence of damage or signs of abuse. Open each container and verify that all required items have been received.

NOTE

If any parts are defective, damaged, or missing, return all parts to the shipping container, prepare a Quality Deficiency Report (QDR), and notify the proper authority.

3-28. ASSEMBLY OF COMPONENTS.

3-29. ORDER OF ASSEMBLY. Refer to table 3-4 for components and order of assembly required to build up the helmet assembly. Components and parts shall be installed on the helmet in accordance with and in the order shown in the tables.

NOTE

The right or left side of the helmet is determined by referring to the right or left side of the person wearing the helmet.

Table 3-4. Assembly of Components

Order of Assembly	Component/Assembly to be Installed	Paragraph Reference
1	Installation of Reflective Tape	3-30
2	Installation of Battery Securing Patch	3-31
3	Installation of Strobe Light Securing Patch	3-32
4	Wiring of Helmet Block Assembly	3-34
5	Installation of NVIIS Wiring Harness Assembly	3-35
6	Installation of Gunsight Wiring Harness Assembly (HGU-67/P Only)	3-36
7	Installation of Gunsight Receptacle Assembly (HGU-67/P Only)	3-37
8	Installation of Energy-Absorbing Liner Assembly	3-38
9	Installation of Communications Components	3-39
	a. Installation of M22442/57-1 or M22442/61-1 Radio Frequency Cable and H-87B/U Earphones	3-40
	b. Installation of Boom Microphone Assembly	3-41
	c. Installation of M22442/37-4708 (CX-4708A/AIC) Cable Assembly and MIL-C-22442/30-1 (CX-13155/A) Cordset or M22442/30-2 (CX-13164/A) Cordset	3-42

Table 3-4. Assembly of Components (Cont)

Order of Assembly	Component/Assembly to be Installed	Paragraph Reference
9 (Cont)	d. Installation of M22442/15-1 (CX-4832A/AR) Cable Assembly or M22442/19-1 (CX-12972/AR) Cable Assembly	3-44
	e. Installation of MK-1564/AIC Tempest Communications Cable and MJS-103 Communications Switching Assembly	3-44A
	f. Installation Amp Mounting Bracket	3-45
	g. Installation of M23595/1-2 (AM-3597C/A) Boom Microphone Amplifier	3-46
	h. Installation of Earphones and Earcup Assemblies	3-47
	i. Installation of Optional Communications Ear Plug (CEP)	3-47A
10	Installation of Visor Assemblies and Visor Cover	3-48
11	Installation of Bayonet Receiver Assembly	3-49
12	Buildup of Quick Don Mount Assembly	3-50
13	Installation of TPL Assembly	3-52
14	Helmet Fitting	3-53
15	Installation of CBR Adapter Strap Assemblies	3-58

3-30. INSTALLATION OF REFLECTIVE TAPE ON HELMET SHELL ASSEMBLY. To install reflective tape on helmet shell assembly, proceed as follows:

Materials Available

Description	Reference Number
Tape, reflective:	
White, 3-Inch, High-Intensity	NIIN 01-078-8660 (NOTE 1)
White, 6-Inch	L-S-300, Class 3 NIIN 00-100-2153
Red, 1-Inch	L-S-300, Class 1 NIIN 00-949-7552
Red, 3-Inch	L-S-300, Class 1 NIIN 00-949-7598
Red, 6-Inch	L-S-300, Class 1 NIIN 00-951-8833
Yellow, 1-Inch	L-S-300, Class 1 NIIN 00-753-3208

Materials Available (Cont)

Description	Reference Number
Orange, 1-Inch	L-S-300, Class 1 NIIN 00-656-1494
Orange, 3-Inch	L-S-300, Class 1 NIIN 00-656-1186

Notes: 1. High-intensity white tape provides the greatest overall reflectivity and is optimum for visual detection. Submit requisitions for high-intensity tape to routing identifier code ZNC.

Materials Required

Quantity	Description	Reference Number
As Required	Detergent, Mild Liquid	Commercial
As Required	Cloth, Lint-Free	MIL-C-85043 NIIN 00-165-7195

1. Clean the outside of the helmet shell with a damp cloth and a mild cleaning agent to remove all traces of grease, salt, or foreign substances.

2. Remove all traces of the cleaning agent with a clean, damp cloth. Dry with a clean, dry, lint-free cloth.

3. Examine the helmet shell for evidence of cracks, soft areas, splits, or other defects which would be cause for replacement of the item. Chipped paint shall not be cause for replacement. If the helmet shell assembly is defective, the helmet can be disassembled, and the defective shell assembly replaced. Undamaged parts shall be retained for installation on the replacement helmet shell assembly.

4. Aviator helmet assemblies shall be taped in accordance with provisions of OPNAVINST 3710.7 Series (General NATOPS) and Type Commander Directives.

CAUTION

Application of any type of coating on top of reflective tape is not authorized.

5. Remove protective backing from the reflective tape and place in the desired position on the helmet shell assembly.

NOTE

Use of a heat gun increases adhesion of the reflective tape.

6. Document in accordance with OPNAVINST 4790.2 Series.

3-31. INSTALLATION OF BATTERY COMPARTMENT SECURING PATCH FOR P/N 300680-G2 OR 300680-G3 BATTERY COMPARTMENTS. To add a battery compartment securing patch to the rear of the HGU-84/P series or the HGU-67/P helmets for attachment of the P/N 300680-G2 or 300680-G3 battery compartments, proceed as follows:

Materials Required

Quantity	Description	Reference Number
1	Battery Securing Patch, Medium, Large, Extra Large-Wide	(Note 1)

Materials Required (Cont)

Quantity	Description	Reference Number
As Required	Adhesive, Polychloroprene, Class 3	MIL-A-5540 NIIN 00-515-2246
As Required	Detergent, Mild Liquid	Commercial
	-or-	
As Required	Alcohol, Isopropyl	TT-I-735
As Required	Cloth, Lint-Free	MIL-C-85043 NIIN 00-165-7195
4 Inches	Fastener Tape, Pile, Pressure Sensitive, 2-Inch Width	MIL-F-21840, NIIN 01-033-1735
4 inches	Fastener Tape, Pile, Type I, 2-inch Width	MIL-F-21840 NIIN 00-926-4930

Notes: 1. Battery compartment securing patches for use on the HGU-67/P are fabricated in accordance with paragraph 3-107 or 3-108.

NOTE

Battery compartment securing patches used with the HGU-84/P series and HGU-67/P helmets are attached, at the centerline, on the rear of the helmet. The securing patch for the P/N 300680-G2 or 300680-G3 compartment is aligned vertically along the centerline.

1. Clean area on rear of helmet intended for attachment of the securing patch with alcohol, or a mild solution of detergent and water, rinsing thoroughly.

2. Wipe dry with a clean, lint-free cloth.

3. For HGU-84/P series helmets, cut a 4-inch length of pressure sensitive pile fastener tape (NIIN 01-033-1735) from the roll. Round all corners to prevent peeling.

a. Align the patch vertically on the rear centerline of the helmet with bottom edge of patch 1 inch above the upper edge of the rear edgeroll and trace outline of patch onto installed reflective tape using a no. 2 lead pencil. Set patch aside.

b. Deleted.

c. Remove backing and press pressure sensitive pile fastener tape firmly onto outlined area on helmet. Allow adhesive backing to cure for a minimum of 12 hours prior to use.

4. For HGU-67/P helmet:

a. Fabricate patch in accordance with paragraph 3-107 or 3-108.

b. Align the patch vertically, 1 inch above the upper edge of the nape edgeroll on the rear centerline of the helmet and trace outline of patch onto installed reflective tape, using a no. 2 lead pencil. Do not trace around hook fastener cable flap. Set patch aside.

c. Apply adhesive to area outlined on the reflective tape and allow adhesive to dry (approximately 30 minutes).

d. Apply adhesive to the underside of the fabricated securing patch and apply a second coat to the outlined area on the reflective tape. Allow the adhesive to become tacky (approximately 15 minutes).

e. Press securing patch/patches firmly onto prepared area. Smooth all edges.

5. Document in accordance with OPNAVINST 4790.2 Series.

3-31A. INSTALLATION OF THE LOW PROFILE BATTERY COMPARTMENT MOUNTING BRACKET.

To install the low profile battery compartment mounting bracket on the HGU-84/P Series and HGU-67/P Helmets, proceed as follows:

Materials Required

Quantity	Description	Reference Number
1	Kit, Mounting Bracket, Low Profile Battery Compartment	P/N 268471-1 NIIN 01-439-8992

NOTE

The low profile battery compartment mounting bracket kit, P/N 268471-1 contains components for installation of the bracket on both the HGU-84/P and the USAF SPH-4AF Helmets. USN/USMC specific components are: two P/N MS51597-43 screws, two P/N 269252 wedges, two P/N 267987 post nuts, and the P/N 268472 mounting bracket.

1. Remove installed internal components in accordance with paragraph 3-94, step 1. (sub-steps a. thru i.)

2. To determine the helmet shell rear centerline for installation of the low profile battery compartment mounting bracket, measure across the back of the helmet shell, along the upper edge of the nape edgeroll, using a cloth tailor's tape. Place a mark, just above the edgeroll, at the selected centerline location.

3. From the selected location, measure upward 1 1/2 inches, and mark the location for drilling the lower bracket mounting screw hole on the helmet shell. From this mark, measure upward 7/8 inch and mark the location for drilling the upper mounting screw hole.

4. Using a 3/16-inch (0.1875) drill bit, at marked locations, drill mounting screw holes, ensuring the drill bit is perpendicular to the helmet shell surface during drilling. Deburr holes using a jeweler's file.

5. Identify and remove the required components from the mounting bracket kit package. Remove the protective backing covering the adhesive surface on the back of the two P/N 269252 wedges. Center one mounting bracket wedge over each of the drilled holes and press firmly into place on the helmet shell.

NOTE

The low profile battery compartment mounting bracket is positioned on the rear of the helmet with the release tab oriented toward the nape edgeroll, and with the protruding portion of the release tab toward the technician.

6. With post nuts in place on the helmet shell interior, position mounting bracket over installed wedges and attach the bracket to the helmet exterior surface using the MS51597-43 screws. Tighten screws securely.

7. Install internal components in accordance with paragraph 3-94, steps 2 thru 10, as required.

8. Slide low profile battery compartment downward onto the mounting bracket with the ON/OFF switch toward the helmet crown. Secure the battery compartment power cable LEMO connector to the installed helmet mounted NVIIS LEMO adapter at the rear of the helmet.

3-31B. INSTRUCTIONS FOR FABRICATION OF LOW PROFILE BATTERY COMPARTMENT POWER CABLE SECURING PATCH. To fabricate and install a power cable securing patch to stow unused length of battery compartment power cable, proceed as follows:

Materials Required

Quantity	Description	Reference Number
1 1/2-Inch x 2-Inch	Loop Fastener Tape, Self Adhesive, 2-Inch Wide	70-0704-5783-6 NIIN 01-387-5568
2 1/2-Inches	Fastener Tape, Hook, 1-Inch Wide	MIL-F-21840 NIIN 00-454-9063
As Required	Thread, Nylon, Size E	V-T-295 NIIN 00-204-3884
As Required	Adhesive, Polychloroprene, Class 3	MIL-A-5540 NIIN 00-515-2246

NOTE

All machine stitching shall conform to ASTM-D-6193, Type 301 Lockstitch. Stitches shall be set at 8 to 10 stitches per inch, with a minimum backstitch of 3/4 inch.

1. Cut a 1 1/2-inch length of 2-inch loop fastener tape, fold in half, widthwise, to determine centerline. At the determined location, place a mark on the loop side of the fastener tape and set aside for use in fabrication.

2. Cut a 1/2-inch length and a 2-inch length of 1-inch wide hook fastener tape and set aside for use in fabrication.

NOTE

The 1 1/2-inch long by 2-inch wide power cable securing patch will be positioned centered on the outside of the battery compartment with one of the 2-inch wide edges flush against the bottom edge of the battery compartment case.

3. Position the securing patch, loop side up, with the centerline, mark toward the technician, on the work surface. Align the 1/2-inch long piece of 1-inch wide hook fastener tape, with the hook side down, along the right hand edge of the securing patch. Starting at the upper right hand corner, mate the 1/2-inch long piece of 1-inch wide hook fastener tape to the loop fastener tape downward along the right side of the securing patch. Using a 1/8-inch seam, sew the power cable hold down flap to the right hand edge of the securing patch using two rows of stitching, 1/8 inch apart, backstitching 1/2 inch.

4. Center the 1-inch width of the 2-inch long piece of hook fastener tape over the mark on the bottom edge of the securing patch, with the hook side down. Maintaining alignment, mate the edges of the fastener tapes evenly. Using a 1/8-inch seam, sew the power cable stowage flap to the lower edge of the securing patch using two rows of stitching, 1/8 inch apart, backstitching 1/2 inch.

NOTE

Use of any type or color of self adhesive loop fastener tape available through local supply is authorized. If self adhesive loop fastener tape is not available, use standard loop tape and follow gluing procedures contained in paragraph 3-32, steps 3 thru 6.

5. Remove protective backing from securing patch, align the bottom edge of the patch with the bottom edge of the battery case and press firmly into place. Open the power cable stowage and the power cable hold down flaps.

6. Route the battery compartment power cable downward across the outside of the case, along the right hand side of the securing patch. With the cable positioned under the hold down flap, press the flap closed over the power cable. Fake the remaining length of the cable into s-folds, across the width of the securing patch, with the LEMO connector oriented toward the lower left corner of the battery compartment. Close the power cable stowage flap over the s-folds, and press firmly into place.

7. Mate the battery compartment LEMO connector to the helmet installed receptacle, at its exit point, on the left rear of the helmet shell.

3-32. INSTALLATION OF STROBE LIGHT SECURING PATCH. To install the strobe light securing patch, proceed as follows:

Materials Required

Quantity	Description	Reference Number
As Required	Detergent, Mild	Commercial
	-or-	
As Required	Alcohol, Isopropyl	TT-I-735
As Required	Cloth, Lint-Free	MIL-C-85043 NIIN 00-165-7195
2 Inches	Tape, Pile, Type I, 2-Inch	MIL-F-21840 NIIN 00-296-4930
As Required	Adhesive, Polychloroprene, Class 3	MIL-A-5540 NIIN 00-515-2246

NOTE

Use of any size or type of pile fastener tape available through local supply is authorized. Black or olive green are preferred colors.

1. Clean helmet surface intended for strobe light securing patch with alcohol, or a mild solution of detergent and water; rinse thoroughly.

2. Wipe dry with a clean, lint-free cloth. Allow surface to air dry thoroughly.

3. Position a 2-inch x 2-inch piece of pile fastener tape on the crown of the helmet at a point 1/4 inch to the right of the lens pad and 1 inch from the aft end of the lens pad. Hold in place and trace around the tape with a lead pencil.

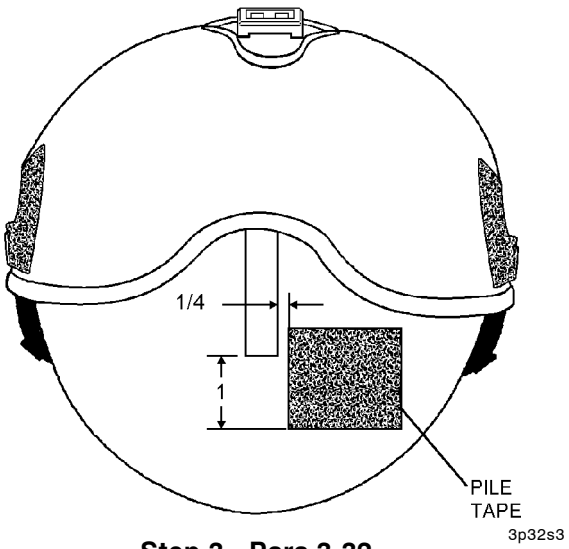

Step 3 - Para 3-32

4. Apply adhesive to the outlined area, and allow adhesive to dry approximately 30 minutes.

5. Apply adhesive to the underside of the pile fastener tape and a second coat to the outlined area on the helmet. Allow adhesive to become tacky (approximately 15 minutes).

6. Align pile fastener tape with outlined area and press firmly onto helmet shell assembly.

7. Document in accordance with OPNAVINST 4790.2 Series.

3-33. HELMET SHELL CONVERSION TO HGU-67/P CONFIGURATION. To provide ease of installation of HSA components, perform the following procedure:

Materials Required

Quantity	Description	Reference Number
1	Helmet Assembly, HGU-84/P, Medium	89D7748-1 NIIN 01-387-2197
	-or-	
1	Helmet Assembly, HGU-84/P, Large	89D7748-2 NIIN 01-387-6711
	-or-	
1	Helmet Assembly, HGU-84/P, Extra-Large	89D7748-3 NIIN 01-386-3758
	-or-	
1	Helmet Assembly, HGU-84/P, Extra-Large Wide	89D7748-4 NIIN 01-386-3763
1	Kit, Bracket Assembly, Medium/Large	3151AS123-1 NIIN TBD
	-or-	
1	Kit, Bracket Assembly, Extra-Large	3151AS124-1 NIIN TBD
	-or-	
1	Kit, Bracket Assembly, Extra - Large Wide	3151AS121-1 NIIN TBD

Materials Required (Cont)

Quantity	Description	Reference Number
1	Gunsight Wiring Harness Assembly	7636589 NIIN 01-491-0818
1	Quick Don Mount Modification Kit	93B8601 NIIN 01-390-2929
As Required	Drilling Guide Fixture	70100-1 (Med) 70100-2 (Lg) 70100-3 (X-Lg) 70100-4 (X-Lg Wide)
As Required	Adhesive, Polychloroprene, Class 3	MIL-A-5540 NIIN 00-515-2246
As Required	Tape, Pressure Sensitive	PPP-T-60TY4CL1
As Required	Adhesive, RTV 102/732	MIL-A-46106 NIIN 00-877-9872

NOTE

The Gunsight Wiring Harness Assembly, P/N 7636589, and Bracket Assemblies, P/Ns 3151AS123-1, 3151AS124-1, and 3151AS121-1, contain the necessary parts and hardware for incorporation of the Helmet Gunsight Assembly onto the HGU-84/P helmet. Kit P/N 93B8601 contains the required parts and hardware for installation of the NVIIS Wiring Harness.

1. Unsnap chin strap and remove right and left earcup assemblies from pile fastener material in helmet shell earcup cavities.

a. Remove screws, flat washers, lock washers and flanged nuts securing the chin/nape straps to the rear of the helmet shell. Reattach hardware to loosened straps to prevent twisting of straps during maintenance.

2. Place helmet inverted on the work surface, loosen and remove the two screws that attach the lens pad rest to the helmet shell. Detach lens pad rest and set aside for reinstallation.

3. Position helmet upright on the work surface with the left side closest to the technician. Mark the two tooling dimples, located just forward of the visor snap fastener stud on the helmet shell, using a no. 2 medium lead pencil or white correction fluid.

4. Position the drilling guide fixture over the left side of the helmet outer surface with large circular hole over the visor snap fastener stud. Ensure the two smaller circular holes are located over the tooling dimples marked in the previous step. Align the upper drilling guide fixture thumbscrew hole (hole without bushing) over aft lens pad rest screw hole with the lower thumbscrew hole over the NVIIS wiring harness exit point. Maintain alignment and insert the upper positioning thumbscrew and one flat washer through the drilling guide into the inside of the helmet through the aft lens pad rest screw hole. From inside the helmet install a flat washer and wing nut onto the thumbscrew and tighten. Repeat procedure at lower thumbscrew hole.

5. Prior to drilling receptacle bracket mounting holes, verify tooling dimples are located within two smaller circular holes of the fixture. If necessary, slightly loosen the thumbscrew wing nuts and shift the drilling guide fixture position until the dimples are centered, then tighten wing nuts. When drilling holes in helmet shell, ensure drill bit is perpendicular to the shell surface. Drill four holes using a no. 9 (0.196 inch diameter) drill bit, through drilling guide fixture bushings into helmet shell.

6. Loosen wing nuts and remove positioning thumbscrews from drilling guide fixture. Remove fixture from helmet and deburr each drilled location.

7. Fabricate and install the required battery securing patch in accordance with paragraph 3-31.

8. Using correct size kit, bracket assembly and Gunsight wiring harness assembly, P/N 7636589, install receptacle and receptacle bracket onto the helmet in accordance with procedures contained in paragraph 3-37.

9. Invert helmet on the work surface and from inside the helmet, remove the four screws and washers securing the helmet block assembly to the brow of the helmet.

10. Place helmet upright on the work surface with the front of the helmet toward the technician. Using a rotary hand tool (Dremel), widen the existing wiring harness terminal block exit opening 3/8 inch to the right (as worn) to permit free passage of the gunsight wiring harness assembly terminal block.

11. Following procedures outlined in paragraph 3-36, secure both the NVIIS and HSA terminal blocks into the helmet block assembly and onto the brow of the helmet shell.

12. Reinstall lens pad rest removed in step 2 above, then install remaining internal components.

13. Contact aircrewmember to arrange for a helmet fit check and boresight check of the helmet gunsight assembly.

3-34. WIRING OF HELMET BLOCK ASSEMBLY FOR NVIIS OR NVIIS AND HSA CAPABILITY. To provide NVIIS or NVIIS and HSA capability, the terminal blocks of the internal wiring harnesses must be installed with the helmet block assembly.

3-35. Installation of NVIIS Wiring Harness. To install the NVIIS wiring harness, proceed as follows:

Materials Required

Quantity	Description	Reference Number
1	Quick Don Mount Modification Kit	93B8601 NIIN 01-390-2929
1	Clamp, Loop	MS21919WDG65 NIIN 00-598-0146
As Required	Tape, Pressure Sensitive	PPP-T-60TY4CL1
As Required	Adhesive, RTV 102/732	MIL-A-46106 NIIN 00-877-9872
1	Post, T-nut, 6-32 X 1/4-inch	67B1755
1	Screw, Machine, 8-32	MS51597-41

NOTE

The modification kit contains a wiring harness assembly, P/N 3151AS135-1, mounting block assembly, P/N 3151AS151-1, and attaching hardware. The mounting block assembly is used to buildup the Quick Don Mount Assembly, P/N AN/AVS-6(V)3 helmet interface. Refer to paragraph 3-50.

For in-service helmets being configured for NVIIS use only, follow steps 1 through 18. Helmets being converted to the HGU-67/P configuration use steps 4 through 7.

1. Unsnap chin strap and position clear of work area.

2. Detach earcup assemblies from pile fastener tape on the helmet shell interior and position clear of work area.

a. Place helmet upright on work surface with the left rear facing the technician. Check the factory drilled NVIIS wiring harness exit hole for obstruction by the energy absorbing liner.

b. If the hole is obstructed, mark area on the visible surface of the energy absorbing liner through the helmet shell.

NOTE

Minor alterations to the energy absorbing liner to permit free passage of the NVIIS wiring harness are authorized.

c. Remove screws, flat washers, lock washers and flanged nuts securing the chin/nape straps to the rear of the helmet shell. Reattach hardware to loosened straps to prevent twisting of straps during maintenance.

3. Invert helmet assembly on work surface and remove TPL and underlying energy-absorbing liner in accordance with paragraph 3-94, step 1., sub-steps a. through i., and set aside for reinstallation.

4. Remove the helmet block from the helmet shell by loosening the four screws and washers securing the backup plate to the interior surface of the helmet shell assembly.

5. On the underside of the helmet block, remove the terminal block retainer, by loosening the 2-56 screw and washer holding it in place.

6. Thread the end of the NVIIS wiring harness opposite the terminal block through the terminal block exit hole into the helmet shell interior letting the terminal block hang freely.

7. If installing the HSA wiring harness, go to paragraph 3-35. If the HSA is not to be installed, proceed to step 8.

NOTE

The terminal block retainer is designed to prevent improper installation of the wiring harness terminal block. The arms of the retainer are of different lengths and widths to accommodate specific cable terminal blocks.

8. Lay the helmet block face down on the work surface and insert the NVIIS wiring harness terminal block into the left hand slot of the inverted mounting block with the gold contacts of the terminal block facing toward the work surface. Align the arms of the retainer with the mating grooves in the plastic case of the terminal block housing, slide retainer into position. If new self-locking screws are not available, re-use is authorized provided that the old screw is reinstalled with MIL-A-46106 RTV adhesive.

9. Secure retainer in place with the 2-56 screw and washer. Torque screw to 2 in-lbs. Do not over-torque screw.

10. Align the helmet block on the exterior surface of the helmet shell assembly, ensuring the two longer legs of the block are closest to the brow edgeroll.

11. Position backup plate on the inner surface of the helmet shell assembly ensuring the wiring harness cable exits under the left cable channel of the backup plate. If new self-locking screws are not available, re-use is authorized provided that the old screw is reinstalled with MIL-A-46106 RTV adhesive.

12. Install the four backup plate screws and washers. Torque screws to 3 in-lbs. Do not pinch cable and do not over-torque screws.

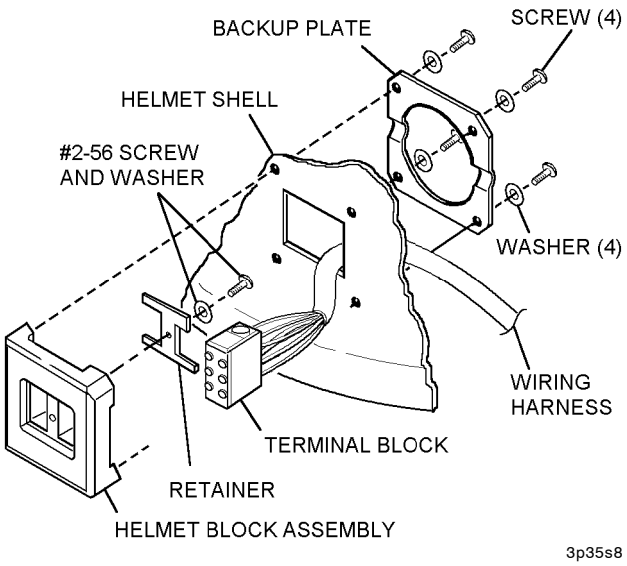

Steps 8 thru 12 - Para 3-35

13. Cover backup plate and back of the terminal block with a 3 x 2 inch piece of pressure sensitive tape.

14. Route NVIIS wiring harness cable along the upper edge of the pile fastener tape in the left earcup cavity to the factory drilled cable exit hole in the left rear of the helmet shell assembly.

15. Rubber grommet encircling wiring harness cable is notched on both the inner and outer surfaces to assist in positioning the electrical connector correctly. Pass the electrical connector out of the helmet shell interior through the factory drilled exit hole, install wiring harness grommet into exit hole with the external notch oriented to the right rear of the helmet shell assembly.

a. On the left rear side of the helmet, measure 1 1/4 inch to the right of the NVIIS wiring harness exit hole, and 1 1/8 inch above the upper edge of the nape edgeroll, using a cloth tape measure, and place a mark at the selected location.

b. At selected location on the rear of the helmet, using a No. 19 (0.169) bit, holding the drill bit perpendicular to the helmet surface, drill the clamp loop attaching screw hole.

c. Position heat shrinkable sleeving over knurled area on electrical connector. Apply heat, using heat gun, to shrink sleeving.

d. Place clamp loop over sleeving on electrical connector and attach clamp loop to helmet shell using the screw and post, do not tighten. Orient red dot on electrical connector so that it is visible and parallel to the nape edgeroll. Maintain this orientation and tighten clamp loop attaching screw.

16. If energy absorbing liner requires alteration, remove only enough of the liner material from the lower left edge to permit free passage of the wiring harness cable.

NOTE

A length of nylon webbing may be used as cradle to aid positioning the energy absorbing liner into the helmet shell. Once the desired position is obtained, the webbing can be removed.

17. Install energy absorbing liner, TPL, and earcups in accordance with paragraphs 3-38, 3-52, and 3-47.

18. Document in accordance with OPNAVINST 4790.2 Series.

3-36. Installation of HSA Wiring Harness (HGU-67/P). To install the HSA wiring harness, proceed as follows:

Materials Required

Quantity	Description	Reference Number
1	GunsightWiring Harness Assembly	7636589 NIIN 01-491-0818
As Required	Adhesive, RTV 102/732	MIL-A-46106 NIIN 00-877-9872
As Required	Tape, Pressure Sensitive	PPP-T-60TY4CL1

1. If not already installed, perform NVIIS wiring harness installation, paragraph 3-35, steps 1 through 7.

2. From inside the helmet, thread the terminal block end of the HSA wiring harness out through the terminal block exit opening and allow it to rest on the helmet shell exterior.

NOTE

The terminal block retainer is designed to prevent improper installation of the two wiring harness terminal blocks. The arms of the retainer are of different lengths and widths to accommodate specific foolproofing shapes in the terminal blocks. The NVIIS terminal block is marked NVG, and the gunsight terminal block is marked HSA for ease of identification.

3. Orient the slots of the terminal blocks and the retainer legs. Make sure arrows on terminal blocks point up.

4. Position terminal blocks of gunsight wiring harness assembly and NVIIS wiring harness assembly on retainer. Hold in place.

NOTE

The longer legs on the rear of the helmet block should be toward the edgeroll; the shorter legs should be toward the top of the helmet. The NVIIS terminal block should be on the LH side; the HSA terminal block should be on the RH side.

5. Insert terminal blocks into helmet block assembly, ensuring that the longer legs of the helmet block are toward the edgeroll. Ensure that terminal blocks are installed on the correct sides. If new self-locking screws are not available, re-use is authorized provided that the old screw is reinstalled with MIL-A-46106 RTV adhesive.

6. Attach the terminal block retainer to the helmet block with one 2-56 screw and washer. Torque screw to 2 in-lbs. Do not over-torque screw.

7. Position the helmet block assembly on the outside of the helmet shell assembly with longer legs toward edgeroll. Position backup plate on the inside of the helmet, ensuring that the NVIIS wiring harness cable exits under the LH channel and the HSA cable exits under the RH channel of the backup plate. Ensure that wiring harness cables are not pinched beneath backup plate when tightening screws. To prevent cracking damage to the legs of the helmet block, do not over-torque screws. If new self-locking screws are not available, re-use is authorized provided that the old screw is reinstalled with MIL-A-46106 RTV Adhesive.

8. Secure the backup plate with four screws and washers. Torque screws to 3 in-lbs. Do not pinch cables and do not over-torque screws.

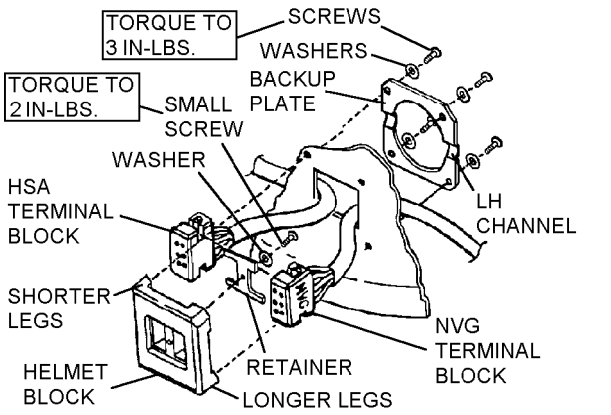

Steps 3 thru 8 - Para 3-36

9. Cover backup plate and backs of the terminal blocks with a 3 x 2 inch piece of pressure sensitive tape.

10. Route NVIIS wiring harness cable along the upper edge of the pile fastener material in the left helmet shell earcup cavity to the factory drilled cable exit hole at the left rear of the helmet shell assembly. Route the internal portion of the HSA wiring harness cable along the upper edge of the pile fastener material in the right helmet shell earcup cavity to the right rear corner of the leather covered nape area edgeroll.

11. Rubber grommet encircling wiring harness cable is notched on both the inner and outer surfaces to assist in positioning the electrical connector correctly. Pass the electrical connector through the helmet shell and install grommet into factory drilled exit hole with the external notch oriented towards the right rear of the helmet shell assembly.

a. Position strain relief clamp around knurled portion of the cable electrical (LEMO) connector.

NOTE

A small amount of RTV may be applied to the first few threads of screws prior to installation.

b. During installation of chin/nape assembly, position connector parallel to left rear helmet shell nape edgeroll and secure in place with chin/nape strap attaching screw.

12. Perform gunsight receptacle installation in accordance with paragraph 3-37.

13. Document in accordance with OPNAVINST 4790.2 Series.

3-37. Installation of Gunsight Receptacle Assembly (HGU-67/P). The HSA gunsight receptacle assembly is comprised of a cable assembly and a receptacle assembly which must be mounted to a receptacle bracket assembly prior to installation. The HSA harness terminal block must be previously installed into the helmet block (see paragraph 3-36). Install the gunsight receptacle assembly as follows:

Materials Required

Quantity	Description	Reference Number
1	Bracket Assembly, Medium/Large	3151AS123-1 (Note 1)
	-or-	
1	Bracket Assembly, Extra-Large	3151AS124-1 (Note 1)
	-or-	
1	Bracket Assembly, Extra-Large Wide	3151AS121-1 (Note 1)
As Required	Adhesive, Polychloroprene, Class 3	MIL-A-5540 NIIN 00-515-2246
As Required	Adhesive, RTV 102/732	MIL-A-46106 NIIN 00-877-9872

Notes: 1. Receptacle bracket assemblies are commercially available from:
AMRON International
759 West Fourth Avenue
Escondido, CA 92025-1508
Telephone (760) 746-3834.

1. If leather is attached to helmet at nape, carefully peel leather away from edgeroll.

NOTE

The size Large Bracket Assembly, P/N 3151AS123-1, is used on both the size medium and size large helmets.

2. Attach appropriate size receptacle bracket to bottom of receptacle assembly with 3 washers and smallest screws. Avoid pulling on receptacle wiring. Avoid pinching wires. Cable assembly must exit through slot in receptacle bracket.

3. Secure gunsight wiring harness cable to leg of receptacle bracket assembly with loop clamp, shorter screw, and washer. This is a strain relief. Make sure there is no tension on cable between clamp and receptacle.

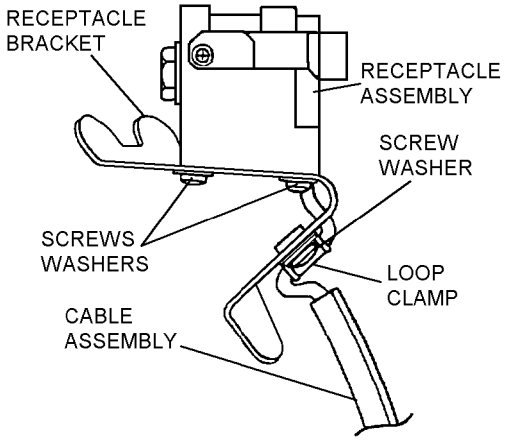

3p37s2

Steps 2 and 3 - Para 3-37

NOTE

A small amount of RTV may be applied to the first few threads of screws prior to installation.

4. Position receptacle doubler inside helmet over the three holes drilled in accordance with paragraph 3-33, step 5. Align receptacle bracket on outside of helmet, over the three holes, and secure to doubler with the three longest screws and flat washers from the bracket assembly kit.

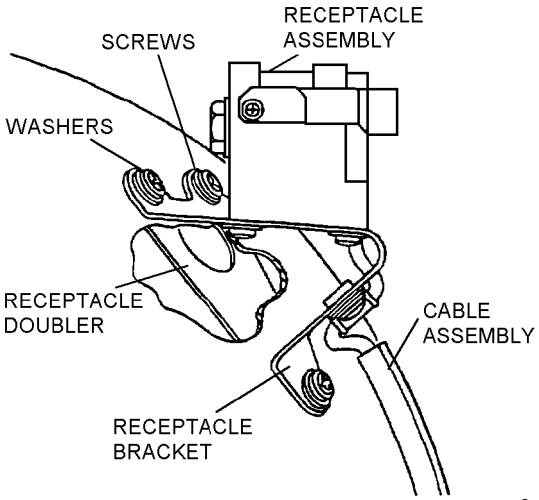

3p37s4

Step 4 - Para 3-37

5. Place washer on screw. Insert screw through molded strain relief block and install lockwasher onto screw. Orient strain relief block on helmet shell assembly and secure with post.

6. Align receptacle wiring with edge of battery securing patch, and fold hook fastener strip over cable.

7. Route gunsight wiring harness beneath leather of nape edgeroll. Harness should enter at LH corner of leather and make a smooth transition around the edgeroll to inside of helmet. Make sure cable is not twisted or crimped.

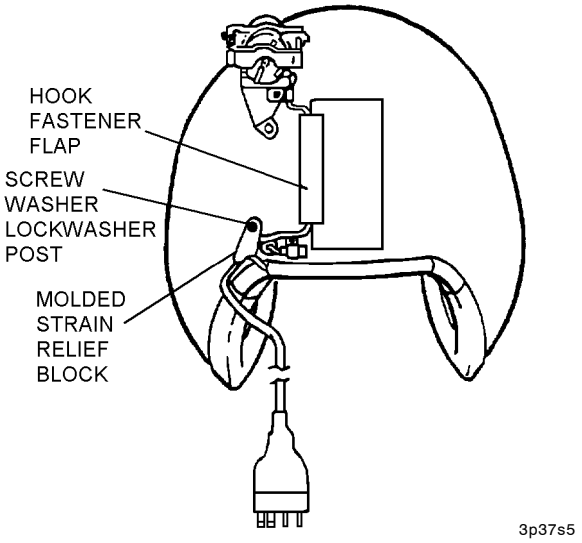

Steps 5 thru 7 - Para 3-37

8. Inside helmet, route gunsight wiring harness along edgeroll padding, and attach hook fastener of sleeve assembly to pile fastener inside helmet. Ensure that harness is not loose and is flat against inside of helmet shell.

NOTE

Because the gunsight wiring harness cable length is designed to fit the largest helmet size, there may be up to two inches of slack in the cable inside the helmet. Excess cable length can be stowed in an S-fold inside the retainer sleeve.

9. If necessary, use a hooked wire to stow excess gunsight cable in an S-fold inside the retainer sleeve.

10. Apply adhesive to inside of helmet, allowing to dry for approximately 30 minutes.

11. Apply adhesive to underside of leather, and apply a second coat to inside of helmet. Allow adhesive to become tacky (approximately 15 minutes.)

12. Carefully fold leather over edgeroll and gunsight wiring harness, smoothing out wrinkles and bubbles.

NOTE

A length of nylon webbing may be used as cradle to aid positioning the energy absorbing liner into the helmet shell. Once the desired position is obtained, the webbing can be removed.

13. Install energy absorbing liner, TPL, and earcups in accordance with paragraphs 3-38, 3-52, and 3-47.

14. Document in accordance with OPNAVINST 4790.2 Series.

3-38. INSTALLATION OF ENERGY-ABSORBING LINER ASSEMBLY. To install the energy-absorbing liner assembly, proceed as follows:

Materials Required

Quantity	Description	Reference Number
1	Energy-Absorbing Liner, Medium	90D7860
	-or-	
1	Liner Assembly, Energy-Absorbing, Large	90D7861
	-or-	
1	Liner Assembly, Energy-Absorbing, Extra-Large	90D7862
	-or-	
1	Liner Assembly, Energy-Absorbing, Extra-Large Wide	90D7863

CAUTION

Take extreme caution to prevent damage to the NVIIS and gunsight wiring harness assemblies during installation procedures. Also, avoid placing undue pressure on the receptacle and receptacle bracket on the outside of the helmet.

NOTE

Proper positioning and orientation of the energy absorbing liner within the helmet shell interior is critical to enable proper alignment of the NVIIS to the aircrewmember's eyes. Improper positioning will result in restrictions to the field of view available to the aircrewmember through the Image Intensifier set.

1. Prior to the installation of the energy absorbing liner, measure across the helmet shell brow and nape edgeroll to determine the centerline and mark. Determine centerline of the liner brow and nape area and mark. The alignment of these marks during installation will aid in eliminating incorrect positioning.

2. Observe centerline mark on liner brow and nape to use as a reference during installation. Make sure the helmet brow and nape edgerolls are similarly marked.

3. Invert the helmet assembly on a padded surface to prevent damage to the receptacle assembly. Position helmet with the brow away from the technician.

4. Ensure that all attaching hardware that will be covered by the liner is securely fastened in place. Make sure both wiring harnesses are properly positioned and attached.

5. Cut a 36-inch piece of Type VI webbing. Place webbing inside the helmet from brow to nape to be used for repositioning the liner.

6. Holding liner by the nape, insert liner brow downward into the helmet between the two earcup cavities.

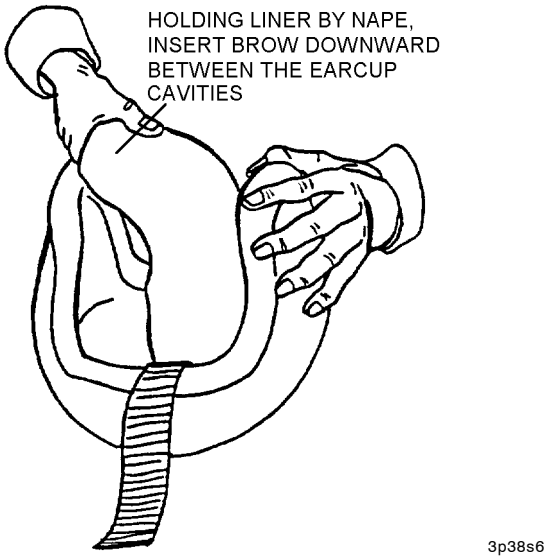

Step 6 - Para 3-38

7. Slowly rotate the liner brow toward the helmet brow until centerline mark on liner brow can be aligned with centerline of helmet brow.

Step 7 - Para 3-38

8. With brow centerlines aligned, and the liner centered within the helmet, grasp free ends of webbing and bring together over center of inverted helmet. Slide hand downward on webbing and grasp firmly to slightly compress both ends of the liner inward, while maintaining compression, move brow of liner forward over the mounting block backup plate and into contact with the inner surface of the helmet brow edgeroll. Ensuring brow alignment is established, while maintaining compression, gently but firmly apply downward pressure on liner nape to seat crown of liner against helmet shell interior surface. Release tension on webbing cradle to relax liner compression.

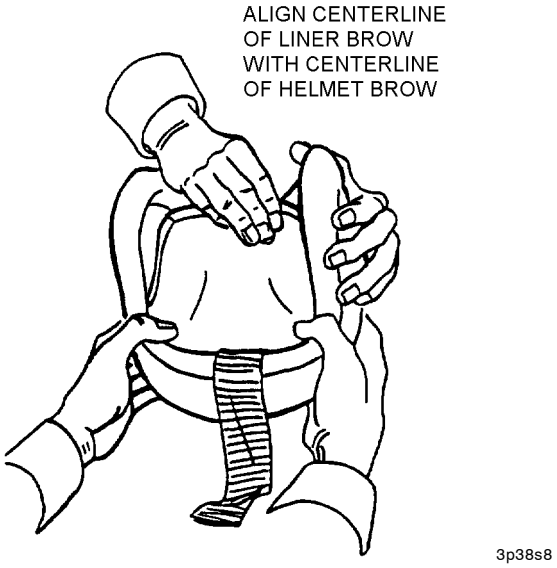

Step 8 - Para 3-38

9. Press the nape of the liner downward past the nape edgeroll, while ensuring the liner brow is in firm contact with the inner surface of helmet brow edgeroll.

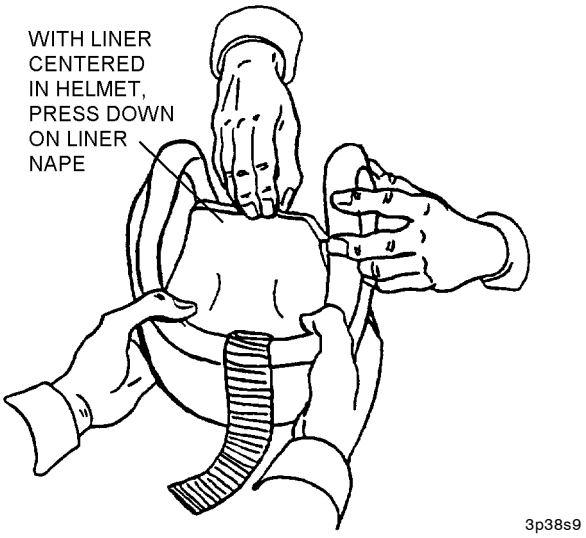

Step 9 - Para 3-38

10. When the liner is seated in the helmet, pull the compressed nape edgeroll from beneath the liner.

11. Check the liner for centerline alignment at the brow and nape. Check for firm contact between the liner brow and the helmet brow edgeroll. An improperly installed liner will misalign gunsight and NVIIS accessories.

12. If realignment of liner is necessary, compress liner with webbing cradle and adjust position as required.

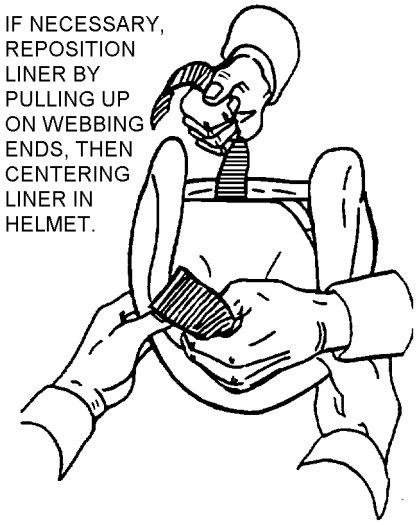

Step 12 - Para 3-38

3p38s12

13. Work liner into correct position, then press down on liner nape to seat the liner. Repeat liner loosening and adjustment as necessary until liner is correctly positioned in the helmet assembly.

14. Remove the webbing by pulling from the rear of the helmet shell.

15. On the inside surface of the liner, install front and rear hook fastener tapes as follows:

a. Install two tabs on the inside front of the energy absorbing liner left and right of center over the eyes.

b. Install two tabs in the rear approximately 1 1/2 inch left and right of center and 1/2 inch from the bottom edge of the liner.

16. Document in accordance with OPNAVINST 4790.2 Series.

3-39. INSTALLATION OF COMMUNICATIONS COMPONENTS.

3-40. Installation of M22442/57-1 Cable and H-87B/U Earphones. To install the communications cable assembly and H-87B/U earphones, proceed as follows:

Materials Required

Quantity	Description	Reference Number
1	Cable Assembly, Radio Frequency	M22442/57-1 NIIN 01-297-6818
1	Cable Assembly, Radio Frequency (Note 2)	M22442/14-1 NIIN 00-631-8566
1	Cable Clip (Note 1)	MK-634/AIC NIIN 00-864-8047
1	Earphones	H-87B/U NIIN 01-056-7225
As Required	Adhesive, RTV 102/732	MIL-A-46106 NIIN 00-877-9872
As Required	Adhesive, Polychloroprene, Class 3	MIL-A-5540 NIIN 00-515-2246

Notes: 1. Use of Cable Clip, MK-634/AIC is optional.
2. Use Cable M22442/14-1 with Cable Assembly M22442/57-1 to connect to aircraft audio system.

1. Remove installed visor and detach right and left earcups from helmet shell earcup cavity pile fastener material. Remove ear seals and earphone holders from earcups.

2. Detach left earcup cavity pile fastener material from interior surface of helmet shell and fold clear of work area. Remove left rear integrated chin/nape attaching screw, flat washer, lock washer and flanged nut, set aside for reinstallation.

NOTE

Ensure selected cable location will not interfere with boom microphone operation or amplifier mounting bracket installation.

3. Select a location on the left helmet shell earcup cavity for drilling of radio frequency cable installation hole, mark location.

4. At selected location, using a 1/4 inch bit, drill a pilot hole. Using a 3/8 inch bit, drill opening to finished dimension.

5. Pass earphone leads and strain relief cord of cable assembly, from outside of helmet shell, to the interior, through the installation hole drilled in the previous step.

6. Press grommet, that encircles the radio frequency cable, into drilled hole.

7. Install earphone leads of M22442/57-1 into right and left earcups.

8. Insert cable assembly earphone pins into earphones, tighten set screws and insert earphones into cavities of earphone holders.

9. Insert earphone holders, with earphones, into earcups, install ear seals onto earcups and position them clear of work area. Attach strain relief clamp to radio frequency cable strain relief cord with a half-hitch.

10. Cut a pass-thru slit into left earcup cavity pile fastener material to accommodate installed radio frequency earphone leads and grommet. Re-cement helmet shell earcup cavity pile fastener material to interior surface of the helmet shell earcup cavity.

NOTE

A small amount of RTV may be applied to the first few threads of screws prior to installation.

11. Install left rear integrated chin/nape strap attaching screw, flat washer, cable strain relief clamp, lock washer and flanged nut. Attach earcups to pile fastener material in helmet shell earcup cavity and reinstall visor.

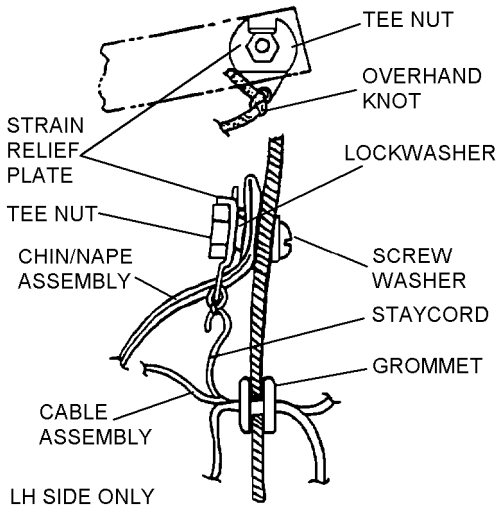

Steps 10 and 11 - Para 3-40 3p40s10

12. If desired, attach MK-634/AIC cable clip to radio frequency cable U-179A/U connector.

3-41. Installation of Boom Microphone Assembly.

Materials Required

Quantity	Description	Reference Number
1	Boom Microphone Assembly (Note 1)	M-33A/AIC NIIN 00-755-4643
1	Boom Microphone Assembly (Note 2)	M26542/2-01 NIIN 00-188-8529
1	Boom Microphone Assembly (Note 3)	M26542/2-02 NIIN 01-188-8530
1	Boom Microphone Assembly (Note 4)	M26542/2-03 NIIN 01-188-8528

Notes:
1. The M-33A/AIC Boom Microphone Assembly is an M-87/AIC microphone supplied with a 6-inch CX-4434/U extension cable.
2. The M26542/2-01 Boom Microphone Assembly is an M-87/AIC microphone supplied with a 13-inch CX-4434/U extension cable.
3. The M26542/2-02 Boom Microphone Assembly is an M-87/AIC microphone supplied with a 16-inch CX-4434/U extension cable.
4. The M26542/2-03 Boom Microphone Assembly is an M-87/AIC microphone supplied with a 23-inch CX-4434/U extension cable.

NOTE

Refer to Section 8-2 for installation of optional Boom Microphone Light, ML-8 authorized by ACC 620.

1. Place helmet on RH side on a padded surface, with boom swivel assembly pointing up.

2. Remove the outer pan head screw from the knurled nut of the boom swivel assembly.

3. Remove the knurled nut from the boom swivel assembly by twisting it counterclockwise.

4. Remove the serrated washer and upper half of boom adapter.

5. Place the boom microphone assembly between the inner and outer boom adapters, ensuring that the boom is aligned in the adapter grooves. Hold parts together.

6. Install the boom microphone and adapters; install the serrated washer with serration inboard. Install the knurled nut with the countersink outboard. Tighten the knurled knob. Secure with the pan head screw.

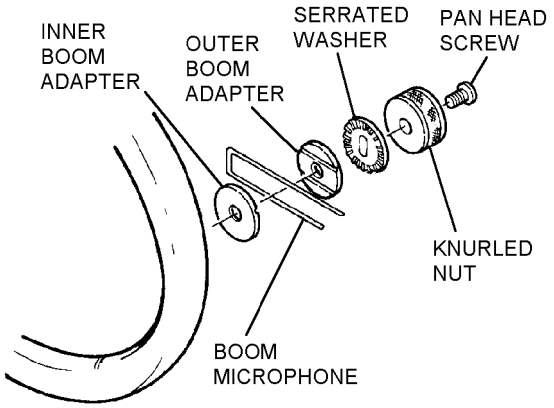

Steps 2 thru 6 - Para 3-41

7. If the CX-4434/U boom cable assembly has been removed from the boom microphone assembly, loosen two setscrews on the microphone, install plug of cable assembly, and tighten setscrews.

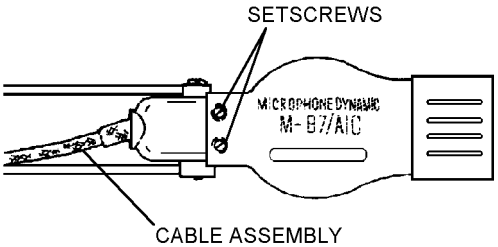

Step 7 - Para 3-41

NOTE

If 13-inch CX-4434/U extension cable assembly is used, loosely wrap excess cable around boom swivel assembly prior to connection.

8. Connect plug of CX-4434/U extension cable assembly to receptacle of communications cable assembly.

9. Document in accordance with OPNAVINST 4790.2 Series.

3-42. Installation of M22442/37-4708 (CX-4708A/AIC) Cable Assembly and MIL-C-22442/30-1 (CX-13155/A) Cordset or M22442/30-2 (CX-13164/A) Cordset. To install the M22442/37-4708 (CX-4708A/AIC) cable assembly and MIL-C-22442/30-1 (CX-13155/A) cordset or M22442/30-2 (CX-13164/A) cordset on the PRU-59/P helmet shell assembly, proceed as follows:

Materials Required

Quantity	Description	Reference Number
1	Cable Assembly, CX-4708A/AIC (Use until exhausted)	M22442/37-4708 NIIN 00-816-3657
	-or-	
1	Cable Assembly, (CX-4708A/AIC) (MOD) (Alt. for CX-4708A/AIC)	89B7742 (CAGE 97427)
1	Cordset, CX-13155/A	MIL-C-22442/30-1 NIIN 01-128-9733
	-or-	
1	Cordset, CX-13164/A	M22442/30-2 NIIN 01-140-3501
1	Cable Clip, (Note 1)	MK-634/AIC NIIN 00-864-8047
2	Earphones	H-87B/U NIIN 01-056-7225
As Required	Adhesive, Polychloroprene, Class 3	MIL-A-5540 NIIN 00-515-2246

Notes: 1. Use of Cable Clip, MK-634/AIC is optional.

1. Pull the earcups away from the pile fastener on the inside of the helmet shell.

NOTE

Dimensions in illustration are not critical, technician should adjust location of components on helmet shell exterior to ensure interference with operation and movement of other exterior helmet components is minimized.

2. Drill hole for communications cable as follows:

a. Select a drilling location on the left side at least 1/2 inch from the nape strap screw. Ensure selected location will not interfere with installation of boom microphone on the swivel assembly. The hole position should be approximately 1 inch from the edgeroll.

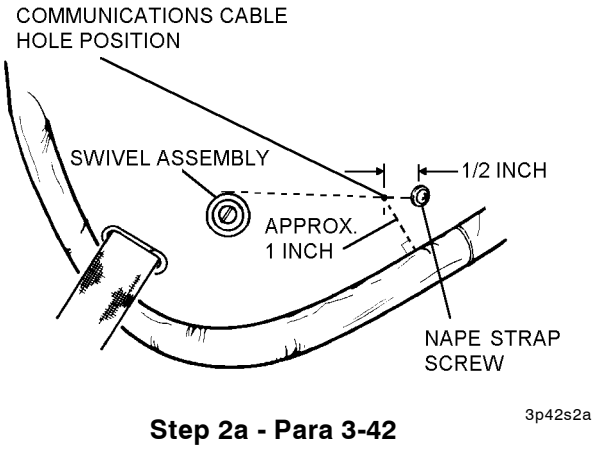

Step 2a - Para 3-42

b. Pull pile fastener fabric from the inside of the helmet, away from the drilling position.

c. Drill 3/8-inch hole at the position marked in step 2a.

d. Re-cement pile fastener fabric to the interior of the helmet shell assembly. When dry, cut a hole in the pile fastener fabric positioned to match the position of the communications cable hole drilled in step 2c.

3. Pass M22442/37-4708 (CX-4708A/AIC) cable leads with earphone contacts through large hole in bottom rear of helmet shell assembly. Press large grommet encircling cable assembly into large hole and secure.

4. Secure cable assembly connector (U-179/U) to helmet shell assembly, using MK-634/AIC cable clip.

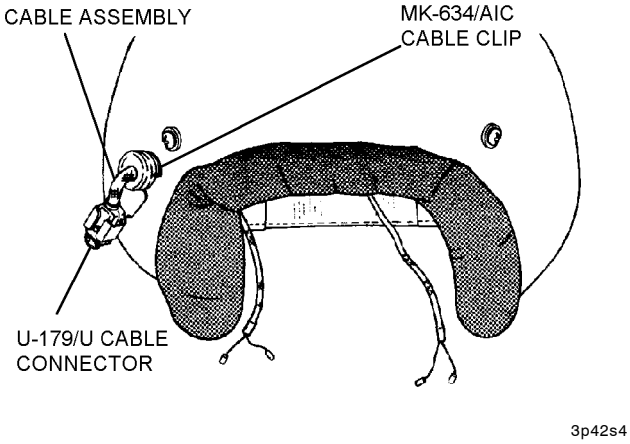

Step 4 - Para 3-42

5. As applicable, connect MIL-C-22442/30-1 (CX-13155/A) cordset or M22442/30-2 (CX-13164/A) cordset to connector (U-179/U).

6. Install earphones and earcup assemblies in accordance with paragraph 3-47.

3-43. Deleted.

3-44. Installation of M22442/15-1 (CX-4832A/AR) Cable Assembly or M22442/19-1 (CX-12972/AR) Cable Assembly. To install the M22442/15-1 (CX-4832A/AR) cable assembly or the M22442/19-1 (CX-12972/AR) cable assembly, proceed as follows:

Materials Required

Quantity	Description	Reference Number
1	Cable Assembly, CX-4832A/AR	M22442/15-1 NIIN 00-961-8516
	-or-	
1	Cable Assembly, CX-12972/AR	M22442/19-1 NIIN 01-016-4130
2	Screw, 6-32 x 1/4 Inch	MS51957-25 NIIN 00-054-6649
2	Washer	MS35338-138 NIIN 00-933-8120
1	Earphones, H-87B/U	NIIN 01-056-7225
As Required	Adhesive, Polychloroprene, Class 3	MIL-A-5540 NIIN 00-515-2246

1. Pull the earcups away from the pile fastener on the inside of the helmet shell.

NOTE

Dimensions in illustration are not critical, technician should adjust location of components on helmet shell exterior to ensure interference with operation and movement of other exterior helmet components is minimized.

2. Drill mounting holes for cable assembly as follows:

a. Fabricate a template from the illustration below.

NOTE

Illustration below is to scale. A copy may be used as the template.

b. Select a drilling location on the left side of the helmet. Selected location should not interfere with boom microphone installation and should permit junction block of cable assembly to lie flush on helmet shell exterior.

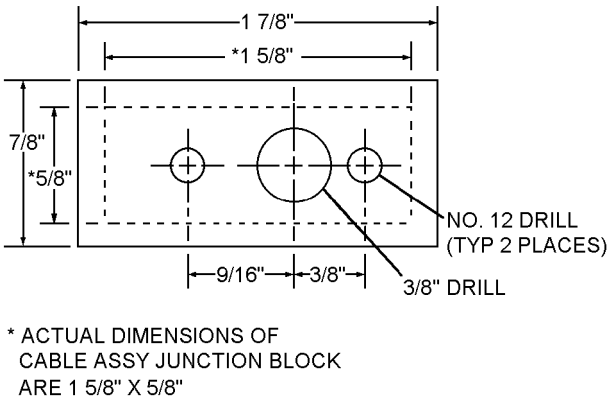

3p44s2a

Step 2a - Para 3-44

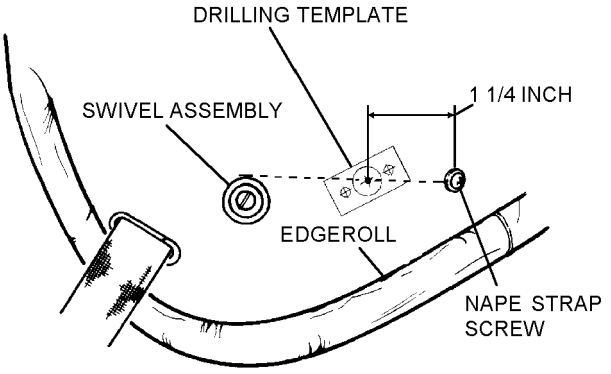

3p44s2b

Step 2b - Para 3-44

c. Pull pile fastener fabric from the inside of the helmet, away from the drilling position.

d. Drill center hole with a 3/8-inch drill in the outer shell assembly from the outside.

e. Drill the mounting holes with a No. 12 (0.189-inch) drill in the outer shell assembly from outside.

f. Re-cement pile fastener fabric to the interior of the helmet shell assembly. When dry, cut a hole in the pile fastener fabric positioned to match the position of the communications cable hole drilled in step 2d.

3. Install cable assembly as follows:

a. Pass four cable assembly earphone leads with earphone contacts through 3/8-inch hole on left side of helmet shell assembly.

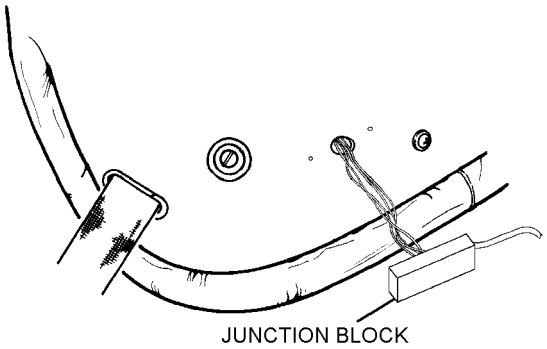

3p44s3a

Step 3a - Para 3-44

CAUTION

Do not over torque 6-32 x 1/4-inch screws. Over torquing will cause damage to the cable assembly junction block.

b. Secure cable assembly junction block to outside of helmet, using two 6-32 x 1/4-inch screws and two 0.032-inch thick flat washers. Apply no more than 4 in-lbs. of torque to 6-32 x 1/4-inch screws.

4. Install earphones and earcup assemblies in accordance with paragraph 3-47.

3-44A. Installation of Tempest Communication Cable and MJS-103 Switching Assembly (MK-1564/AIC). To install the MK-1564/AIC Tempest Communications Cable and the MJS-103 Switching Assembly, proceed as follows:

Materials Required

Quantity	Description	Reference Number
1	Tempest Communications Cable, with MJS-103 Switching Assembly	MK-1564/AIC NIIN 01-164-0561
1	Hardware Kit	89A7762-2
1	Clamp, Loop	BL1844-3
1	Clamp, Loop	MS25281-R2
As Required	Adhesive, Polychloroprene, Class 3	MIL-A-5540 NIIN 00-515-2246

NOTE

Communications assembly, P/N MK-1564/AIC, is delivered with earcups, earphones and earphone holders attached. The earcups and earphone holders are not used for this configuration and must be removed prior to proceeding with this installation.

1. Helmet Preparation for Installation of the MK-1564/AIC Communications Cable and the MJS-103 Switching Assembly.

a. If installed, detach visor from helmet, and set aside for reinstallation.

b. Remove internal components, if installed, in accordance with paragraph 3-94, step 1, sub-paragraphs b. through i. Detach leather covering edgeroll at the nape area on helmet shell interior.

c. Remove existing communications cable, if installed and discard.

d. Remove boom microphone assembly, if installed and set aside for use during reinstallation.

e. Detach pile fastener material from interior surface of the left helmet shell earcup cavity and position clear of work area.

NOTE

Adjust the location of the MJS-103 switching assembly on the helmet surface to a position that does not interfere with Boom Microphone operation.

f. On helmet shell exterior, from the center of the visor snap fastener stud, measure downward toward the edgeroll 2 1/8 inches on the size medium helmet, 2 7/8 inches for the size large helmet and 3 inches for sizes extra large and extra large wide helmets and place a mark indicating location of the upper switching assembly attaching screw.

g. From location marked in step f above, measure downward 3/16 inch and place a mark to indicate location of lower attaching screw.

h. At selected locations on helmet shell exterior, using a no. 41 drill bit, drill inward through helmet shell. Deburr holes using a jeweler's file.

i. Location of communications cable strain relief clip mounting screw is determined by measuring, from the center of the left rear integrated chin/nape strap attaching point screw hole, upward 1 1/4 inch on the helmet shell exterior and placing a mark.

j. At marked location, using a no. 12 (0.189-inch) bit, drill inward through helmet shell. Using a jeweler's file, deburr hole.

2. Installation of the MK-1564/AIC Communications Cable and the MJS-103 Switching Assembly.

a. On interior surface of left helmet shell earcup cavity, position one of the circular backing plates over the holes drilled in step h above. Pass switching assembly attaching screws outward through backing plate and helmet shell. Place second backing plate over protruding screws.

b. Align threaded mounting holes in the body of the MJS-103 communications switching assembly over attaching screws, ensuring the function switching lever arm points downward. While maintaining alignment, tighten attaching screws.

c. Route strain relief clamp and earphone connector leads of the branched communications cable into the helmet shell interior at the left rear corner of the helmet nape edgeroll.

d. Install strain relief clamp onto interior of helmet shell using a T-nut, flat washer and screw from kit P/N 89A7762-2 at location drilled in step j above. Adjust strain relief cord to proper length and trim off excess cord.

NOTE

The longer earphone leads must be positioned leading to the right earcup.

e. Assemble left and right earcups in accordance with instructions contained in paragraph 3-47, steps 1 through 11.

f. Route free end of communications cable, from left to right, across helmet nape edgeroll foam core exiting the helmet interior at the right rear corner.

g. Apply a coat of polychloroprene adhesive to the helmet shell interior surface where the leather edgeroll covering was detached. Allow adhesive to dry (approximately 30 minutes).

h. Apply a coat of adhesive to the underside of the leather edgeroll and apply a second coat, over the first coat, on the helmet shell interior. Allow adhesive to become tacky (approximately 15 minutes).

i. While ensuring communications cable remains positioned along upper surface of the foam core, press leather edgeroll cover firmly into place, onto the prepared area of the helmet shell.

NOTE

When using clamp loops to secure switching assembly communications cable to the helmet shell exterior omit external flat washers from the integrated chin/nape strap rear attaching point assemblies.

j. Apply adhesive to interior surface of left earcup cavity and allow to dry. Apply adhesive to underside of earcup cavity pile fastener material and apply a second coat of adhesive to the helmet earcup cavity. Allow adhesive to become tacky. Press pile fastener material firmly into place in earcup cavity.

k. Reinstall internal components in accordance with paragraph 3-94, steps 2 through 4 and steps 6 through 10.

l. Install switching assembly boom microphone onto helmet boom swivel in accordance with paragraph 3-47, steps 1 through 6.

m. Contact aircrewmember to schedule a post maintenance helmet fit verification.

n. Make necessary entries on appropriate form in accordance with OPNAVINST 4790.2 series manual.

3-45. Installation of Amp Mounting Bracket (As Applicable).

Materials Required

Quantity	Description	Reference Number
1	Amp Mounting Bracket	80B4881 (CAGE 97427) NIIN 01-128-5334
As Required	Adhesive, Polychloroprene, Class 3	MIL-A-5540 NIIN 00-515-2246
As Required	Adhesive, RTV 102/732	MIL-A-46106 NIIN 00-877-9872

NOTE

Dimensions given are not critical. Adjust location of hole with respect to the positioning of the boom swivel assembly.

1. Locate position for amp mounting bracket on left side of helmet. Ensure location of amp mounting bracket will not interfere with microphone boom and will permit bracket with enclosed amp to lie flush with helmet surface.

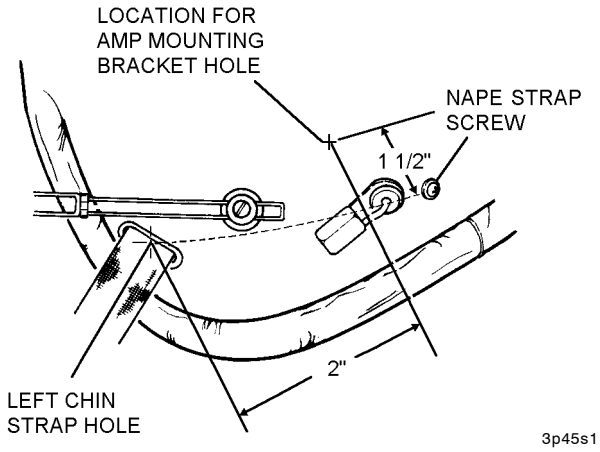

Step 1 - Para 3-45

2. Drill a 0.288-inch (no. 1 drill bit) hole at location determined.

NOTE

A small amount of RTV may be applied to the first few threads of screws prior to installation.

3. Secure amp mounting bracket to helmet shell assembly with 8-32 x 1/4-inch screw, flat washer, and post. Do not tighten screw.

4. Re-cement pile fastener tape to helmet shell using polychloroprene adhesive.

3-46. Installation of M23595/1-2 (AM-3597C/A) Amplifier (As Applicable).

Materials Required

Quantity	Description	Reference Number
1	Amplifier, AM-3597C/A	M23595/1-2 NIIN 00-100-4932

1. Ensure Amp Mounting Bracket is installed in accordance with paragraph 3-45.

2. Connect amplifier to CX-4434/U cable assembly.

3. Install amplifier into amp mounting bracket and tighten screw.

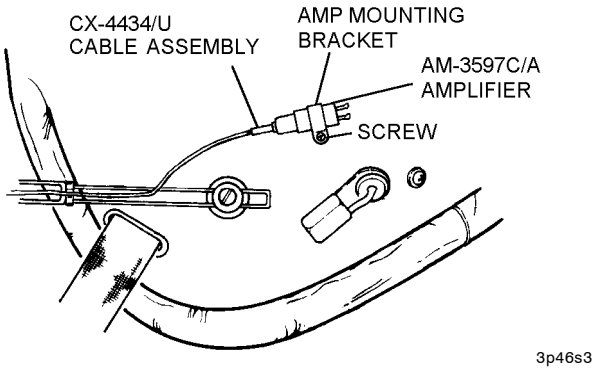

Step 3 - Para 3-46

4. Document in accordance with OPNAVINST 4790.2 Series.

3-47. Installation of Earphones and Earcup Assemblies. The radio frequency (communications) cable assembly must first be routed into the earcups and connected to the earphones, then the earcups are assembled. To install the earphones into the RH and LH earcup assemblies, proceed as follows:

Materials Required

Quantity	Description	Reference Number
2	Earphones	H-87B/U NIIN 01-056-7225
1	Earcup Assembly	90C7885
1	Oregon Aero Softseal, 3/4-inch (Note 1)	20050
	-or-	
1	Oregon Aero Softseal, 1 1/8-inch (Note 1)	20025

Notes: 1. Oregon Aero Softseal ear cushions are authorized optional replacements for P/N 88C7589 earseals and if desired must be commercially procured from Oregon Aero Corporation, Scappoose, OR 97056. Telephone (503) 543-7399.

CAUTION

Due to inadequate lateral impact protection afforded by this configuration, Oregon Aero Hush Kit combo part number 28034 and part number 28118 are not authorized for use in the HGU-84/P Series or the HGU-67/P Protective Helmets.

1. Retrieve RH and LH earcup assemblies which were removed from helmet subassembly at beginning of build-up procedures.

2. Remove earseal by carefully stretching it away from lip of each earcup.

3. Remove earphone holder from each earcup.

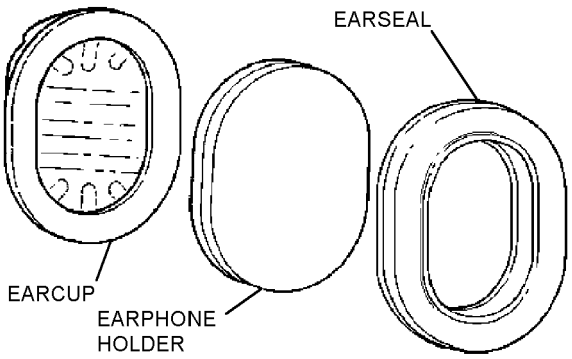

3p47s2

Steps 2 and 3 - Para 3-47

NOTE

The RH and LH earcups can be distinguished by their positions inside the helmet assembly. The tapered ends of the earcups should face down. The small holes for the communications cable leads and grommet should face to the rear of the helmet assembly.

The longer communications cable lead must connect to the RH earcup.

4. Insert the LH and RH earphone leads through the small grommets. Press leads and grommets into holes of LH and RH earcups. Ensure grommets are secure.

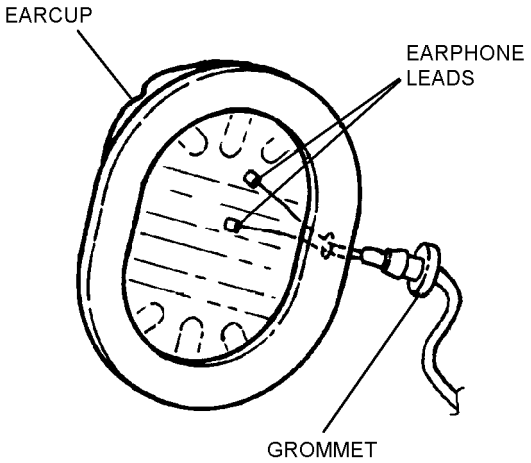

3p47s4

Step 4 - Para 3-47

5. Insert earphone leads into earphones and tighten setscrews.

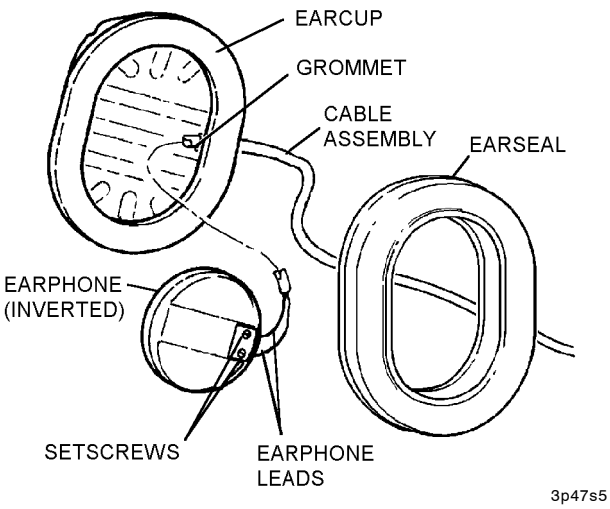

Step 5 - Para 3-47

6. Insert earphones into cavity of earphone holders.

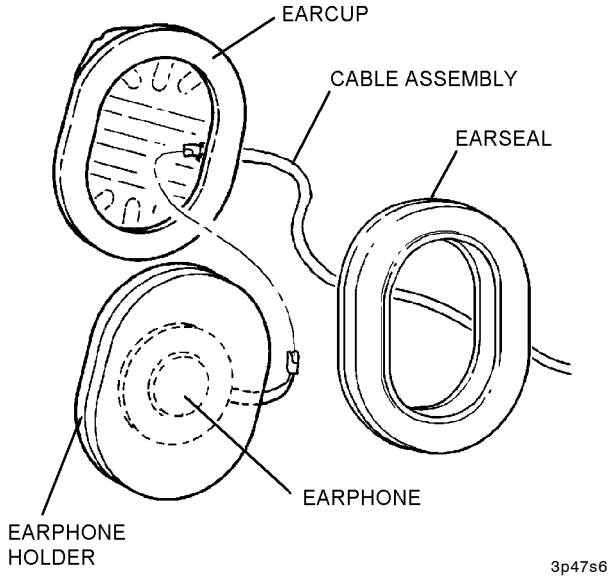

Step 6 - Para 3-47

7. Position earphone holders with enclosed earphones into LH and RH earcups. Smooth earphone holders inside earcups to prevent bunching.

8. Install P/N 88C7589 or 98C10311-1 earseals or optional Oregon Aero Softseal earseals by hooking them over one end of the earcup and carefully stretching them over the lip of the earcup.

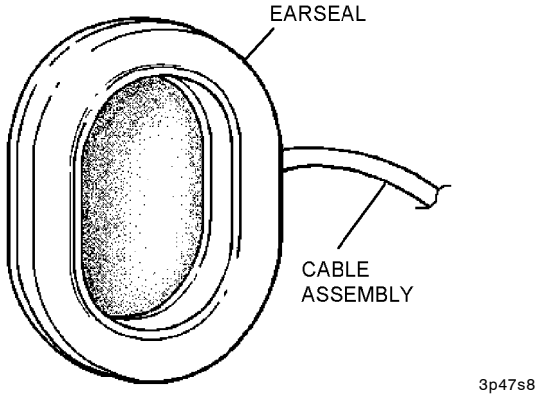

Step 8 - Para 3-47

9. Route RH earcup and cable around inside nape of helmet to RH side of helmet.

NOTE

Proper fitting of the earcup assembly inside the helmet assembly is not required at this time.

10. Install RH and LH earcup assemblies onto pile sections of the interior helmet assembly.

11. Document in accordance with OPNAVINST 4790.2 Series.

3-47A. Installation of Optional Communications Ear Plug (CEP) into HGU-84/P Series and HGU-67/P Helmets. The CEP is a device that provides the hearing protection of an expanding foam earplug while directly passing into the ear the clearest speech signal attainable. A miniature transducer and foam earplug are coupled to yield a light weight, high quality communications device. To install the CEP into the HGU-84/P series and HGU-67/P helmets, proceed as follows:

Support Equipment Required

Quantity	Description	Reference Number
1	Tape Measure, Dress Maker's	NIIN 00-782-3520
1	No. 12 Drill Bit	NIIN 00-189-9253
1	3/8 Inch Drill Bit	NIIN 00-227-9666

Materials Required

Quantity	Description	Reference Number
1	CEP Wiring Harness	CEP900-I04E (Note 1)
1	Audio/Ear Plug Cable	CEP402-C05
AR	Foam Tip,	
	Standard	CEP199-ESTP
	Slim	CEP199-ESLP
	Short	CEP199-ESHP

Notes: 1. CEP components are commercially available from:
Communications & Ear Protection
P.O. Box 311174
3700 Salem Road
Enterprise, AL 36331-1174
Telephone (334) 347-1688.

NOTE

The right or left side of the helmet is determined by referring to the right or left side of the person wearing the helmet.

1. Place helmet on the work surface facing the technician, with the right side upright.

2. Remove the screw, washer, lock washer and knurled nut holding the right side of the nape strap and remove nape strap from the helmet. Reinstall removed hardware onto nape strap to prevent loss.

3. Remove the right side ear cup and any padded spacers from the helmet extending the ear cup and wiring from the rear of the helmet onto the work surface.

4. Using a cloth tape measure as a guide, draw a line using a No. 2 lead pencil from the center of the nape strap screw hole toward the rear edge of the oblong chin/nape pass through grommet. This is the CEP connector installation reference line.

5. Using the No. 2 pencil, place a mark 1 1/4 inches from the center of the nape strap screw hole on the reference line.

6. Using a No. 12 drill bit, drill a pilot hole on the 1 1/4-inch mark, ensure drill bit is kept perpendicular to the helmet surface while drilling. Enlarge the previously drilled hole using a 3/8-inch drill bit.

7. If necessary, use a small jeweler's file to deburr the edges of the drilled hole.

8. Thread the CEP wiring harness into the helmet interior through the 3/8-inch hole starting with the earphone pins, wrap the ground wire along or around the cable as you pass the cable through the hole.

9. Place the ABS spacer and connector into the hole pressing with your thumb so that they both are seated flush to the outside of the helmet.

10. On the inside of the helmet, feed the cable and ground wire through the ground lug and the CEP connector locking nut until the ground lug is flush to the inside of the helmet shell and the locking nut is in contact with the threads of the CEP connector.

NOTE

It may be necessary to trim the Velcro around the connector threads in order for the locking nut to be seated to the connector threads.

11. Align the ground lug so that the solder tab is pointed toward the crown of the helmet and tighten the locking nut to the connector using a 7/16-inch wrench.

12. Pull the solder tab on the ground lug up and away from the Velcro surface of the helmet.

13. Using a small pair of needle nose pliers, make a small hook in the ground wire and feed the wire through the solder tab hole, making sure the ground wire and not its insulation is contacting the ground tab.

14. Add flux to exposed area of ground wire and carefully solder the wire in place.

15. When the surface has cooled, press the solder tab and ground wire back down to the Velcro of the helmet shell.

16. Remove earphone and protective foam from the right ear cup.

17. Remove the protective foam from the earphone and position the earphone so the setscrews of the earphone are facing up.

18. Loosen the setscrews on the earphone until the cable pins are released and remove earphone leads and rubber grommet encircling the communications cable from ear cup. Set earphone aside for reinstallation.

19. Route CEP cable through the ear cup hole inserting the interface pins of the CEP into the earphone. Tighten the earphone setscrews so that the setscrews of the interface pins are facing up.

20. Route the communications cord through the ear cup hole and carefully loosen the setscrews on the interface pins. Insert the earphone pins from the helmet installed communications cord into the CEP interface pins and tighten the setscrews.

21. Encircle both sets of wires with the split rubber grommet and insert the grommet and encircled wires into the hole of the ear cup.

NOTE

When using communications cords with black and white wires, match them to the CEP interface wires for polarity.

22. Re-install earphone into protective foam and ear cup, and reinstall ear cup back into the helmet.

23. Using the screw, washer, lock washer and knurled nut, reattach right side nape strap to helmet.

24. Perform post maintenance communications test using a TTU-489/E or equivalent.

25. Contact aircrew for post maintenance fit check.

26. Document maintenance in accordance with OPNAVINST 4790.2 Series.

3-47B. Communications Ear Plug (CEP) Fitting and Sizing. The CEP foam tips attach to the ear plugs of the audio/ear plug cable, and are available in three sizes: Standard, Slim, and Short.

1. To attach the foam tip to the ear plug, proceed as follows:

a. Carefully thread the foam tip onto the ear plug until the foam touches the black housing.

b. Grip the housing and the foam tip and tighten an additional 1/4 turn. This will ensure that flanking sound paths are minimized.

CAUTION

Do not over tighten foam tip. Over tightening could damage the threads and result in the foam tip becoming lodged in the ear cavity upon removal of the ear plug.

NOTE

Due to the variations in the sizes of the ear canal, determining the correct size foam tip for comfort and protection may require several flights with different sizes of foam tips.

2. To insert the ear plug into the wearer's ear, proceed as follows:

a. Place the audio/ear plug cable around the back of the neck with the long wire running toward the left ear.

b. Compress and roll the foam tip of the left side ear plug with the thumb and index finger of the right hand, forming a cylinder shape.

NOTE

Pinching or crimping the end of the foam tip may impede audio to the wearer resulting in muffled or unclear reception.

c. Grasp the black housing of the CEP in your left hand so the cable is between the thumb and index finger.

d. Quickly release the foam from the right thumb and index finger and reach behind the head and pull the left external ear away from the head.

e. Insert the compressed foam tip into the ear until the foam is completely in the ear canal, and hold in place for approximately 5 seconds.

f. Position the cable so that it exits through the notch at the lower part of the external ear.

g. Reversing the procedure, fit the right side in the same manner.

h. Don the helmet and plug the audio/ear plug cable into the CEP harness connector on the helmet.

3-48. INSTALLATION OF VISOR ASSEMBLIES AND VISOR COVER.

Materials Required

Quantity	Description	Reference Number
1	Visor Assemblies	(Note 1)
1	Visor Bag	93D8497
1	Black Leather Lens Cover	93B8447
As Required	Thread, Nylon, Size E	V-T-295

Notes: 1. Table 3-1A lists all visors available for the HGU-84/P series helmets.

CAUTION

Avoid scratching the visor with objects such as rings, watches, buckles, tools, or bench surfaces.

When installing or repositioning visors, always lift visor away from helmet. To prevent scratching lens, do not pull visor across mounting block on brow of helmet. Do not bend or flex visor or damage may result.

1. Remove visors from protective packaging.

2. For dual visor configuration, position inner clear visor assembly on the helmet lens pad rest. Maintain visor position on pad and stretch visor elastic retention strap slightly past the installed helmet snap fastener stud. Fasten retention strap socket to the helmet stud from bottom to top. Repeat for opposite strap.

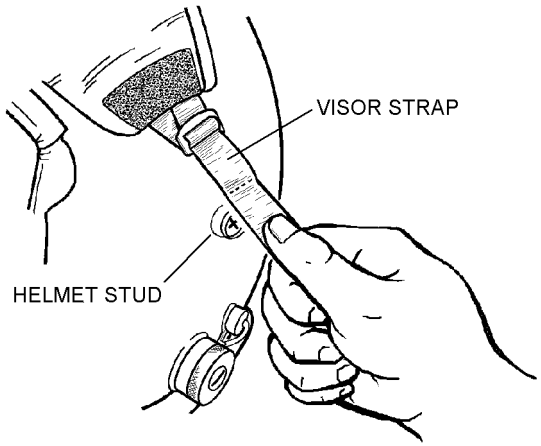

Step 2 - Para 3-48

3p48s2

NOTE

If desired by aircrewmember, after proper tension is achieved, adjustment strap friction adapters may be tacked using Size E nylon thread, single, two turns tied off with a surgeon's knot followed by a square knot.

3. Adjust strap tension, on both retention straps, as desired. Once desired tension is achieved, tack retention strap friction adapters to prevent slippage or loosening during use.

NOTE

In addition to the standard neutral outer visor, four special purpose outer visors, procured separately, are authorized for use. The amber visor is a day use only visor and provides enhanced visual acuity under hazy conditions. The gradient visor provides glare protection similar to the neutral visor, but the clear area along the lower portion of the lens allows an unobstructed down-look capability for rapid scan of cockpit instruments and is limited to day use only. The reduced profile safety visor, stepped-in provides eye protection for aircrewmembers utilizing the AN/AVS-9(V)R Night Vision Image Intensifier Sets.

4. Select the neutral visor or any of the four special purpose visors for installation as the outer visor. Lower the inner visor to the in-use position. Place the selected outer visor on the lens pad and attach the retention strap socket to the stud on the inner visor retention strap. Snap fasteners secure from top to bottom.

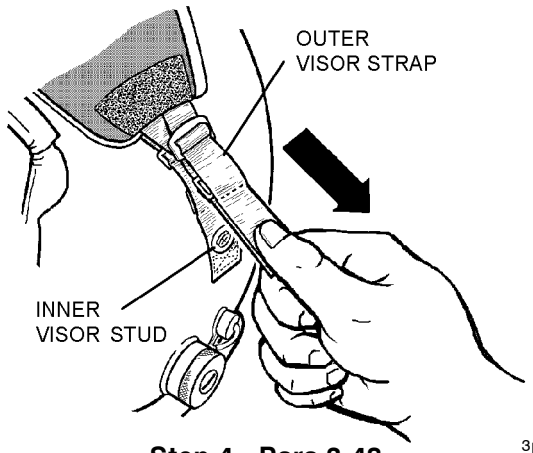

Step 4 - Para 3-48

3p48s4

5. Adjust strap tension, on both retention straps, as desired. Once desired tension is achieved, tack retention strap friction adapters to prevent slippage or loosening during use.

6. Install visor protective cloth cover onto the outer visor by mating the hook fastener strips on the underside of the lens cover with the pile fastener strips on the edges of the outer visor.

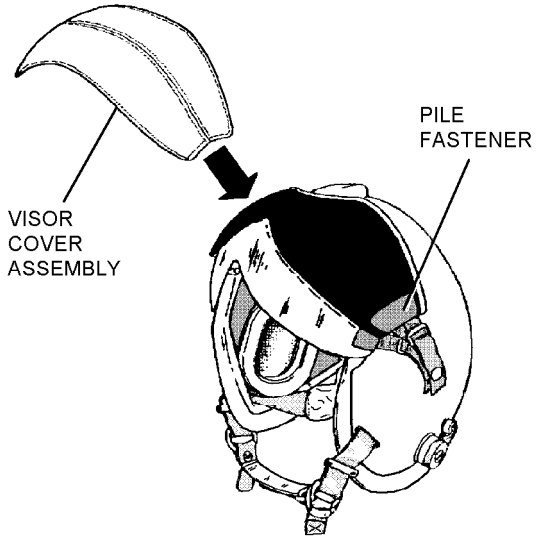

Step 6 - Para 3-48

3p48s6

7. For single visor applications, place unused visor in the visor bag provided as part of the helmet assembly.

CAUTION

When removing, installing, or re-positioning visors, always lift visor away from helmet. To prevent scratching lens, do not pull visor across mounting block on brow of helmet.

NOTE

To prevent scratching, lenses should be stored in lens bags provided, or covered with visor cover when not in use.

8. Document in accordance with OPNAVINST 4790.2 Series.

3-49. INSTALLATION OF BAYONET RECEIVER ASSEMBLY (HGU-67/P OR HGU-84/P). To install the bayonet receiver assemblies for high altitude SAR or for use in V-22, AH-1W, or KC-130 aircraft, refer to Chapter 5 (MBU-12/P Series) or Chapter 6 (MBU-23/P Series).

3-50. BUILDUP OF QUICK DON MOUNT ASSEMBLY. The Quick Don Mount Assembly connects the standard NVIIS accessory to the helmet block on the brow of the helmet, allowing for quick attachment and release with one hand. The mount provides vertical adjustment and electrical connections for the goggles. The quick don mount is assembled using components removed from the AN/AVS-6(V)1 or (V)2 mount assemblies combined with parts contained in kit P/N 93B8601.

Materials Required

Quantity	Description	Reference Number
1	Mounting Block Assembly	3151AS151-1 (From kit 93B8601)
1	Mount Assembly	(AN/AVS-6(V)1 or AN/AVS-6(V)2) and 5002530 NIIN 01-151-4229
As Required	Adhesive, RTV 102/732	MIL-A-46106 NIIN 00-877-9872

NOTE

Components are removed from existing AN/AVS-6(V)1 or (V)2 mount assemblies and combined with new mounting block assembly (3151AS151-1) to produce the AN/AVS-6(V)3 quick don mount assembly.

1. Remove AN/AVS-6(V)1 or (V)2 mount assembly from aircrewmember's helmet if functional, or procure an RFI mount assembly from supply.

2. Invert mount assembly on work surface and remove the AN/AVS-6 housing assembly from the AN/AVS-6(V)1 or (V)2 mount by removing the four attaching screws on the inner surface of the visor cover.

3. Dislodge rubber grommet encircling the electrical cable connector to permit withdrawal of the AN/AVS-6 housing assembly and attached wiring harness from the visor cover.

4. Remove lock release button from left side of AN/AVS-6 housing assembly by turning button counterclockwise until free. Set aside button for re-use in assembly of AN/AVS-6(V)3.

5. Remove two screws securing the contact terminal junction cover plate to the left forward portion of the AN/AVS-6housing. Set aside cover plate and screws for re-use.

6. Remove the aft screw securing the contact terminal block to the left side of the AN/AVS-6 housing assembly and set aside for re-use.

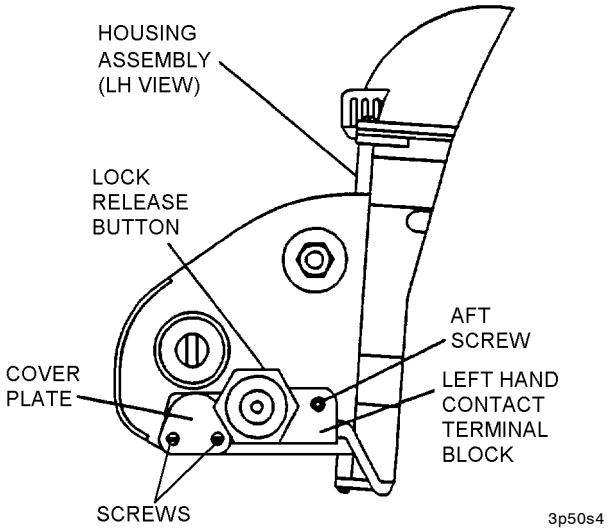

Steps 4 thru 6 - Para 3-50

7. Remove left hand contact terminal block from housing.

CAUTION

Hold RH module assembly in position until all three screws are removed. Compression spring under contact housing will force module assembly upward, damaging screw threads.

8. Repeat procedure on right hand contact terminal block, retaining the cover plate, three screws, and lock release compression spring under the right terminal block for re-use.

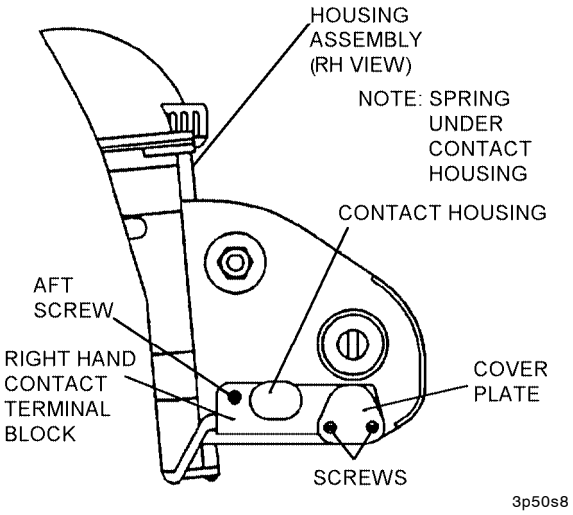

Step 8 - Para 3-50

9. Dislodge red Light Emitting Diode (LED) from channel on rear of housing assembly, and remove the AN/AVS-6(V)1 or (V)2 wiring harness from the AN/AVS-6 housing assembly.

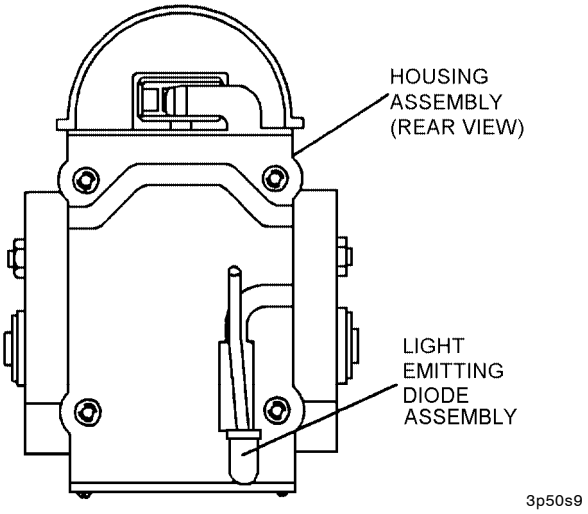

Step 9 - Para 3-50

NOTE

The AN/AVS-6(V)1 or (V)2 wiring harness may be retained for use in repairing any defective helmet systems requiring only a harness to make them RFI.

10. Place mounting block assembly (P/N 3151AS151-1) on work surface with wiring and wiring channels upward, quick release plunger away from technician and small end of tapered face toward the technician. Note wire positioning. The upper two left hand wires (yellow and brown) comprise the left contact terminal block cable The upper two right hand wires (red and black) comprise the right contact terminal block cable. The lower wire pair (white and green) comprise the LED power cable.

11. Route the left and right contact block cables into the left and right cable channels on the tapered face of the mounting block assembly. To ensure full travel of the AN/AVS-6 housing, align edge of each cable's heat shrink wrapping with the upper edge of cable channel.

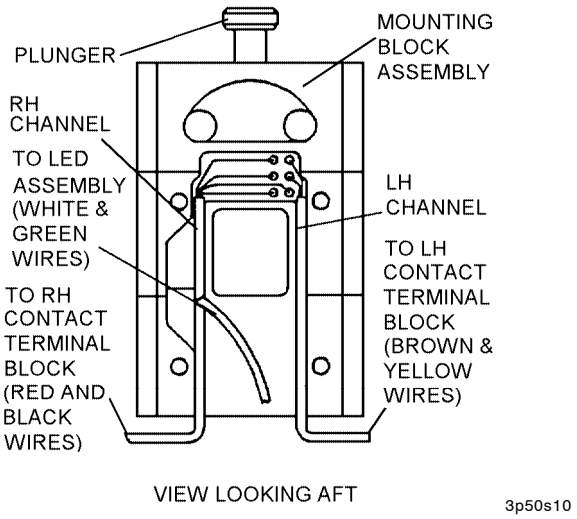

Steps 10 and 11 - Para 3-50

CAUTION

Orient the flat on LED assembly upward in channel to prevent crushing damage to the LED.

12. Position LED and its power cable into the channel on rear of the AN/AVS-6 housing assembly.

13. Align housing assembly screw holes with screw holes on tapered face of the mounting block assembly while the LED view port is facing towards the technician.

NOTE

Use screws and washers provided in modification kit.

Place a small amount of MIL-A-46106 adhesive on the first few threads of each screw.

14. While maintaining alignment, from the rear, install screws and washers provided in the modification kit, ensuring that the longer screws are installed in the upper screw holes and the shorter screws in the lower holes.

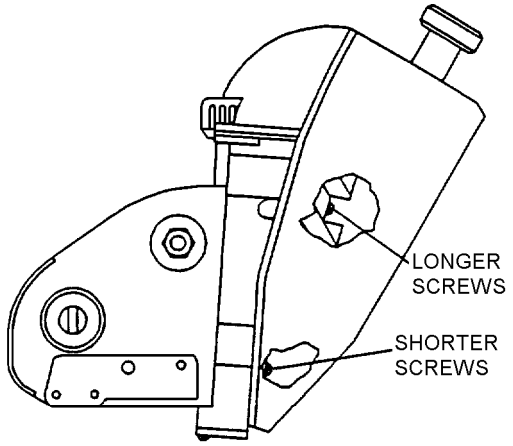

3p50s14

Step 14 - Para 3-50

CAUTION

Ensure protective sleeving remains in groove of terminal block.

Hold right hand contact terminal block in position until all three screws are installed. Compression spring under contact housing will force terminal block upward, damaging screw threads.

15. Insert the lock release compression spring into hole on the right side of the AN/AVS-6 housing assembly, and install the right hand contact terminal block using the 3 screws and cover plate removed in step 8.

CAUTION

Ensure protective sleeving remains in groove of terminal block.

16. Install the left hand contact terminal block using 3 screws and cover plate removed in step 6.

NOTE

Place a small amount of RTV adhesive on the first few threads of lock release button.

17. Install lock release button removed in step 4 by turning the button clockwise until tight.

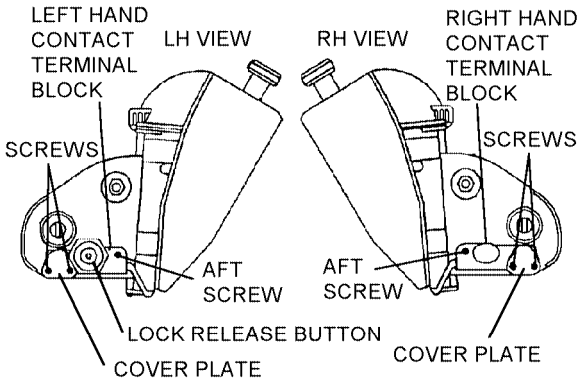

3p50s16

Steps 16 and 17 - Para 3-50

18. Attach assembled AN/AVS-6(V)3 Quick Don Mount to the helmet block and using the vertical height adjustment knob, verify full range of travel is available. If not, bunching of the contact terminal block cable should be suspected. To correct bunching, loosen four screws on rear of mounting block assembly and tug lightly on each contact terminal block cable. Tighten the screws and check again for full travel.

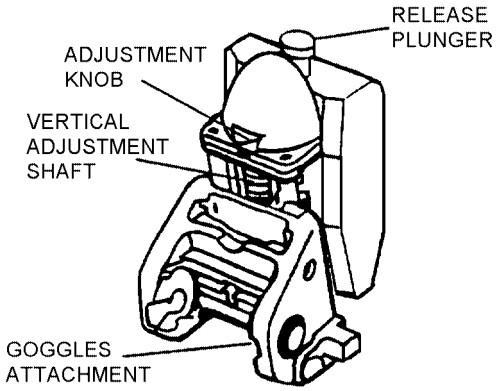

3p50s18

Step 18 - Para 3-50

19. Store the quick don mount assembly in accordance with paragraph 3-106.

20. Document in accordance with OPNAVINST 4790.2 Series.

3-51. HELMET FITTING PROCEDURES. The following text contains instructions for fitting the helmet to the aircrewmember. These procedures include earcup positioning, chin/nape strap adjustment and tensioning, visor assembly adjustment and tacking, TPL layer removal, TPL custom-fitting (heat forming), and installation of the optional Oregon Aero Zetaliner. Proper fitting of the helmet is essential for helmet stability and aircrewmember comfort as well as ensuring that the NVIIS and HSA accessories can be properly positioned. Once a satisfactory helmet fit has been achieved, the NVIIS alignment check and helmet sighting assembly boresight are performed.

NOTE

As an additional aid in achieving safe, comfortable fit the use of the skull cap is authorized. The skull caps also absorb perspiration and when worn, assist in proper positioning of the helmet during donning by protecting the aircrewmember's ears. They are available through normal supply channels under P/N 765AS270-101 (size medium), NIIN 01-077-8909 or P/N 765AS271-101 (size large), NIIN 01-077-8910.

3-52. Installation of TPL Assembly. To install the TPL assembly to the helmet assembly, proceed as follows:

Materials Required

Quantity	Description	Reference Number
As Required	Tape, Pressure Sensitive Adhesive	A-A-1243 NIIN 00-782-6220

1. If four 1-inch x 2-inch pressure-sensitive hook fastener tabs are not present on the inside surface of the energy absorbing liner, installation is required.

a. Install two tabs on the inside front of the energy absorbing liner left and right of center over the eyes, 1/8 inch from front edge of the liner.

b. Install two tabs in the rear approximately 1 1/2 inch left and right of center and 1/2 inch from the bottom edge of the liner.

2. To prevent bunching of TPL cover fabric, secure the TPL cover to the preformed layer assembly using four 1-inch x 2-inch pieces of double-sided tape. Position tape strips with the 2-inch length horizontal at the front, rear, and both sides of the preformed layer assembly under the cover fabric overlap. The single seam is positioned to the rear. Press cover into place over the tape strips.

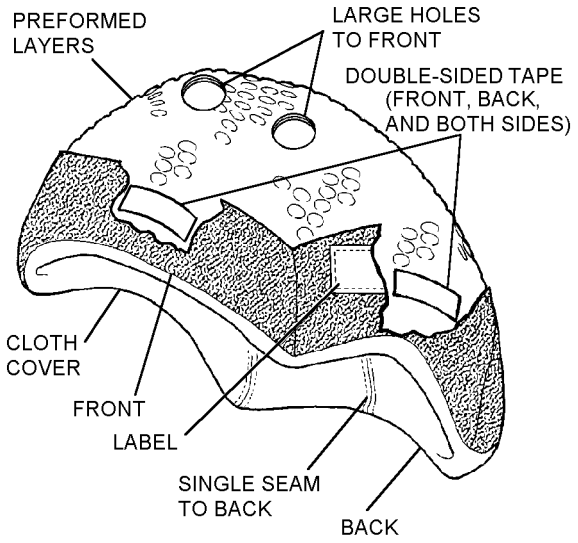

3p52s2

Step 2 - Para 3-52

3. Place the TPL inside the helmet shell by squeezing the TPL sides together to clear the earcups. Ensure that large holes on top of the TPL are facing forward. Release TPL, and attach liner cover to hook fastener tabs.

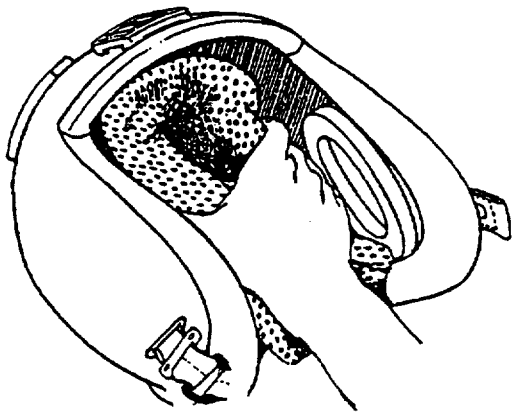

3p52s3

Step 3 - Para 3-52

4. Ensure that the front edge of the TPL is aligned with the front edge of the energy-absorbing liner inside the helmet and that the TPL is centered in the helmet.

3-53. Helmet Fitting.

1. Have the aircrewmember don the helmet as follows:

CAUTION

Spread helmet only enough to allow ease of donning and doffing. Excessive spreading may damage helmet.

a. Hook thumbs in earcups and spread helmet slightly.

b. Place edgeroll on helmet brow against forehead.

c. Rotate helmet toward the rear and down onto head.

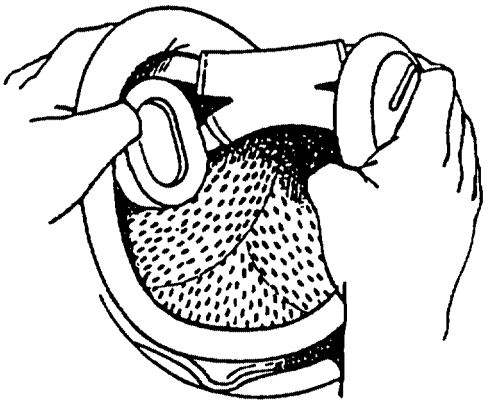

3p53s1a

Steps 1a thru 1c - Para 3-53

NOTE

The edgeroll on the helmet brow should be positioned just out of the aircrewmember's line of sight as the aircrewmember looks upward.

2. Rotate the helmet toward the rear until the edgeroll on the brow is out of the field-of-view.

3. Check earcup position, ensuring that the earseals completely surround the ears.

4. Check earseal compression. If necessary, adjust compression by adding earcup spacer pads.

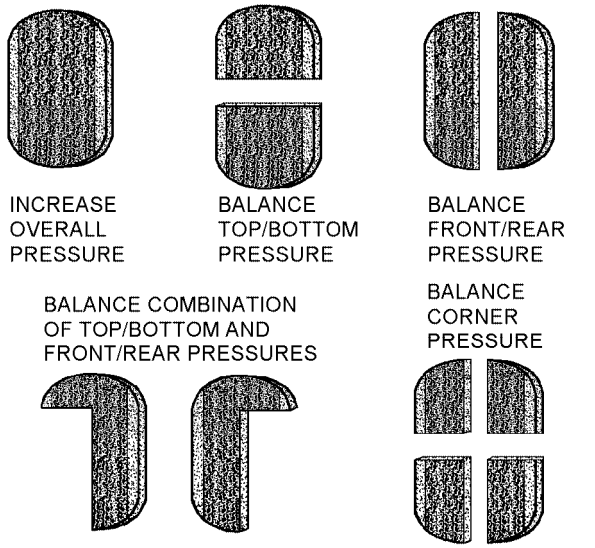

3p53s4

Step 4 - Para 3-53

NOTE

For optimum sound attenuation and comfort, the earseals should be compressed to about half of their original thickness.

Earcup spacer pads can be used whole, cut into quarters, or cut in half lengthwise or crosswise.

Use of clamps is optional.

Due to anatomical variations, e.g.; unusual head breadth, thick/muscular neck, some aircrewmembers will be unable to don the helmet with the barrel clamps installed. In these instances removal of the clamps from the integrated chin/nape strap is authorized.

5. Loosen clamp screws, and slide clamps down as far as possible on the nape strap. Adjust the nape straps for a snug fit. Slide the clamps upward until they contact the shell, and tighten the screws. Clamps will now hold adjusted nape straps in place.

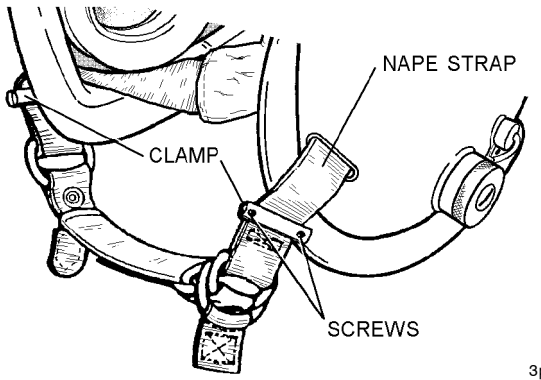

3p53s5

Step 5 - Para 3-53

6. If you cannot achieve a snug fit by adjusting the nape straps, install spacer pads (supplied with the helmet) as needed between the nape pad and the TPL.

7. If not already done, insert the end of the chin strap through the single D-ring and fasten the strap.

8. Have the aircrewmember fasten the chin strap as follows:

a. Feed the end of the chin strap through the D-rings on the left side of the helmet.

b. Split the D-rings and loop the end of the chin strap through the inner D-ring.

c. Tighten the chin strap to the desired tension. Once the desired tension is attained, the chin strap can be fastened and unfastened via the snap fastener and stud on opposite end of the chin strap.

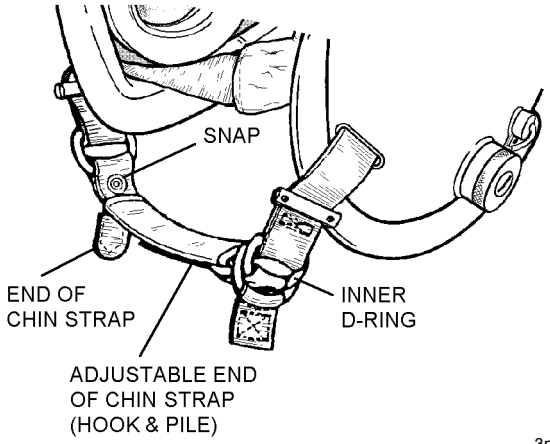

Steps 8a thru 8c - Para 3-53

NOTE

Ensure that the end of the chin strap is fastened at all times when the helmet is worn.

9. Attach the end of the chin strap to the chin pad by engaging the hook fastener on the chin strap to the pile fastener on the chin pad.

10. Adjust the inner and outer visor straps so that the visors slide easily over the helmet, yet stay in place.

11. Raise and lower the visors to check proper operation. Once adjusted to satisfactory tension, visor straps can be tacked with 2 turns of Size E thread single, to prevent slippage of loosening during use.

12. After a trial wearing period of approximately 30 minutes, have the aircrewmember evaluate the helmet fit. If the aircrewmember is satisfied with the fit, follow procedures in paragraph 3-56 for NVIIS alignment check and 3-57 for boresighting the Helmet Sight Assembly (HSA) as necessary. If the helmet does not fit properly, (i.e. pressure points exist, the helmet is too tight or sits high on aircrewmembers head, or aircrewmember complains of hot spots) have aircrewmember describe and point out areas where the problem is located. Take note of the location, size and shape of any exposed skin areas that appear irritated (red coloration or grooves in soft tissue of the scalp). To correct these fit problems, follow paragraph 3-54 procedures for fitting the TPL assembly.

3-54. Fitting the TPL Assembly. To fit the TPL assembly to the aircrewmembers, proceed as follows:

NOTE

Remove layers from the outside of the TPL assembly to lower the helmet onto the aircrewmember's head without changing the fit. Remove layers from the inside of the TPL assembly to relieve pressure and to optimize fit.

TPL layers can be modified, by cutting out areas in the layer/layers over the hot spots or pressure points. No cutting should be done on the layer that comes in contact with the aircrewmember's head (the inside layer). The size and shape of the removed area of TPL should match the shape and size of the irritated area on the aircrewmember's head. Circular shapes, (i.e. penny, nickel, quarter, etc.) work best for correction of hot spots, while half round shapes (i.e. half-moon, quarter-moon and crescent-moon) usually alleviate areas of pressure.

1. After preliminary adjustments to the TPL have been accomplished, have the aircrewmember don the helmet to check fit and comfort. If further adjustment/modification is required follow procedures below.

WARNING

The TPL assembly requires a maximum of five layers and a minimum of two layers to provide proper fit and impact attenuation protection.

2. Remove TPL layers one at a time from the liner. Pressure relief around the ears can be achieved by removing layers from the outside of the liner. Number each layer as it is removed (first layer No. 1, second layer No. 2, etc.) to aid in reassembly, if required. Remove up to, but no more than, three layers from the assembly. Check for proper fit after each layer is removed.

3. If a satisfactory fit has been achieved, have the aircrewmember doff the helmet.

4. If after the above steps have been performed, a safe, stable fit cannot be obtained, then the TPL may be heated so that it conforms to the aircrewmember's head shape. Perform custom fitting in accordance with paragraph 3-55.

CAUTION

To prevent heat damage to the TPL plastic layers, do not store the helmet in a closed cockpit or automobile. Temperatures in these closed areas can exceed 200°F (93.3°C) on an 85°F (30°C) day.

3-55. Custom Fitting of TPL Assembly and Installation Instructions for the Oregon Aero Zetaliner. To custom fit the TPL assembly or to install the optional Oregon Aero Zetaliner, proceed as follows:

Materials Required

Quantity	Description	Reference Number
1	Oregon Aero Zetaliner (Note 1)	95132, 3, 4, 5 (medium); 95142, 3, 4, 5 (large); 95152, 3, 4, 5 (extra large); 95162, 3, 4, 5 (extra large wide) NIINs TBD.

Notes: 1. Oregon Aero Zetaliners are commercially available from Oregon Aero Corporation, Scappoose, OR 97056. Telephone (503) 543-7399.

NOTE

Refer to local Aeromedical Safety Officer (AMSO) for location of nearest suitable oven to conduct the heating and forming of TPL assembly. If unable to achieve a satisfactory fit after heat forming the TPL or using the optional Oregon Aero Zetaliner, contact area FAILSAFE Tiger Team for helmet fitting assistance.

Oregon Aero Zetaliners are optional (commercially available) comfort liners that are approved for use in place of the supplied thermoplastic liner. The liners are provided in 4 sizes, with 4 different foam thicknesses available in each size. The last three digits of the part number indicate the liner size and thickness, for example in P/N 95162, the digits "16" denote the size extra large wide, the last digit "2" represents a 1/4-inch thick foam layer, the thinnest foam layer provided. Other layers available are "3" (3/8-inch), "4" (1/2-inch), "5" (5/8-inch). When replacing the TPL with the Zetaliner, remove the TPL cover and count the number of plastic layers. Order the Zetaliner corresponding to the correct size for the helmet with the last digit of the part number matching the number of thermoplastic layers being replaced. To replace a 4 layer TPL in a size extra large helmet, order P/N 95154.

1. Reassemble the TPL by replacing the removed layers in the order in which they were removed. After the TPL is assembled, secure the layers by passing a heated soldering pencil through all five layers at the original attachment point.

2. Reinstall the TPL cover on the layers prior to heating.

3. Set the oven rack to the lowest position, and heat the oven to 200° ±5°F. Place a thermometer on the rack in a position where it may be observed throughout the entire heating process.

4. Thoroughly brief the aircrewmember on the fitting procedures, emphasizing those to be performed by the aircrewmember.

CAUTION

Do not attempt to heat the TPL in a microwave oven (which will not heat the layers) or a toaster oven (which will damage the liner).

Do not remove the cloth cover; the TPL is heated as a unit.

Monitor the oven temperature constantly to avoid overheating. Do not leave the TPL unattended while heating.

5. After 15 minutes, ensure the oven is stabilized at the pre-set temperature, and place the TPL with the fabric side down in the center of the oven rack. Set timer. See table 3-5.

Table 3-5. Maximum Heating Time per Number of Layers

Number of Layers	Time (Minutes)
5	8
4	7
3	6
2	5

NOTE

Heating characteristics of ovens vary. The time stated above is a guideline and may have to be adjusted to suit your oven.

6. To allow easy positioning of the heated liner into the helmet, place masking tape over the rear hook fastener tapes on the energy absorbing liner.

CAUTION

The TPL plastic layers will be hot. When removing the TPL from the oven, touch the fabric cover only.

NOTE

The following steps are to be performed by the aircrewmember assisted by the Aircrew Survival Equipmentman (PR), and should be accomplished within 30 seconds of removal of the heated liner from the oven.

7. Remove the TPL from the oven, touching only the fabric-covered portion. Squeeze the sides of the TPL to clear the earcups, and insert the heated TPL into the helmet with the wide end toward the front. The Aircrew Survival Equipmentman should hold the rear portion of the TPL tightly against the energy-absorbing liner during donning to ensure the TPL does not bunch up in the rear.

8. With the TPL symmetrically aligned in the helmet, have the aircrewmember hook thumbs over the edgeroll, spread the helmet slightly, place the brow of the helmet against the forehead, and rotate the helmet rearward and downward to don. Ensure that the edgeroll on the helmet brow is positioned just out of the line of sight as the aircrewmember looks upward.

9. Have the aircrewmember apply downward pressure on helmet with palms of hands until the ears are centered in the earcups. Maintain this pressure for five minutes.

10. Have the aircrewmember release downward pressure at the end of five minutes. Check helmet fit. If necessary, remove one layer from the inside of the TPL and repeat steps 2 through 8 until the fit is satisfactory.

11. Once a satisfactory fit is achieved, have the aircrewmember doff the helmet. Lift the rear portion of the TPL away from the energy-absorbing liner and remove masking tape from the hook fastener tapes. Secure TPL to the hook fastener tapes.

12. If unable to achieve a satisfactory fit with the TPL following procedures outlined in steps 4 through 10 above, order the appropriate size and thickness Oregon Aero Zetaliner.

13. Place the Zetaliner inside the helmet by centering the folded liner onto the energy absorbing liner, spread sides outward to mate with the installed hook fastener tabs. Ensure the widest end (with three sewn segments) is facing the front of the helmet.

3-56. NVIIS ALIGNMENT CHECK. To check for proper assembly of helmet, perform the NVIIS alignment check as follows:

NOTE

Improper installation of the energy-absorbing liner may result in shifting of the helmet on the head, causing misalignment of the goggles in front of the eyes.

1. Have the aircrewmember install the NVIIS battery pack on the helmet and connect the electrical lead.

2. Have the aircrewmember don the helmet by placing the edgeroll on the helmet brow against the forehead and rotating the helmet rearward down onto the head.

3. For proper eye offset, ensure that the edgeroll on the helmet brow is positioned just out of the aircrewmember's line of sight as the aircrewmember looks upward.

4. Have the aircrewmember install the goggles onto the quick don mount.

5. Have the aircrewmember enter a darkened room and turn battery pack ON.

6. Have the aircrewmember adjust the goggles for proper viewing. The goggles should not block or limit the aircrewmember's normal range of vision in any way.

7. If the view is affected, make notes of the affected area of vision as described by the aircrewmember.

8. If the goggles cannot be adjusted to prevent obstruction to vision, remove and re-install the energy-absorbing liner in accordance with replacement procedures in paragraph 3-94.

9. Once the goggles can be adjusted to prevent view obstruction, have the aircrewmember remove them and the battery pack. They must be stored in the NVIIS carrying case when not in use.

3-57. BORESIGHTING OF HELMET SIGHT ASSEMBLY (HGU-67/P). To align the helmet assembly and helmet sight assembly to the individual aircrewmember, perform the boresight check as follows:

Support Equipment Required

Quantity	Description	Reference Number
1	Helmet Sight Alignment Set	2278335-02

1. Have the aircrewmember don the helmet by placing the edgeroll on the helmet brow against the forehead and rotating the helmet rearward down onto the head.

2. For proper eye offset, ensure that the edgeroll on the helmet brow is positioned just out of the crewmember's line of sight as the aircrewmember looks upward.

3. Have the aircrewmember attach helmet sight assembly to helmet block assembly.

4. Have the aircrewmember manually position the eyepiece to the LOCKED DOWN position.

5. To align the reticle to the aircrewmember's eye, proceed as follows:

a. Adjust the eyepiece vertically by squeezing the flat spring and sliding the shaft up and down.

b. Adjust the eyepiece laterally by loosening the center screw located on the backside of the HSA mount, rotating the eyepiece, and tightening the screw.

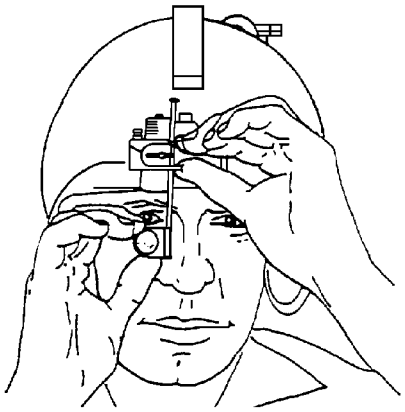

3p57s5a

Step 5a - Para 3-57

WARNING

Sudden movement of helmet and boresight tool (figure 3-11) can cause eye injury to person viewing through boresight tool.

6. Perform helmet sight assembly test and boresight adjustment in accordance with table 3-6 and figure 3-12.

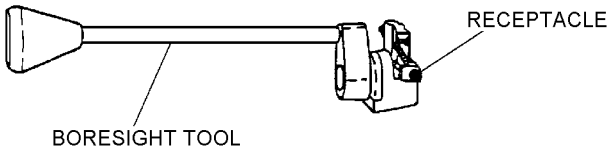

3-11

Figure 3-11. Boresight Tool

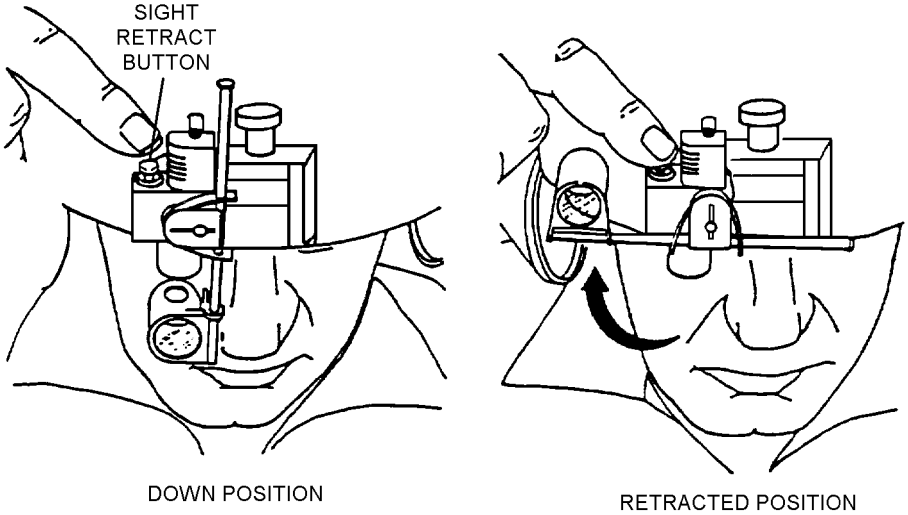

3-12

Figure 3-12. Helmet Sight Assembly (HSA) Retract Button

Table 3-6. Helmet Sight Assembly Test and Boresight Adjustment

Test Sequence	Test and/or Check	Result and Remedy
1	Connect helmet A1P1 plug to test set lead.	
2	Attach boresight tool (figure 3-11) to receptacle assembly on helmet assembly.	**WARNING** Sudden movement of helmet and boresight tool can cause injury to person viewing through boresight tool.
3	Turn test set HELMET CURRENT switch ON.	
4	Adjust DIM-BRIGHT knob to desirable reticle intensity.	
5	Aircrewmember sights through eyepiece on a distant target (1000 meters or more). Technician sights through boresight tool at same target.	Boresight should view exactly as eyepiece. If boresight tool views above, below, left, or right of target, adjust screws on receptacle as specified below.

Position of view through boresight tool relative to target	Loosen	Tighten
Above	Top, Left, and Right	Top
Below	Top	Left and Right
Left	Right	Left
Right	Left	Right

If adjustment cannot be made, check alignment of helmet boresight tool; then check position of receptacle assembly.

6	Turn test set HELMET CURRENT switch OFF.	
7	Disconnect boresight tool from helmet.	
8	Disconnect A1P1 plug from test set lead.	
9	Press SIGHT RETRACT button on helmet sight assembly (figure 3-12).	Eyepiece retracts (rotates upward).

3-58. INSTALLATION AND PRELIMINARY FITTING OF CBR ADAPTER STRAP ASSEMBLIES.

Materials Required

Quantity	Description	Reference Number
1	Helmet Modification Kit	91B8215 (Note 1)
1	Helmet Attachment Kit	CL6616 NIIN 99-141-2092 (Note 2)
As Required	Adhesive, RTV 102/732	MIL-A-46106 NIIN 00-877-9872

Notes: 1. The Helmet Modification Kit is used for the A/P23P-14A(V) Respirator Assembly.
2. The Helmet Attachment Kit is used for the A/P22P-14(V) Series Respirator Assemblies.

NOTE

Before beginning this procedure, ensure that the helmet and CBR mask have been properly sized and fitted. Refer to NAVAIR 13-1-6.10 for mask sizing and fitting instructions.

During installation of socket, orient the pull-the-dot socket so the strap can be pulled directly forward to release the adapter strap socket from the snap that will be mounted on the helmet.

1. (For A/P23P-14A(V)) Install the socket in the center of the adapter strap ensuring that the oriention of the pull-the-dot socket allows the strap to be pulled directly forward to release the adapter strap socket from the snap mounted on the helmet.

2. (For A/P22P-14(V)1 only) The respirator assembly comes with the adapter strap attached to the toggle harness and the socket installed on the adapter strap.

3. Remove visor assemblies from helmet to prevent damage to lenses.

4. Locate the position of the snap fastener stud as follows:

a. Have the aircrewmember don the respirator asembly and helmet and fasten chinstrap.

b. Adjust the toggle harness terminal to the midpoint range (to allow for further adjustment later).

c. Hold the mask in the proper position on the aircrewmember's face.

NOTE

The toggle harness cables should lie over the hooks on the facepiece front, when the V-bow is down.

d. Flip the V-bow down into the flight position as shown. Using the center of the socket on the adapter strap as a guide, place the socket against the helmet and mark the location for drilling. Repeat for the opposite side. Remove the helmet and mask.

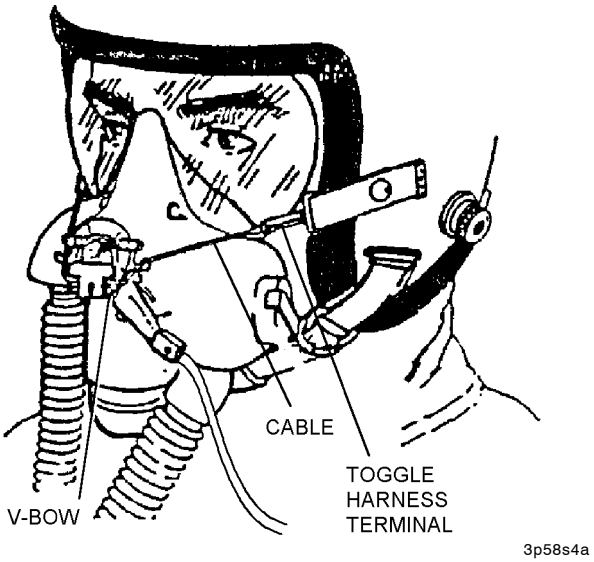

Steps 4a thru 4d - Para 3-58

5. Ensure that all internal and external helmet components have been cleared away from the points to be drilled. Drill the marked positions using a #25 or #26 drill bit.

6. Deburr edges of hole. Remove all drilling debris from inside helmet.

7. Apply RTV sealing compound to the first two threads of the screw. Assemble the snap fastener studs as shown below. Tighten the hex nuts.

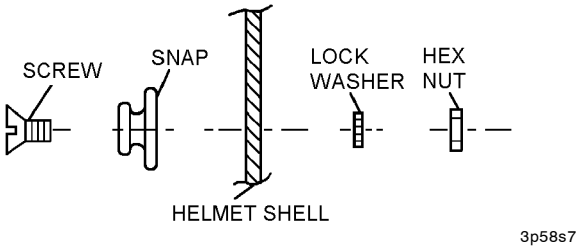

Step 7 - Para 3-58

8. Reassemble external and internal components.

9. Install visor assemblies onto helmet.

10. Have aircrewmember don mask and helmet. Snap straps to helmet. Adjust toggle harness cable and terminal as necessary and evaluate fit. Ensure that mask position and tension are in accordance with NAVAIR 13-1-6.10.

11. Document maintenance actions in accordance with OPNAVINST 4790.2 Series.

Section 3-4. Modifications

3-59. GENERAL.

3-60. There are no approved modifications to either the HGU-67/P or HGU-84/P helmet assemblies.

Section 3-5. Maintenance

3-61. GENERAL.

3-62. Proper maintenance of helmet assemblies is essential for optimum helmet performance. The aircrewmember's responsibility for maintenance is limited to preflight/postflight inspections and cleaning. Replacement of components and repair of the helmet assembly will be performed at the organizational level. All inspections and maintenance actions shall be documented in accordance with OPNAVINST 4790.2 Series. Repair and replacement instructions for maintaining serviceability are listed in tables 3-7 and 3-8.

NOTE

The inspection interval for helicopter helmet assemblies assigned selected air reserve aircrewmembers has been extended to 180 days vice 90 days, provided helmets are stowed under controlled conditions.

3-63. INSPECTION.

3-64. PREFLIGHT/POSTFLIGHT INSPECTIONS. The preflight/postflight inspection is a visual helmet inspection performed before/after each flight by the aircrewmember to whom the helmet assembly is issued. To perform the helmet assembly inspection, visually inspect for the general overall condition of the helmet assembly. Refer to paragraph 3-66, Visual Inspection.

NOTE

Defects or questionable areas noted during this inspection shall be referred to the proper maintenance activity for required corrective action.

3-65. SPECIAL INSPECTION. The special inspection shall be performed every 90 days at the organizational level. The inspection shall consist of a visual inspection (paragraph 3-66), a functional check (paragraph 3-67), and cleaning in accordance with paragraph 3-73.

3-66. VISUAL INSPECTION. Perform the visual inspection as follows:

1. Inspect chin/nape assembly for loose or broken stitching, snap fastener retention, and fraying. Repair broken stitching, reset loose snap fasteners or replace chin/nape assembly.

2. Visually inspect all snap fasteners for proper clinching of the fastener components. The rolled barrels in each socket must be rolled over all around. They should have a symmetrical, doughnut-shaped appearance. Any fastener on which the barrel material is not completely rolled over the edge of the stud or socket must be discarded.

3. Inspect helmet shell assembly for splits, cracks, chips, and delaminations. Replace helmet shell assembly if damage is deemed extensive.

4. Inspect MK-634/AIC cable clip (if installed) for security of attachment to communications cable grommet.

CAUTION

A laser visor is considered damaged and shall not be used if a scratch is detected that exceeds one third of the thickness of the lens. A lens can continue to be used if a scratch of lesser depth is detected and is not in the critical visor areas or reported as bothersome by the aircrewmember.

NOTE

Refer to paragraph 3-66A for instructions for disposal of laser visor.

5. Inspect visor assemblies for cracks, splits, chips, and delaminations; and inspect lenses for scratches and cracks. Replace visors deemed to have extensive damage.

6. Inspect edgeroll and visor pad for rips, tears, splits, or loosening from helmet shell assembly. Small (under 2-inch total length) tears, rips, or splits may be repaired in accordance with paragraph 3-103A.

7. Inspect NVIIS wiring harness cable, HSA wiring harness cable, communication cable and cordsets for cut, split, or abraded insulation. Small areas of abrasion may be covered with suitable electrical tape, cut or split insulation may require cable replacement.

8. Inspect boom microphone assembly and swivel assembly for security and adjustability.

9. Inspect earcup assemblies for proper retention to pile fastener inside helmet assembly.

10. Inspect earseals for sound attenuation, cuts, splits, and pliability. Replace earseal if required.

11. Inspect all hardware for damage, corrosion, and security of attachment. Treat corrosion in accordance with NAVAIR 01-1A-509, replace damaged hardware, and tighten any loose hardware.

Table 3-7. Repairs/Fabrications/Replacements

Description of Repair/Fabrication/Replacement	Paragraph
Replacement of Visor Assemblies	3-76
Replacement of Thermoplastic Liner (TPL) Assembly or Oregon Aero Zetaliner	3-77
Replacement of Earcup Assembly Components	3-79
Replacement of Communications Cable Assembly (Radio Frequency to Aircraft Audio)	3-80
Replacement of Boom Microphone Assembly	3-84
Replacement of Boom Swivel Assembly	3-85
Replacement of Amp Mounting Bracket	3-86
Replacement of M23595/1-2 (AM-3597C/A) Amplifier	3-87
Repair of Integrated Chin/Nape Assembly: Nape Pad, Chin Strap, Chin Pad, and Clamp	3-88
Replacement of Integrated Chin/Nape Assembly	3-93
Replacement of Energy-Absorbing Liner	3-94
Replacement of CBR Snap Fastener Stud	3-96
Replacement of Visor Snap Fastener Stud	3-97
Replacement of Helmet Block Assembly	3-98
Replacement of NVIIS Wiring Harness Assembly	3-99
Replacement of Gunsight Wiring Harness Assembly	3-100
Replacement of Receptacle Bracket Assembly	3-101
Replacement of Helmet Shell Assembly	3-102
Repair of Helmet Shell Assembly	3-103
Repair of Edgeroll	3-103A
Replacement of Strobe Light Securing Patch	3-104
Replacement of Battery Securing Patch	3-105
Fabrication of Medium/Large Battery Securing Patch	3-107
Fabrication of Extra-Large and Extra-Large Wide Battery Securing Patch	3-108
Replacement of Reflective Tape	3-109
Fabrication of Removable Camouflage Cover	3-110

Table 3-8. Repairs/Fabrications/Replacements (HGU-84/P Only)

Description of Repair/Fabrication/Replacement	Paragraph
Replacement of M22442/37-4708 (CX-4708A/AIC) Cable Assembly, MK-634/AIC Cable Clip, and MIL-C-22442/30-1 (CX-13155/A) or M22442/30-2 (CX-13164/A) Cordsets	3-81
Replacement of M22442/15-1 (CX-4832A/AR) Cable Assembly or M22442/19-1 (CX-12972/AR) Cable Assembly	3-83
Replacement of Bayonet Receivers	3-95

12. Inspect CBR adapter strap assemblies for proper function and retention to helmet assembly.

13. Inspect installed TPL or Zetaliner cover fabric for tears, cuts, broken or skipped stitches. Repair/replace as required.

NOTE

Defects determined from this inspection shall be referred to the proper maintenance activity for required corrective action.

3-66A. DISPOSAL OF LASER VISOR. The Laser Eye Protective Visor is a controlled item and shall be destroyed at the organizational maintenance level by any means available (incinerated, crushed, shattered) prior to final disposal.

3-67. FUNCTIONAL CHECK. To check the function of various parts of the HGU-67/P and HGU-84/P helmet assemblies, proceed as follows:

3-68. Communications System. Functionally check the helmet assembly communications in accordance with the procedures in NAVAIR 17-15BC-22, using TTU-489/E Oxygen Tester (P/N 1827AS100-1/NIIN-01-317-7799.)

3-69. NVIIS Wiring Harness Assembly. Perform continuity check on the NVIIS wiring harness assembly as follows:

1. Locate four electrical pins in end of NVIIS connector on back of helmet. Note red dot and keyway.

2. Locate six pins of NVIIS terminal block in helmet block assembly on brow of helmet.

3. Check for continuity between matching numbered circuits. Note that circuits 2 and 4 have two pins on the helmet block.

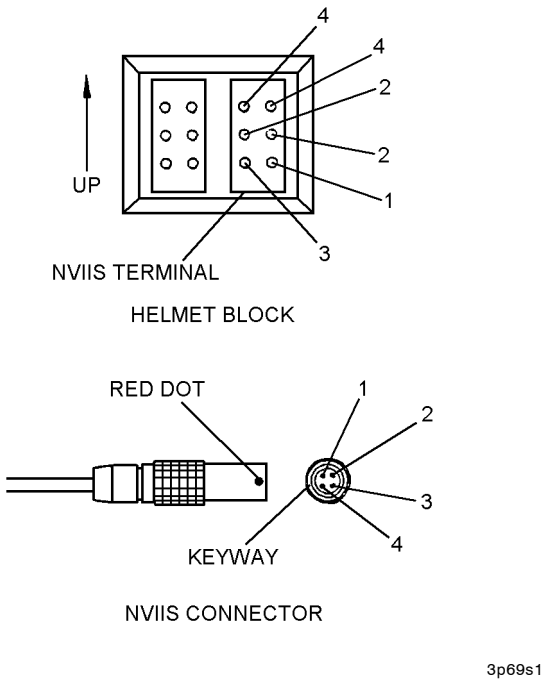

Steps 1 thru 3 - Para 3-69

3-70. Gunsight Wiring Harness Assembly. Perform continuity check on the gunsight wiring harness assembly as follows:

1. Align two white dimples on magnet of receptacle assembly.

2. Locate eight electrical pins in end of A1P1 connector on back of helmet. Note orientation of connector.

3. Locate six pins of gunsight terminal block in helmet block assembly on brow of helmet.

4. Check for continuity between matching numbered circuits 1, 2, 3, 4, 7, and 8 which connect to the helmet block pins.

5. Check for continuity between pins 5 and 6 which connect to a reed switch in the gunsight receptacle assembly. There should be continuity with a metal bar attached to the magnet. There should be no continuity when nothing is attached.

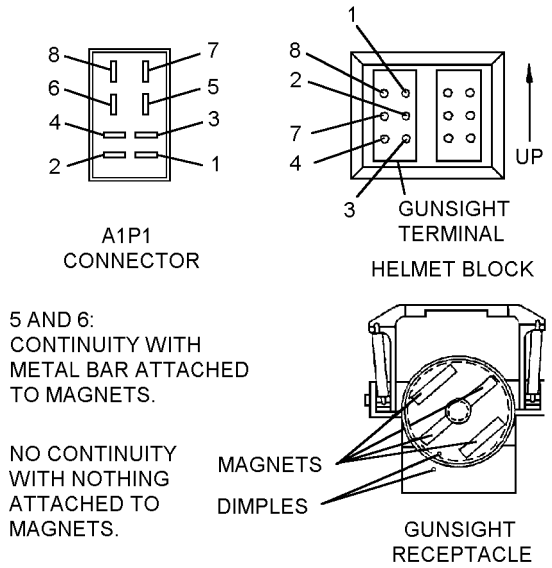

3p70s1

Steps 1 thru 5 - Para 3-70

3-71. Boresighting. Perform boresighting of the helmet sight assembly in accordance with paragraph 3-57.

3-72. Quick Don Mount Assembly. Turn the adjustment knob to check for smooth vertical movement of the goggles attachment bracket.

3-73. CLEANING.

3-74. To clean the various parts of the helmet, proceed as follows:

Materials Required

Quantity	Description	Reference Number
As Required	Detergent, Mild Liquid	Commercial
As Required	Saddle Soap, or Equivalent	—
As Required	Cloth, Lint-Free	MIL-C-85043 NIIN 00-165-7195
As Required	Sponge	—

Materials Required (Cont)

Quantity	Description	Reference Number
As Required	Alcohol, Isopropyl	TT-I-735
As Required	Tape, Pressure Sensitive Adhesive	A-A-1243 NIIN 00-782-6220

1. Clean the helmet shell as follows:

a. Wipe the shell with a cloth dampened with a mild detergent.

b. Wipe the shell with a cloth dampened with water, then allow to air dry.

2. Clean the leather edgeroll and chin/nape assembly as follows:

a. Apply a small amount of saddle soap or equivalent with a damp sponge, to leather surfaces and a mild solution of detergent and water to synthetic surfaces.

b. Rub vigorously to create a thin soap film.

c. Wipe with a damp cloth, and let dry overnight.

3. Clean the thermoplastic liner cover assembly as follows:

a. Remove the cover from the layer assembly. Remove the double-sided tape.

b. Hand-wash the cover with mild detergent and water.

c. Rinse the cover in clear water, and allow to air dry.

d. Install new double-sided tape.

e. Reinstall the cover.

CAUTION

Handle visors by edges only.

Avoid scratching of visors by rings, watches, buckles, and other metal or glass objects.

Do not spray or splash cleaner directly onto visor or submerge visor in any liquid.

4. Clean visor lenses with a soft, lint-free cloth dampened with isopropyl alcohol.

CAUTION

Do not use any liquids to clean the helmet block assembly and the electrical contacts.

5. Clean helmet block assembly and gold-plated electrical contacts with a dry, soft, lint-free cloth.

CAUTION

Do not use any liquids to clean the helmet sight assembly, eyepiece, and electrical contacts.

6. Clean helmet sight assembly, the eyepiece, and the gold plated electrical contacts with a dry, soft, lint-free cloth.

CAUTION

Do not use any liquids to clean the quick don mount and the electrical contacts.

7. Clean quick don mount and gold-plated electrical contacts with a dry, soft, lint-free cloth.

CAUTION

Do not use any liquids to clean the receptacle assembly or the magnetic contact.

8. Clean receptacle assembly and magnetic contact with a dry, soft, lint-free cloth.

CAUTION

Do not use any liquids to clean the boom microphone assembly.

9. Clean boom microphone assembly with a dry, soft, lint-free cloth.

10. Document in accordance with OPNAVINST 4790.2 Series.

3-75. REPLACEMENT/REPAIR OF HELMET COMPONENTS.

3-76. REPLACEMENT OF VISOR ASSEMBLIES. Removal and re-installation procedures necessary to replace the clear inner visor and any one of the four outer visor assemblies are as follows:

Materials Required

Quantity	Description	Reference Number
1	Visor Assemblies	(Note 1)

Notes: 1. Table 3-1A lists all visors available for the HGU-84/P series helmets.

CAUTION

Avoid scratching the visor with objects such as rings, watches, buckles, tools, or bench surfaces.

Do not damage the visor by bending or flexing it.

NOTE

The neutral, neodymium, amber, gradient and reduced profile safety visor assemblies feature pull-the-dot fasteners which have been installed to un-snap in a direction opposite that of the inner visor assembly. This is done to prevent inadvertent release of both visors during operation and to facilitate rapid doffing in an emergency situation.

1. Remove the outer visor by grasping the strap tabs and pulling the straps away from the helmet.

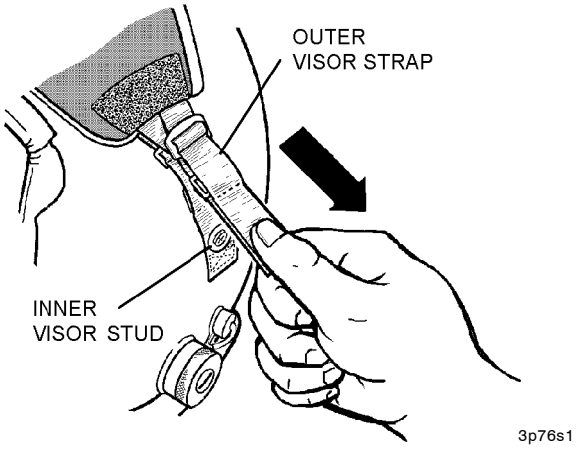

Step 1 - Para 3-76

NOTE

If not replacing the inner visor, obtain new outer visor and go to step 5.

2. Remove the inner visor by placing a hand beneath the straps and pushing the straps away from the helmet. Both inner and outer visors may be removed as a unit in this manner.

3. Position the replacement inner visor assembly on the helmet over the visor pad. Stretch the end of the visor strap slightly past the helmet snap fastener stud, and fasten visor snap to helmet stud from bottom to top. Repeat for the opposite strap.

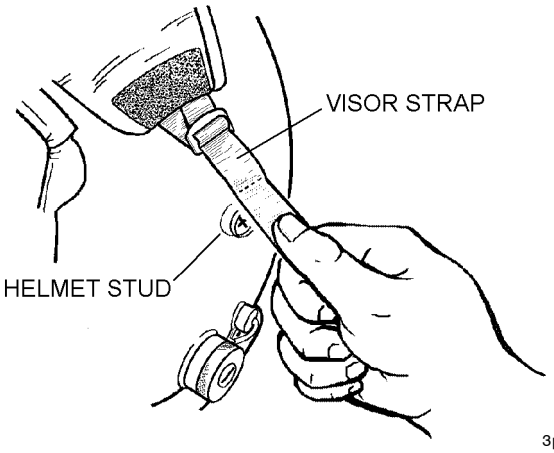

Step 3 - Para 3-76

NOTE

If desired by aircrewmember, after proper tension is achieved, adjustment strap friction adapters may be tacked using Size E nylon thread, single, two turns tied off with a surgeon's knot followed by a square knot.

4. Adjust the inner visor strap tension as desired. Tack visor strap friction adapters to prevent slippage or loosening of the visor assembly during operations.

5. Lower inner visor to the in-use position and place replacement outer visor onto helmet lens pad. Fasten the outer visor snap fastener socket to the inner visor snap fastener stud from top to bottom. Repeat for the opposite side.

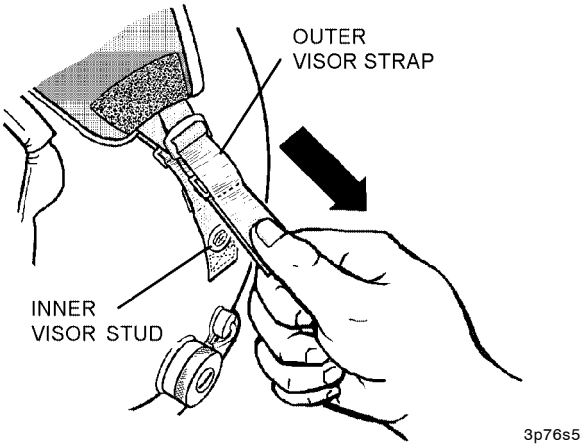

Step 5 - Para 3-76

6. Adjust the outer visor strap tension as desired. Tack visor strap friction adapters to prevent slippage or loosening of the visor assembly during operations.

7. Install the black leather lens cover by attaching hook fastener strips on the inside of the cover to the pile fastener strips on the outer visor.

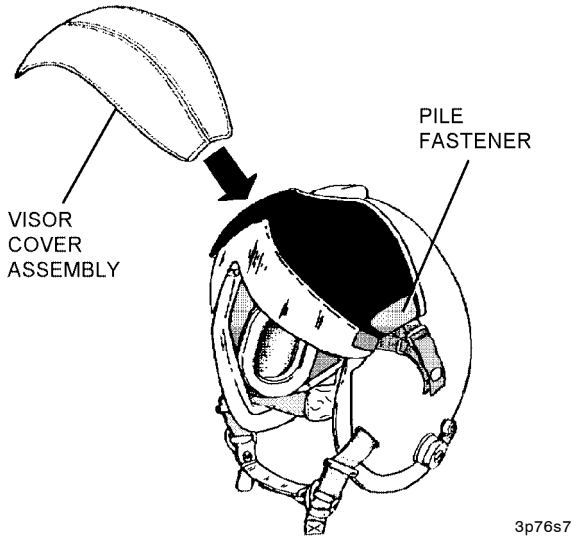

Step 7 - Para 3-76

8. Place unused visor in visor bag and stow in helmet bag, if desired.

9. Document in accordance with OPNAVINST 4790.2 Series.

3-77. REPLACEMENT OF THERMOPLASTIC LINER (TPL) ASSEMBLY OR OREGON AERO ZETALINER.

To replace the TPL or Zetaliner, proceed as follows:

Materials Required

Quantity	Description	Reference Number
1	TPL Assembly, Medium	85D7087-1
1	TPL Assembly, Large	85D7087-2
1	TPL Assembly, Extra-Large	85D7087-3
1	TPL Assembly, Extra-Large Wide	85D7087-30P
1	TPL Cover Assembly, Medium	85D7088-1
1	TPL Cover Assembly, Large	85D7088-2
1	TPL Cover Assembly, Extra-Large	85D7088-3
1	Oregon Aero Zetaliner (Note 1)	95132, 3, 4, 5 (medium); 95142, 3, 4, 5 (large); 95152, 3, 4, 5 (extra large); 95162, 3, 4, 5 (extra large wide) NIINs TBD
1	Scissors	COML
As Required	Tape, Pressure Sensitive Adhesive	A-A-1243 NIIN 00-782-6220

Notes: 1. Oregon Aero Zetaliners are commercially available from Oregon Aero Corporation, Scappoose, OR 97056. Telephone (503) 543-7399.

CAUTION

Avoid scratching the visor with objects such as rings, watches, buckles, tools, or bench surfaces.

Do not damage the visor by bending or flexing it during TPL removal and installation.

NOTE

Oregon Aero Zetaliners are optional (commercially available) comfort liners that are approved for use in place of the supplied thermoplastic liner. The liners are provided in 4 sizes, with 4 different foam thicknesses available in each size. The last three digits of the part number indicate the liner size and thickness. For example in P/N 95162, the digits "16" denote the size extra large wide, the last digit "2" represents a 1/4-inch thick foam layer, the thinnest foam layer provided. Other layers available are "3" (3/8-inch), "4" (1/2-inch), and "5" (5/8-inch). When replacing a properly fitted TPL with the Zetaliner, remove the TPL cover and count the number of plastic layers. Order the Zetaliner corresponding to the correct size for the helmet with the last digit of the part number matching the number of thermoplastic layers being replaced. To replace a 4 layer TPL in a size extra large helmet, order P/N 95154.

1. To remove the TPL assembly or the Zetaliner, proceed as follows:

a. Squeeze the sides of the TPL assembly or the Zetaliner together to clear the earcups and remove by detaching from the hook fastener tabs on the underlying energy absorbing liner.

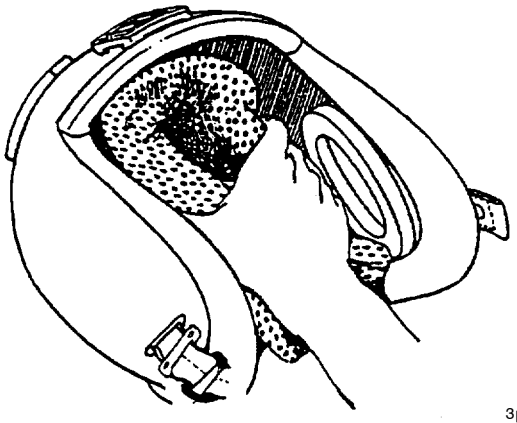

3p77s1a

Step 1a - Para 3-77

b. If replacing entire TPL assembly or Zetaliner, proceed to step 3.

2. If replacing TPL cover assembly or removing it for cleaning, proceed as follows:

a. Fold the sides of the TPL cover down, and remove the cover from the layer assembly.

b. Remove and discard the double-sided tape attached to the layer assembly or cover.

c. Cut four pieces of double-sided tape approximately 1 inch x 2 inches.

d. Attach the new pieces of double-sided tape to the layer assembly or cover where the old tape was removed.

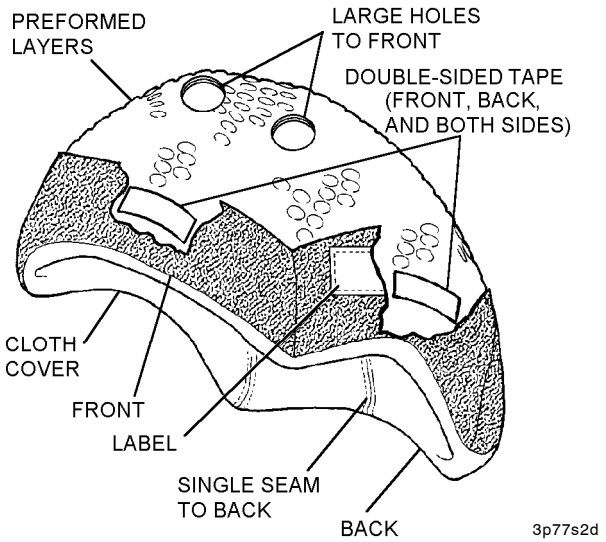

Step 2d - Para 3-77

NOTE

The front panel of the TPL cover is longer than the rear edge. Large holes in the top of the layer assembly face the front. The single seam on the cover is positioned toward the rear.

e. Locate the front of the TPL cover and layer assembly. Turn the TPL cover inside out.

f. Align the front edge of the TPL cover with the front edge of the layer assembly.

g. Fold the front of the TPL cover over the front of the layer assembly, ensuring that the corners of the layer assembly are pushed completely into the corners of the cover.

h. Align the rear edge of the TPL cover with the rear of the layer assembly.

i. Fold the rear of the TPL cover over the layer assembly, ensuring that the corners of the layer assembly are pushed completely into the corners of the cover.

j. Fold the sides of the TPL cover over the sides of the TPL layer assembly and attach them to the double-sided tape, following the contour of the layers.

k. Push the TPL cover up inside the layer assembly, ensuring that cover lies smoothly.

3. To install the TPL assembly or Zetaliner, proceed as follows:

a. Squeeze inward on the sides of the TPL or Zetaliner to clear the earcups. Align the front edge of the liner with the brow edge of the energy absorbing liner. Relax inward pressure and attach liner to the hook fastener tabs on the front of the energy absorbing liner.

b. Attach the rear of the TPL or Zetaliner to the hook fastener tabs on the rear portion of the energy absorbing liner. Ensure the TPL or Zetaliner are positioned against the energy absorbing liner at the front, rear and crown areas.

4. Check the helmet fit in accordance with paragraph 3-53.

5. Document in accordance with OPNAVINST 4790.2 Series.

3-78. REPLACEMENT OF COMMUNICATIONS COMPONENTS. The following procedures list the steps necessary to repair or replace individual components of the helmet assemblies. Disassembly should be conducted only as far as required to repair/replace the specific item(s) involved.

3-79. Replacement of Earcup Assembly Components. Repair of either the RH or LH earcup assembly is limited to replacement of the earseal, earphone holder, right earcup, or left earcup. To replace the entire earcup assembly, it must be completely disassembled to remove the earphone element located inside. These same procedures are also used to replace the earphone element.

NOTE

Select only the necessary repair parts from the materials required list.

Materials Required

Quantity	Description	Reference Number
1	Earcup Assembly	90C7885
1	Earcup, Left Hand	90C7886-1
1	Earcup, Right Hand	90C7886-2

Materials Required (Cont)

Quantity	Description	Reference Number
1	Earphone Holder	765AS233-1
1	Earseal	88C7589
1	Oregon Aero Softseal Earseal, 3/4-inch (Note 1)	20050
1	Oregon Aero Softseal Earseal, 1 1/8-inch (Note 1)	20025
1	Earphone Element	H-87B/U

Notes: 1. Oregon Aero Softseal ear cushions are authorized optional replacements for P/N 88C7589 earseals and if desired must be commercially procured from Oregon Aero Corporation, Scappoose, OR 97056. Telephone (503) 543-7399.

CAUTION

Due to inadequate lateral impact protection afforded by this configuration, Oregon Aero Hush Kit combo part number 28034 and part number 28118 are not authorized for use in the HGU-84/P Series or the HGU-67/P Protective Helmets.

NOTE

This procedure is written for complete disassembly and reassembly of the earcup assembly. Always begin with step 1, and do not skip steps unless directed by the text.

1. Disassembly of Earcup Assembly.

a. Remove the outer and inner visors in accordance with paragraph 3-76, to prevent damage during maintenance.

b. Invert the helmet assembly on a padded surface to prevent damage to the receptacle assembly.

c. Remove earseal as follows:

(1) Pull the earcup assembly away from the pile fastener inside helmet assembly.

(2) Remove the earseal by carefully stretching it away from the lip of the earcup shell.

(3) If replacing only the earseal, obtain new earseal and go to Step 2e.

d. Remove earphone holder as follows:

(1) Remove the earphone holder with earphone from the earcup shell.

(2) Remove the earphone holder from the earphone.

(3) If replacing only the earphone holder, obtain new holder and go to Step 2c.

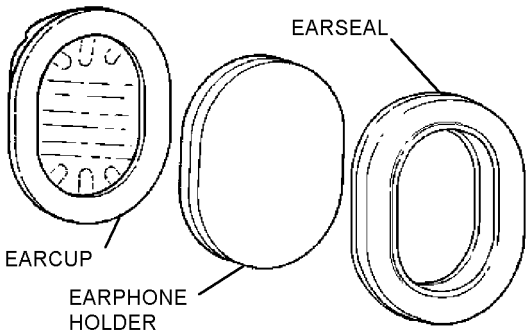

3p79s1c

Steps 1c and 1d - Para 3-79

e. Remove earphone as follows:

(1) Loosen two setscrews attaching the earphone leads to the earphone and remove leads.

(2) If replacing only the earphone, obtain new earphone and go to Step 2b.

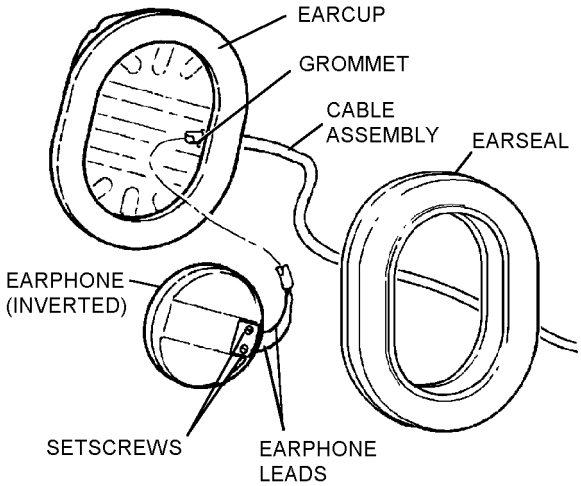

3p79s1e

Step 1e - Para 3-79

f. Remove earcup as follows:

(1) Remove the earphone leads and grommet from the earcup, being careful not to damage the grommet.

(2) If replacing the earcup, obtain new earcup and continue with Step 2a.

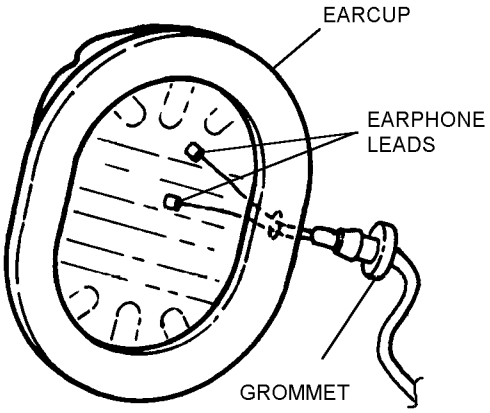

3p79s1f

Step 1f - Para 3-79

2. Assembly of Earcup Assembly.

a. Insert earphone leads through grommet into hole of earcup. Secure grommet.

THIS PAGE INTENTIONALLY LEFT BLANK.

b. Insert earphone leads into earphone and tighten setscrews.

c. Insert the earphone into the earphone holder.

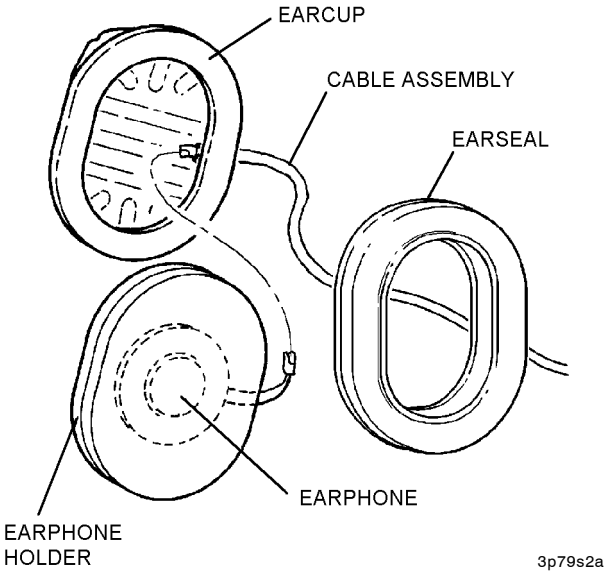

Steps 2a thru 2c - Para 3-79

d. With the slot positioned toward the grommet, insert the earphone holder into the earcup. Smooth earphone holder inside earcup to eliminate bunching.

e. Install the earseal by hooking it over one end of the earcup and carefully stretching it over the lip of the earcup shell.

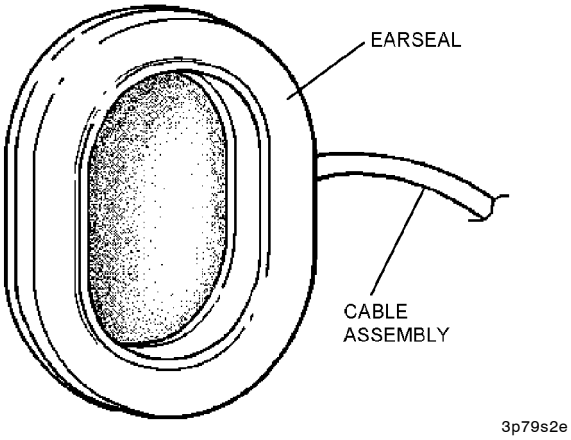

Step 2e - Para 3-79

f. Install the earcup onto pile section of helmet assembly.

g. Check the helmet fit in accordance with paragraph 3-53.

h. Install the outer and inner visors in accordance with paragraph 3-76.

i. Document in accordance with OPNAVINST 4790.2 Series.

3-80. Replacement of Communications Cable Assembly (Radio Frequency Cable to Aircraft Audio). Replace the radio frequency cable (communications cable) assembly as follows:

Materials Required

Quantity	Description	Reference Number
1	Cable Assembly, Radio Frequency	M22442/57-1 NIIN 01-297-6818
As Required	Adhesive, RTV 102/732	MIL-A-46106 NIIN 00-877-9872

1. Remove the outer and inner visors in accordance with paragraph 3-76, to prevent damage during maintenance.

2. Place helmet on RH side on padded work surface.

3. Disconnect boom microphone cable from cable connector.

4. Disassemble LH and RH earcup assemblies in accordance with paragraph 3-79, step 1.

5. Remove nape strap screw and washer from LH side of helmet. Remove lockwasher and end of nape strap from T-nut. Remove strain relief plate from T-nut.

6. Untie staycord from strain relief plate.

7. Dislodge grommet from LH side of helmet and remove communications cable assembly from helmet.

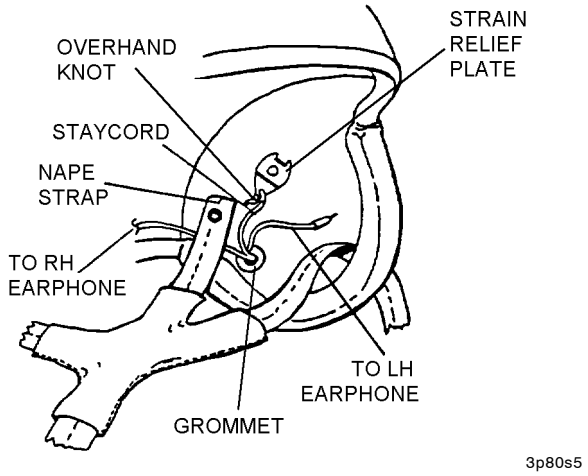

Steps 5 thru 7 - Para 3-80

8. Pass earphone leads and staycord of replacement communications cable through hole in LH side of helmet.

9. Press grommet on cable into hole and secure.

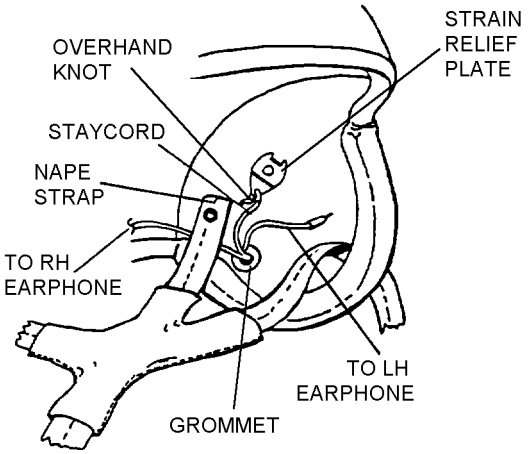

Steps 8 and 9 - Para 3-80

10. Pull excess communications cable through grommet into the helmet.

11. Tie staycord to strain relief plate using an overhand knot.

NOTE

The strain relief plate has a bent tab which fits around one side of the T-nut and prevents the strain relief plate from rotating.

12. Apply RTV adhesive to nape strap screw. Place communications cable strain relief plate under T-nut, then install lockwasher and nape strap. Reattach to helmet shell with washer and screw.

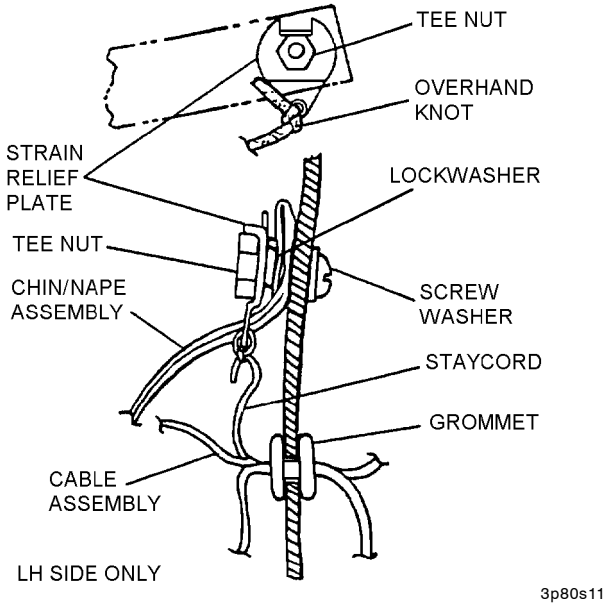

Steps 11 and 12 - Para 3-80

13. Assemble LH and RH earcup assemblies in accordance with paragraph 3-79, step 2.

14. Functionally check the helmet assembly communications in accordance with the procedures in NAVAIR 17-15BC-22, using TTU-489 Oxygen Tester (P/N 1827AS100-1/NIIN 01-317-7799.)

15. Check the helmet fit in accordance with paragraph 3-53.

16. Install the outer and inner visors in accordance with paragraph 3-76.

17. Document in accordance with OPNAVINST 4790.2 Series.

3-81. Replacement of the M22442/37-4708 (CX-4708A/AIC) Cable Assembly, MK-634/AIC Cable Clip, and MIL-C-22442/30-1 (CX-13155/A) or M22442/30-2 (CX-13164/A) Cordsets. To replace the M22442/37-4708 (CX-4708A/AIC) cable assembly, MK-634/AIC cable clip (if installed), and MIL-C-22442/30-1 (CX-13155/A) or M22442/30-2 (CX-13164/A) cordsets, proceed as follows:

Materials Required

Quantity	Description	Reference Number
1	Cable Assembly, CX-4708A/AIC (Use until exhausted)	M22442/37-4708 NIIN 00-816-3657
	-or-	
1	Cable Assembly, CX-4708A/AIC (MOD) (Alt. for CX-4708A/AIC)	89B7742 (CAGE 97427)
1	Cable Clip, (optional)	MK-634/AIC NIIN 00-864-8047
1	Cordset, CX-13155/A	MIL-C-22442/30-1 NIIN 01-128-9733
	-or-	
1	Cordset, CX-13164/A	M22442/30-2 NIIN 01-140-3501

NOTE

Use of the MK-634/AIC cable clip is optional.

1. If only the MK-634/AIC cable clip is defective, proceed as follows:

a. Remove U-173/U connector from cable clip.

b. Remove cable clip by rotating it clockwise and pulling away from large grommet.

c. Replace MK-634/AIC cable clip by pressing it against large grommet and rotating counterclockwise.

d. Reinstall U-173 connector into cable clip.

e. Go to step 4.

2. If only the MIL-C-22442/30-1 (CX-13155/A) or M22442/30-2 (CX-13164/A) cordset is defective, proceed as follows:

a. Disconnect either the MIL-C-22442/30-1 (CX-13155/A) or the M22442/30-2 (CX-13164/A) cordset from the U-173/U cordset connector on the M22442/37-4708 (CX-4708A/AIC) cable assembly.

b. Discard defective MIL-C-22442/30-1 (CX-13155/A) cordset or M22442/30-2 (CX-13164/A) cordset.

c. (HGU-84/4P and HGU-84/5P). Connect MIL-C-22442/30-1 (CX-13155/A) cordset to M22442/37-4708 (CX-4708A/AIC) cable connection (U-173/U).

d. (HGU-84/1P, HGU-84/2P, and HGU-84/3P). Connect M22442/30-2 (CX-13164/A) cordset to M22442/37-4708 (CX-4708A/AIC) cable connection (U-173/U).

e. Go to step 4.

3. If only the M22442/37-4708 (CX-4708A/AIC) cable assembly is defective, remove M22442/37-4708 (CX-4708A/AIC) cable assembly, MK-634/AIC cable clip (if installed), and MIL-C-22442/30-1 (CX-13155/A) or M22442/30-2 (CX-13164/A) cordset as follows:

a. Disconnect either the MIL-C-22442/30-1 (CX-13155/A) cordset or M22442/30-2 (CX-13164/A) cordset from the U-179/U cordset connector on the M22442/37-4708 (CX-4708A/AIC) cable assembly.

b. Disassemble earcup assemblies in accordance with paragraph 3-79, step 1.

c. Remove U-173/U cordset connector from MK-634/AIC cable clip (if installed).

d. Remove large grommet encircling cable from helmet shell assembly.

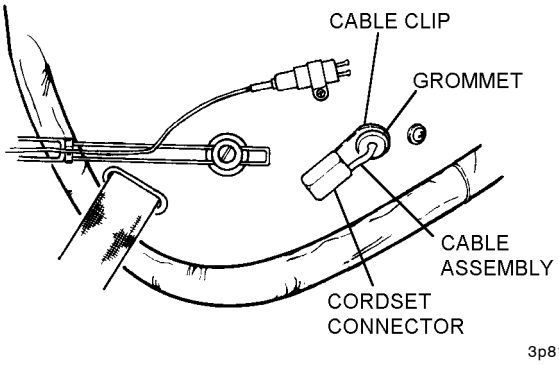

Steps 3c and 3d - Para 3-81

e. Discard defective M22442/37-4708 (CX-4708A/AIC) cable assembly.

4. Replace M22442/37-4708 (CX-4708A/AIC) cable assembly, MK-634/AIC cable clip, and MIL-C-22442/30-1 (CX-13155/A) or M22442/30-2 (CX-13164/A) cordset as follows:

NOTE

The use of MK-634/AIC cable clip is optional.

a. Pass two M22442/37-4708 (CX-4708A/AIC) cable leads with earphone contacts through large hole in bottom rear of helmet shell assembly. Press large grommet encircling cable assembly into large hole and secure.

b. Assemble and install earcup assemblies in accordance with paragraph 3-79, step 2.

c. Secure M22442/37-4708 (CX-4708A/AIC) cable assembly connector (U-173/U) to helmet shell assembly, using MK-634/AIC cable clip (if desired).

d. (HGU-84/4P, and HGU-84/5P). Connect MIL-C-22442/30-1 (CX-13155/A) cordset to M22442/37-4708 (CX-4703/AIC) cable connection (U-173/U).

e. (HGU-84/1P, HGU-84/2P, and HGU-84/3P). Connect M22442/30-2 (CX-13164/A) cordset to M22442/37-4708 (CX-4708A/AIC) cable connection (U-173/U).

f. Document in accordance with OPNAVINST 4790.2 Series.

3-82. Deleted.

3-83. Replacement of M22442/15-1 (CX-4832A/AR) Cable Assembly or M22442/19-1 (CX-12972/AR) Cable Assembly. To replace the M22442/15-1 (CX-4832A/AR) cable assembly or M22442/19-1 (CX-12972/AR) cable assembly, proceed as follows:

Materials Required

Quantity	Description	Reference Number
1	Cable Assembly, CX-4832A/AR	M22442/15-1 NIIN 00-961-8516
	-or-	
1	Cable Assembly, CX-12972/AR	M22442/19-1 NIIN 01-016-4130
1	Cable Assembly, CX-4831/AR (Note 1)	M22442/14-1 NIIN 00-631-8566
2	Screws, 6-32 x 1/4 Inch	NIIN 00-638-5517

Materials Required (Cont)

Quantity	Description	Reference Number
2	Flat Washer, 0.032-Inch Thick 0.382-Inch O.D. 0.166-Inch I.D.	NAS1197-8 NIIN 00-722-6091

Notes: 1. Use Cable Assembly M22442/14-1 attached to the teardrop fitting of Cable Assembly M22442/15-1 to connect to aircraft audio system.

1. Remove earcup assemblies in accordance with paragraph 3-79, step 1.

2. Remove screws and flat washers, securing the cable assembly junction block to helmet shell assembly.

3. Remove and discard defective cable assembly.

4. Press four cable assembly earphone leads with the earphone contacts of replacement cable assembly through 9/16-inch hole on left side of helmet shell assembly.

CAUTION

Do not over torque 6-32 x 1/4-inch screws. Over torquing will cause damage to cable assembly junction block.

5. Secure cable assembly junction block to outside of helmet shell assembly using two 6-32 x 1/4-inch screws and two 0.032-inch thick flat washers. Apply no more than 4 in-lbs. of torque to 6-32 x 1/4-inch screws.

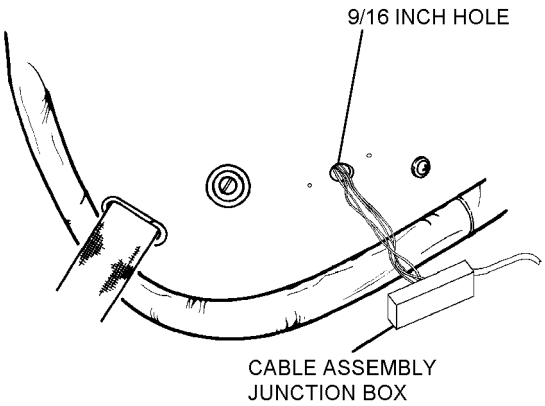

3p83s5

Step 5 - Para 3-83

6. Install earcup assemblies in accordance with paragraph 3-79, step 2.

7. Document in accordance with OPNAVINST 4790.2 Series.

3-84. Replacement of Boom Microphone Assembly. To replace the boom microphone assembly, proceed as follows:

Materials Required

Quantity	Description	Reference Number
1	Boom Microphone Assembly (Note 1)	M-33A/AIC NIIN 00-755-4643
1	Boom Microphone Assembly (Note 2)	M26542/2-01 NIIN 01-188-8529
1	Boom Microphone Assembly (Note 3)	M26542/2-02 NIIN 01-188-8530
1	Boom Microphone Assembly (Note 4)	M26542/2-03 NIIN 01-188-8528

Materials Required (Cont)

Notes:
1. The M-33A/AIC Boom Microphone Assembly is an M-87/AIC Microphone supplied with a 6-inch CX-4434/U extension cable.
2. The M26542/2-01 Boom Microphone Assembly is an M-87/AIC microphone supplied with a 13-inch CX-4434/U extension cable.
3. The M26542/2-02 Boom Microphone Assembly is an M-87/AIC microphone supplied with a 16-inch CX-4434/U extension cable.
4. The M26542/2-03 Boom Microphone Assembly is an M-87/AIC microphone supplied with a 23-inch CX-4434/U extension cable.

1. Remove the outer and inner visors in accordance with paragraph 3-76, to prevent damage during maintenance.

2. Place helmet on RH side on padded work surface, with boom swivel assembly pointing up.

3. Disconnect the boom microphone CX-4434/U cable assembly.

4. Remove the outer pan head screw from the knurled nut of the swivel assembly.

5. Remove the knurled nut from the swivel assembly by twisting it counterclockwise.

6. Remove the serrated washer, the two boom adapters, and the boom microphone assembly.

7. Remove the boom microphone assembly from between the boom adapters.

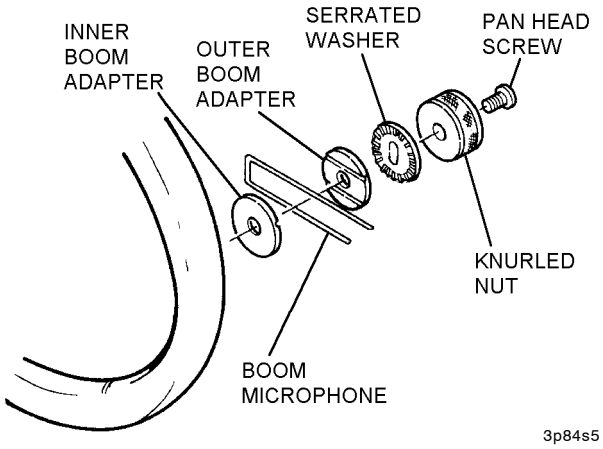

Steps 5 thru 7 - Para 3-84

8. If necessary, remove the CX-4434/U cable assembly from the boom microphone assembly by loosening two setscrews on the microphone.

9. Place the replacement boom microphone assembly between the inner and outer boom adapters, ensuring that the boom is aligned in the adapter grooves. Hold parts together.

10. Install the boom microphone and adapters; install the serrated washer with serration inboard. Install the knurled nut with the countersink outboard. Tighten knurled nut by turning clockwise. Secure with pan head screw.

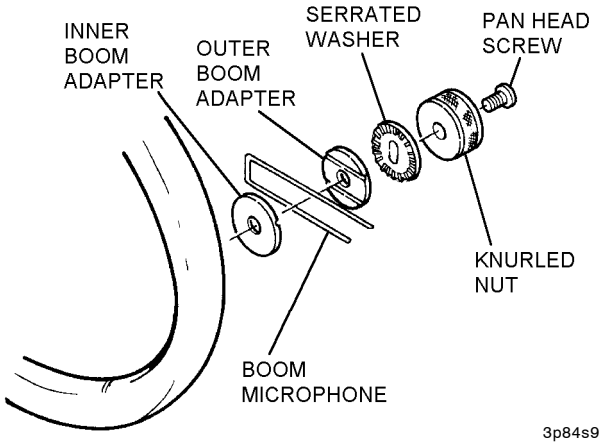

Steps 9 and 10 - Para 3-84

11. If the CX-4434/U extension cable assembly was removed from the boom microphone assembly, loosen two setscrews on the microphone, install plug of cable assembly, and tighten setscrews.

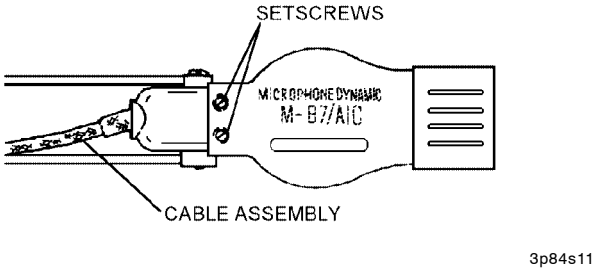

Step 11 - Para 3-84

NOTE

If 13-inch CX-4434/U extension cable assembly is used, loosely wrap excess cable around boom swivel assembly prior to connection.

12. Connect plug of CX-4434/U extension cable assembly to communications cable connector.

13. Loosen swivel assembly, adjust extension and angle of boom assembly, and re-tighten swivel assembly to check installation.

14. Functionally check helmet assembly communications in accordance with the procedures in NAVAIR 17-15BC-22, using TTU-489 Oxygen Tester (P/N 1827AS100-1/NIIN 01-317-7799.)

15. Install the outer and inner visors in accordance with paragraph 3-76.

16. Document in accordance with OPNAVINST 4790.2 Series.

3-85. Replacement of Boom Swivel Assembly. To replace a boom swivel assembly, proceed as follows:

Materials Required

Quantity	Description	Reference Number
1	Boom Swivel Assembly	765AS300-1
As Required	Adhesive, Polychloroprene, Class 3	MIL-A-5540 NIIN 00-515-2246

1. Remove the outer and inner visor assemblies in accordance with paragraph 3-76, to prevent damage during maintenance.

2. Remove the boom microphone assembly from the boom swivel assembly in accordance with paragraph 3-84.

3. On the side of the helmet to which the boom swivel assembly is mounted, pull the earcup assembly away from the pile fastener on the inside.

4. Pull the pile fastener back to expose the screw attaching the boom swivel assembly to the helmet.

5. Remove the screw and washer from the inside of the helmet assembly.

6. Gently pry the flat washer from the shaft of the swivel assembly.

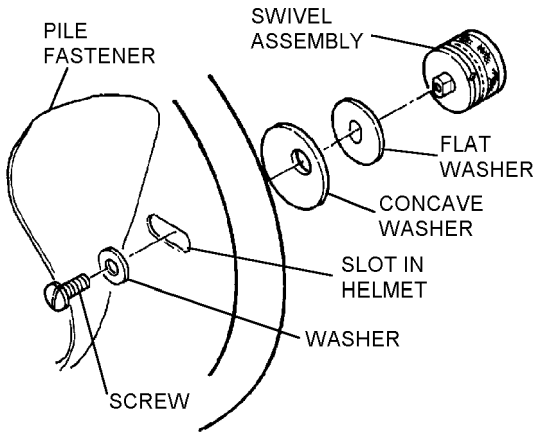

Steps 4 thru 6 - Para 3-85

7. Install the new swivel assembly with the cupped side of the concave washer against the outside of the helmet assembly. Secure with screw and washer; tighten screw.

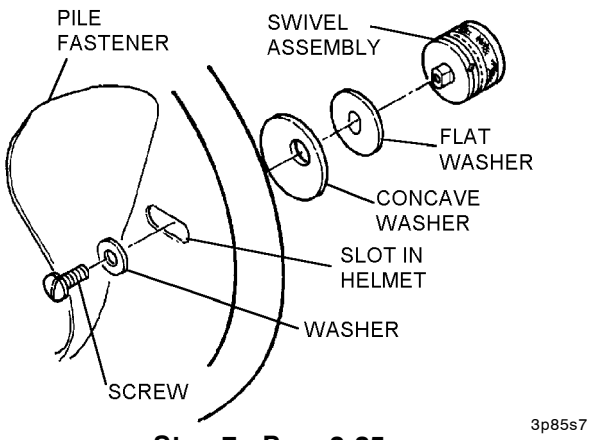

Step 7 - Para 3-85

8. Using adhesive, reattach the pile fastener to the helmet shell assembly.

9. Reinstall the earcup assembly onto pile section of helmet assembly.

10. Reinstall the boom microphone assembly in accordance with paragraph 3-84.

11. Reinstall inner and outer visor assemblies in accordance with paragraph 3-76.

12. Document in accordance with OPNAVINST 4790.2 Series.

3-86. Replacement of Amp Mounting Bracket. To replace the amp mounting bracket, proceed as follows:

Materials Required

Quantity	Description	Reference Number
1	Amp Mounting Bracket	80B4881 (CAGE 97427) NIIN 01-128-5334
As Required	Adhesive, Polychoroprene	MIL-A-5540 NIIN 00-515-2246
As Required	Adhesive, RTV 102/732	MIL-A-46106 NIIN 00-877-9872

1. Disconnect all applicable cables from M23595/1-2 (AM-3597C/A) amplifier.

2. Loosen screw attaching amp mounting bracket to helmet shell assembly.

3. Remove amplifier from amp mounting bracket.

4. Remove earpad assembly and loosen pile fastener tape.

5. Remove screw, washer, and post securing amp mounting bracket to helmet shell assembly.

6. Discard defective amp mounting bracket.

NOTE

A small amount of RTV may be applied to the first few threads of screws prior to installation.

7. Insert replacement amp mounting bracket onto helmet shell assembly and secure with 8-32 x 1/4-inch screw, flat washer, and post. Do not tighten screw.

8. Install amplifier into amp mounting bracket and tighten screw.

9. Connect applicable cable assemblies to amplifier.

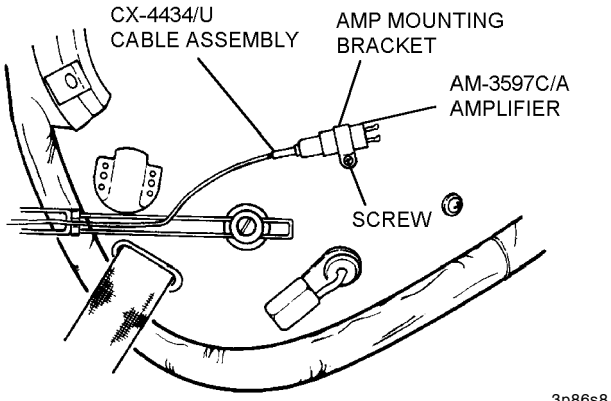

Steps 8 and 9 - Para 3-86

10. Recement pile fastener tape to helmet shell using polychloroprene adhesive.

11. Reinstall earpad assembly.

12. Document in accordance with OPNAVINST 4790.2 Series.

3-87. Replacement of M23595/1-2 (AM-3597C/A) Amplifier. To replace the M23595/1-2 (AM-3597C/A) amplifier, proceed as follows:

Materials Required

Quantity	Description	Reference Number
1	Amplifier, AM-3597C/A	M23595/1-2 NIIN 00-100-4932

1. Disconnect all applicable cables from amplifier.

2. Loosen screw attaching amp mounting bracket to helmet shell assembly.

3. Remove and discard defective amplifier.

4. Install replacement AM-3597C/A amplifier into amp mounting bracket and tighten screw.

5. Connect applicable cable assembly to amplifier.

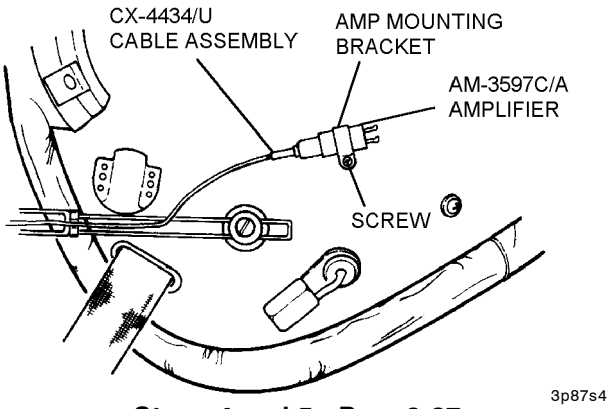

Steps 4 and 5 - Para 3-87

6. Document in accordance with OPNAVINST 4790.2 Series.

3-88. REPAIR OF INTEGRATED CHIN/NAPE ASSEMBLY COMPONENTS. Repair of the integrated chin/nape assembly is limited to replacement of the nape pad, chin strap, clamp, chin pad, or T-nut. To replace the entire assembly, use paragraph 3-93. To repair the integrated chin/nape assembly, determine the required parts and proceed as follows:

Materials Required

Quantity	Description	Reference Number
1	Nape Pad, Medium	90D7865-1
	-or-	
1	Nape Pad, Large	90D7865-2
	-or-	
1	Nape Pad, Extra-Large	90D7865-3
	-or-	
1	Chin pad	93B8456
	-or-	
1 or 2	Clamp Assembly - Nape strap	93B8471
	-or-	
1	Chin strap	90B7868

Materials Required (Cont)

Quantity	Description	Reference Number
1 or 2	T-nut	10-32
As Required	Adhesive, RTV 102/732	MIL-A-46106 NIIN 00-877-9872

3-89. Replacement of Nape Pad. To replace nape pad on the integrated chin/nape assembly, proceed as follows:

1. Remove the outer and inner visor assemblies in accordance with paragraph 3-76, to prevent damage during maintenance.

2. Squeezing the sides of the thermoplastic liner together, remove TPL from the helmet.

3. Detach the left and right earcup assemblies from the pile fastener inside helmet assembly, and position earcups clear of the work area.

NOTE

Observe how the nape straps are laced through the nape pad and helmet before disassembling. Make a note indicating whether the single D-ring nape strap is routed through the slot on the right-hand or left-hand side of the helmet.

4. Remove the screws, washers, lock washers, and T-nuts fastening the nape straps to the left and right rear of the helmet assembly. Retain the screws, washers, and T-nuts for reinstallation.

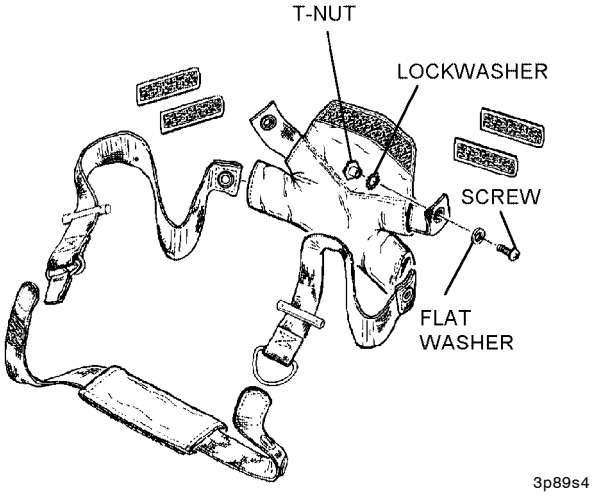

Step 4 - Para 3-89

5. Remove the nape straps from the nape pad. Remove and retain spacer pads from the nape pad for later use in helmet fitting.

NOTE

The hook fastener strip at the top of the nape pad should face the inside of the helmet assembly.

To ease lacing of the straps through the pad, you may use a piece of wire with a hook at one end.

6. Pass the right-hand nape strap through the replacement nape pad from lower right to upper left.

7. Pass the left-hand nape strap through the nape strap pad from lower left to upper right.

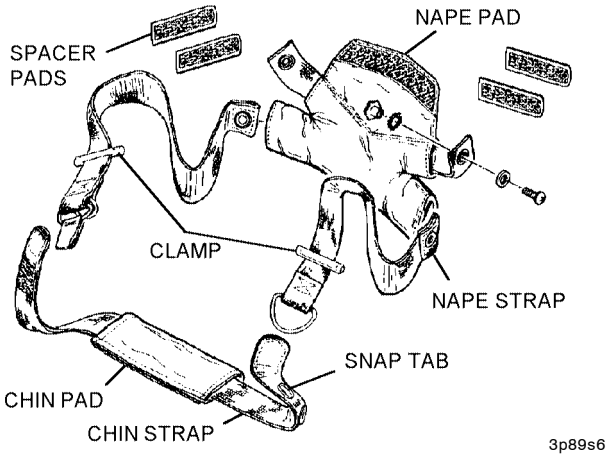

Steps 6 and 7 - Para 3-89

8. Apply a small amount of RTV adhesive to the first few threads of one nape strap screw. Install the T-nut, lockwasher, washer, and screw to fasten the nape strap to the RH side of the helmet.

NOTE

If utilizing the radio frequency cable assembly, a strain relief plate will be installed under the T-nut for attachment of the radio frequency cable assembly staycord.

9. Apply a small amount of RTV adhesive to first few threads of nape strap screw, then install T-nut lockwasher and nape strap. Reattach to helmet shell with washer and screw.

10. Squeezing the sides of the TPL assembly to clear the earcups, align the front of the TPL assembly with the front edge of the energy-absorbing liner.

11. Attach the rear of the TPL assembly to the hook fastener on the rear of the energy-absorbing liner. Ensure that the TPL assembly is positioned against the energy-absorbing liner.

12. Reinstall the earcups onto pile section of helmet assembly.

13. Fit helmet in accordance with paragraph 3-53. Spacer pads will be reinstalled during fitting.

14. Reinstall inner and outer visor assemblies in accordance with paragraph 3-76.

15. Document in accordance with OPNAVINST 4790.2 Series.

3-90. Replacement of Chin Strap Assembly. To replace the chin strap on the integrated chin/nape assembly, proceed as follows:

1. Unlace the chin strap from the double D-rings.

2. Unsnap the other end of the chin strap from the single D-ring.

3. Remove the chin pad from the chin strap.

4. Slide the chin pad onto the replacement chin strap.

NOTE

Ensure that the pile side of the chin pad will face outward when the helmet is worn.

5. Insert the snap end of the chin strap through the single D-ring, and snap it into place.

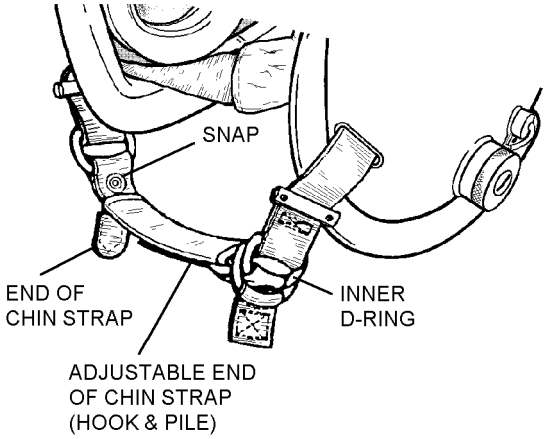

Steps 1 thru 5 - Para 3-90

6. Lace the chin strap through the double D-rings.

7. Document in accordance with OPNAVINST 4790.2 Series.

3-91. Replacement of Clamp. To replace clamp on the integrated chin/nape assembly, proceed as follows:

1. Remove the screws attaching the clamp to the nape strap, and remove the clamp from the nape strap.

2. Attach the replacement clamp to the nape strap at the desired position.

3. Secure the clamp with screws. Tighten screws.

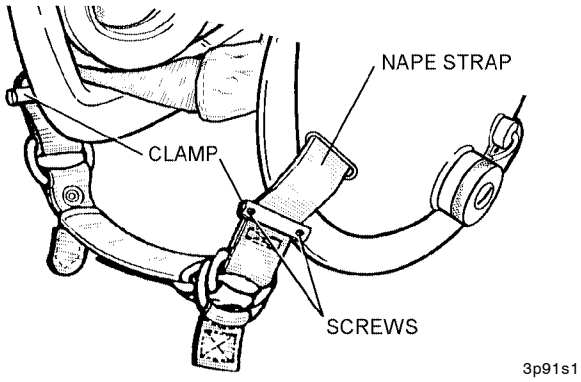

Steps 1 thru 3 - Para 3-91

4. Check helmet fit and adjust napestraps in accordance with paragraph 3-53.

5. Document in accordance with OPNAVINST 4790.2 Series.

3-92. Replacement of Chin Pad. To replace a chin pad on the integrated chin/nape assembly, proceed as follows:

1. Unsnap chin strap from single D-ring and slide chin pad off chinstrap.

2. Slide a replacement chin pad onto the chin strap, ensuring that the pile side of the chin pad will face outward when the helmet is worn.

3. Route chin strap through single D-ring and snap into place.

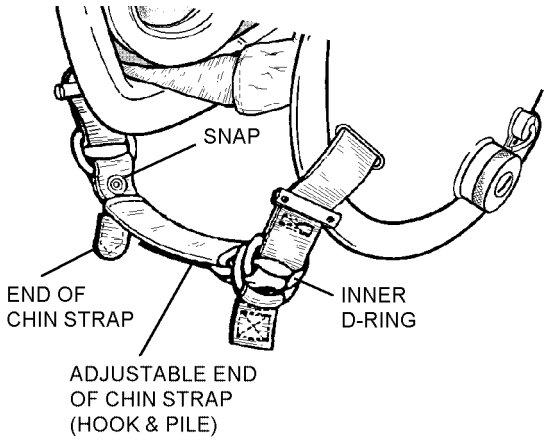

3p92s1

Steps 1 thru 3 - Para 3-92

4. Document in accordance with OPNAVINST 4790.2 Series.

3-93. REPLACEMENT OF INTEGRATED CHIN/NAPE ASSEMBLY. Paragraph 3-88 covers authorized repairs to the integrated chin/nape assembly. To replace the entire integrated chin/nape assembly, proceed as follows:

Materials Required

Quantity	Description	Reference Number
1	Integrated Chin/Nape Assembly, Medium	90C7864-1
1	Integrated Chin/Nape Assembly, Large	90C7864-2
1	Integrated Chin/Nape Assembly, Extra-Large	90C7864-3

Materials Required (Cont)

Quantity	Description	Reference Number
1	Integrated Chin/Nape Assembly, Extra-Large-Wide	90C7864-4
1	Nape Pad, Medium	90D7865-1
1	Nape Pad, Large	90D7865-2
1	Nape Pad, Extra-Large	90D7865-3
1	Nape Pad, Extra-Large-Wide	90D7865-4
As Required	Adhesive, RTV 102/732	MIL-A-46106 NIIN 00-877-9872

1. To remove the integrated chin/nape assembly, proceed as follows:

a. Remove the outer and inner visor assemblies in accordance with paragraph 3-76, to prevent damage during maintenance.

b. Squeezing the sides of the thermoplastic liner together, remove TPL from the helmet.

c. Detach the left and right earcup assemblies from the pile fastener inside helmet assembly, and position earcups clear of the work area.

NOTE

Note how the nape straps are laced through the nape pad and helmet before disassembling. Make a note indicating whether the single D-ring nape strap is routed through the slot on the right or left side of the helmet.

d. Remove the screws, flat washers, lock washers, and T-nuts fastening the nape straps to the left and right rear of the helmet assembly. Retain the screws, washers, and T-nuts for reinstallation.

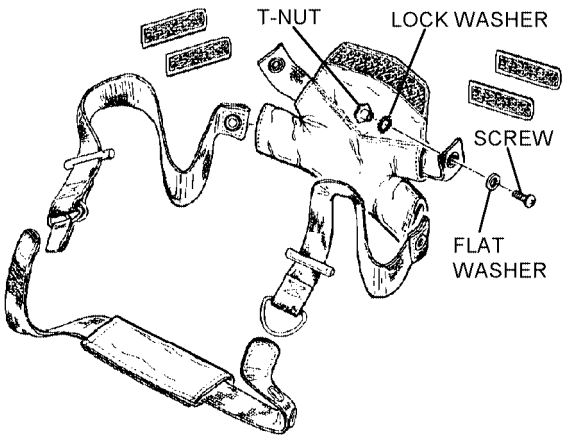

3p93s1d

Step 1d - Para 3-93

e. Remove the nape straps from the nape pad. Do not remove spacer pads from nape pad.

f. Withdraw the nape straps through the slots in the helmet assembly.

2. To install the replacement integrated chin/nape assembly, proceed as follows:

a. A new integrated chin/nape assembly is not fully assembled, to allow for installation according to aircrewmember preference for either right-hand or left-hand use. Install the new assembly with the single D-ring strap on the same side noted above before disassembly.

b. Lace the single D-ring nape strap through the right or left-hand slot; depending on aircrewmember preference.

NOTE

The hook fastener strip at the top of the nape pad should face forward inside the helmet assembly. To ease lacing of the straps through the pad, you may use a piece of wire with a hook at one end.

c. Pass the nape strap through the nape pad from lower right to upper left (if strap was installed on right) or lower left to upper right (if strap was installed on left).

d. Lace the double D-ring nape strap through the opposite helmet slot.

e. Pass the strap through the nape pad from lower left to upper right (if installed on left) or lower right to upper left (if installed on right).

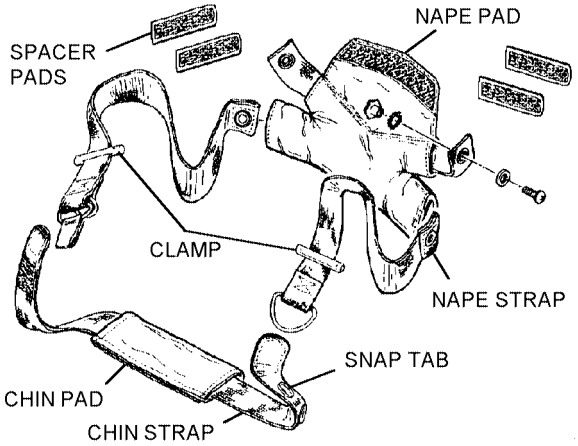

3p93s2b

Steps 2b thru 2e - Para 3-93

f. Apply RTV adhesive to one nape strap screw. Install the T-nut, lockwasher, washer and screw to fasten the nape strap to the RH side of the helmet.

NOTE

If utilizing the radio frequency cable assembly, a strain relief plate will be installed under the T-nut for attachment of the radio frequency cable assembly staycord.

g. Apply RTV adhesive to nape strap screw, then install T-nut, lockwasher, and nape strap. Fasten to helmet with washer and screw.

h. If the clamp assemblies, chin pad, or chin strap were not installed on the replacement assembly, install them in accordance with paragraph 3-88.

3. Reinstall the TPL assembly as follows:

a. Squeezing the sides of the TPL assembly to clear the earcups, align the front of the TPL assembly with the front edge of the energy-absorbing liner. Two large holes on top of TPL are forward.

b. Attach the rear of the TPL assembly to the hook fastener on the rear of the energy-absorbing liner. Ensure that the TPL assembly is positioned against the energy-absorbing liner.

4. Reinstall the earcups onto pile section of helmet assembly.

5. Fit helmet in accordance with paragraph 3-53. Spacer pads will be installed onto nape pad during fitting.

6. Reinstall inner and outer visor assemblies in accordance with paragraph 3-76.

7. Document in accordance with OPNAVINST 4790.2 Series.

3-94. REPLACEMENT OF ENERGY-ABSORBING LINER. Replace energy-absorbing liner as follows:

Support Equipment Required

Quantity	Description	Reference Number
1	Spatula, Metal	GGG-C-74G TY18GRD NIIN 00-680-2634

Materials Required

Quantity	Description	Reference Number
1	Energy-Absorbing Liner, Medium	90D7860
	-or-	
1	Energy-Absorbing Liner, Large	90D7861
	-or-	
1	Energy-Absorbing Liner, Extra-Large	90D7862
	-or-	
1	Energy-Absorbing Liner, Extra-Large Wide	90D7863
As Required	Adhesive, RTV 102/732	MIL-A-46106 NIIN 00-877-9872

1. To remove the TPL and energy-absorbing liner assemblies, proceed as follows:

a. Remove the outer and inner visor assemblies in accordance with paragraph 3-76, to prevent damage during maintenance.

b. Invert the helmet on a padded work surface.

c. Detach the right and left earcup assemblies from the pile fastener on the inside of the helmet assembly, and position the earcups clear of the work area.

d. Squeezing the sides of the TPL assembly together, remove TPL from the helmet.

e. Remove the screws, washers, lockwashers, and T-nuts securing the chin/nape straps to the rear of the helmet assembly. Reattach loose hardware to straps. Allow the straps to hang outside the helmet assembly.

f. Mark the centerline of the liner and helmet shell at the brow and nape before removing.

CAUTION

Use extreme caution when removing energy-absorbing liner assembly to prevent damage to NVIIS or gunsight wiring harness assemblies routed beneath liner.

Use of liner removal aids, other than the approved metal spatula or a 1-inch x 12-inch flexible metal machinists rule, to remove the energy absorbing liner is not authorized. Use of unauthorized removal aids will damage the liner, which will result in reduced impact protection.

g. With the helmet inverted on the work surface and the helmet front facing you, insert a thin, metal spatula or a metal ruler (12 inches x 1 inch) between the helmet shell and the energy-absorbing liner at the nape of the helmet.

h. Using the spatula/metal ruler, gently pry inward and upward on energy absorbing liner to obtain enough clearance to allow grasping the liner nape with the free hand.

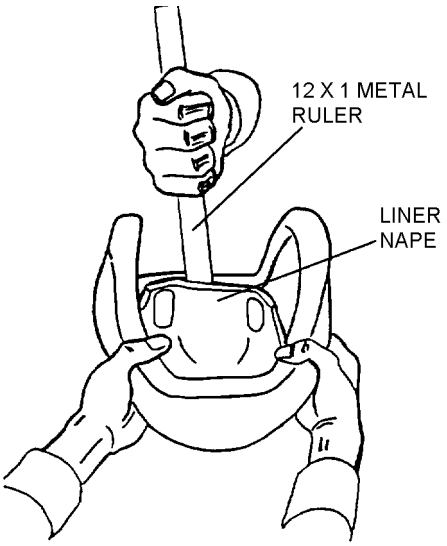

Step 1h - Para 3-94

i. Maintain inward and upward pressure withdrawing the liner rearward from the helmet. Rotate the liner as required to clear the helmet shell earcup cavities.

2. To install the replacement energy-absorbing liner and TPL assemblies, proceed as follows:

CAUTION

The energy absorbing liner assembly is installed tightly over the NVIIS and HSA wiring harness assemblies at the interior brow area of the helmet. Use of the webbing cradle, as a positioning aid, during liner installation procedures will prevent damage to either wiring harness. Also, avoid placing undue pressure on the receptacle and receptacle bracket on the outside of the helmet.

NOTE

Proper installation of the energy-absorbing liner is critical for proper alignment of the goggles to the aircrewmember's eyes. Incorrect installation may cause restrictions to the range of view through the goggles.

a. Mark centerline of liner brow and nape to use as a reference during installation.

NOTE

Before inserting the liner, ensure that all attaching hardware that will be covered by the liner is in place. Make sure both wiring harnesses are undamaged and properly attached.

b. Invert the helmet assembly on a padded surface to prevent damage to the receptacle assembly. Position helmet with the brow away from the technician. Move wiring harness retaining sleeves outboard, away from area to be occupied by the liner.

c. As an aid for repositioning the liner, cut a 36-inch length of type VI webbing and place the webbing inside helmet from brow to nape.

d. Holding the liner by the nape, insert the brow downward into the helmet between the two earcup cavities.

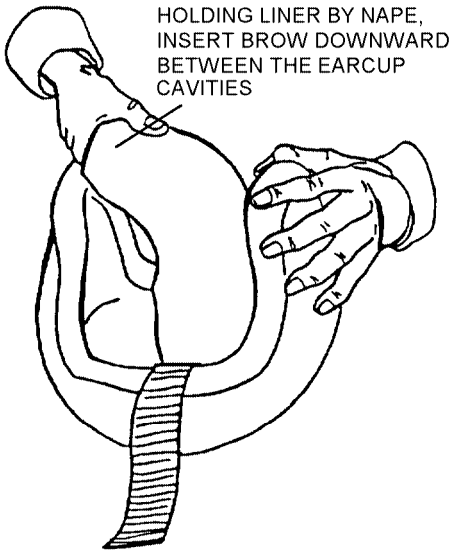

3p94s2d

Step 2d - Para 3-94

e. Slowly rotate the liner brow toward the helmet brow until centerline mark on liner brow can be aligned with centerline of helmet brow.

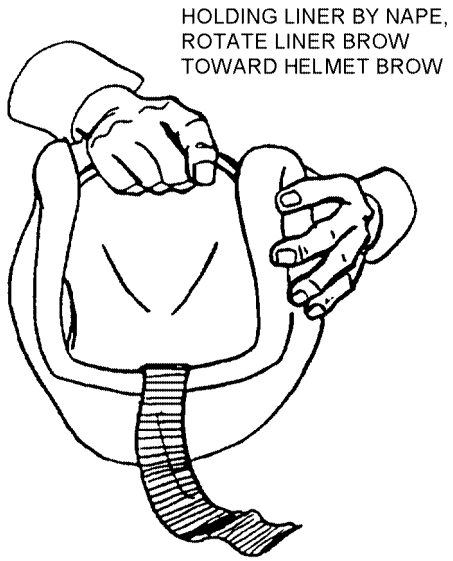

3p94s2e

Step 2e - Para 3-94

f. With brow centerlines aligned, and the liner centered within the helmet, grasp free ends of webbing and bring together over center of inverted helmet. Slide hand downward on webbing and grasp firmly to slightly compress both ends of the liner inward, while maintaining compression, move brow of liner forward over the mounting block backup plate and into contact with the inner surface of the helmet brow edgeroll. Ensuring

brow alignment is established, while maintaining compression, gently but firmly apply downward pressure on liner nape to seat crown of liner against helmet shell interior surface. Release tension on webbing cradle to relax liner compression.

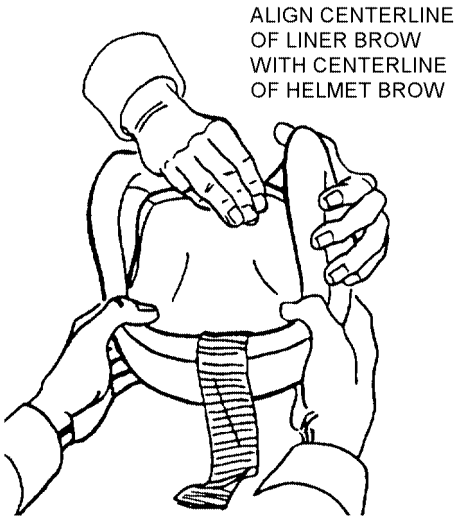

3p94s2f

Step 2f - Para 3-94

g. Press the nape of the liner downward past the nape edgeroll, while ensuring the liner brow is in firm contact with the inner surface of helmet brow edgeroll.

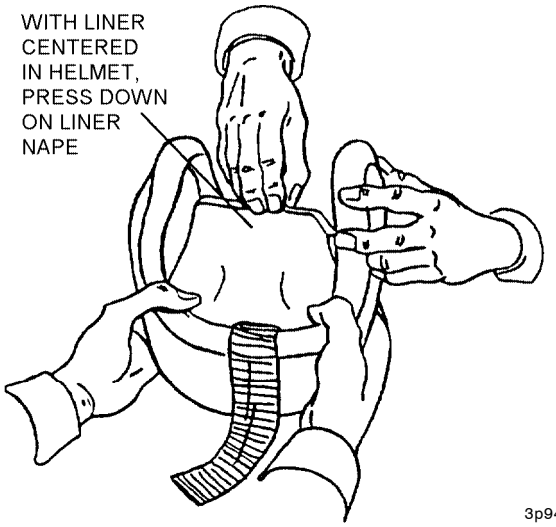

3p94s2g

Step 2g - Para 3-94

h. When the liner is seated in the helmet, pull the compressed nape edgeroll from beneath the liner.

i. Check the liner for centerline alignment at the brow and nape. Check for firm contact between the liner brow and the helmet brow edgeroll. An improperly installed liner will misalign gunsight and NVIIS accessories.

j. If realignment of liner is necessary, compress liner with webbing cradle and adjust position as required.

3p94s2j

Step 2j - Para 3-94

k. Work liner into correct position, then press down on liner nape to seat the liner. Repeat liner loosening and adjustment as necessary until liner is correctly positioned in the helmet assembly.

l. Remove repositioning webbing by slowly pulling on end of webbing at front of helmet.

3. If four 1-inch x 2-inch pressure-sensitive hook fastener tabs are not present on the inside surface of the energy-absorbing liner, install tabs as follows:

a. Install two tabs on the inside front of the liner left and right of center over the eyes, 1/8 inch from front edge of the liner.

b. Install two tabs in the rear approximately 1 1/2 inches right and left of the centerline, and 1/2 inch from the bottom edge of the liner.

NOTE

Ensure that the chin/nape straps are routed through the nape pad and are not twisted.

4. Apply a small amount of RTV adhesive to first few threads of one nape strap screw. Install the T-nut, lockwasher, washer, and screw to fasten the RH nape strap to the RH side of the helmet.

NOTE

A rubber coated loop clamp anchors the NVIIS connector to the helmet shell to prevent stress of normal use and potential failure of connector cable.

When loop clamp is installed the external washer is not required.

If utilizing the radio frequency cable assembly, a strain relief plate will be installed under the left hand side T-nut for attachment of the radio frequency cable assembly staycord.

5. Replace left hand nape strap as follows:

a. Place communications cable strain relief plate (if required) on T-nut followed by lockwasher and left-side nape strap. Insert T-nut assembly into its position in helmet.

b. Slide NVIIS connector into loop clamp and center clamp at mid point of connector with red dot on connector facing aft.

c. Insert attaching screw through holes in loop clamp. Apply a small amount of RTV adhesive to first few threads of screw and reinstall in T-nut to secure internal and external assemblies to helmet.

d. Rotate grommet as necessary to align with NVIIS cable.

6. Reinstall the earcups onto pile section of helmet assembly.

7. Reinstall the TPL assembly as follows:

a. Squeezing the sides of the TPL assembly to clear the earcups, align the front of the TPL assembly with the front edge of the energy-absorbing liner. Two large holes on top of TPL are forward.

b. Attach the rear of the TPL assembly to the hook fasteners on the rear of the energy-absorbing liner. Ensure that the TPL assembly is positioned against the energy-absorbing liner.

8. Check helmet fit in accordance with paragraph 3-53.

9. Reinstall inner and outer visor assemblies in accordance with paragraph 3-76.

10. Document maintenance actions in accordance with OPNAVINST 4790.2 Series.

3-95. REPLACEMENT OF BAYONET RECEIVERS (HGU-84/P). To replace defective bayonet receivers proceed as follows:

Materials Required

Quantity	Description	Reference Number
1	Bayonet Receiver Assembly	93A8514
As Required	Adhesive, Polychloroprene, Class 3	MIL-A-5540 NIIN 00-515-2246

1. Remove the earcups from the helmet.

2. Pull the earcup cavitiy pile fastener away from the inner surface of the helmet shell.

3. Remove the screws attaching the right and/or left bayonet receiver assemblies to the helmet shell.

4. Discard the defective bayonet receiver assembly.

NOTE

Each spacer should be fitted against the rivet head side of the bayonet receiver.

A small amount of RTV may be applied to first few threads of each screw before lock washer and backplate are added.

5. Insert the screws with the lock washers through the backplate from the inside of the helmet shell. Attach the replacement bayonet receivers and spacers to the outside of the helmet shell. Ensure that the projections on the bayonet receivers are pointed toward the rear of the helmet shell.

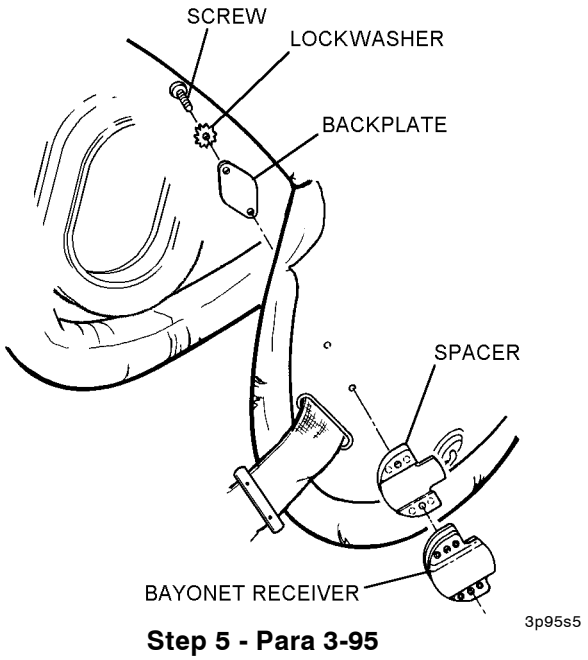

Step 5 - Para 3-95

6. Tighten all screws so that the bayonet receivers and spacers are firmly attached to the helmet shell.

7. Reattach earcup cavity pile fastener using polychloroprene adhesive.

8. Install earcups onto pile section of helmet shell assembly.

9. Document in accordance with OPNAVINST 4790.2 Series.

3-96. REPLACEMENT OF CBR SNAP FASTENER STUD. Replace defective CBR snap fastener stud on the MCK-3A/P, Rotary Wing upgrade or MBU-21/P mask as follows:

Materials Required

Quantity	Description	Reference Number
1	MCK-3A/P Helmet Modification Kit	91B8215
1	MBU-21/P Helmet Modification Kit	CL 6616
As Required	Adhesive, RTV 102/732	MIL-A-46106 NIIN 00-877-9872

1. Remove the outer and inner visors in accordance with paragraph 3-76 to prevent damage during maintenance.

2. Detach the earcup assembly away from the pile fastener on the inside.

3. Remove the screw, hex nut, and lockwasher attaching the stud to the helmet.

4. Apply a small amount of RTV adhesive to first few threads of screw. Attach the new snap fastener stud to the helmet with the screw, lockwasher, and hex nut, as shown below.

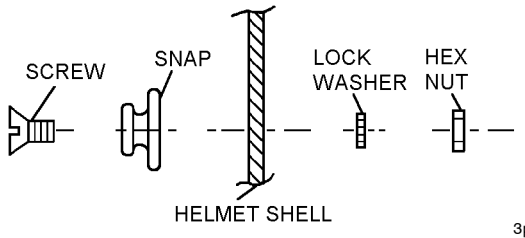

Step 4 - Para 3-96

5. Reinstall the earcup assembly onto pile section of helmet assembly.

6. Check helmet fit in accordance with paragraph 3-53.

7. Install the inner and outer visors in accordance with paragraph 3-76.

8. Document in accordance with OPNAVINST 4790.2 Series.

3-97. REPLACEMENT OF VISOR SNAP FASTENER STUD. Replace visor snap fastener stud on side of helmet assembly as follows:

Materials Required

Quantity	Description	Reference Number
1	Snap Fastener Stud #4	MS27983-3
As Required	Adhesive, RTV 102/732	MIL-A-46106 NIIN 00-877-9872

1. Remove the outer and inner visors in accordance with paragraph 3-76, to prevent damage during maintenance.

2. On the side of the helmet where the snap fastener stud is to be replaced, remove the earcup assembly.

3. Remove the screw, hex nut, and lockwasher attaching the stud to the helmet.

4. Apply a small amount of RTV adhesive to first few threads of the screw. Attach the new snap fastener stud to the helmet with the screw, lockwasher, and hex nut, as shown below.

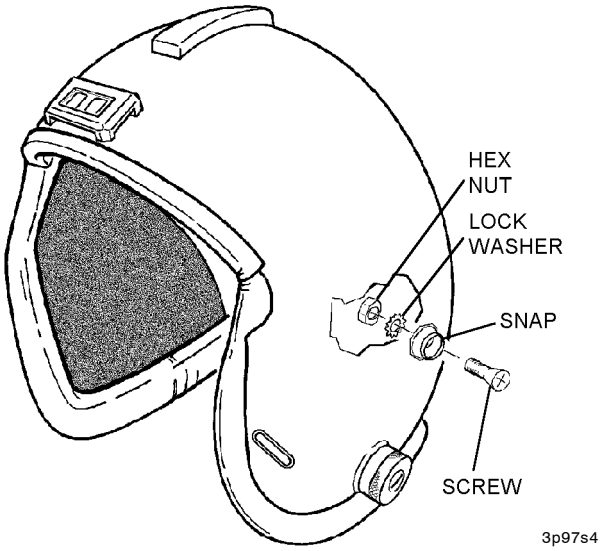

Step 4 - Para 3-97

5. Reinstall the earcup onto pile section of helmet assembly.

6. Check helmet fit in accordance with paragraph 3-53.

7. Install the inner and outer visors in accordance with paragraph 3-76.

8. Document in accordance with OPNAVINST 4790.2 Series.

3-98. REPLACEMENT OF HELMET BLOCK ASSEMBLY. Replace helmet block assembly as follows:

Materials Required

Quantity	Description	Reference Number
1	Helmet Block Assembly	3151AS130-1
As Required	Tape, Pressure Sensitive, 2-Inch Wide	PPP-T-60-91B Type IV, Class 1
As Required	Adhesive, RTV 102/732	MIL-A-46106 NIIN 00-877-9872

1. Remove the outer and inner visors in accordance with paragraph 3-76 to prevent damage during maintenance.

2. Remove the TPL and energy-absorbing liner assemblies in accordance with paragraph 3-94, and set aside.

3. Invert helmet on the work surface, with the brow turned away from the technician. Detach both the NVIIS and gunsight wiring harness retention sleeves from pile fastener tape inside the helmet.

4. Remove pressure-sensitive tape covering backup plate inside brow of helmet.

5. Remove four screws and washers securing the backup plate to the helmet block assembly.

6. Lift the helmet block with attached NVIIS and gunsight terminal blocks away from the helmet, withdrawing the wiring harness cables slightly from the exit hole. Do not pull on NVIIS or gunsight cables, if installed.

7. Remove screw and washer holding the terminal block retainer in place. Holding the two terminal blocks and retainer together, remove and discard the helmet block assembly.

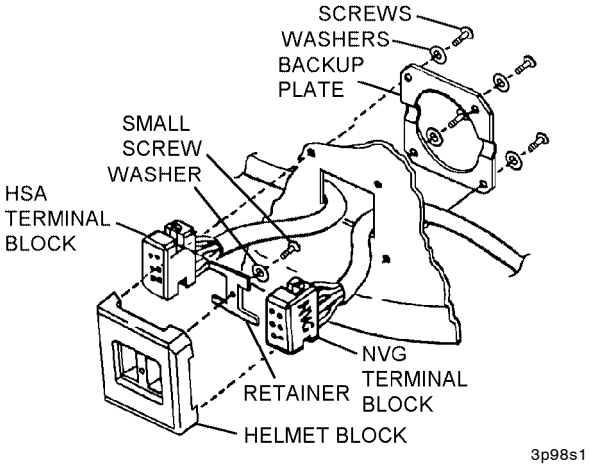

Steps 1 thru 7 - Para 3-98

NOTE

The terminal block retainer is designed to prevent improper installation of the two wiring harness terminal blocks. The arms of the retainer are of different lengths and widths to accommodate specific foolproofing shapes in the terminal blocks. The NVIIS terminal block is marked NVIIS, and the gunsight terminal block is marked HSA for ease of identification.

8. If terminal blocks and retainer were not held together, position terminal blocks of gunsight wiring harness assembly and NVIIS wiring harness assembly on terminal block retainer. Hold in place.

NOTE

The longer legs on the rear of the helmet block should be toward the edgeroll; the shorter legs should be toward the top of the helmet.

The NVG terminal block should be on the LH side; the HSA terminal block should be on the RH side.

9. Insert terminal blocks into replacement helmet block assembly, ensuring that the longer legs of the helmet block are toward the edgeroll. Ensure that terminal blocks are installed on the correct sides.

CAUTION

If new self-locking screws are not available, re-use of screw removed is authorized provided the old screw is reinstalled with RTV adhesive.

10. Attach terminal block retainer to helmet block with one small, new screw and washer. Torque screw to 2 in-lbs. Do not over-torque screw.

11. Position the helmet block assembly on the outside of the helmet assembly with longer legs toward edgeroll. Position backup plate on the inside of the helmet, ensuring that the NVIIS cable exits under the LH channel and the HSA cable exits under the RH channel of the backup plate.

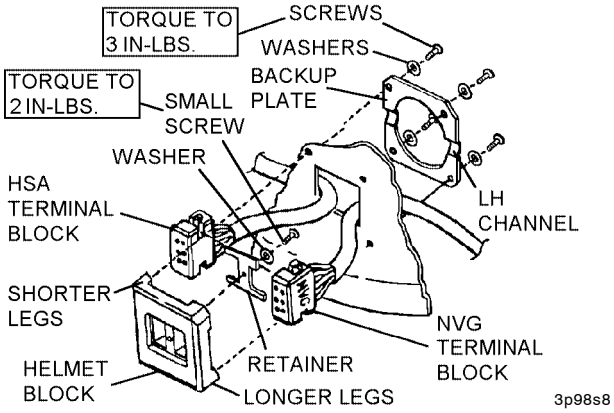

Steps 8 thru 11 - Para 3-98

CAUTION

Ensure that wiring harness cables are not pinched beneath backup plate when tightening screws.

To prevent cracking damage to the legs of the helmet block, do not over-torque screws.

If new self-locking screws are not available, re-use of screws removed is authorized provided that the old screw is reinstalled with RTV adhesive.

12. Secure the backup plate with four new screws and washers. Torque screws to 3 in-lbs. Do not pinch cables and do not over-torque screws.

13. Cover backup plate with a 3 x 2-inch piece of pressure-sensitive tape.

14. Inside helmet, route gunsight and NVIIS wiring harnesses outboard, and attach hook fastener of retainer sleeves to pile fastener on helmet. Ensure that cables are not loose and are flat against helmet shell.

15. Install the energy-absorbing liner and TPL assemblies in accordance with paragraph 3-94.

16. Check helmet fit in accordance with paragraph 3-53.

17. Install inner and outer visor assemblies in accordance with paragraph 3-76.

18. Document in accordance with OPNAVINST 4790.2 Series.

3-99. REPLACEMENT OF NVIIS WIRING HARNESS ASSEMBLY. Repair of the NVIIS wiring harness assembly is limited to replacement of the heat shrinkable sleeving, loop clamp, and attaching hardware. Replace NVIIS wiring harness and helmet block assemblies as follows:

Materials Required

Quantity	Description	Reference Number
1	NVIIS Wiring Harness Assembly	3151AS135-1
1	Sleeving, Heat Shrinkable, 1/2 to 5/8-Inch Long	M23053/5-108-0 MIL-I-23053/5
As Required	Tape, Pressure Sensitive, 2-Inch Wide	PPP-T-60-91B Type IV, Class 1
As Required	Adhesive, RTV 102/732	MIL-A-46106 NIIN 00-877-9872

1. Remove the outer and inner visors in accordance with paragraph 3-76 to prevent damage during maintenance.

2. Remove the TPL and energy-absorbing liner assemblies in accordance with paragraph 3-94, and set aside.

3. Invert helmet on padded work surface, with the brow turned away from the technician.

4. Remove screw, washer, post, and loop clamp securing electrical connector to back of helmet. Remove shrink sleeving from connector.

5. Detach both the NVIIS and gunsight wiring harness retention sleeves from pile fastener tape inside the helmet.

6. Working from the exterior inward, dislodge the rubber grommet encircling the NVIIS wiring harness cable, and feed the free end of the cable with the electrical connector into the helmet.

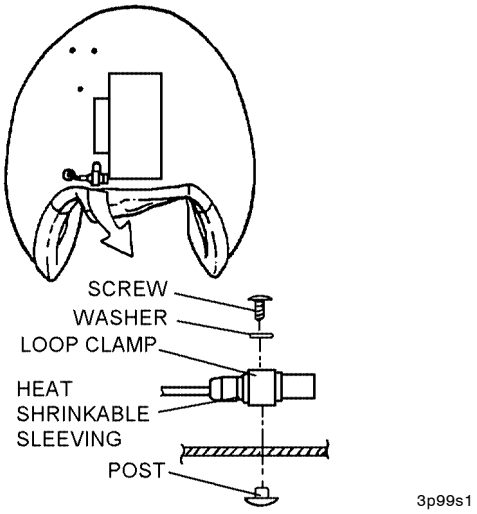

Steps 1 thru 6 - Para 3-99

7. Remove pressure-sensitive tape covering backup plate inside helmet brow.

8. Remove four screws, washers, and backup plate securing the helmet block to the helmet assembly.

9. Lift the helmet block with attached NVIIS and gunsight terminal blocks away from the helmet, withdrawing the wiring harness cables slightly from the exit hole. Do not pull on NVIIS or gunsight cables.

10. Remove screw and washer holding the terminal block retainer in place. Remove retainer and NVIIS wiring harness assembly.

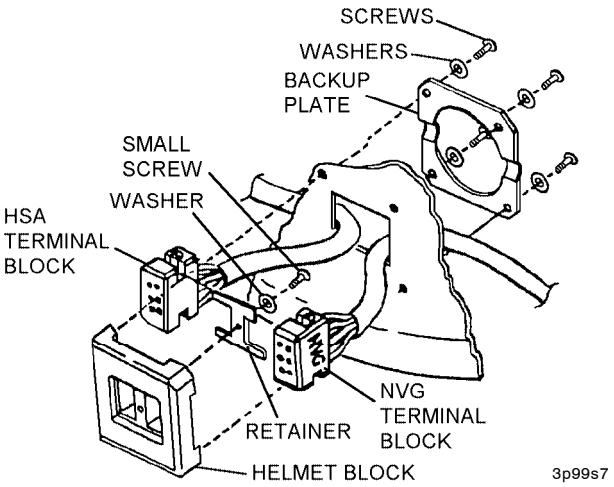

Steps 7 thru 10 - Para 3-99

11. Route connector end of replacement NVIIS cable through hole in back of helmet. Make sure cable is not twisted or crimped.

12. Orient aft slot on cable grommet inboard, and press grommet into hole in helmet shell.

13. Position heat shrinkable sleeving over knurled area on electrical connector. Shrink sleeving.

14. Place loop clamp over sleeving and attach loosely to helmet assembly with screw, washer, and post. Orient red dot on electrical connector aft, and tighten screw.

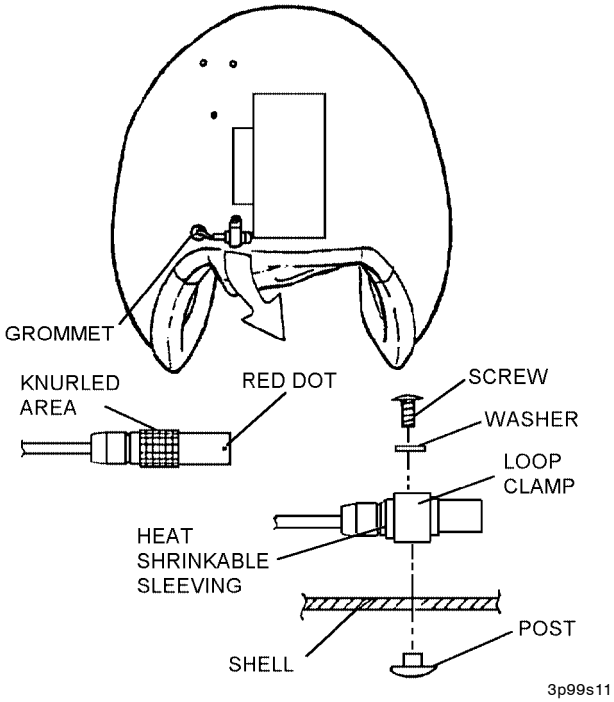

Steps 11 thru 14 - Para 3-99

15. Inside helmet, route gunsight and NVIIS wiring harnesses outboard, and attach hook fastener of retainer sleeves to pile fastener. Ensure that cables are not loose and are flat against helmet shell.

16. Route terminal block of new NVIIS wiring harness assembly through the square hole in front of helmet assembly.

NOTE

The terminal block retainer is designed to prevent improper installation of the two wiring harness terminal blocks. The arms of the retainer are of different lengths and widths to accommodate specific foolproofing shapes in the terminal blocks. The terminal block for the NVIIS is marked NVG, and the gunsight terminal block is marked HSA for ease of identification.

17. Position terminal blocks of gunsight wiring harness assembly and new NVIIS wiring harness assembly on terminal block retainer. Hold in place.

NOTE

The longer legs on the rear of the helmet block should be toward the edgeroll; the shorter legs should be toward the top of the helmet.

The NVG terminal block should be on the LH side; the HSA terminal block should be on the RH side.

18. Insert terminal blocks into helmet block assembly, ensuring that the longer legs of the helmet block are toward the edgeroll. Ensure that terminal blocks are installed on the correct sides.

CAUTION

If new self-locking screws are not available, re-use of screw removed is authorized provided the old screw is reinstalled with RTV adhesive.

19. Attach terminal block retainer to helmet block with one new screw and washer. Torque screw to 2 in-lbs.

20. Position the helmet block assembly on the outside of the helmet assembly with longer legs toward edgeroll. Position backup plate on the inside of the helmet, ensuring that the NVIIS cable exits under the LH channel and the gunsight cable exits under the RH channel of the backup plate.

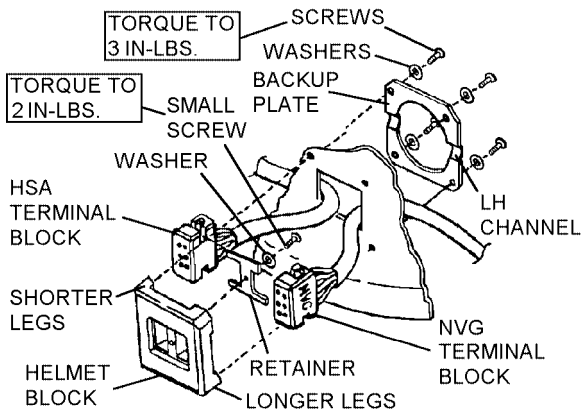

3p99s16

Steps 16 thru 20 - Para 3-99

CAUTION

Ensure that wiring harness cables are not pinched beneath backup plate when tightening screws.

To prevent cracking damage to the legs of the helmet block, do over-torque screws.

If new self-locking screws are not available, re-use of screws removed is authorized provided the old screws are reinstalled with RTV adhesive.

21. Secure the backup plate with four new screws and washers. Torque screws to 3 in-lbs. Do not pinch cables and do not over-torque screws.

22. Cover backup plate with a 3 x 2-inch piece of pressure-sensitive tape.

23. Install the energy-absorbing liner in accordance with paragraph 3-94.

24. Check helmet fit in accordance with paragraph 3-53.

25. Install inner and outer visor assemblies in accordance with paragraph 3-76.

26. Document in accordance with OPNAVINST 4790.2 Series.

3-100. REPLACEMENT OF GUNSIGHT WIRING HARNESS ASSEMBLY (HGU-67/P). Replace gunsight wiring harness assembly as follows:

Materials Required

Quantity	Description	Reference Number
1	Gunsight Wiring Harness Assembly	7636589 NIIN 01-491-0818
As Required	Tape, Pressure-Sensitive, 2-Inch Wide	PPP-T-60-91B, Type IV, Class 1
As Required	Adhesive, Polychloroprene, Class 3	MIL-A-5540 NIIN 00-515-2246
As Required	Adhesive, RTV 102/732	MIL-A-46106 NIIN 00-877-9872

1. Remove the outer and inner visors in accordance with paragraph 3-76 to prevent damage during maintenance.

2. Remove the energy-absorbing liner in accordance with paragraph 3-94 and set aside.

CAUTION

Do not pull on receptacle wires.

3. Carefully peel leather away from edgeroll at nape to expose cable routed beneath leather.

4. Loosen hook fastener flap to release receptacle cable from battery securing patch on back of helmet.

5. Remove screw, washer, lockwasher, and post securing molded strain-relief block to back of helmet.

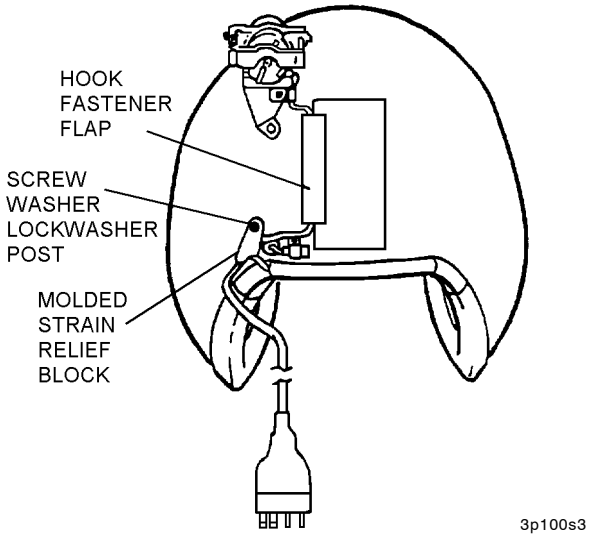

Steps 3 thru 5 - Para 3-100

6. Invert helmet on padded work surface, with the brow turned away from the technician.

7. Detach both the gunsight and NVIIS wiring harness retention sleeves from pile fastener tape inside the helmet.

8. Remove three screws and flat washers securing receptacle bracket assembly to the receptacle doubler inside the helmet. Set receptacle doubler aside.

a. Remove three screws and flat washers attaching receptacle assembly to receptacle bracket assembly. Set aside screws and flat washers

b. De-solder the two wiring harness power leads from their attachment points on the underside of the receptacle assembly.

c. Solder replacement wiring harness power leads to the replacement receptacle assembly attachment points.

9. Remove pressure-sensitive tape covering backup plate inside brow of helmet.

10. Remove four screws, washers, and backup plate securing the helmet block to the helmet assembly.

11. Lift the helmet block with attached HSA and NVG terminal blocks away from the helmet, withdrawing the wiring harness cables slightly from the exit hole. Do not pull on gunsight or NVIIS cables.

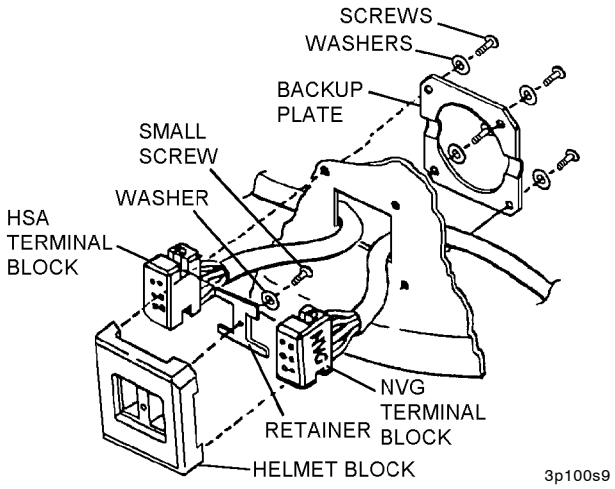

Steps 9 thru 11 - Para 3-100

12. Remove screw and washer holding the terminal block retainer in place. Remove retainer and gunsight wiring harness assembly.

13. Route terminal block of new gunsight wiring harness assembly through the square hole in front of helmet assembly.

NOTE

The terminal block retainer is designed to prevent improper installation of the two wiring harness terminal blocks. The arms of the retainer are of different lengths and widths to accommodate specific foolproofing shapes in the terminal blocks. The terminal block for the NVIIS is marked NVG, and the gunsight terminal block is marked HSA for ease of identification.

14. Position terminal blocks of NVIIS wiring harness assembly and gunsight wiring harness assembly on terminal block retainer. Hold in place.

NOTE

The longer legs on the rear of the helmet block should be toward the edgeroll; the shorter legs should be toward the top of the helmet.

The NVG terminal block should be on the LH side; the gunsight terminal block should be on the RH side.

15. Insert terminal blocks into helmet block assembly, ensuring that the longer legs of the helmet block are toward the edgeroll. Ensure that terminal blocks are installed on the correct sides.

CAUTION

Re-use of screw removed is authorized provided the removed screw is reinstalled with RTV adhesive.

16. Attach terminal block retainer to helmet block with one new small screw and washer. Torque screw to 2 in-lbs. Do not over-torque screw.

17. Position the helmet block assembly on the outside of the helmet assembly with longer legs toward edgeroll. Position backup plate on the inside of the helmet, ensuring that the NVIIS cable exits under the LH channel and the gunsight cable exits under the RH channel of the backup plate.

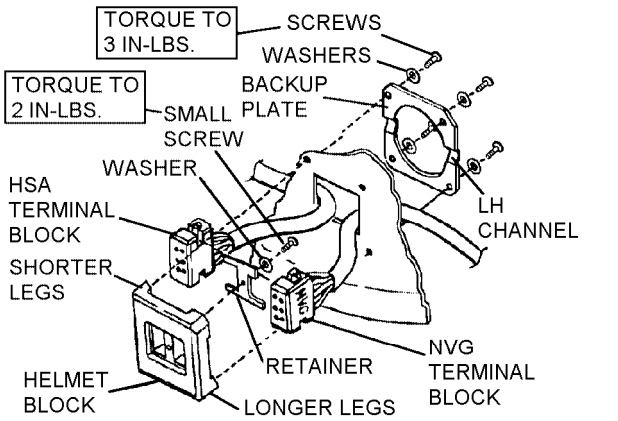

3p100s13

Steps 13 thru 17 - Para 3-100

CAUTION

Ensure that wiring harness cables are not pinched beneath backup plate when tightening screws.

To prevent cracking damage to the legs of the helmet block, do not over-torque screws.

Re-use of screws removed is authorized provided the removed screws are reinstalled with RTV adhesive.

18. Secure the backup plate with four new screws and washers. Torque screws to 3 in-lbs. Do not pinch cables and do not over-torque screws.

19. Cover backup plate with a 3 x 2 inch piece of pressure-sensitive tape.

20. Install receptacle bracket assembly in accordance with paragraph 3-101, steps 7 thru 10.

CAUTION

Re-use of screw removed is authorized provided the removed screw is reinstalled with RTV adhesive.

21. Place washer on screw. Insert screw through strain relief block and install lockwasher on screw. Orient molded strain relief block on back of helmet assembly and secure to post.

22. Align receptacle wiring with edge of battery securing patch, and fold hook fastener flap over cable.

23. Route gunsight wiring harness cable beneath leather of nape edgeroll. Harness should enter at LH corner of leather and make a smooth transition around the edgeroll to inside of helmet. Make sure cable is not twisted or crimped.

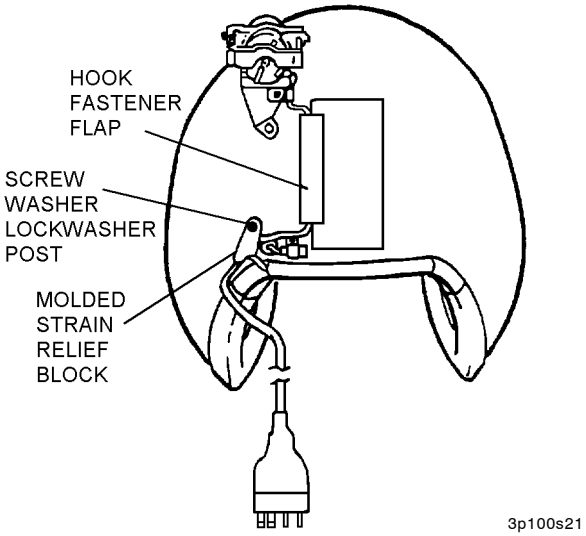

Steps 21 thru 23 - Para 3-100

24. Inside helmet, route gunsight and NVIIS wiring harnesses outboard, and attach hook fastener of retainer sleeves to pile fastener inside helmet. Ensure that harnesses are not loose and are flat against helmet shell.

25. Apply adhesive to inside of helmet, allowing to dry for approximately 30 minutes.

26. Apply adhesive to underside of leather, and apply a second coat to inside of helmet. Allow adhesive to become tacky (approximately 15 minutes).

27. Carefully fold leather over edgeroll and gunsight wiring harness, smoothing out wrinkles and bubbles.

28. Install the energy-absorbing liner and TPL assemblies in accordance with paragraph 3-94.

29. Check helmet fit in accordance with paragraph 3-53.

30. Install inner and outer visor assemblies in accordance with paragraph 3-76.

31. Document in accordance with OPNAVINST 4790.2 Series.

3-101. REPLACEMENT OF RECEPTACLE BRACKET ASSEMBLY (HGU-67/P). Replace receptacle bracket assembly as follows:

Materials Required

Quantity	Description	Reference Number
1	Bracket Assembly, Medium/Large	3151AS123-1 (Note 1)
	-or-	
1	Bracket Assembly, Extra-Large	3151AS124-1 (Note 1)
	-or-	
1	Bracket Assembly, Extra-Large,Wide	3151AS121-1 (Note 1)
As Required	Adhesive, Polychloroprene, Class 3	MIL-A-5540 NIIN 00-515-2246
As Required	Adhesive, RTV 102/732	MIL-A-46106 NIIN 00-877-9872

Notes: 1. Receptacle bracket assemblies are commercially available from:
AMRON International
759 West Fourth Avenue
Escondido, CA 92025-1508
Telephone (760) 746-3834.

1. Remove the outer and inner visors in accordance with paragraph 3-76, to prevent damage during maintenance.

2. Remove the TPL and energy-absorbing liner assemblies in accordance with paragraph 3-94 and set aside.

CAUTION

Avoid pulling on receptacle wires.

3. Detach hook fastener, releasing receptacle cable from battery securing patch on back of helmet.

4. Remove three screws and washers attaching receptacle bracket assembly to receptacle doubler inside helmet assembly. Set receptacle doubler aside.

5. Remove three screws and washers attaching receptacle assembly to receptacle bracket assembly.

6. Remove screw, washer, and clamp securing receptacle cable to receptacle bracket assembly.

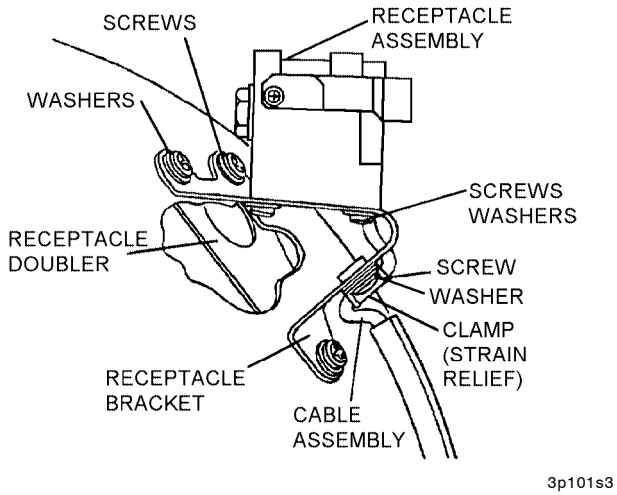

Steps 3 thru 6 - Para 3-101

CAUTION

Do not pull on receptacle wiring.

To avoid damage to gunsight wiring harness assembly, make sure wires are not pinched between receptacle assembly and receptacle bracket assembly as screws are tightened.

Re-use of screws removed is authorized provided the removed screws are reinstalled with RTV adhesive.

7. Attach replacement receptacle bracket to receptacle assembly with three washers and smallest screws. Avoid pinching wires. Cable assembly must exit through slot in receptacle bracket.

8. Loosely attach receptacle cable to receptacle bracket assembly with loop clamp, shorter screw, and washer. This is a strain relief. Make sure cable is inside receptacle and there is no tension on cable between clamp and receptacle. Tighten screw.

9. Position receptacle doubler inside helmet over three holes. Align receptacle bracket on outside of helmet and secure to doubler with 3 washers and longest screws.

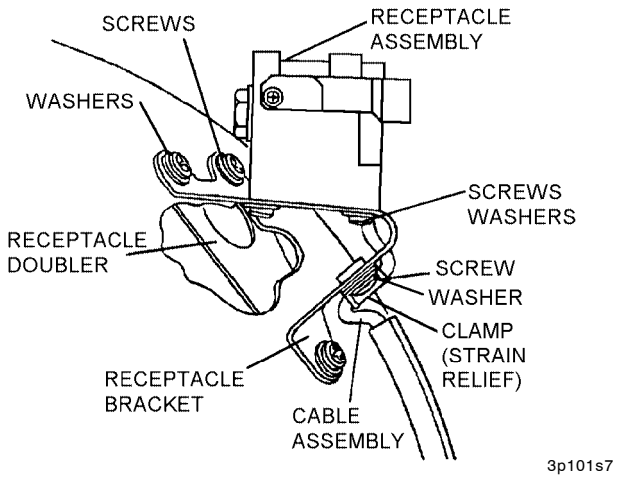

Steps 7 thru 9 - Para 3-101

10. Align receptacle cable with edge of battery securing patch, and fold hook fastener strip over cable.

11. Install the TPL and energy-absorbing liner in accordance with paragraph 3-94.

12. Check helmet fit in accordance with paragraph 3-53.

13. Perform boresighting of HSA in accordance with paragraph 3-57.

14. Install inner and outer visor assemblies in accordance with paragraph 3-76.

15. Document in accordance with OPNAVINST 4790.2 series.

3-102. REPLACEMENT OF HELMET SHELL ASSEMBLY. Replacement of the helmet shell assembly involves removal of all component parts and reassembly of the helmet assembly. Table 3-9 lists the suggested order of disassembly and table 3-10 lists the suggested order of assembly.

Table 3-9. Order of Disassembly for Replacement of Helmet Shell Assembly

Order	Component/Assembly to be Removed	Paragraph
1	Remove Outer and Inner Visor Assemblies	3-76
2	Remove Thermoplastic Liner Assembly	3-77
3	Remove LH and RH Earcup Assemblies	3-79
4	Remove Boom Microphone Assembly	3-84
5	Remove Boom Swivel Assembly	3-85
6	Remove Radio Frequency (Communications) Cable Assembly	3-80
7	Remove Integrated Chin/Nape Assembly	3-93
8	Remove Energy-Absorbing Liner Assembly	3-94
9	Remove CBR Snap Stud	3-96
10	Remove Helmet Block Assembly	3-98
11	Remove NVIIS Wiring Harness Assembly	3-99
12	Remove Gunsight Wiring Harness Assembly (HGU-67/P)	3-100
13	Remove Battery Securing Patch	3-105

Table 3-10. Order of Assembly for Replacement of Helmet Shell Assembly

Order	Component/Assembly to be Installed	Paragraph
1	Installation of Reflective Tape	3-30
2	Installation of Battery Securing Patch	3-31
3	Installation of Strobe Light Securing Patch	3-32
4	Wiring of Helmet Block Assembly	3-34
5	Installation of NVIIS Wiring Harness Assembly	3-35
6	Installation of Gunsight Wiring Harness Assembly (HGU-67/P only)	3-36
7	Installation of Energy-Absorbing Liner Assembly	3-38
8	Installation of Radio Frequency (Communications) Cable Assembly	3-40
9	Installation of Earphones	3-47
10	Installation of Boom Swivel Assembly	3-85
11	Installation of Boom Microphone Assembly	3-41
12	Installation and Fitting of Thermoplastic Liner Assembly	3-52
13	Installation of Visor Assemblies and Visor Cover Assembly	3-48

3-103. REPAIR OF HELMET SHELL ASSEMBLY. Repair of the helmet shell assembly is intended for, but not limited to, patching of holes resulting from removal of superceded CBR assemblies, repositioning of oxygen mask receivers and internal communications cable replacements. Repair the helmet shell assembly as follows:

Materials Required

Quantity	Description	Reference Number
As Required	Tape, Pressure Sensitive, Adhesive	NIIN 00-283-0612
As Required	Adhesive, Epoxy, Two-Part	NIIN 00-738-6429 or equivalent
As Required	Sandpaper, Fine	Commercial

1. Remove the outer and inner visors in accordance with paragraph 3-76 to prevent damage during maintenance.

2. Remove earcup assemblies from pile fastener inside helmet assembly and position clear of work area.

3. Detach pile fastener material from inside helmet assembly and fold clear of work area.

4. Remove receiver assemblies.

5. Prepare helmet exterior by removing reflective tape from area surrounding holes to be filled. Sand this area lightly.

6. On helmet interior, firmly apply masking tape over hole(s) to be filled.

7. On a clean, dry, flat surface, thoroughly mix equal amounts of Epoxy Part A (Resin) and Part B (Hardener), ensuring that Parts A and B blend into a smooth, uniform color.

8. Using a putty knife or tongue depressor, fill holes completely with epoxy mixture. Overfilling the holes slightly will compensate for settling as the mixture dries.

9. Allow mixture to dry for approximately four hours.

10. Sand away excess mixture from the helmet shell surface.

11. Remove masking tape from helmet interior.

12. Install reflective tape in accordance with paragraph 3-30.

13. Install the inner and outer visors in accordance with paragraph 3-76.

14. Document in accordance with OPNAVINST 4790.2 Series.

3-103A. REPAIR OF EDGEROLL. To repair small (under 3-inch total length) tears, splits and rips to the edgeroll leather, proceed as follows:

Materials Required

Quantity	Description	Reference Number
As Required	Moleskin, Adhesive	NIIN 01-456-2000
As Required	Thread, Nylon, Size “E”	V-T-295 NIIN 00-244-0609

NOTE

Tears, splits and rips, larger than the 3-inch limit shall be evaluated by the technician for determination of reparability. If leather is too brittle or otherwise deteriorated for repair procedures to be effective, replace the helmet shell.

1. Using size “E” nylon thread single, whip stitch or baseball stitch the raw edges of the torn, split or ripped edgeroll leather together. Secure stitching ends with a surgeon’s knot followed by a square knot.

2. Using pinking shears, cut a patch from the Moleskin material large enough to cover the damaged edgeroll area plus a 1/4-inch clearance.

3. Darken the upper surface of the Moleskin material with a black magic marker or equivalent to match the color of the edgeroll and allow to dry.

4. Remove covering over adhesive on Moleskin material and firmly press into position over the repaired area of the edgeroll.

5. Document repair procedures in accordance with OPNAVINST 4790.2 Series.

3-104. REPLACEMENT OF STROBE LIGHT SECURING PATCH. Replace strobe light securing patch on helmet assembly as follows:

Materials Required

Quantity	Description	Reference Number
As Required	Sandpaper, Fine	Commercial
As Required	Detergent, Mild	Commercial
As Required	Cloth, Lint-Free	MIL-C-85043 NIIN 00-165-7195
2 Inches	Tape, Pile, Type I, 2-Inch Width	MIL-F-21840 NIIN 00-296-4930
As Required	Adhesive, Polychloroprene, Class 3	MIL-A-5540 NIIN 00-515-2246

CAUTION

Do not damage reflective tape covering helmet shell when removing strobe light securing patch or when sanding to remove adhesive.

NOTE

Use of any size or type of pile tape available through local supply is authorized. Black and olive green are the preferred colors.

1. Work a beveled (not sharp) short putty knife under the strobe light securing patch, stripping the patch from the helmet.

2. Clean helmet surface intended for strobe light securing patch with fine sandpaper.

3. Remove sanding residue with a mild solution of detergent and water, rinsing thoroughly.

4. Wipe dry with a clean, lint-free cloth. Allow surface to air dry thoroughly.

5. Position a piece of 2-inch x 2-inch pile fastener tape on the crown of the helmet at a point 1/4 inch to the right of the lens pad and 1 inch from the aft end of the lens pad. Hold in place and trace around the tape with a lead pencil.

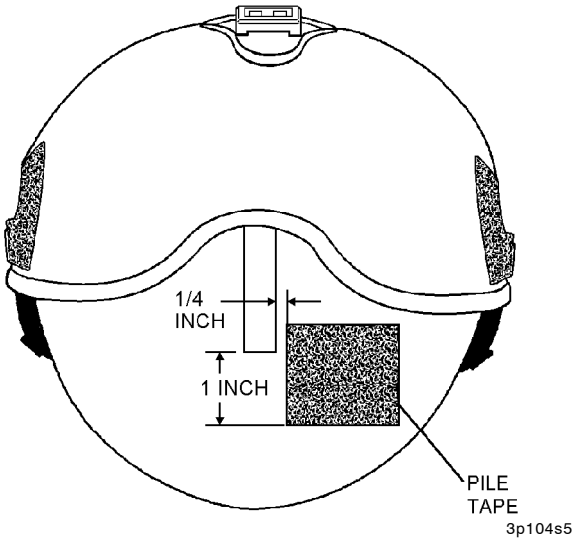

Step 5 - Para 3-104

6. Apply adhesive to the outlined area, and allow adhesive to dry approximately 30 minutes.

7. Apply adhesive to the underside of the pile fastener tape and apply a second coat to the outlined area on the helmet. Allow adhesive to become tacky (approximately 15 minutes).

8. Align pile fastener tape with outlined area and press firmly onto helmet shell assembly.

9. Document in accordance with OPNAVINST 4790.2 Series.

3-105. REPLACEMENT OF BATTERY COMPARTMENT SECURING PATCH. Replace battery compartment securing patch on the helmet assembly as follows:

Materials Required

Quantity	Description	Reference Number
1	Battery Compartment Securing Patch, Medium, Large, Extra-Large	(Note 1)
As Required	Detergent, Mild	Commercial
As Required	Cloth, Lint-Free	MIL-C-85043 NIIN 00-165-7195
As Required	Sandpaper, Fine	Commercial
As Required	Adhesive, Polychloroprene, Class 3	MIL-A-5540 NIIN 00-515-2246

Notes: 1. Fabricate battery compartment securing patch in accordance with paragraph 3-107 or 3-108.

CAUTION

Do not damage reflective tape covering helmet shell when removing battery securing patch or when sanding to remove adhesive.

1. Work a beveled (not sharp) short putty knife under the battery securing patch, stripping the patch from the helmet.

2. Clean helmet surface intended for battery securing patch with a fine sandpaper.

3. Remove sanding residue with a mild solution of detergent and water, rinsing thoroughly.

4. Wipe dry with a clean, lint-free cloth. Allow surface to air dry thoroughly.

5. Determine the proper vertical location of the battery securing patch from the edgeroll according to patch size:

Medium Helmet = 1/2 inch from edgeroll
Large Helmet = 3/4 inch from edgeroll
Extra-Large Helmet = 1 inch from edgeroll

6. Position a replacement battery securing patch on the centerline of helmet at nape edgeroll. Offset the patch from nape edgeroll based on helmet size. Hold in place and trace around the large rectangular portion of the patch with a lead pencil. Do not trace around the velcro hook flap.

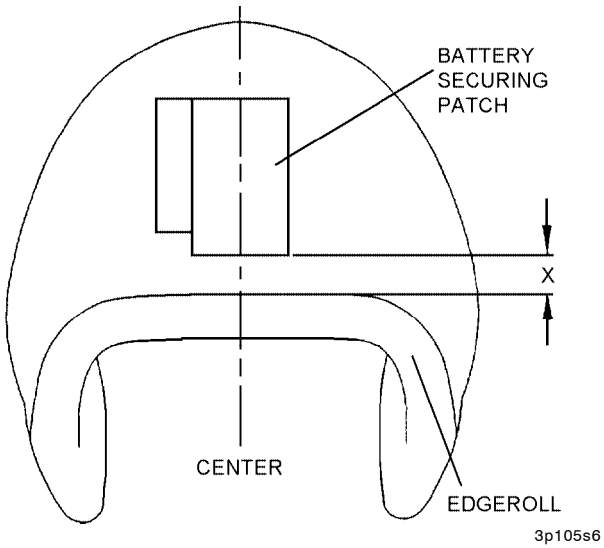

Step 6 - Para 3-105

7. Apply adhesive to the outlined area, and allow adhesive to dry approximately 30 minutes.

8. Apply adhesive to the underside of the battery securing patch and apply a second coat to the outlined area on the helmet. Allow adhesive to become tacky (approximately 15 minutes).

NOTE

Ensure that hook strip is on the LH side when installing battery securing patch.

9. Align battery securing patch with outlined area and press firmly onto helmet shell assembly.

10. Document in accordance with OPNAVINST 4790.2 Series.

3-106. STORAGE OF EQUIPMENT.

1. Store the quick don mount assembly with the helmet assembly, but not attached to the helmet block.

2. Store the NVIIS, which includes the goggles and battery pack, in the NVIIS case. Note that the NVIIS case is not issued with the helmet assembly; it is a separate issue item.

3-107. FABRICATION OF MEDIUM/LARGE BATTERY SECURING PATCH. Construct a medium/large battery securing patch for a medium or large helmet assembly, in accordance with figure 3-13.

3-108. FABRICATION OF EXTRA-LARGE AND EXTRA-LARGE WIDE BATTERY SECURING PATCH. Construct an extra-large or extra-large wide battery securing patch for an extra-large or extra-large wide helmet assembly in accordance with figure 3-14.

3-109. REPLACEMENT OF REFLECTIVE TAPE. Remove and replace reflective tape as follows:

Materials Required

Quantity	Description	Reference Number
As Required	Denatured Alcohol	TT-I-734A NIIN 01-136-7012

1. Using care not to damage helmet surface, work a beveled (not sharp) short putty knife under the reflective tape and strip the sheeting from the adhesive.

2. Remove adhesive using cloth dampened with alcohol.

3. Install new reflective tape in accordance with paragraph 3-30.

4. Document in accordance with OPNAVINST 4790.2 Series.

3-110. FABRICATION OF REMOVABLE CAMOUFLAGE COVER. Fabricate removable camouflage cover templates, using suitably durable material and patterns provided in figures 3-15 through 3-18 and figures 3-19, Lens Pad/Helmet Mounting Block Template, and 3-20, Battery Securing Patch Template, as follows:

Materials Required

Quantity	Description	Reference Number
As Required	Cloth, Aramid, Fire Resistant, Sage Green (Note 1)	MIL-C-83429 NIIN 01-147-2064
As Required	Cloth, Camouflage, Desert (Note 1)	NIIN TBD
As Required	Cloth, Camouflage, Woodland (Note 1)	NIIN 01-167-8403
As Required	Fastener Tape, Hook, 1-Inch	MIL-F-21840 NIIN 00-106-5973
As Required	Fastener Tape, Pile, 1-Inch	MIL-F-21840 NIIN 00-106-5974
As Required	Fastener Tape, Hook, 2-Inch	MIL-F-21840 NIIN 00-926-4931
As Required	Fastener Tape, Pile, 2-Inch	MIL-F-21840 NIIN 00-926-4930
As Required	Thread, Nylon, High Temperature Resistant Polyamide	MIL-T-83193 NIIN 00-130-6245
As Required	Adhesive, Polychloroprene, Class 3	MIL-A-5540 NIIN 00-515-2246

Notes: 1. Use of any camouflage material readily available is authorized for removable cover fabrication.

NOTE

Ensure correct pattern size has been selected for helmet being covered.

All machine stitching shall conform to ASTM-D-6193, Type 301 Lockstitch. Stitches shall be set at 8 to 10 stitches per inch with a minimum backstitch of one inch.

1. Lay out fabric and trace template outline onto material. Transfer all markings for placement of hook fastener tape from template to fabric. Cut fabric.

2. Assemble left and right cover center panel sections by machine stitching forming a 3/8-inch seam from the forward edge of the cover to the rear edge.

3. Reverse fabric and top stitch the seam 1/4-inch from folded edge.

4. Using top stitching as a centerline for template placement, trace outline of lens pad/helmet mounting block cut-out template (figure 3-19) onto forward portion of assembled center section.

5. At the rear of the center section, using top stitching as a centerline for template placement, trace outline of battery securing patch cut-out template (figure 3-20).

6. At the area where the lens pad/helmet mounting block cut-out was traced, cut material and fold excess fabric under, and stitch 1/4-inch from the edge around the entire slot forming a neat clean edge. Repeat for the area where the battery securing patch cut-out was traced.

7. Using a 3/8-inch seam, sew together the darts marked AA and BB on the right and left side panels of the helmet cover. Top stitch the outer surface of the side panels over the 3/8-inch seam sewing 1/4 inch from the folded edge of the side panel darts.

8. Attach right and left side panels to the helmet cover center section using a 3/8-inch seam. Top stitch 1/4 inch from the folded edge of the seam on the outer fabric surface of each panel.

9. For HGU-67/P helmets only, perform the following steps for receptacle assembly cut-out:

a. Position helmet upright on work surface with rear of helmet facing technician, remove receptacle and receptacle bracket from rear of helmet shell by removing three screws and flat washers attaching receptacle and receptacle bracket to receptacle doubler on helmet shell interior. Remove receptacle cable from hook fastener strip on battery securing patch, and place gently on work surface.

b. Fabricate a receptacle cut-out template (3 inch x 3 inch square) from suitably durable material.

c. Place assembled cover, right side out, evenly over helmet shell exterior. Mark location of upper and lower receptacle bracket attaching points on cover exterior. With cover held securely in place, mark the upper and lower edges of the battery securing patch on cover exterior.

d. Reverse assembled cover and place evenly over helmet shell exterior. Hold firmly in place and mark upper and lower edges of battery securing patch on cover interior surface.

e. Using three screws and washers removed in step a above, reinstall receptacle and bracket to helmet shell exterior by securing them to the receptacle doubler located on the helmet shell interior. Secure receptacle cable to hook fastener strip on battery securing patch. Set helmet aside for later installation of helmet cover.

f. At marked location on helmet cover interior surface, center a 2-inch x 4-inch length of hook fastener tape vertically between marks and sew around entire patch 1/4 inch from the edge.

g. Reverse helmet cover. At location marked with the upper and lower receptacle bracket positions in step c above, center the receptacle cut-out template between the marks and trace outline onto helmet cover exterior surface. Cut material, fold under excess fabric, and stitch 1/4 inch from edge around entire cut-out forming a neat clean edge.

h. At location marked for battery securing patch attachment on cover exterior, center a 2-inch x 4-inch length of pile fastener tape between marks and sew in position stitching 1/4 inch from edge around entire patch.

10. Attach 1-inch square hook fastener tape to interior surface of helmet cover as indicated on pattern.

11. Fold under a 3/8-inch hem and stitch 1/4 inch from edge of hem around entire helmet cover.

11A. On exterior of completed cover, sew a strobe light securing patch into place using dimensions from paragraph 3-32 as a guideline for positioning patch.

12. Following procedures established in paragraph 3-32, install 1-inch square pile fastener tape onto helmet shell exterior surface in locations corresponding to hook fastener locations on helmet cover.

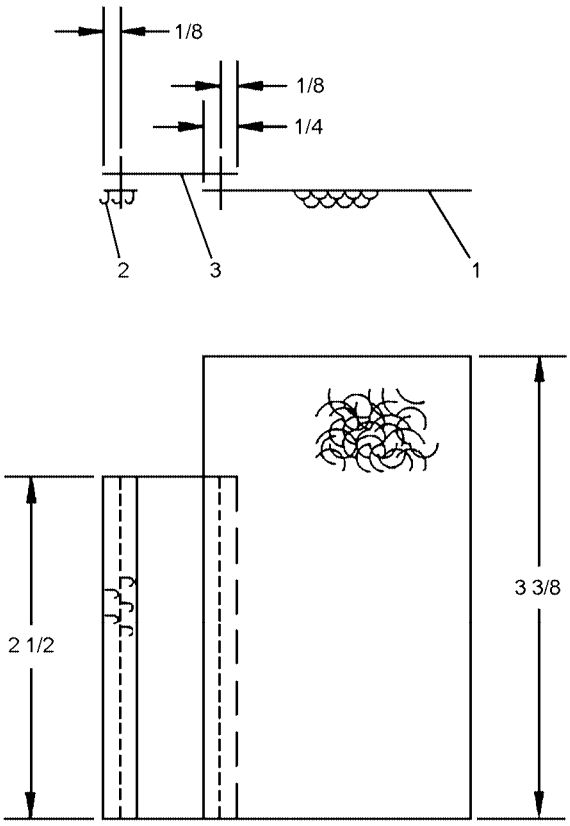

List of Materials

No.	Description	Material	Specification
1	Pile Tape, 2 x 3-3/8 In.	Tape, Pile, Black	MIL-F-21840, Type I, Class I
2	Hook Tape, 1/4 x 2-1/2 In.	Tape, Hook, Black	MIL-F-21840, Type I, Class I
3	Binding Tape, 1 x 2-1/2 In.	Tape, Binding, Black	MIL-T-5038, Type III, Class 2
4	Thread, Size F	Thread, Black	V-T-295, Type II, Class A
Note: Sear edges of material; do not form sharp edges. Backstitch not less than 3/4 inch.			

Figure 3-13. Fabrication of Medium/Large Battery Securing Patch (3151AS112-2)

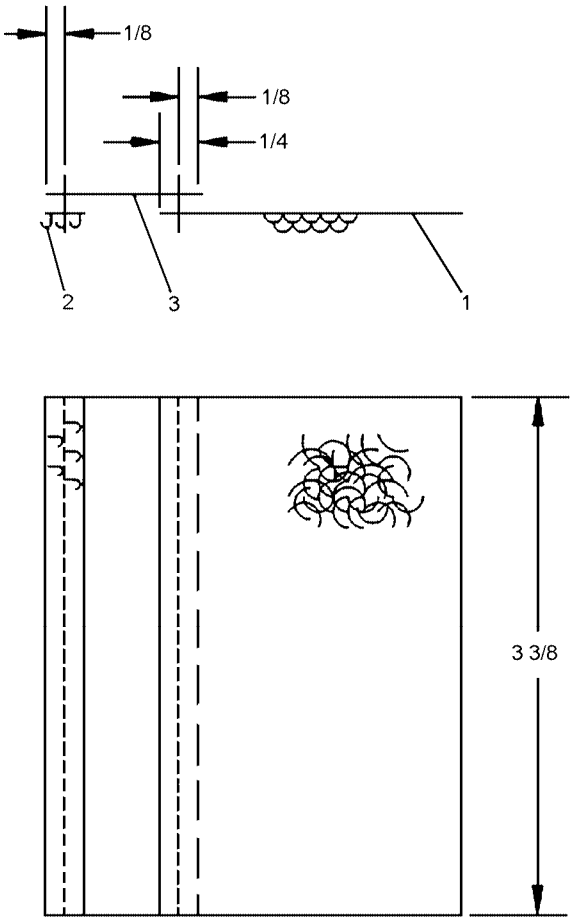

3-14

List of Materials

No.	Description	Material	Specification
1	Pile Tape, 2 x 3-3/8 In.	Tape, Pile, Black	MIL-F-21840, Type I, Class I
2	Hook Tape, 1/4 x 3-3/8 In.	Tape, Hook, Black	MIL-F-21840, Type I, Class I
3	Binding Tape, 1 x 3-3/8 In.	Tape, Binding, Black	MIL-T-5038, Type III, Class 2
4	Thread, Size F	Thread, Black	V-T-295, Type II, Class A
Note: Sear edges of material; do not form sharp edges. Backstitch not less than 3/4 inch.			

Figure 3-14. Fabrication of Extra-Large and Extra-Large Wide Battery Securing Patch (3151AS112-1)

THIS PAGE INTENTIONALLY LEFT BLANK.

NOTE: Procedures for the construction of the pattern.

1. Print out all segments of pattern.
2. Trim all printed segments of pattern at dashed trim line ensuring the alignment marks (crosses) remain on the pattern.
3. Align crosses with adjacent pattern segments and tape in place.
4. After taping, cut out pattern.

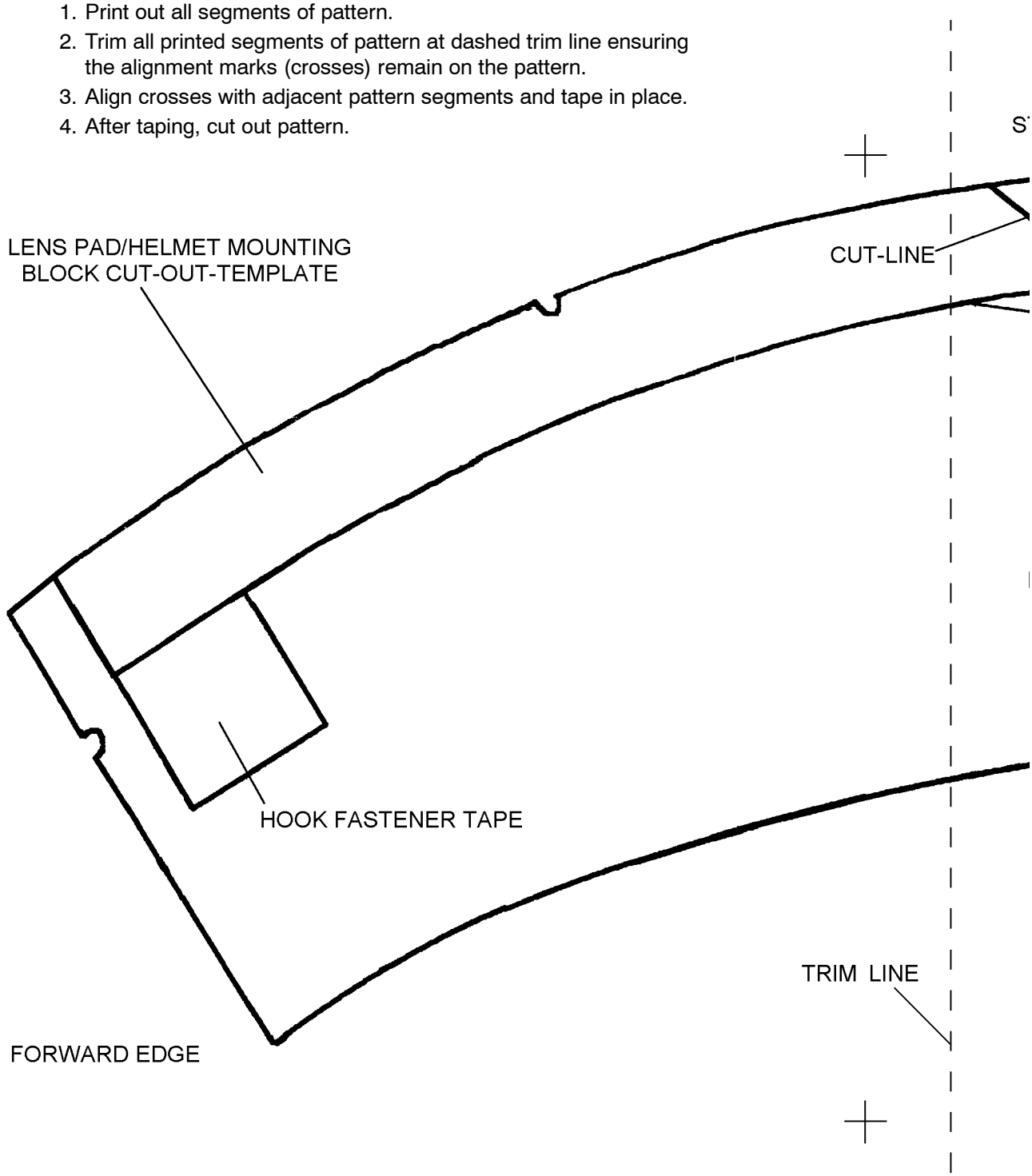

This figure has been divided into multiple segments to facilitate the printing of the pattern.

3-15-1

Figure 3-15. Removable Camouflage Helmet Cover (Medium) (1 of 5)

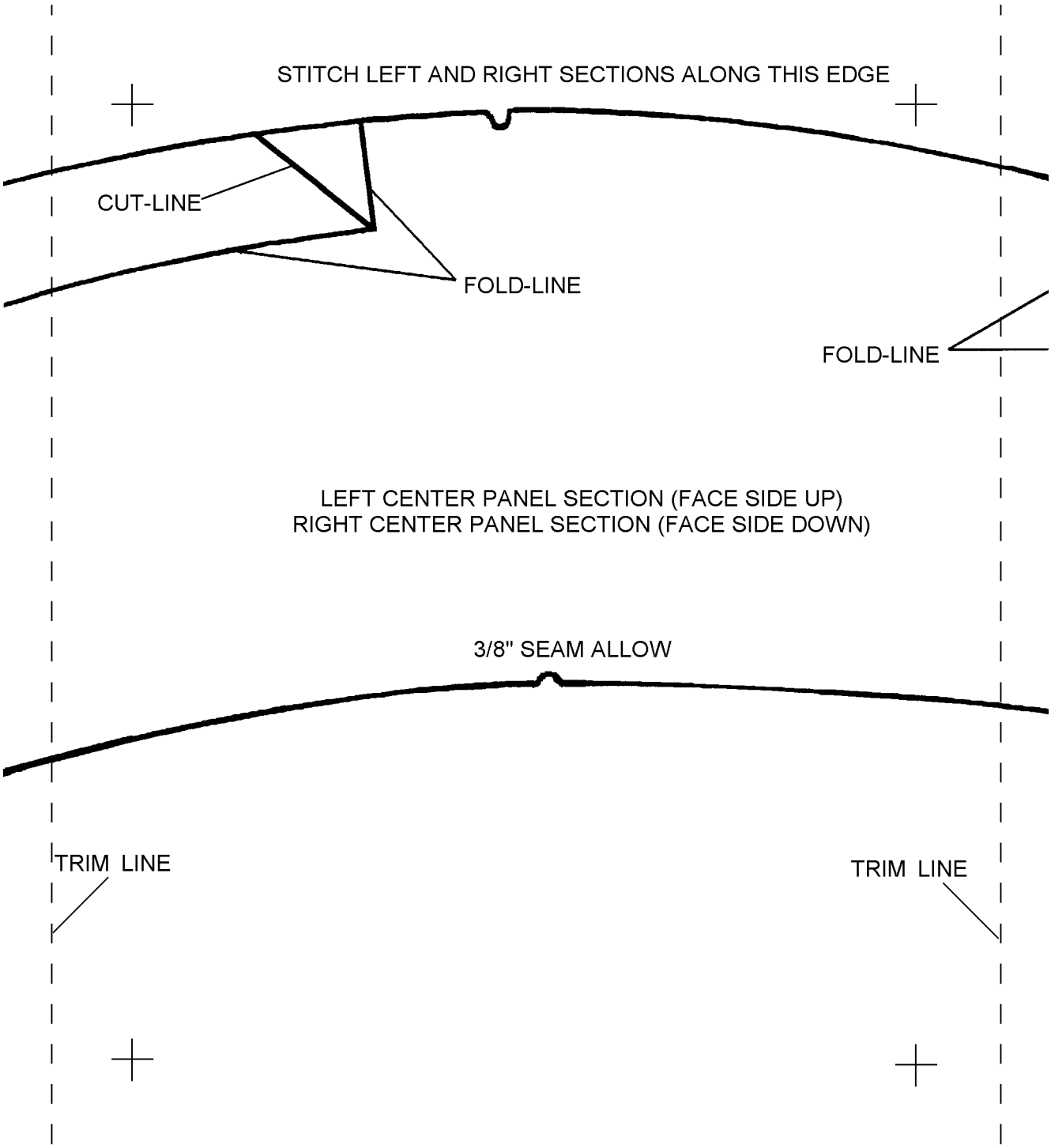

3-15-2

Figure 3-15. Removable Camouflage Helmet Cover (Medium) (2 of 5)

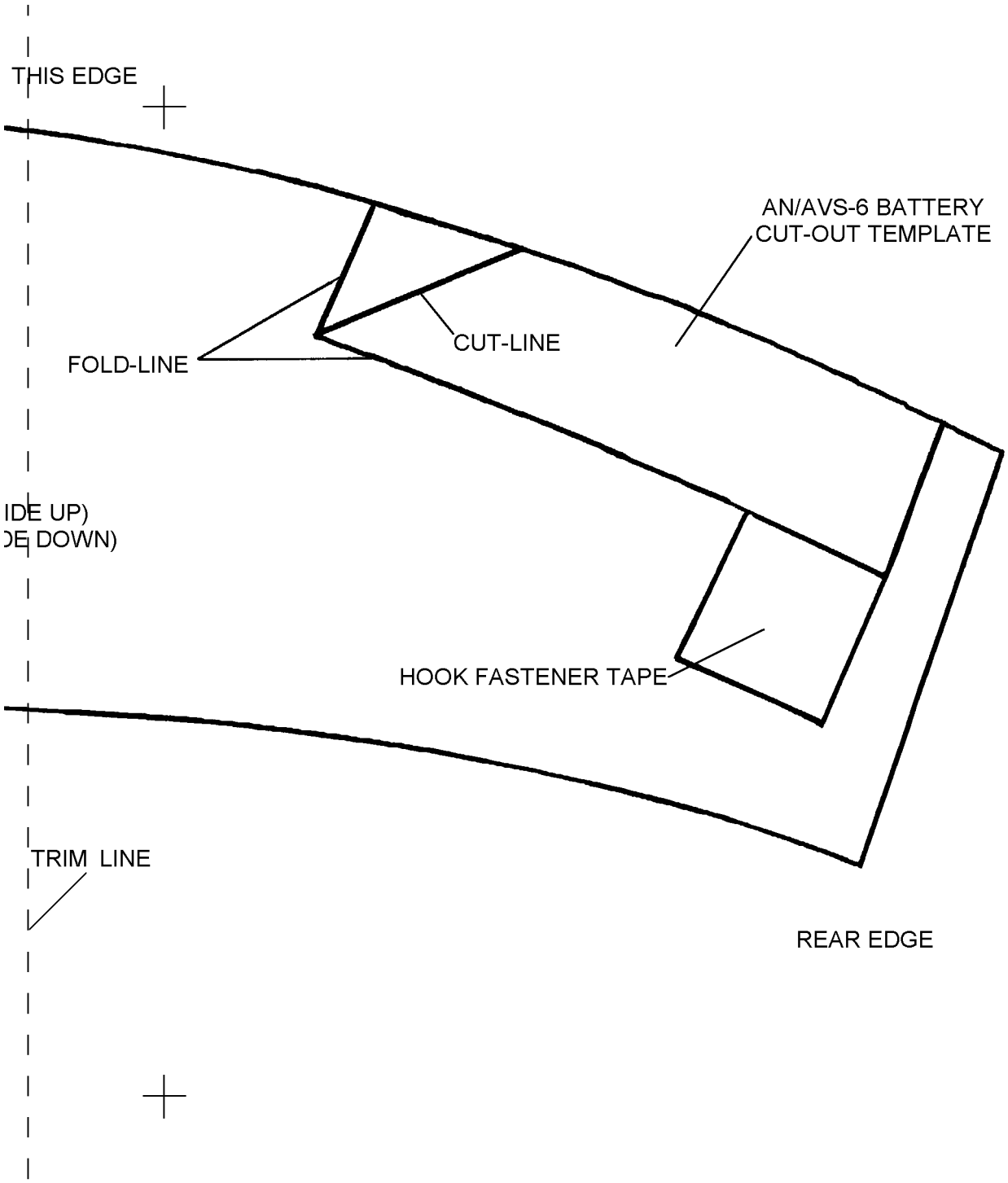

3-15-3

Figure 3-15. Removable Camouflage Helmet Cover (Medium) (3 of 5)

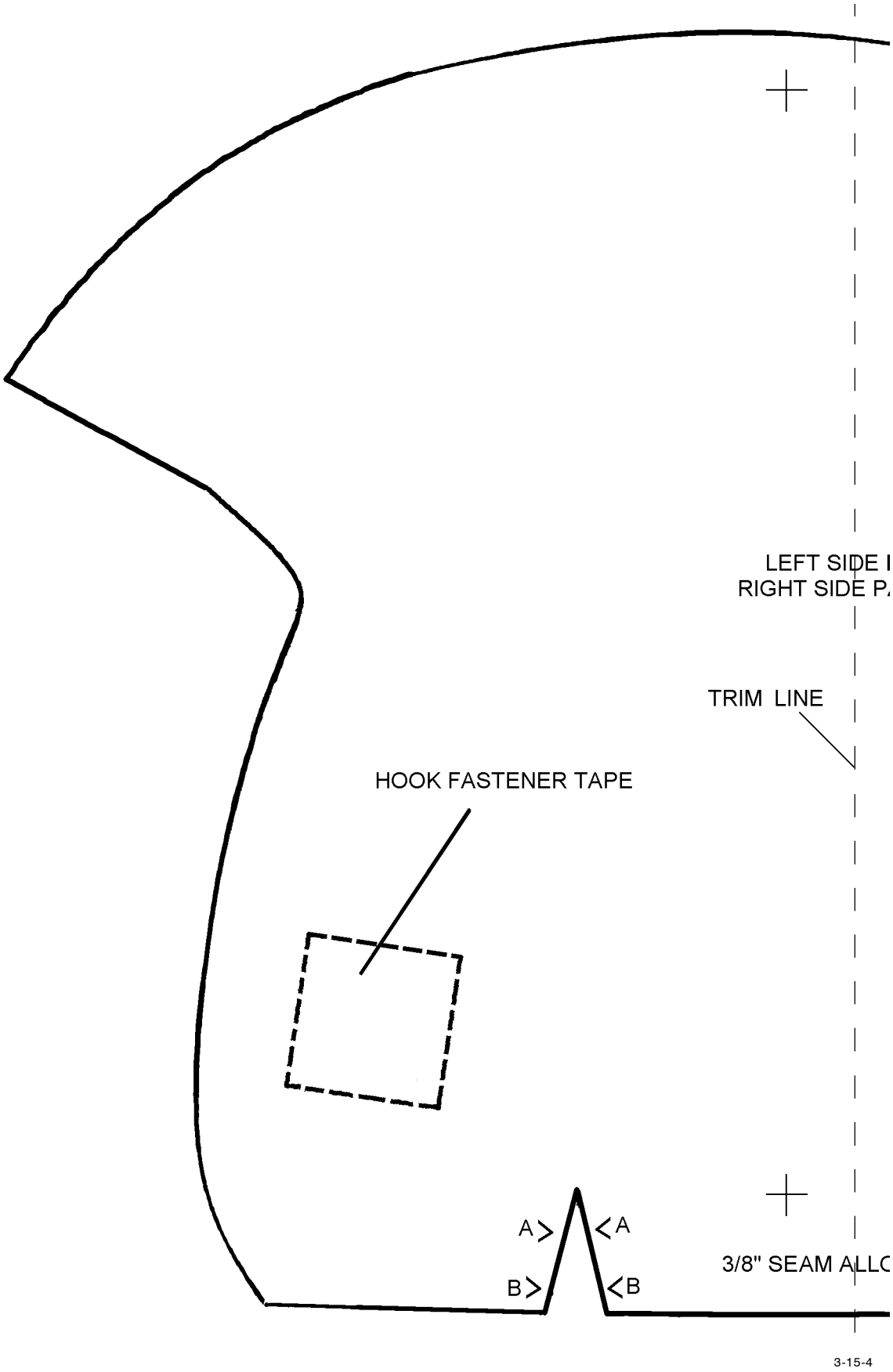

Figure 3-15. Removable Camouflage Helmet Cover (Medium) (4 of 5)

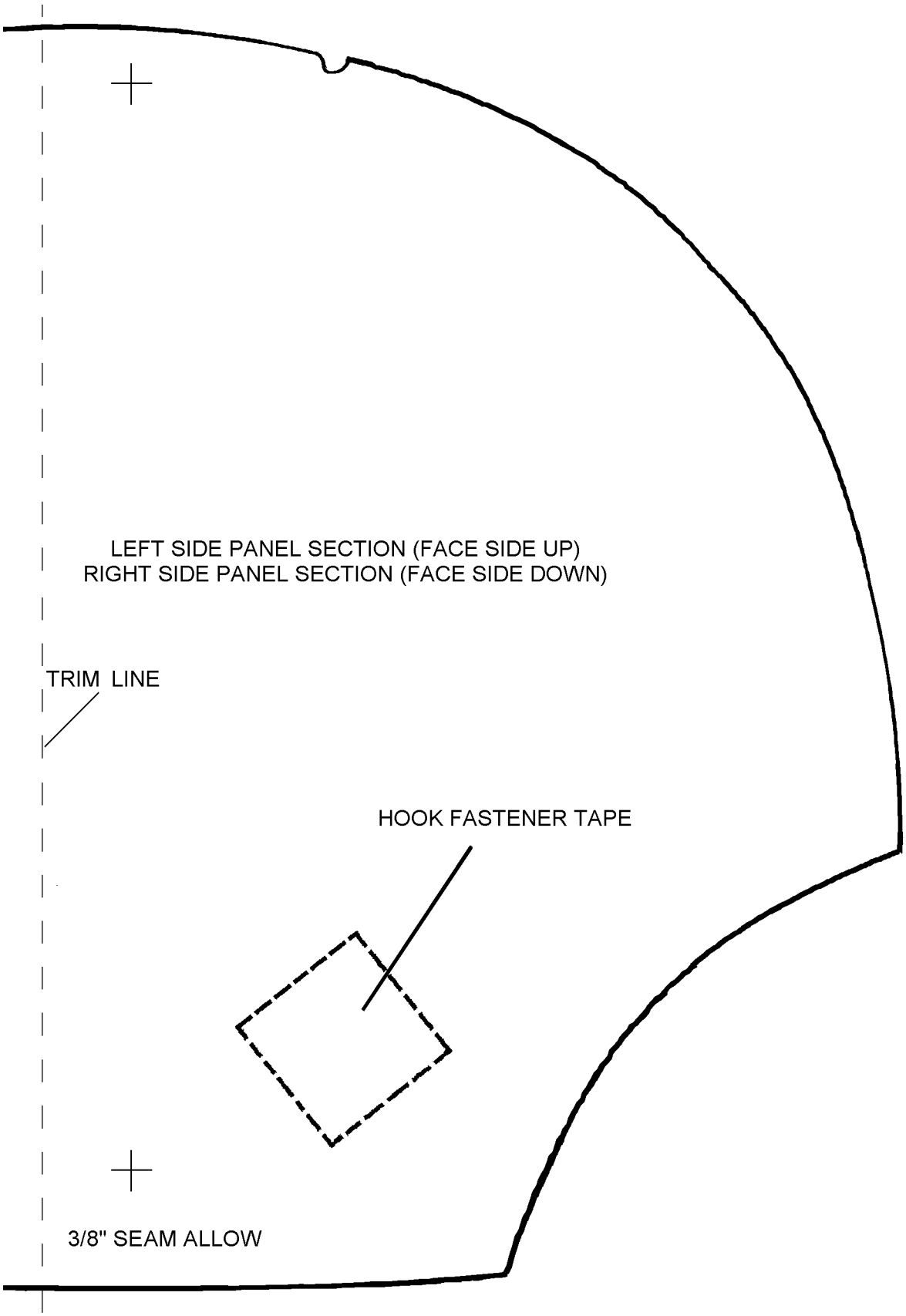

3-15-5

Figure 3-15. Removable Camouflage Helmet Cover (Medium) (5 of 5)

THIS PAGE INTENTIONALLY LEFT BLANK.

NOTE: Procedures for the construction of the pattern.

1. Print out all segments of pattern.
2. Trim all printed segments of pattern at dashed trim line ensuring the alignment marks (crosses) remain on the pattern.
3. Align crosses with adjacent pattern segments and tape in place.
4. After taping, cut out pattern.

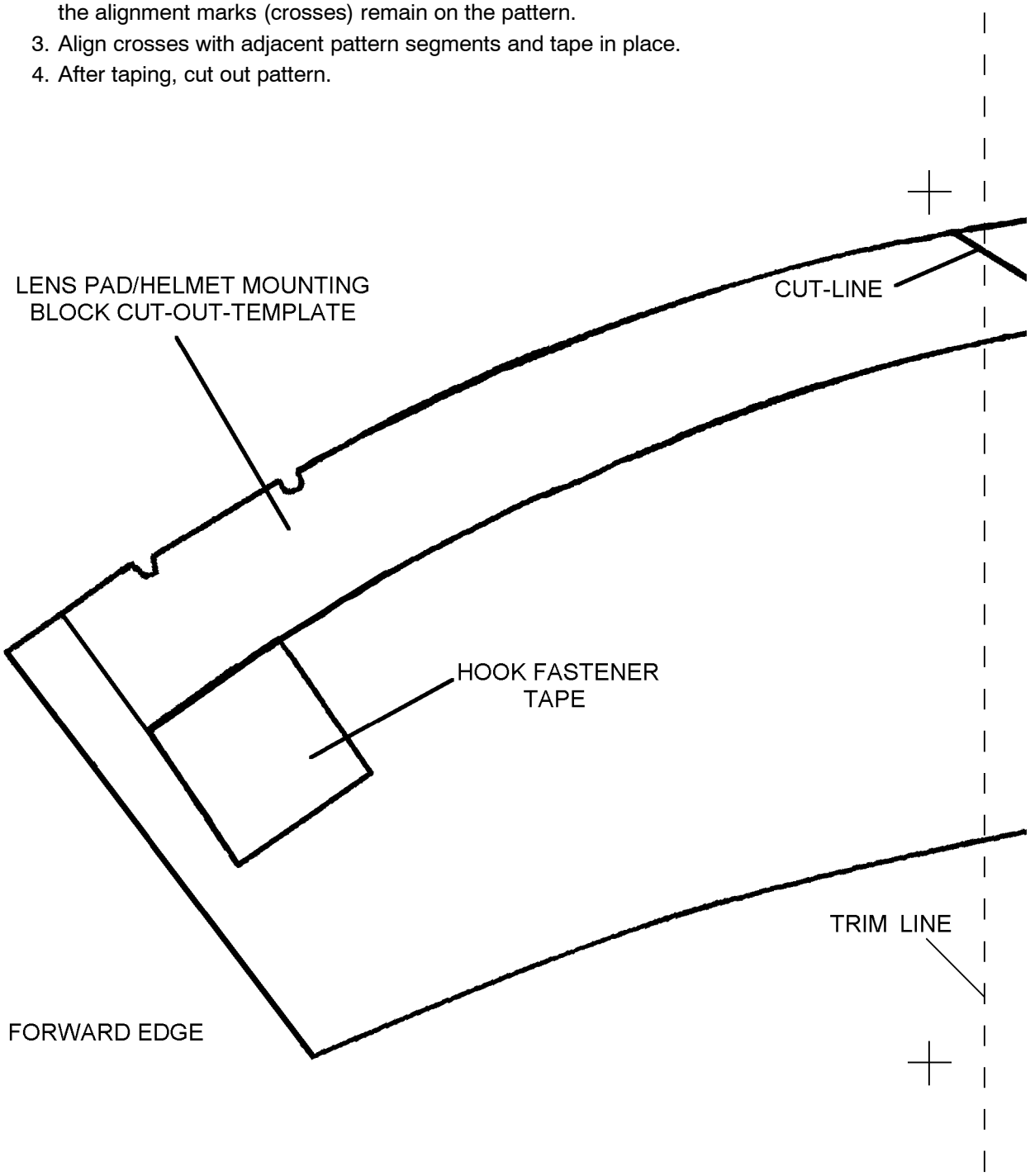

This figure has been divided into multiple segments to facilitate the printing of the pattern.

3-16-1

Figure 3-16. Removable Camouflage Helmet Cover (Large) (1 of 5)

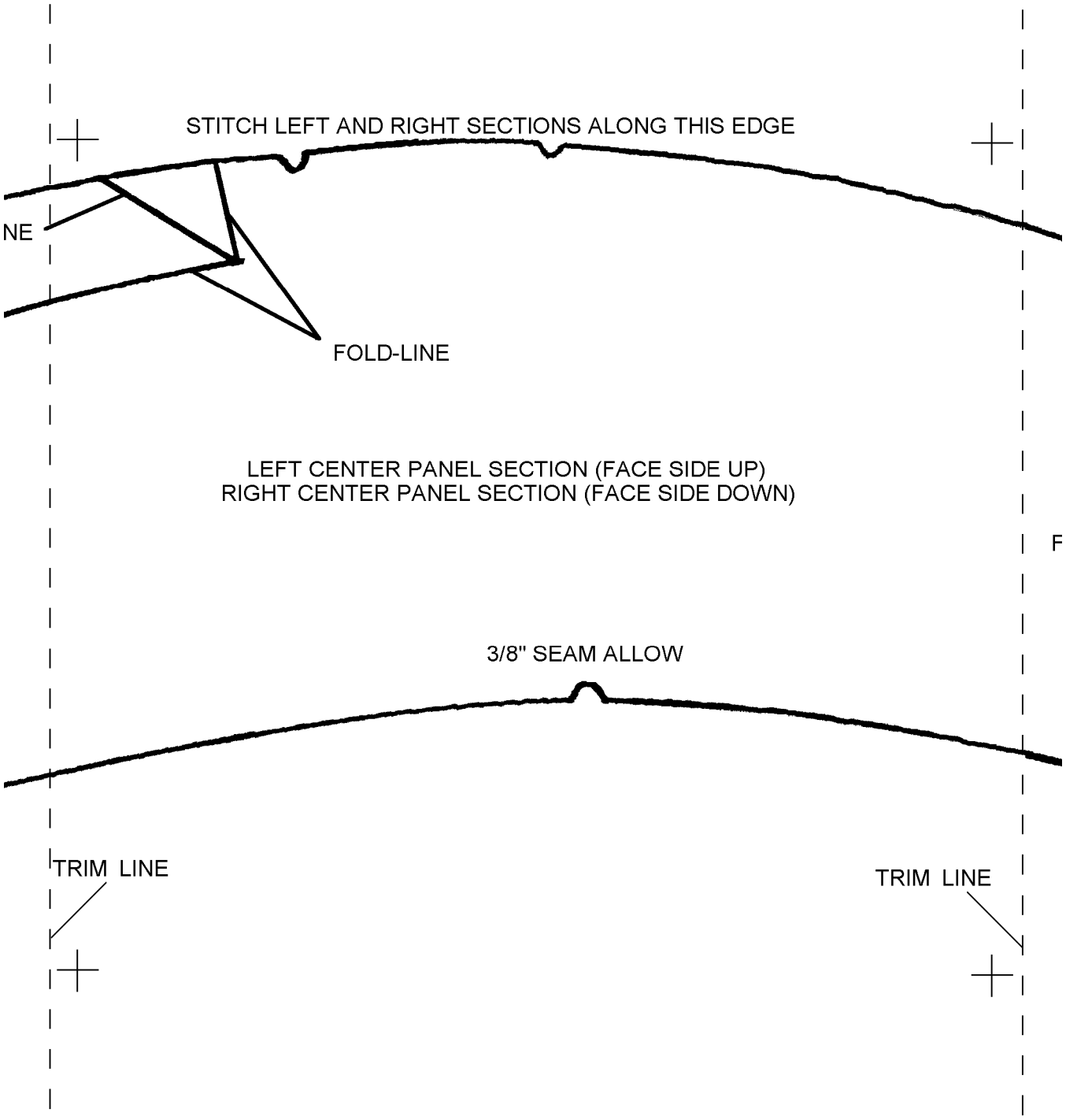

3-16-2

Figure 3-16. Removable Camouflage Helmet Cover (Large) (2 of 5)

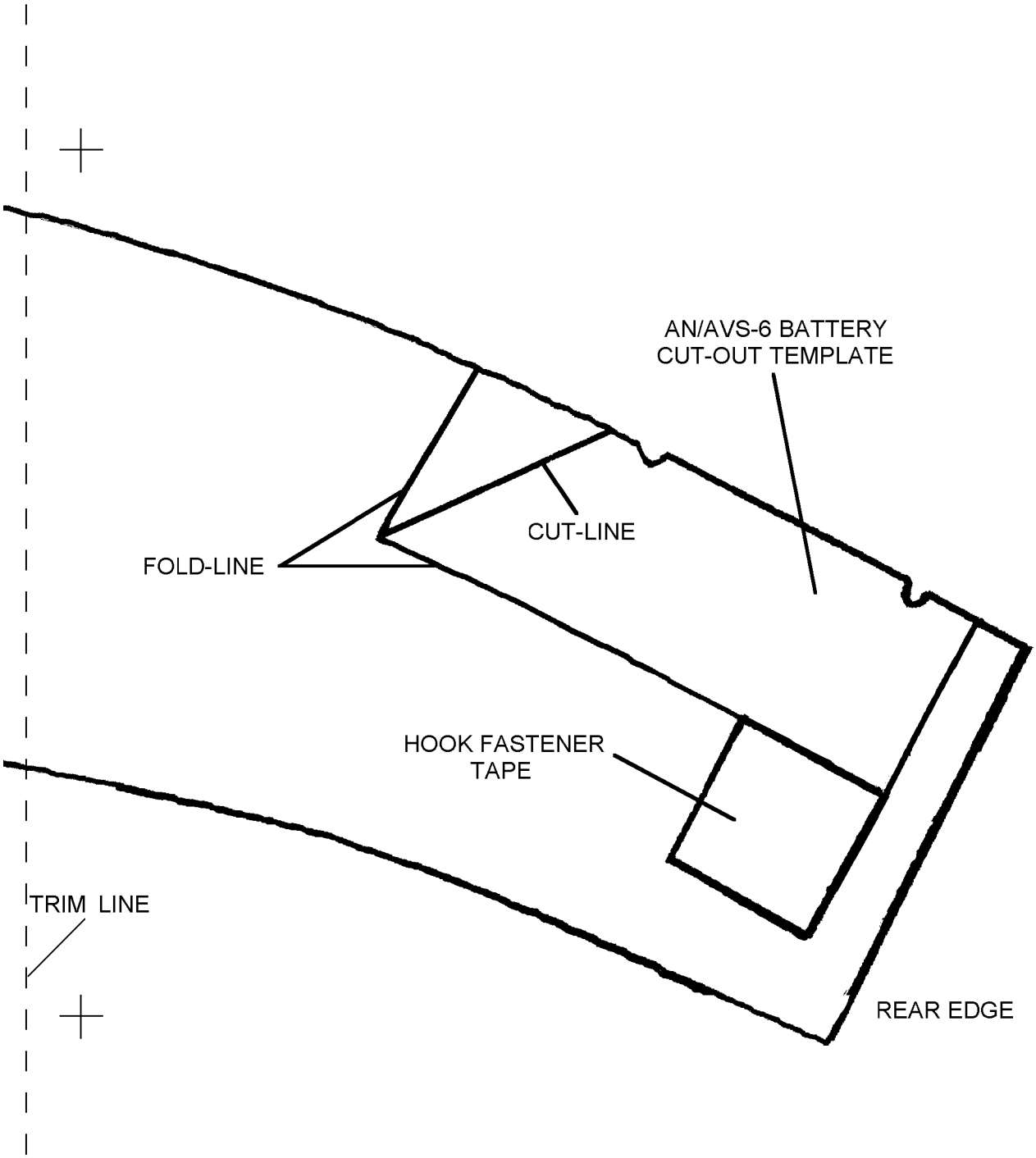

3-16-3

Figure 3-16. Removable Camouflage Helmet Cover (Large) (3 of 5)

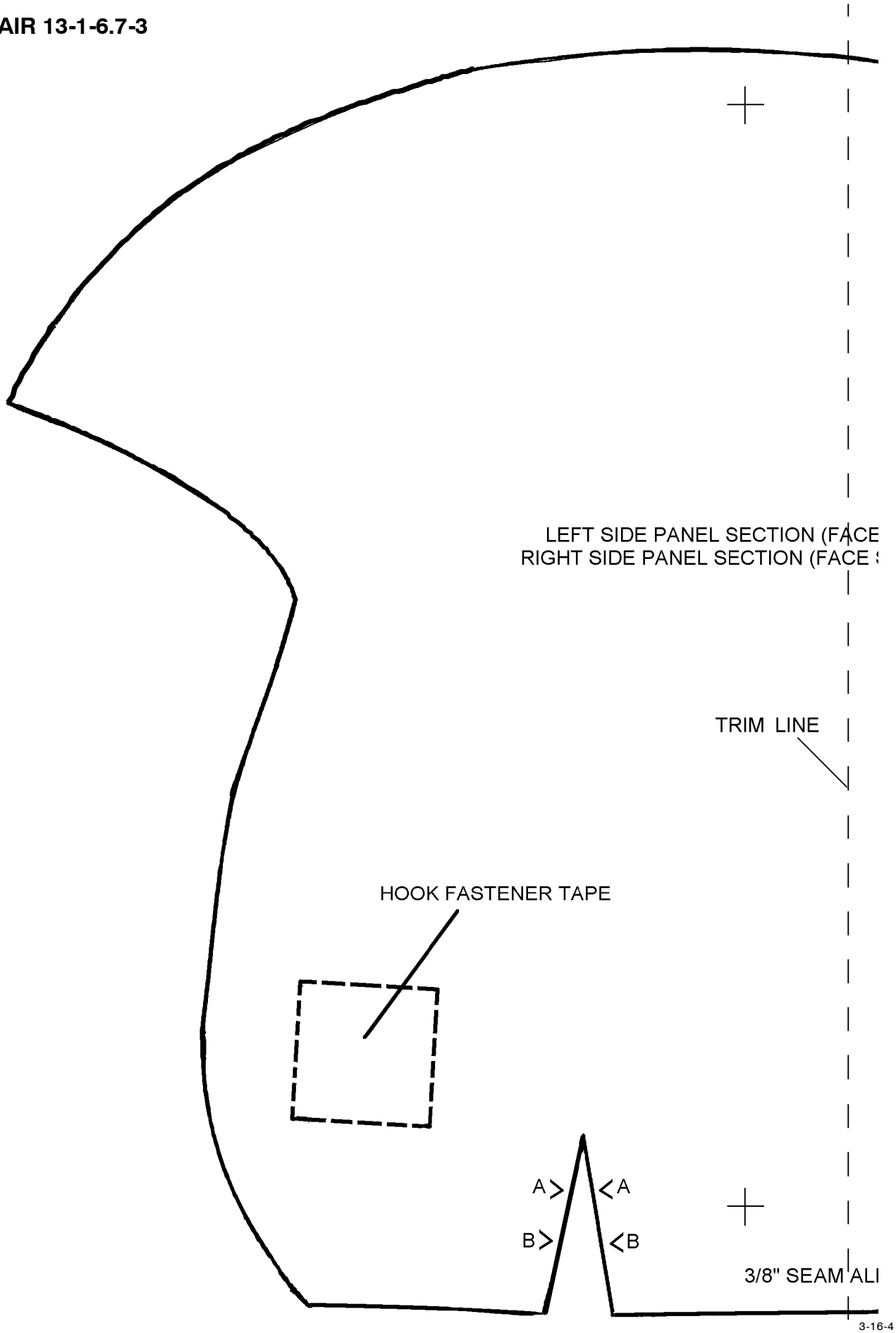

Figure 3-16. Removable Camouflage Helmet Cover (Large) (4 of 5)

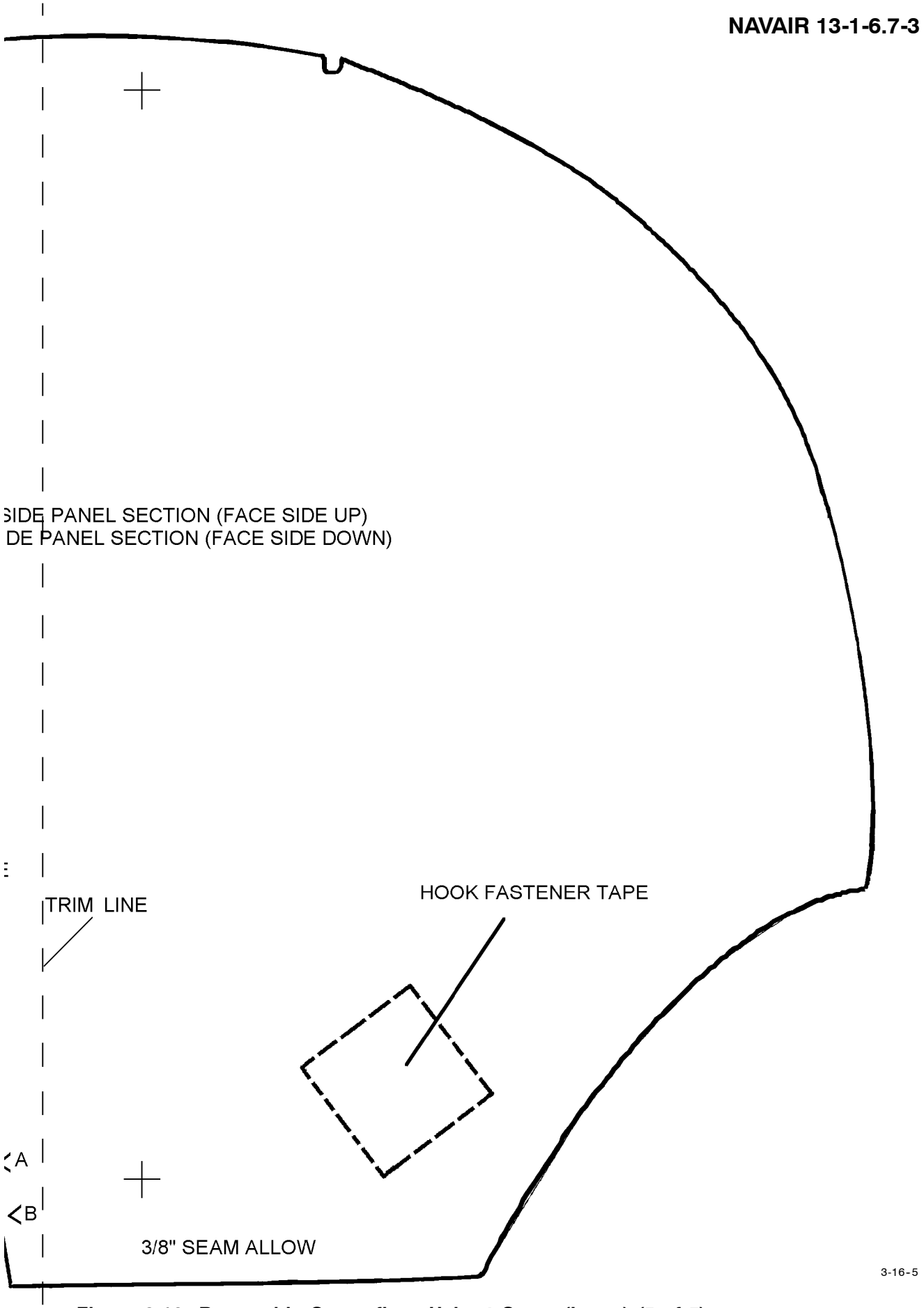

Figure 3-16. Removable Camouflage Helmet Cover (Large) (5 of 5)

THIS PAGE INTENTIONALLY LEFT BLANK.

NOTE: Procedures for the construction of the pattern.

1. Print out all segments of pattern.
2. Trim all printed segments of pattern at dashed trim line ensuring the alignment marks (crosses) remain on the pattern.
3. Align crosses with adjacent pattern segments and tape in place.
4. After taping, cut out pattern.

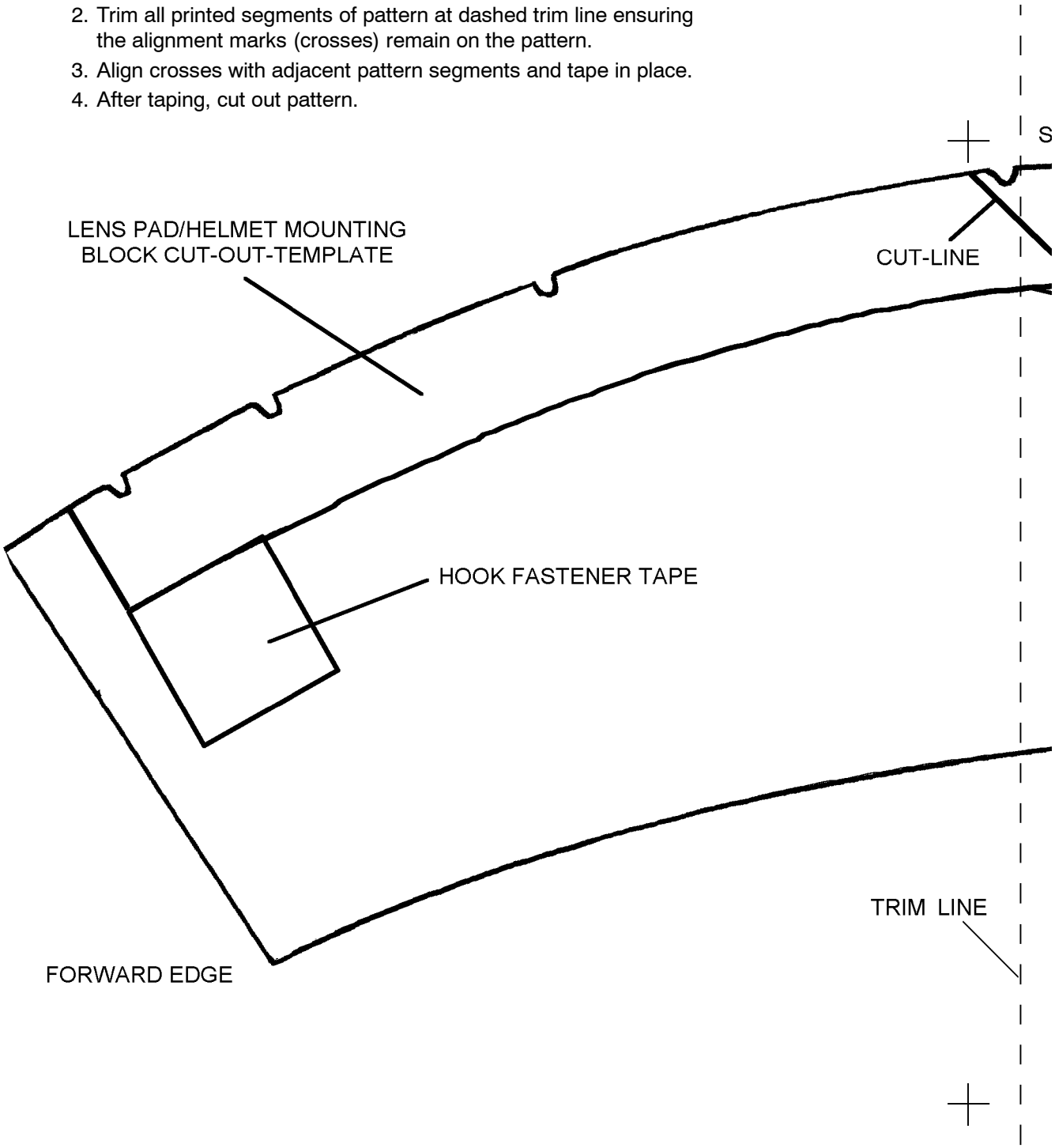

This figure has been divided into multiple segments to facilitate the printing of the pattern.

3-17-1

Figure 3-17. Removable Camouflage Helmet Cover (Extra-Large) (1 of 5)

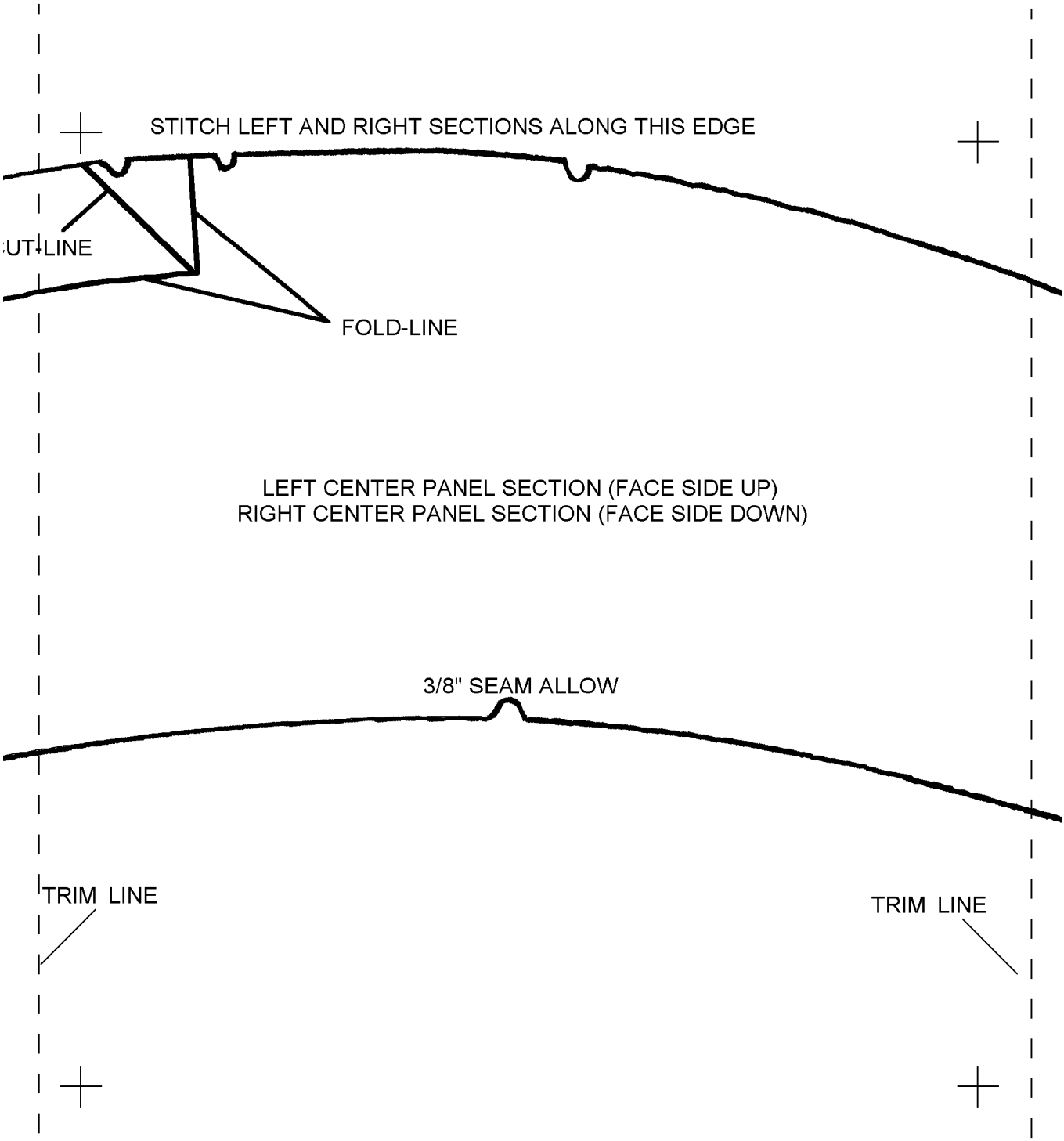

3-17-2

Figure 3-17. Removable Camouflage Helmet Cover (Extra-Large) (2 of 5)

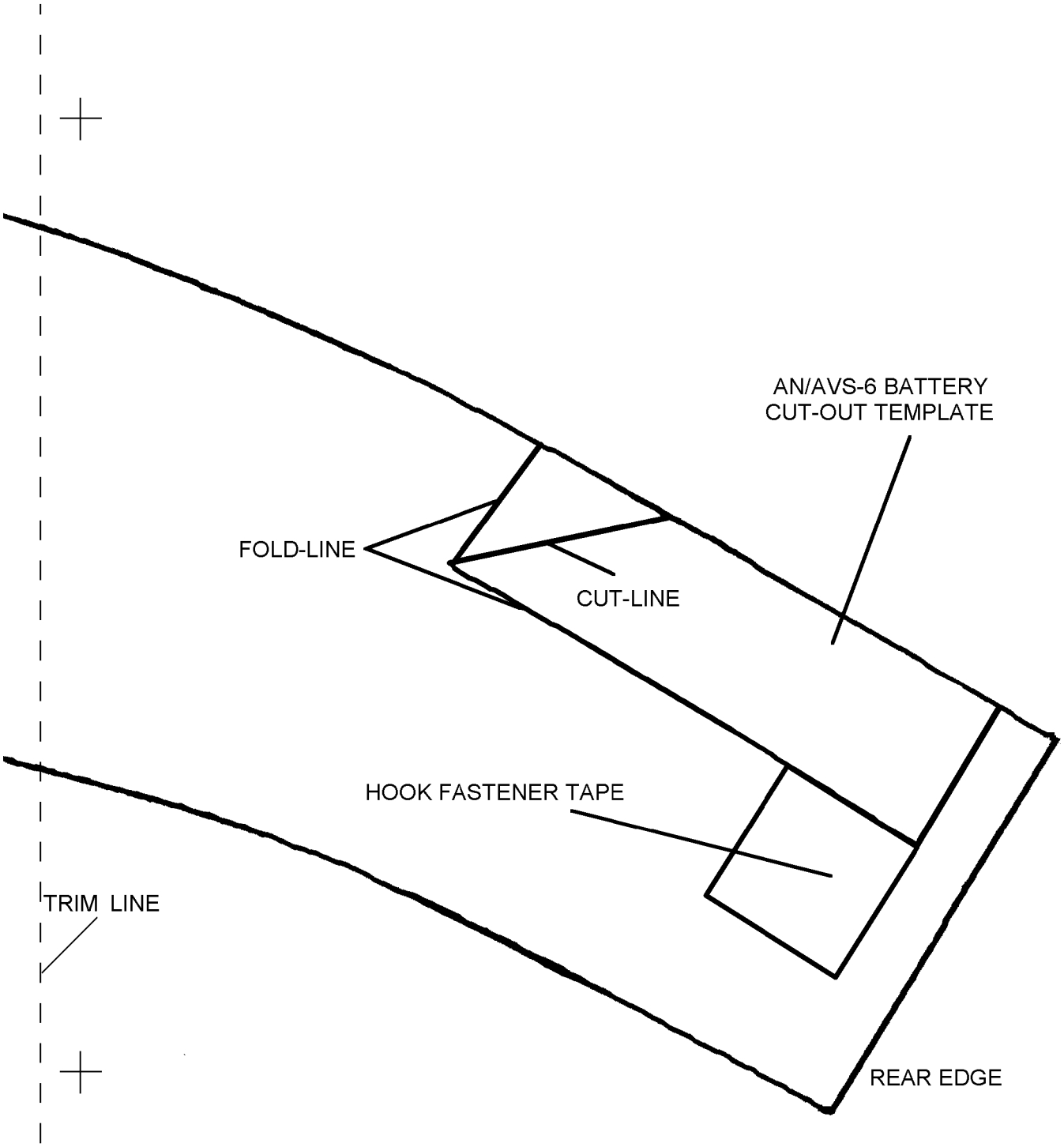

3-17-3

Figure 3-17. Removable Camouflage Helmet Cover (Extra-Large) (3 of 5)

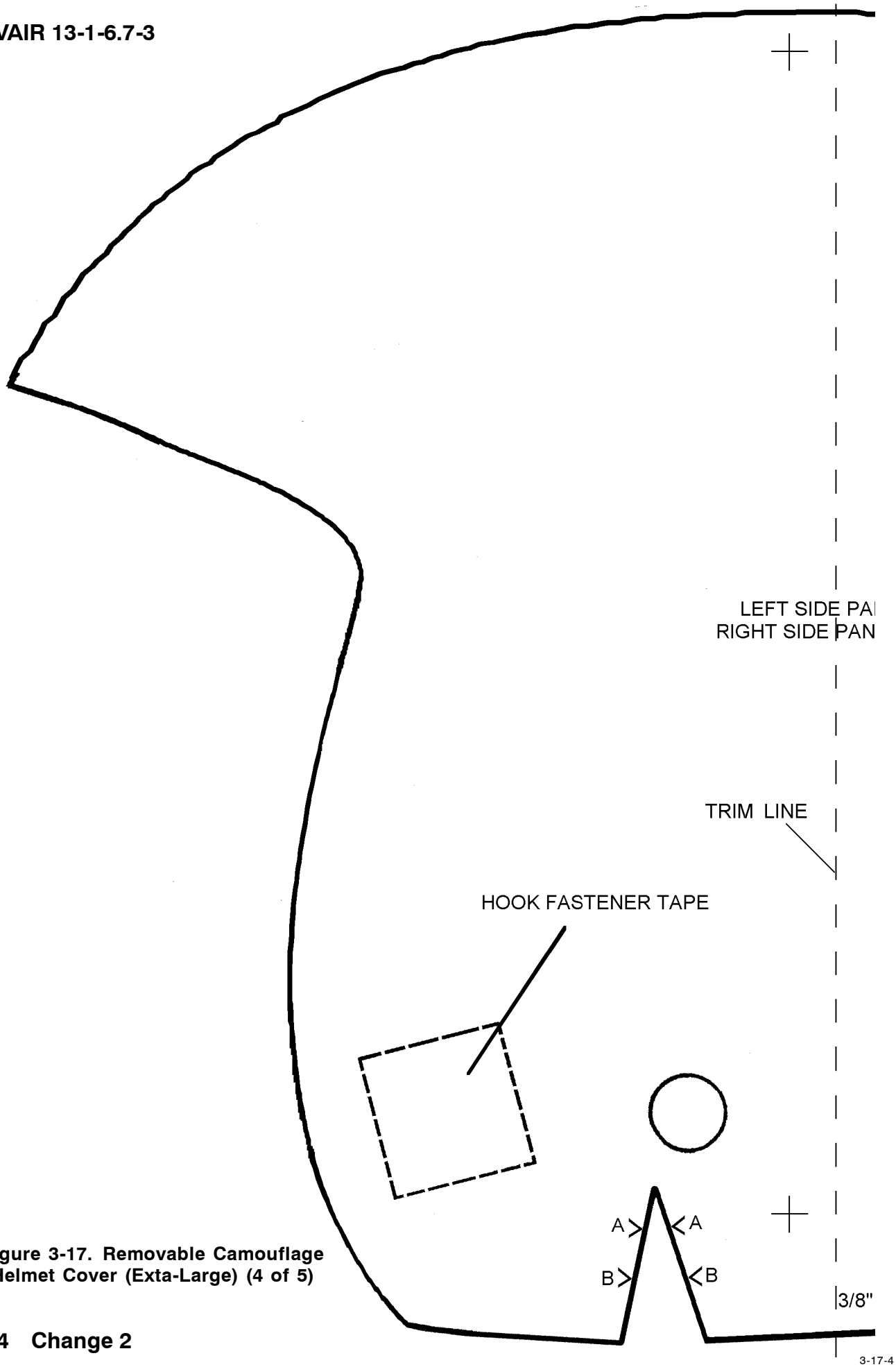

Figure 3-17. Removable Camouflage Helmet Cover (Exta-Large) (4 of 5)

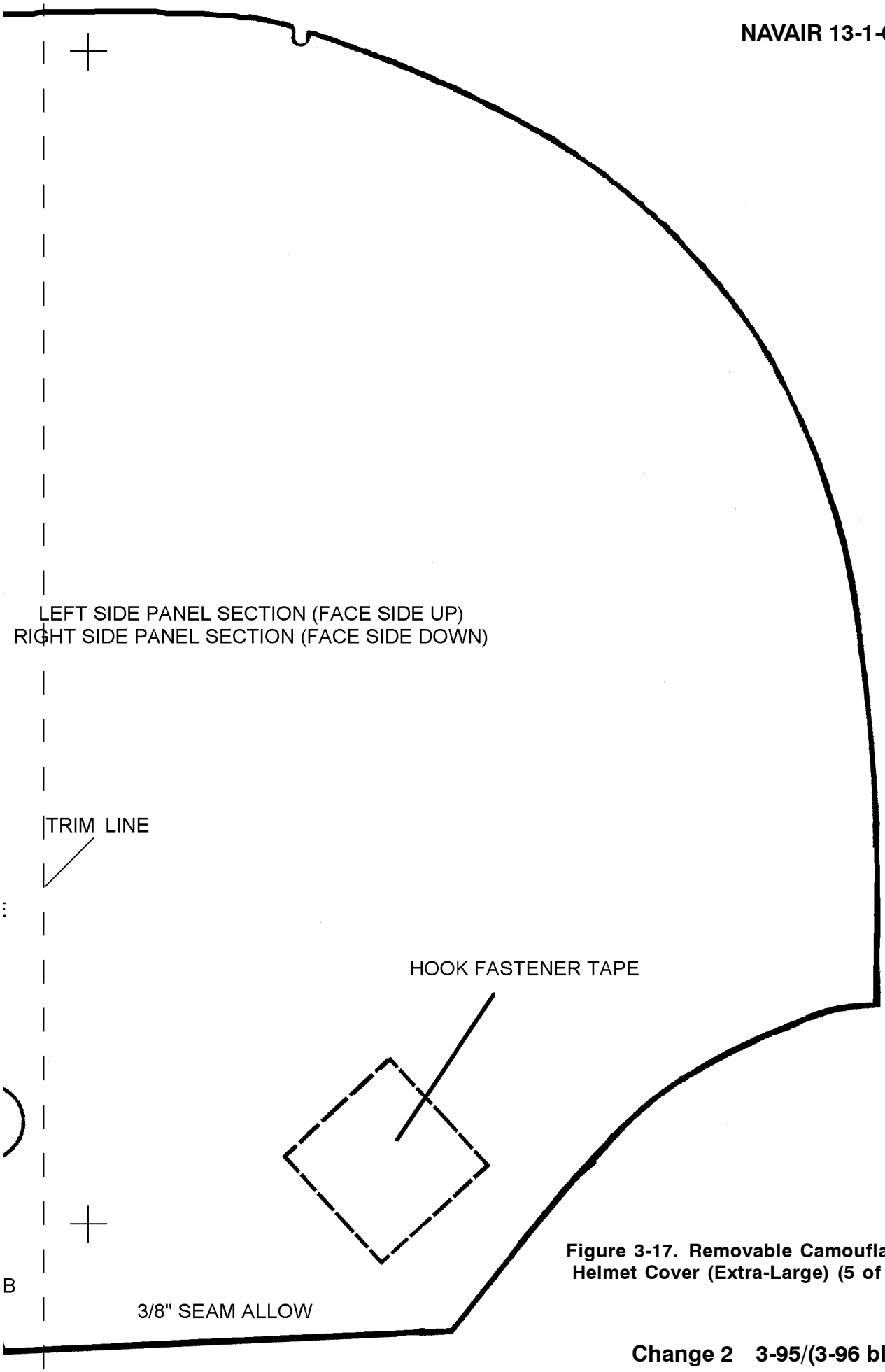

Figure 3-17. Removable Camouflage Helmet Cover (Extra-Large) (5 of 5)

3-17-5

THIS PAGE INTENTIONALLY LEFT BLANK.

NOTE: Procedures for the construction of the pattern.

1. Print out all segments of pattern.
2. Trim all printed segments of pattern at dashed trim line ensuring the alignment marks (crosses) remain on the pattern.
3. Align crosses with adjacent pattern segments and tape in place.
4. After taping, cut out pattern.

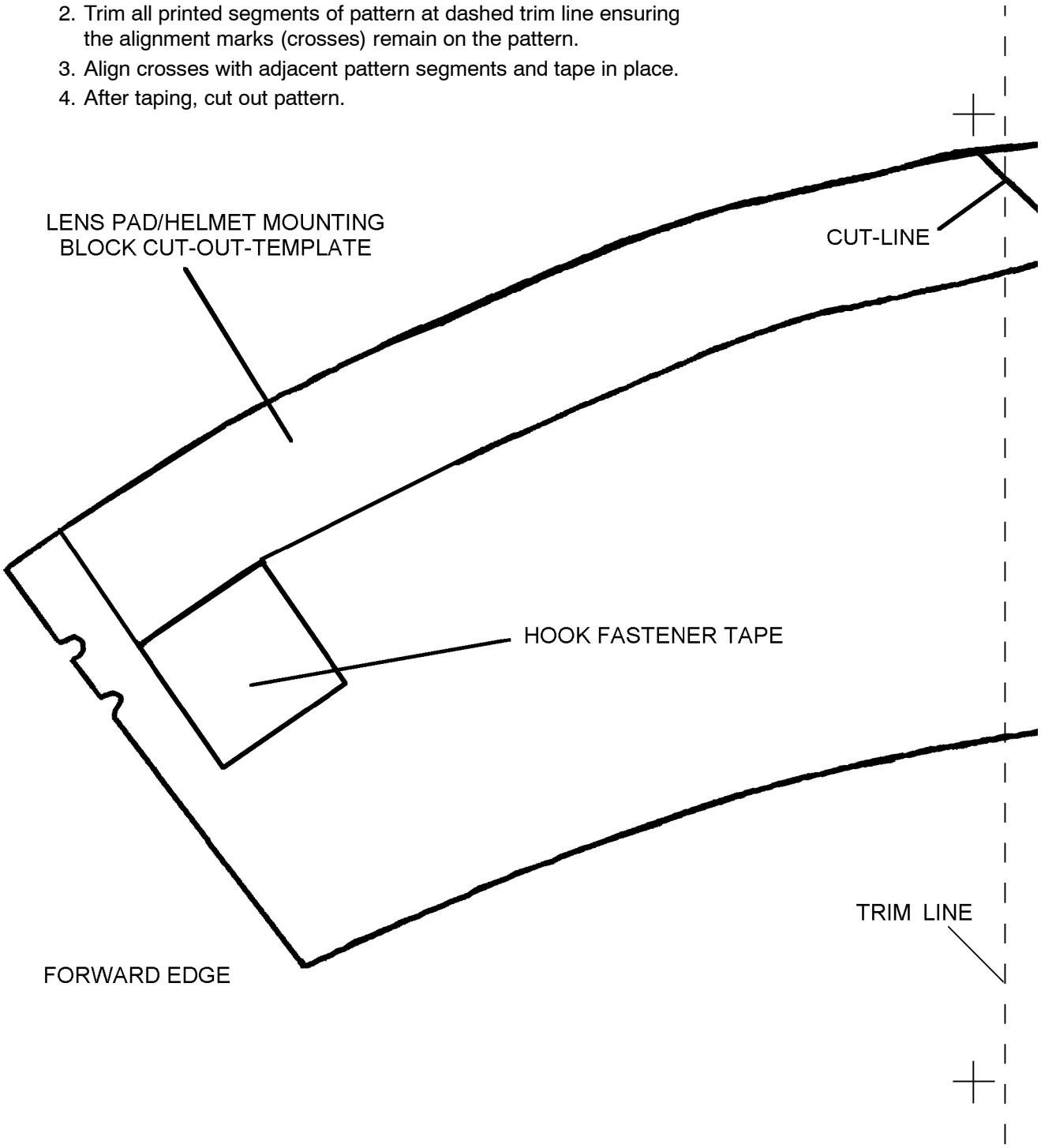

This figure has been divided into multiple segments to facilitate the printing of the pattern.

3-18-1

Figure 3-18. Removable Camouflage Helmet Cover (Extra-Large Wide) (1 of 5)

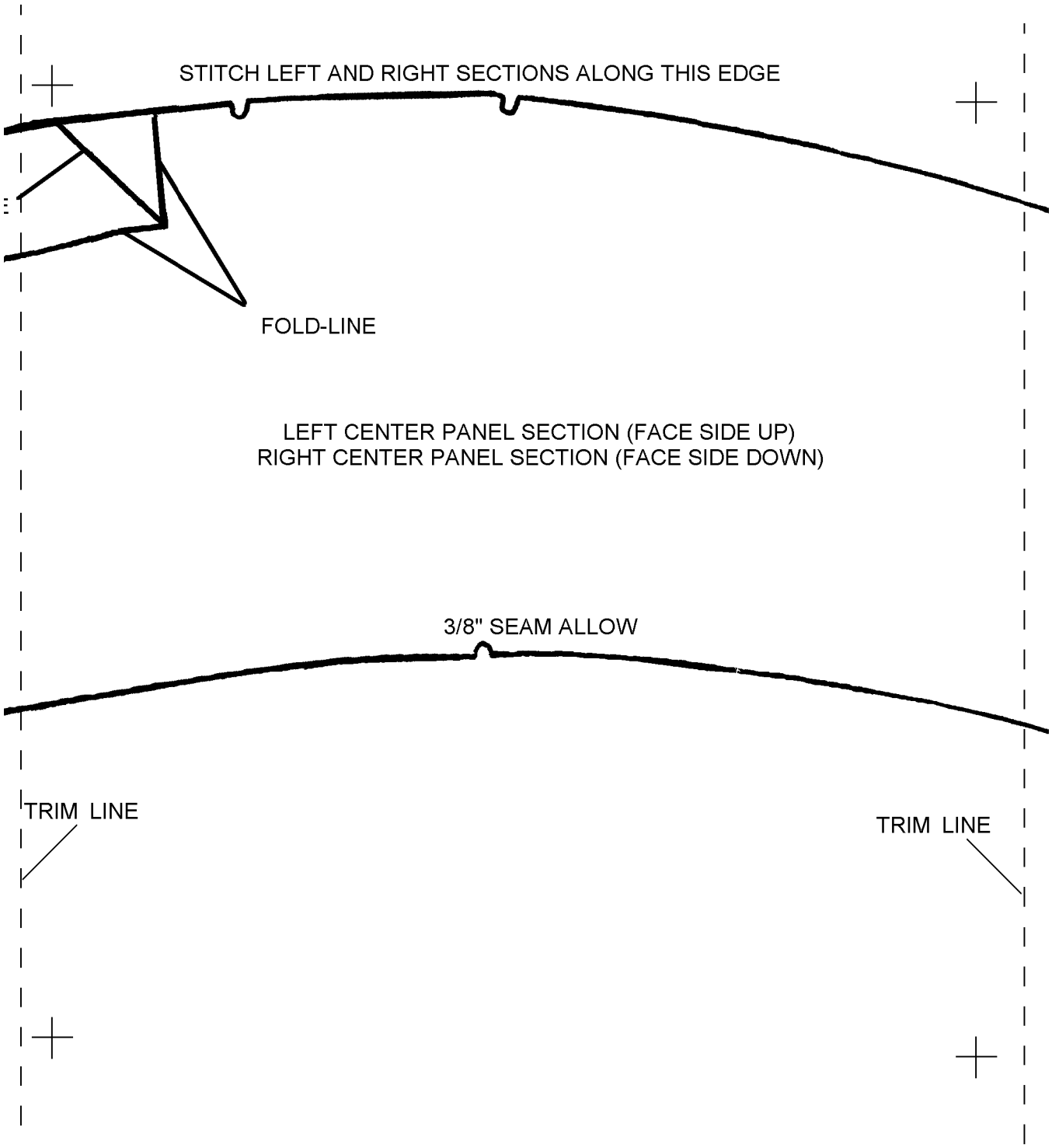

3-18-2

Figure 3-18. Removable Camouflage Helmet Cover (Extra-Large Wide) (2 of 5)

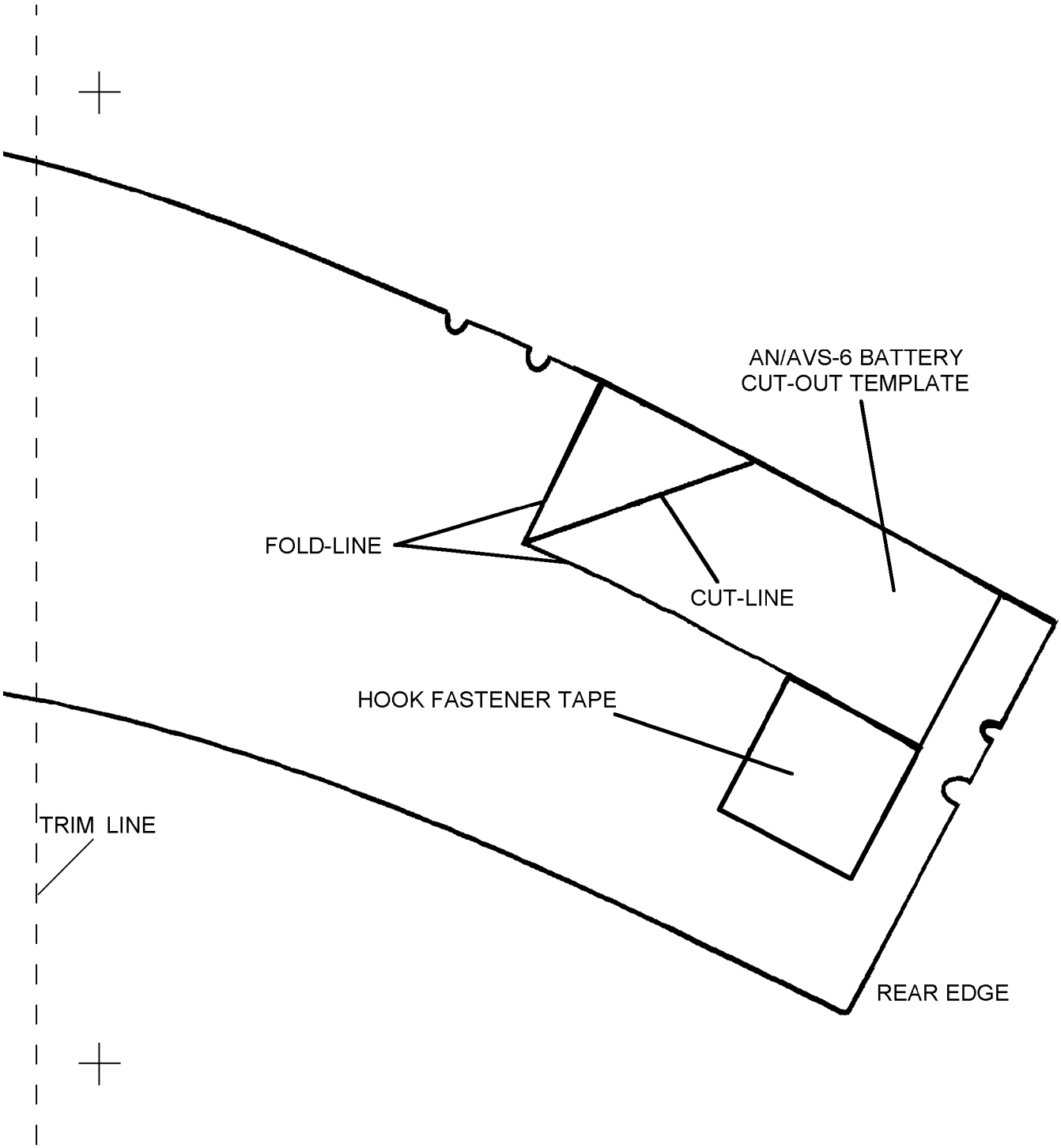

3-18-3

Figure 3-18. Removable Camouflage Helmet Cover (Extra-Large Wide) (3 of 5)

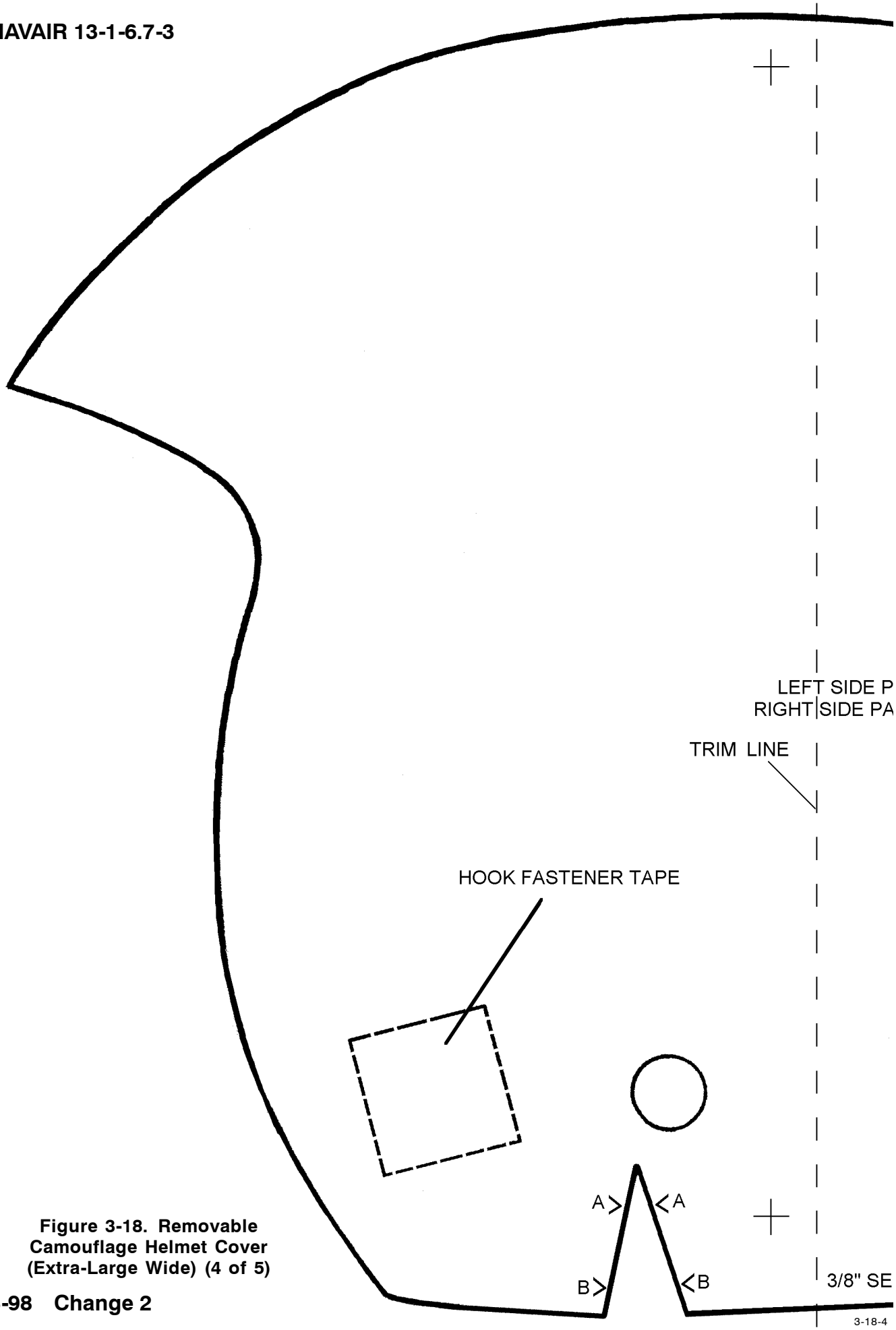

Figure 3-18. Removable Camouflage Helmet Cover (Extra-Large Wide) (4 of 5)

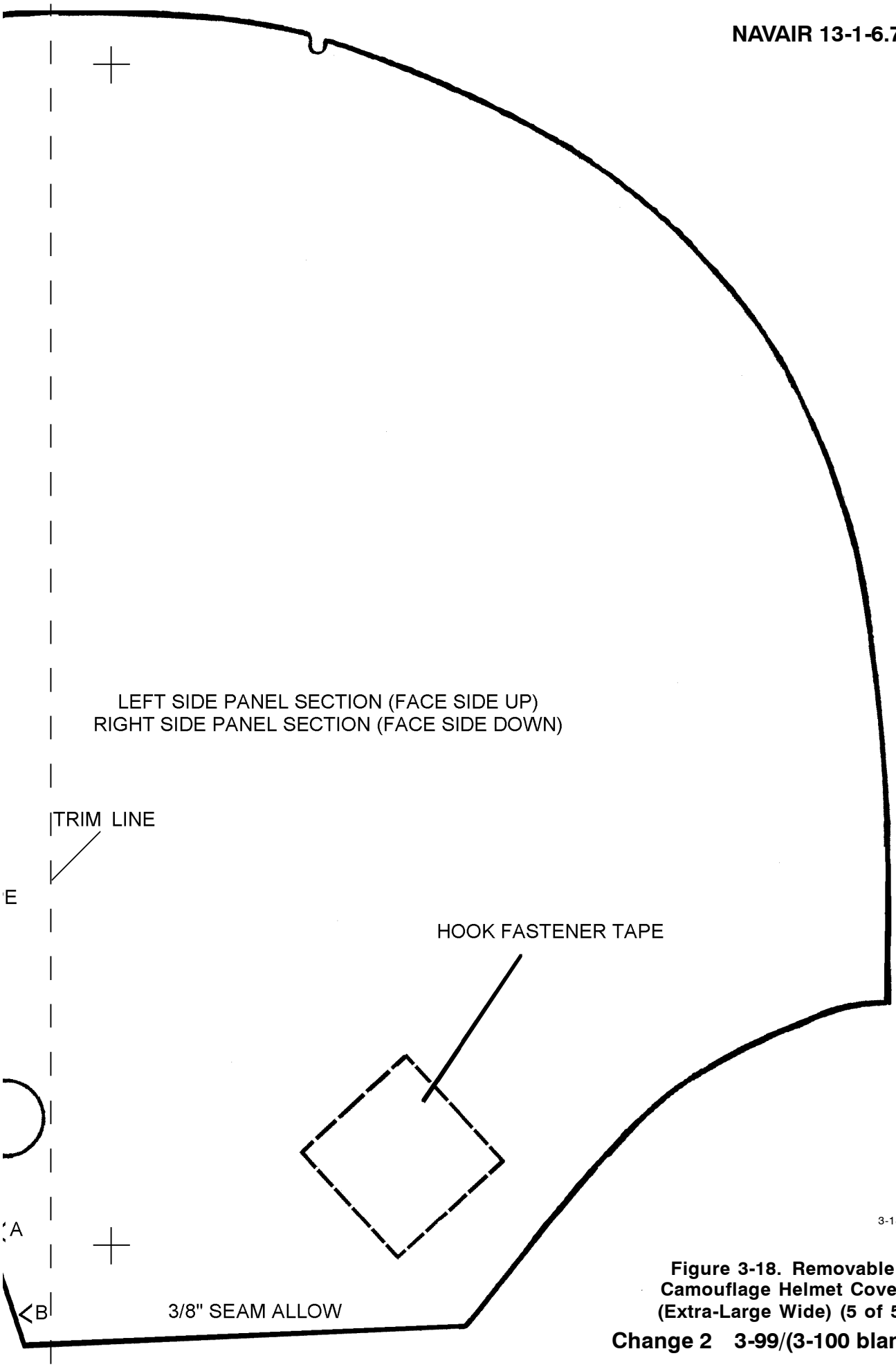

Figure 3-18. Removable Camouflage Helmet Cover (Extra-Large Wide) (5 of 5)

THIS PAGE INTENTIONALLY LEFT BLANK.

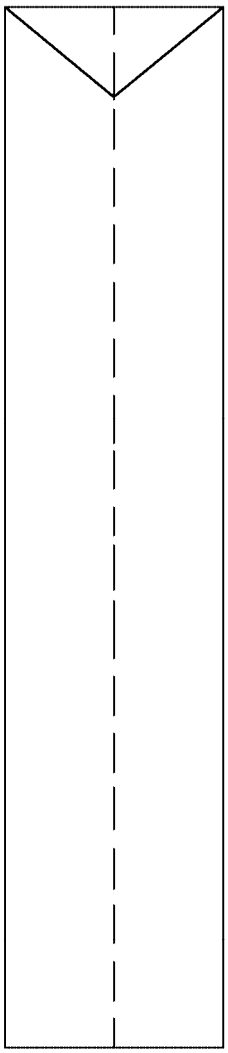

3-19

Figure 3-19. Lens Pad/Helmet Mounting Block Template

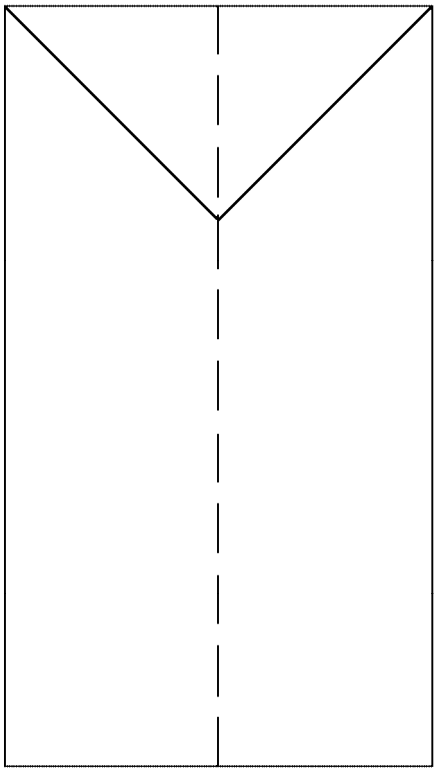

3-20

Figure 3-20. Battery Securing Patch Template

Section 3-6. Illustrated Parts Breakdown

3-111. GENERAL.

3-112. This section lists and illustrates the assemblies and detail parts of the HGU-84/P and HGU-67/P Helmet Assemblies as manufactured by Gentex Corporation (CAGE 97427).

3-113. The IPB is intended for use in the identification, procurement, storing, and issuing of replacement parts. It also illustrates disassembly and assembly relationships. Installation, operation, and maintenance of this helmet shall be performed only by authorized personnel using the instructions documented in the preceding sections.

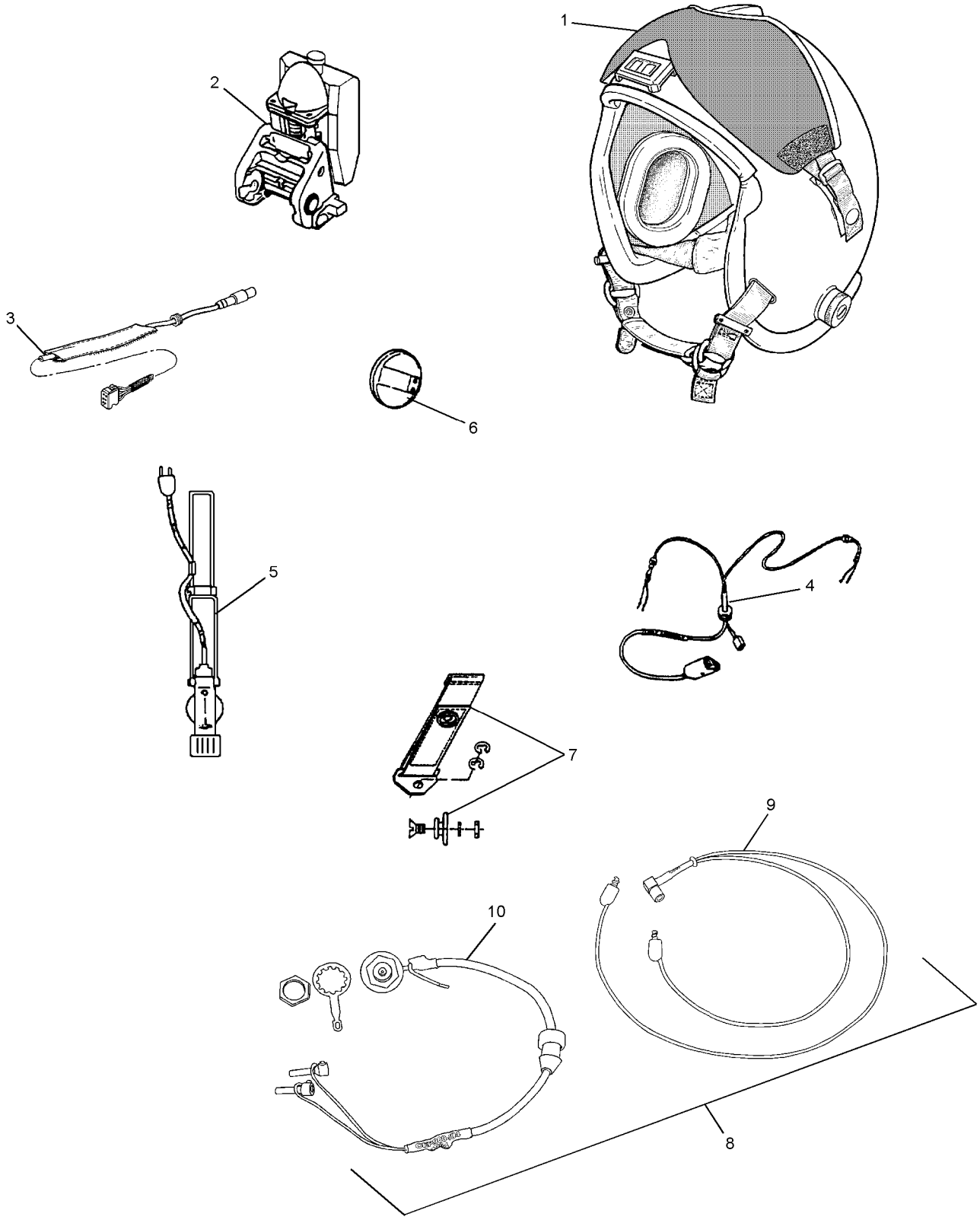

Figure 3-21. HGU-84/P Helmet Assembly Components

Figure and Index Number	Part Number	Description 1 2 3 4 5 6 7	Units Per Assembly	Usable On Code
3-21	—	HGU-84/P HELMET ASSEMBLY . . . . . . COMPONENTS	REF	
-1	89D7748-1	. HELMET ASSEMBLY, HGU-84/P, Medium . . . . . . (Figure 3-23 for BKDN)	1	A
	89D7748-2	. HELMET ASSEMBLY, HGU-84/P, Large . . . . . . (Figure 3-23 for BKDN)	1	B
	89D7748-3	. HELMET ASSEMBLY, HGU-84/P, Extra-Large . . . (Figure 3-23 for BKDN)	1	C
	89D7748-4	. HELMET ASSEMBLY, HGU-84/P, ... Extra-Large Wide (Figure 3-23 for BKDN)	1	D
-2	3151AS150-1	. QUICK DON MOUNT ASSEMBLY . . . . . . (Figure 3-23 for BKDN)	1	
-3	3151AS135-1	. NVIIS WIRING HARNESS ASSEMBLY . . . . . . (ATTACHING PARTS)	1	
	NAS1397-P-6C-B	. CLAMP, Loop (Not Shown)	1	
	NAS1635-08LE5P	. SCREW, Machine, Pan Head (Not Shown)	1	*
	MS51957-42B	. SCREW, Machine, Pan Head (Not Shown)	1	*
		---*---		
-4	M22442/37-4708	. COMMUNICATIONS CABLE ASSEMBLY, ... CX-4708A/AIC	1	
	765AS286-1	. COMMUNICATIONS CABLE ASSEMBLY	1	
	M22442/15-1	. COMMUNICATIONS CABLE ASSEMBLY, ... CX-4832A/AR	1	
	M22442/19-1	. COMMUNICATIONS CABLE ASSEMBLY, ... CX-12972/AR	1	
-5	MIL-M-26542/2	. M-87/AIC BOOM MICROPHONE . . . . . . ASSEMBLY (97427/73B2620-1) (NIIN 00-755-4643)	1	
	MIL-M-26542/2-01	. M-87/AIC BOOM MICROPHONE . . . . . . ASSEMBLY	1	
-6	H-87B/U	. EARPHONE ELEMENT (97427/76A3242)	2	
-7	91B8215	CBR ADAPTER STRAP ASSEMBLY . . . . . . FITTING KIT (Note 1) (Figure 3-32 for BKDN)	1	
-8	CEP104-K04E	CEP KIT (Note 2)	1	
-9	CEP402-C05	. CEP AUDIO/EARPLUG CABLE (Note 2)	1	
-10	CEP900-I04E	. CEP WIRING HARNESS (Note 2)	1	

Notes: 1. CBR Adapter Strap Assemblies Kit, P/N 91B8215, replaces CBR Receivers, P/N 3151AS114.
2. Optional Item. CEP402-C05 and CEP900-I04E can be purchased separately or together as a kit (P/N CEP104-K04E).

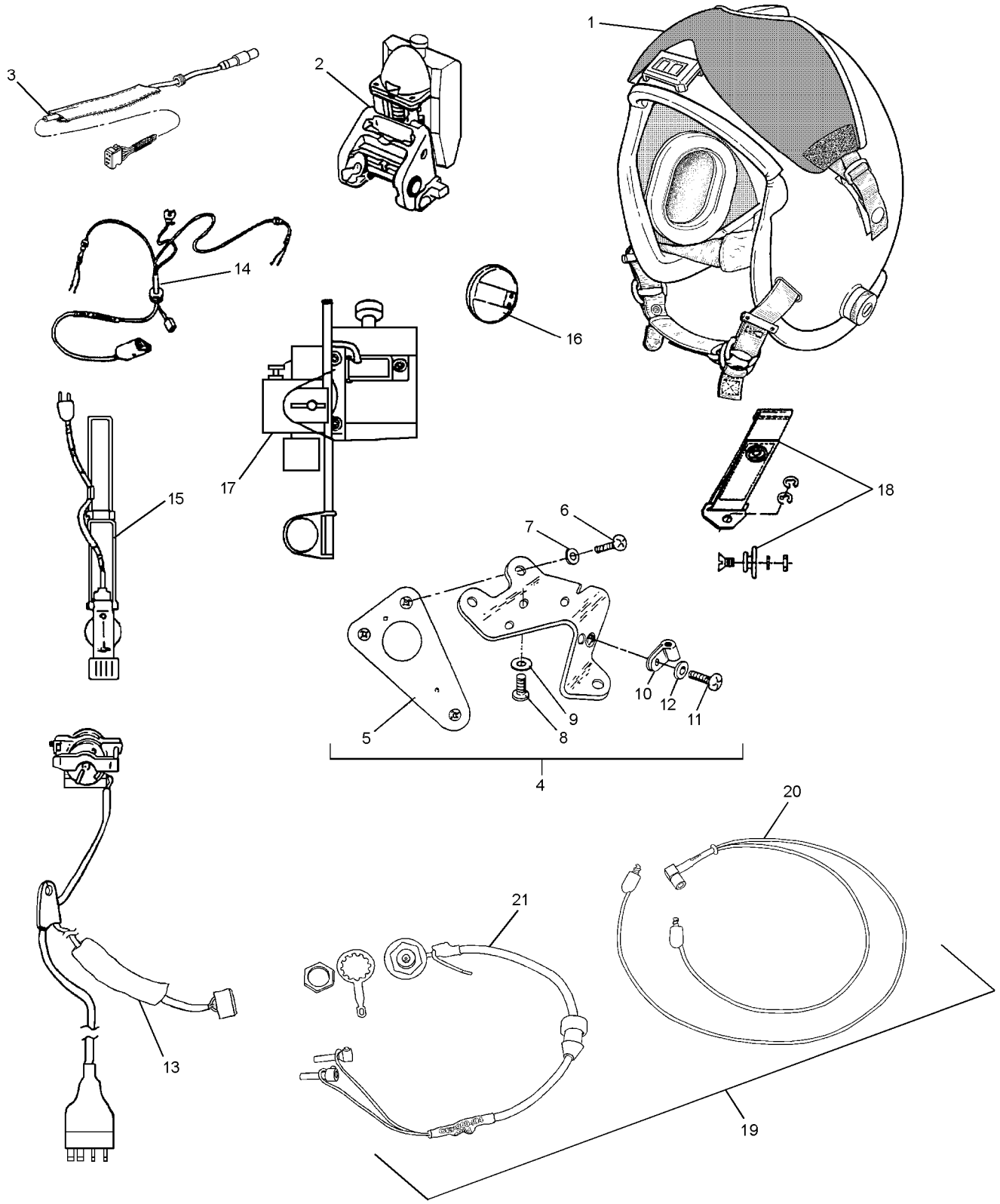

Figure 3-22. HGU-67/P Helmet Assembly Components

Figure and Index Number	Part Number	Description 1 2 3 4 5 6 7	Units Per Assembly	Usable On Code
3-22	3151AS101-1	HGU-67/P HELMET ASSEMBLY . . . . . . COMPONENTS, Medium	REF	A
	3151AS101-2	HGU-67/P HELMET ASSEMBLY . . . . . . COMPONENTS, Large	REF	B
	3151AS101-3	HGU-67/P HELMET ASSEMBLY . . . . . . COMPONENTS, Extra-Large	REF	C
	3151AS101-4	HGU-67/P HELMET ASSEMBLY . . . . . . COMPONENTS, Extra-Large, Wide	REF	D
-1	89D7748-1	. HELMET ASSEMBLY, HGU-84/P, Medium . . . . . . (Figure 3-23 for BKDN)	1	A
	89D7748-2	. HELMET ASSEMBLY, HGU-84/P, Large . . . . . . (Figure 3-23 for BKDN)	1	B
	89D7748-3	. HELMET ASSEMBLY, HGU-84/P, Extra-Large . . . (Figure 3-23 for BKDN)	1	C
	89D7748-4	. HELMET ASSEMBLY, HGU-84/P, ... Extra-Large, Wide (Figure 3-23 for BKDN)	1	D
-2	3151AS150-1	. QUICK DON MOUNT ASSEMBLY . . . . . . (Figure 3-28 for BKDN)	1	
-3	3151AS135-1	. NVIIS WIRING HARNESS ASSEMBLY . . . . . . (ATTACHING PARTS)	1	
	NAS1397-P-6C-B	. CLAMP, Loop (Not Shown)	1	
	NAS1635-08LE5P	. SCREW, Machine, Pan Head (Not Shown)	1	*
	MS51957-42B	. SCREW, Machine, Pan Head (Not Shown) . . . . . . ---*---	1	*

THIS PAGE INTENTIONALLY LEFT BLANK.

Figure and Index Number	Part Number	Description 1 2 3 4 5 6 7	Units Per Assembly	Usable On Code
-4	3151AS121-1	. BRACKET ASSEMBLY, Receptacle, Extra-Large Wide	1	A
	3151AS123-1	. BRACKET ASSEMBLY, Receptacle, Medium	1	B
	3151AS124-1	. BRACKET ASSEMBLY, Receptacle, Extra-Large	1	C
		(ATTACHING PARTS TO HELMET SHELL)		
-5	3151AS119-1	. . DOUBLER, Receptacle	1	
-6	NAS1635-06LE5P	. . SCREW, Machine, Pan Head	3	*
	MS51957-27B	. . SCREW, Machine, Pan Head	3	*
-7	NAS1149CN616B	. . WASHER, Flat	3	
		---*---		
		(ATTACHING PARTS FOR RECEPTACLE)		
-8	NAS1635-04LE4P	. . SCREW	3	
-9	NAS1149CN416B	. . WASHER, Flat	3	
		---*---		
		(ATTACHING PARTS FOR CABLE)		
-10	DS14243-03PB	. . CLAMP, Loop	1	
-11	NAS1635-06LE4P	. . SCREW	1	
-12	NAS1149CN616B	. . WASHER, Flat	1	
		---*---		
-13	7636589	. GUNSIGHT WIRING HARNESS ASSEMBLY (06401) (Figure 3-30 for BKDN)	1	
		(ATTACHING PARTS)		
	NAS1635-08LE6P	. SCREW, Machine, Pan Head (Not Shown)	1	*
	MS51957-43B	. SCREW, Machine, Pan Head (Not Shown)	1	*
	NAS1149CN816B	. WASHER, Lock (Not Shown)	1	
	632104-1	. POST (Not Shown)	1	
		---*---		
-14	M22442/61-1	. COMMUNICATIONS CABLE ASSEMBLY	1	
	M22442/57-1	. COMMUNICATIONS CABLE ASSEMBLY, CX-1365/A	1	
-15	MIL-M-26542/2	. M-87/AIC BOOM MICROPHONE ASSEMBLY (97427/73B2620-1) (NIIN 00-755-4643)	1	
	MIL-M-26542/2-01	. M-87/AIC BOOM MICROPHONE ASSEMBLY	1	
-16	H-87B/U	. EARPHONE ELEMENT (97427/76A3242)	2	
-17	7636587	HELMET GUNSIGHT ASSEMBLY (06401)	1	
-18	91B8215	CBR ADAPTER STRAP ASSEMBLY FITTING KIT (Note 1) (Figure 3-32 for BKDN)	1	
-19	CEP104-K04E	CEP KIT (Note 2)	1	
-20	CEP402-C05	. CEP AUDIO/EARPLUG CABLE (Note 2)	1	
-21	CEP900-I04E	. CEP WIRING HARNESS (Note 2)	1	

Notes: 1. CBR Adapter Strap Assemblies Kit, P/N 91B8215, replaces CBR Receivers, P/N 3151AS114.
2. Optional Item. CEP402-C05 and CEP900-I04E can be purchased separately or together as a kit (P/N CEP104-K04E).

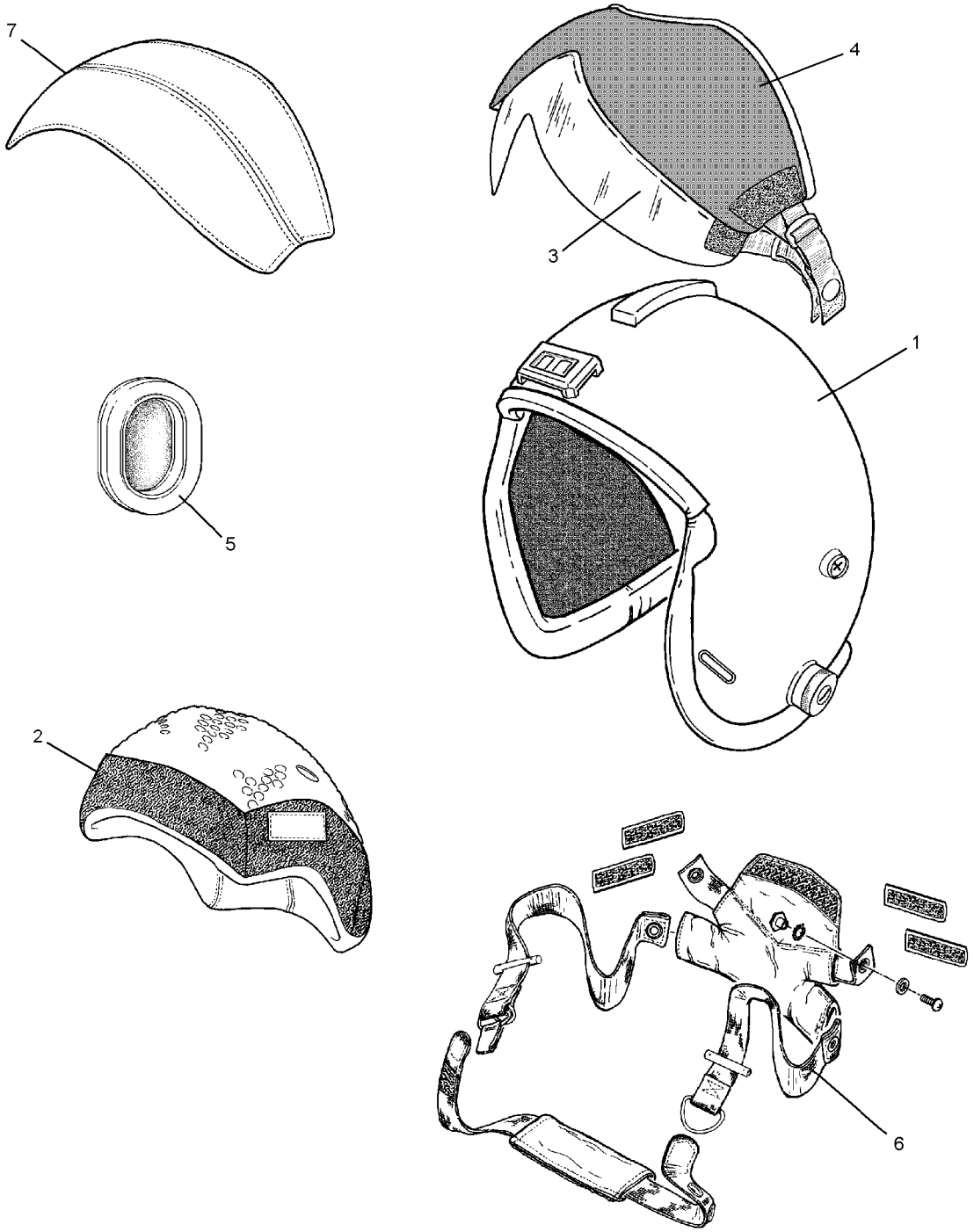

003023

Figure 3-23. Helmet Assembly, HGU-84/P

Figure and Index Number	Part Number	Description 1 2 3 4 5 6 7	Units Per Assembly	Usable On Code
3-23	89D7748-1	HELMET ASSEMBLY, HGU-84/P, Medium	REF	A
	89D7748-2	HELMET ASSEMBLY, HGU-84/P, Large	REF	B
	89D7748-3	HELMET ASSEMBLY, HGU-84/P, Extra-Large	REF	C
	89D7748-4	HELMET ASSEMBLY, HGU-84/P, Extra-Large Wide	REF	D
-1	90C7859-1	. HELMET SHELL ASSEMBLY, Medium . . . . . (Figure 3-24 for BKDN)	1	A
	90C7859-2	. HELMET SHELL ASSEMBLY, Large . . . . . (Figure 3-24 for BKDN)	1	B
	90C7859-3	. HELMET SHELL ASSEMBLY, Extra-Large . . . . . (Figure 3-24 for BKDN)	1	C
	90C7859-4	. HELMET SHELL ASSEMBLY, ... Extra-Large Wide (Figure 3-24 for BKDN)	1	D
-2	85D7087-1P	. TPL ASSEMBLY, Preformed, PRU-52/P, ... Medium (Figure 3-27 for BKDN)	1	A
	85D7087-2P	. TPL ASSEMBLY, Preformed, PRU-52/P, ... Large (Figure 3-27 for BKDN)	1	B
	85D7087-3P	. TPL ASSEMBLY, Preformed, PRU-52/P, ... Extra-Large (Figure 3-27 for BKDN)	1	C
	85D7087-30P	. TPL ASSEMBLY, Preformed, PRU-52/P, ... Extra-Large Wide (Figure 3-27 for BKDN)	1	D
-3	90D7914-1	. VISOR ASSEMBLY, Inner, Clear	1	
-4	90D7915-1	. VISOR ASSEMBLY, Outer, Neutral	1	
-5	90C7885	. EARCUP ASSEMBLY . . . . . (Figure 3-25 for BKDN)	2	
-6	90C7864-1	. INTEGRATED CHIN/NAPE ASSEMBLY, ... Medium (Note 1) (Figure 3-26 for BKDN)	1	A
	90C7864-2	. INTEGRATED CHIN/NAPE ASSEMBLY, ... Large (Note 1) (Figure 3-26 for BKDN)	1	B
	90C7864-3	. INTEGRATED CHIN/NAPE ASSEMBLY, ... Extra-Large (Note 1) (Figure 3-26 for BKDN)	1	C
	90C7864-4	. INTEGRATED CHIN/NAPE ASSEMBLY, ... Extra-Large Wide (Note 1) (Figure 3-26 for BKDN)	1	D
-7	93D8470	. VISOR LENS COVER, Black Leather . . . . . (Note 2)	1	
	93D8497	VISOR BAG (Not Shown)	3	
	95A9255-1	VISOR ASSEMBLY, Amber (Not Shown) (Note 3)	1	
	95A9255-2	VISOR ASSEMBLY, Gradient (Not Shown) (Note 3) . . .	1	
	GW9651-01	VISOR ASSEMBLY, Reduced Profile, Safety . . . . . Stepped-in, Medium (Not Shown) (Note 4)	1	
	GW9651-03	VISOR ASSEMBLY, Reduced Profile, Safety . . . . . Stepped-in, Large (Not Shown) (Note 4)	1	
	GW9651-05	VISOR ASSEMBLY, Reduced Profile, Safety . . . . . Stepped-in, Extra-Large (Not Shown) (Note 4)	1	
	GW9651-09	VISOR ASSEMBLY, Neodymium Laser Eye . . . . . Protective (LEP), Low Profile, Safety Stepped-in, Medium (Not Shown) (Note 4)	1	
	GW9651-11	VISOR ASSEMBLY, Neodymium Laser Eye . . . . . Protective (LEP), Low Profile, Safety Stepped-in, Large (Not Shown) (Note 4)	1	

THIS PAGE INTENTIONALLY LEFT BLANK.

Figure and Index Number	Part Number	Description 1 2 3 4 5 6 7	Units Per Assembly	Usable On Code
	GW9651-13	VISOR ASSEMBLY, Neodymium Laser Eye Protective (LEP), Low Profile, Safety Stepped-in, Extra-Large (Not Shown) (Note 4)	1	
	GW9652-01	VISOR ASSEMBLY, Visor Assembly, Reduced Profile, Safety Stepped-in, Medium (Not Shown) (Note 4)	1	
	GW9652-03	VISOR ASSEMBLY, Visor Assembly, Reduced Profile, Safety Stepped-in, Large/Extra-Large (Not Shown) (Note 4)	1	
	GW9652-05	VISOR ASSEMBLY, Neodymium Laser Eye Protective (LEP), Low Profile, Safety Stepped-in, Medium (Not Shown) (Note 4)	1	
	GW9652-07	VISOR ASSEMBLY, Neodymium Laser Eye Protective (LEP), Low Profile, Safety Stepped-in, Large/Extra-Large (Not Shown) (Note 4)	1	
	GW9653	VISOR ASSEMBLY, Neodymium Laser Eye Protective (LEP) (Not Shown) (Note 4)	1	

Notes:
1. Integrated Chin/Nape Assemblies, P/N 90C7864-1 thru P/N 90C7864-4, replace Integrated Chin/Nape Assemblies, P/N 90D7916-1 thru P/N 90D7916-4.
2. Lens Cover, P/N 93B8447, replaces Lens Cover, P/N 85C7049-1.
3. Additional authorized optional visor for use with the HGU-84/P and HGU-67/P protective helmets. These visors are commercially available from: GENTEX Corporation, Carbondale, PA, 18470. Telephone 570-282-8505.
4. Special purpose visors with part numbers beginning with GW are commercially available from Gentex Western Operations, Rancho Cucamonga, CA., 91730. Telephone (909) 481-7667 (at menu prompt, choose USN MBU-23/P Order Desk).

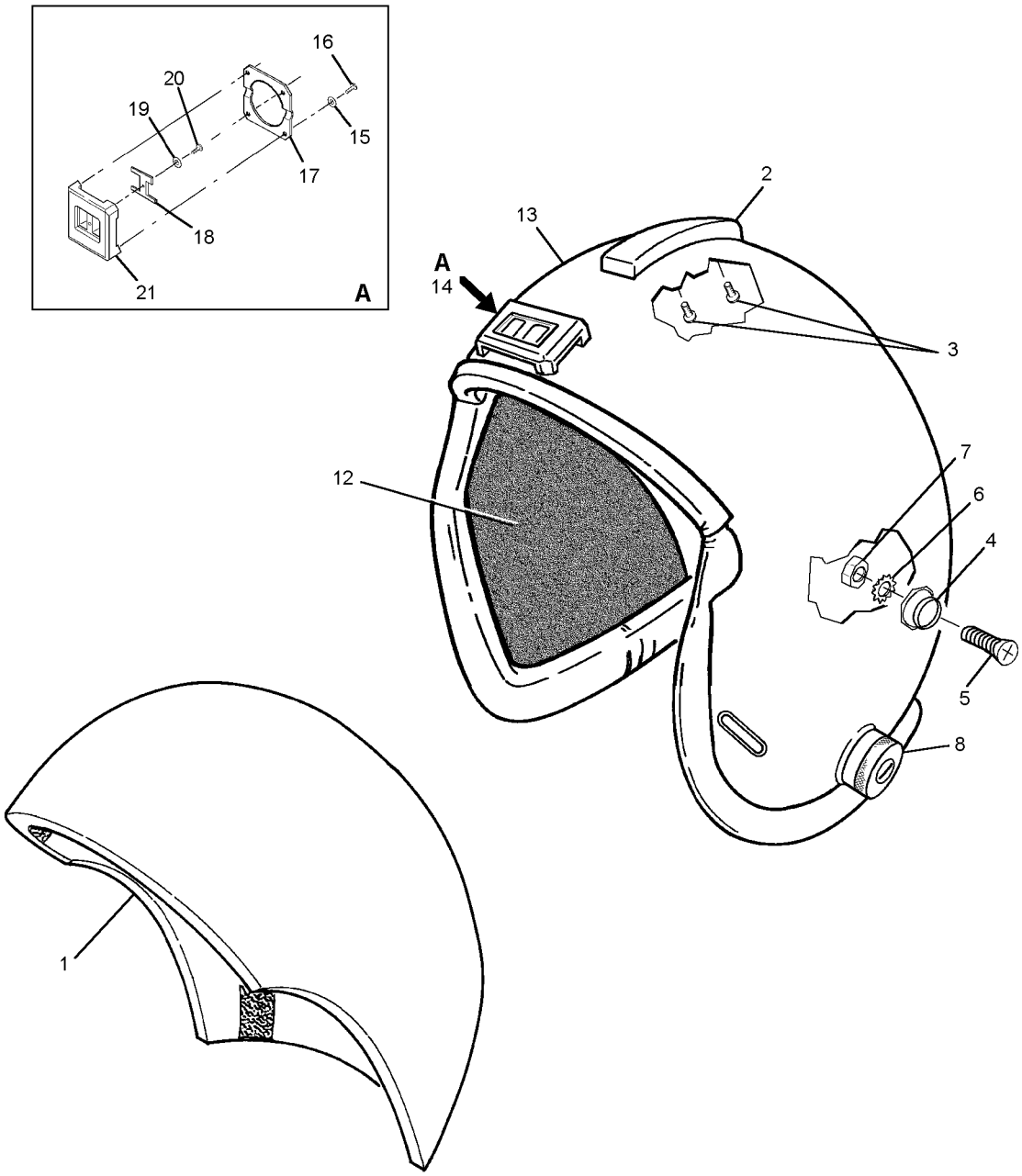

3-24

Figure 3-24. Helmet Shell Assembly

Figure and Index Number	Part Number	Description 1 2 3 4 5 6 7	Units Per Assembly	Usable On Code
3-24	90C7859-1	HELMET SHELL ASSEMBLY, Medium . . . . . . (Figure 3-23 for NHA)	REF	A
	90C7859-2	HELMET SHELL ASSEMBLY, Large . . . . . . (Figure 3-23 for NHA)	REF	B
	90C7859-3	HELMET SHELL ASSEMBLY, Extra-Large . . . . . . (Figure 3-23 for NHA)	REF	C
	90C7859-4	HELMET SHELL ASSEMBLY, Extra-Large Wide . . . . (Figure 3-23 for NHA)	REF	D
-1	90D7860	. LINER, Energy-Absorbing, Medium	1	A
	90D7861	. LINER, Energy-Absorbing, Large	1	B
	90D7862	. LINER, Energy-Absorbing, Extra-Large	1	C
	90D7863	. LINER, Energy-Absorbing, Extra-Large Wide	1	D
-2	90B7954	. LENS PAD (ATTACHING PARTS)	1	
-3	92A8241	. SCREW, Truss Head . . . . . . ---*---	2	
-4	MS27983-3	. SNAP FASTENER, Visor . . . . . . (ATTACHING PARTS)	2	
-5	MS51959-28B	. SCREW, Flat Head	1	
-6	MS35335-58	. WASHER, Lock	1	
-7	MS35649-264B	. NUT, Hex ---*---	1	
-8	765AS300-1	. SWIVEL ASSEMBLY, Microphone Boom	1	
	69A2142	. WASHER, Swivel Assembly (Not Shown)	1	
-9	DELETED			
-10	DELETED			
-11	DELETED			
-12	90C7968M	. EARSHELL PILE FASTENER SET, ... Medium	1	A
	90C7968L	. EARSHELL PILE FASTENER SET, ... Large	1	B
	90C7968XL	. EARSHELL PILE FASTENER SET, ... Extra-Large/Extra-Large Wide	1	C, D
-13	90D7887	. HELMET SHELL, Medium	1	A
	90D7888	. HELMET SHELL, Large	1	B
	90D7889	. HELMET SHELL, Extra-Large	1	C
	90D7890	. HELMET SHELL, Extra-Large Wide	1	D

Figure and Index Number	Part Number	Description 1 2 3 4 5 6 7	Units Per Assembly	Usable On Code
3-24-14	3151AS130-1	. BLOCK ASSEMBLY, Helmet	1	
		(ATTACHING PARTS)		
-15	AN960-XC4L	. WASHER	4	
-16	NAS1635-04LN5	. SCREW, Pan Head	4	
		---*---		
-17	3151AS139	. . BACKUP PLATE	1	
-18	3151AS132	. . RETAINER	1	
		(ATTACHING PARTS)		
-19	NAS620-2	. . WASHER	1	
-20	NAS1635-02LE3P	. . SCREW, Pan Head	1	
		---*---		
-21	3151AS131	. . BLOCK, Helmet	1	

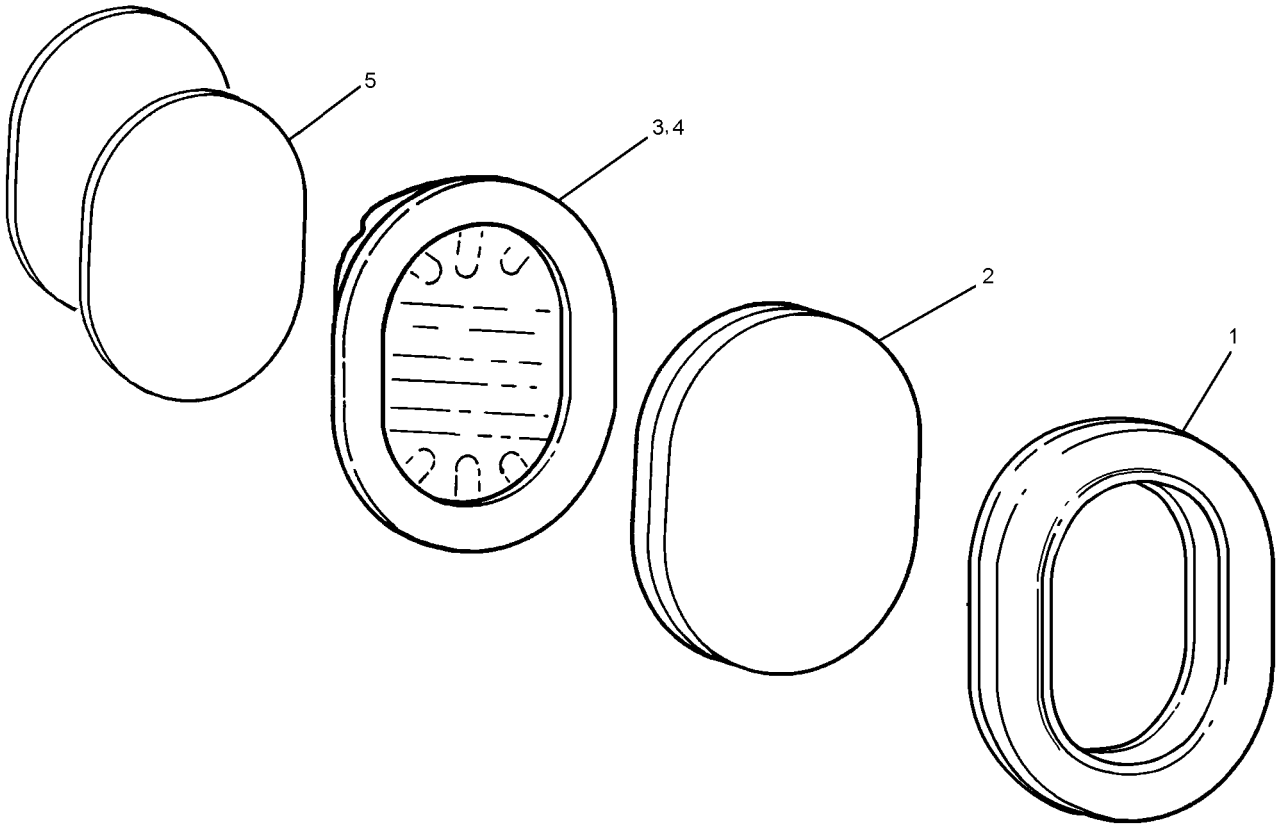

Figure 3-25. Earcup Assembly

Figure and Index Number	Part Number	Description 1 2 3 4 5 6 7	Units Per Assembly	Usable On Code
3-25	90C7885	EARCUP ASSEMBLY . . . . . . (Figure 3-23 for NHA)	REF	
-1	88C7589	. EARSEAL (Note 1)	2	
-2	765AS233-1	. EARPHONE HOLDER (974401-1)	2	
-3	90C7886-1	. EARCUP, Left Hand	1	
-4	90C7886-2	. EARCUP, Right Hand	1	
-5	79C4416-40	. FITTING PADS, EARCUP	2	
	Notes: 1. The Oregon Aero Softseal Ear Cushions are authorized optional alternates for P/N 88C7589 earseals. Oregon Aero Ear Cushions are procured commercially using P/N 20050 (3/4 inch) and P/N 20025 (1 1/8 inch) from Oregon Aero Corporation, Scappoose, OR 97056. Telephone (503) 543-7399.			

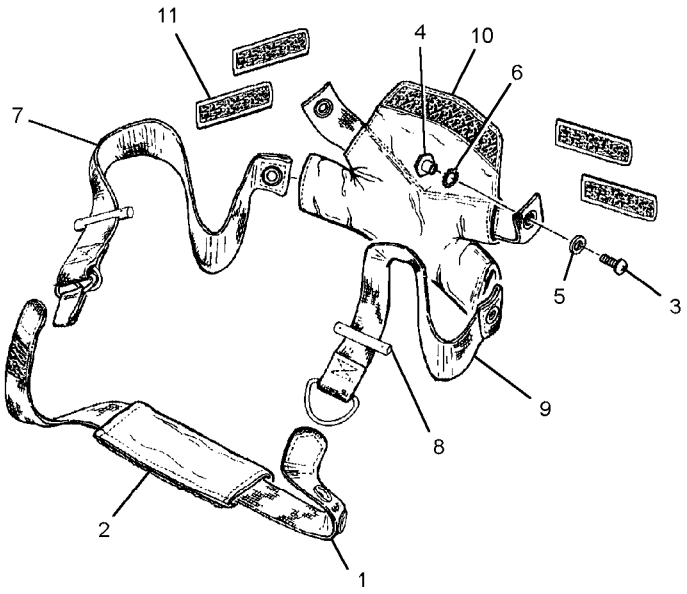

3-26

Figure 3-26. Integrated Chin/Nape Assembly

Figure and Index Number	Part Number	Description 1 2 3 4 5 6 7	Units Per Assembly	Usable On Code
3-26	90C7864-1	INTEGRATED CHIN/NAPE ASSEMBLY, Medium (Note 1) (Figure 3-23 for NHA)	REF	A
	90C7864-2	INTEGRATED CHIN/NAPE ASSEMBLY, Large (Note 1) (Figure 3-23 for NHA)	REF	B
	90C7864-3	INTEGRATED CHIN/NAPE ASSEMBLY, Extra-Large (Note 1) (Figure 3-23 for NHA)	REF	C
	90C7864-4	INTEGRATED CHIN/NAPE ASSEMBLY, Extra-Large Wide (Note 1) (Figure 3-23 for NHA)	REF	D
-1	90B7868	. CHIN STRAP (Note 2)	1	
-2	93B8456	. CHIN PAD (Note 3)	1	
-3	MS51958-61B	. SCREW, Machine, Pan Head	2	
-4	765AS245-2	. T-NUT (Note 4)	2	
-5	AN960-XC416	. WASHER, Flat	2	
-6	MS35335-34	. WASHER, Lock	2	
-7	90D7866-1	. NAPE STRAP, Double D-Ring, Medium (Note 5)	1	A
	90D7866-2	. NAPE STRAP, Double D-Ring, Large/Extra-Large (Note 5)	1	B, C
	90D7866-3	. NAPE STRAP, Double D-Ring, Extra-Large Wide (Note 5)	1	D
-8	93B8471	. CLAMP ASSEMBLY, Nape Strap	2	
-9	90D7867	. NAPE STRAP, Singe D-Ring (Note 6)	1	

Figure and Index Number	Part Number	Description 1 2 3 4 5 6 7	Units Per Assembly	Usable On Code
3-26-10	90D7865-1	. NAPE PAD, Medium (Note 7)	1	A
	90D7865-2	. NAPE PAD, Large (Note 7)	1	B
	90D7865-3	. NAPE PAD, Extra-Large (Note 7)	1	C
	90D7865-4	. NAPE PAD, Extra-Large Wide (Note 7)	1	D
-11	90B7872	. NAPE SPACER PAD KIT	1	
	Notes: 1. Integrated Chin/Nape Assemblies, P/N 90C7864-1 thru -4, replace Integrated Chin/Nape Assemblies, P/N 90D7916-1 thru -4. 2. Chin Strap, P/N 90B7868, replaces Chin Strap, P/N 89C6708. 3. Chin Pad, P/N 93B8456, replaces Chin Pad, P/N 89C7764-1. 4. T-Nut, P/N 765AS245-2, replaces T-Nut, P/N 734434. 5. Double D-Ring Nape Straps, P/N 90D7866-1 thru -3, replace Nape Strap D-Rings, P/N 89B7730-1 and -2. 6. Single D-Ring Nape Strap, P/N 90D7867, replaces Nape Strap D-Ring, P/N 89B7729. 7. Nape Pads, P/N 90D7865-1 thru -4, replace Nape Pads, P/N 84D6899-1 thru -4.			

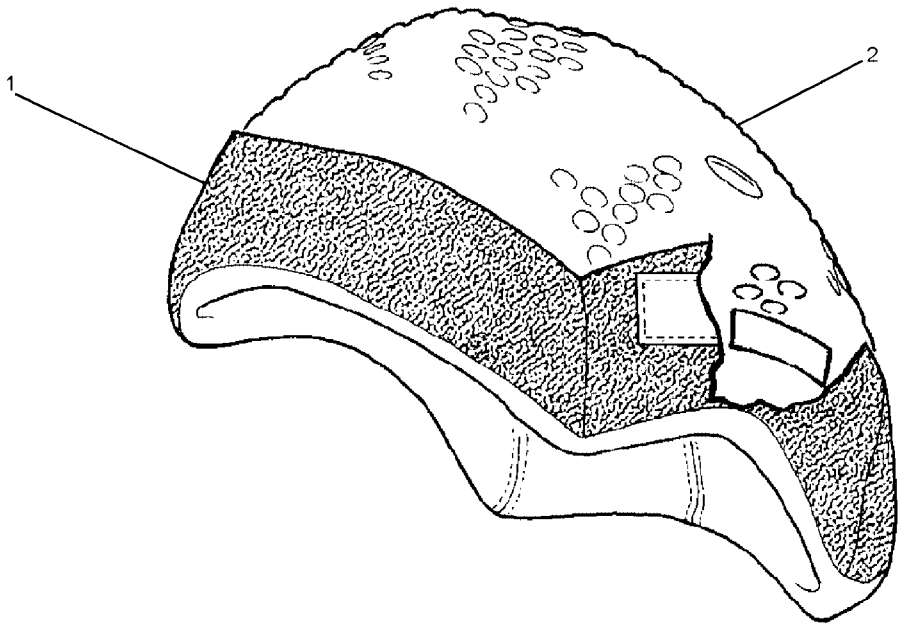

Figure 3-27. Thermoplastic Liner (TPL) Assembly

Figure and Index Number	Part Number	Description 1 2 3 4 5 6 7	Units Per Assembly	Usable On Code
3-27	85D7087-1P	TPL ASSEMBLY, Preformed, PRU-52/P, ... Medium (Figure 3-23 for NHA) (Note 1)	REF	A
	85D7087-2P	TPL ASSEMBLY, Preformed, PRU-52/P, ... Large (Figure 3-23 for NHA) (Note 1)	REF	B
	85D7087-3P	TPL ASSEMBLY, Preformed, PRU-52/P, ... Extra-Large (Figure 3-23 for NHA) (Note 1)	REF	C
	85D7087-30P	TPL ASSEMBLY, Preformed, PRU-52/P, ... Extra-Large Wide (Figure 3-23 for NHA) (Note 1)	REF	D
-1	85D7088-1	. TPL COVER ASSEMBLY, Removable, ... Medium	1	A
	85D7088-2	. TPL COVER ASSEMBLY, Removable, ... Large	1	B
	85D7088-3	. TPL COVER ASSEMBLY, Removable, ... Extra-Large	1	C
	85D7088-30	. TPL COVER ASSEMBLY, Removable, ... Extra-Large Wide	1	D
-2	88D7518-1	. TPL LAYER ASSEMBLY, Preformed, ... Medium	1	A
	88D7518-2	. TPL LAYER ASSEMBLY, Preformed, ... Large	1	B
	88D7518-3	. TPL LAYER ASSEMBLY, Preformed, ... Extra-Large	1	C
	88D7518-30	. TPL LAYER ASSEMBLY, Preformed, ... Extra-Large Wide	1	D
	Notes: 1. Oregon Aero Zetaliners are authorized optional alternates for the TPL assembly. To order, use Oregon Aero P/N 95132, 3, 4, 5 (medium); 95142, 3, 4, 5 (large); 95152, 3, 4, 5 (extra large); 95162, 3, 4, 5 (extra large wide) NIINs TBD.			

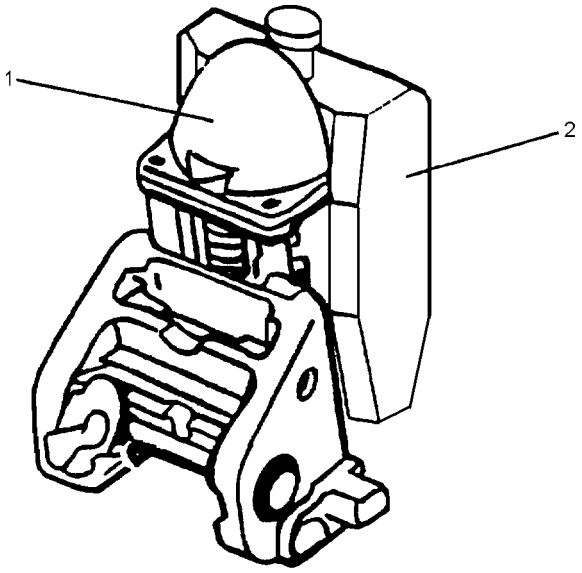

3-28

Figure 3-28. Quick Don Mount Assembly

Figure and Index Number	Part Number	Description 1 2 3 4 5 6 7	Units Per Assembly	Usable On Code
3-28	3151AS150-1	QUICK DON MOUNT ASSEMBLY (Note 1) . . . . . . (Figure 3-21 or 3-22 for NHA)	REF	
-1	5002501	. HOUSING ASSEMBLY	1	
-2	3151AS151-1	. MOUNTING BLOCK ASSEMBLY	1	
		(ATTACHING PARTS)		
	NAS1635-04LN5	. SCREW, Machine, Pan Head (Not Shown)	2	
	NAS1635-04LE7P	. SCREW, Machine, Pan Head (Not Shown)	2	
	NAS620-4L	. WASHER, Flat (Not Shown)	4	
		---*---		
	93B8601	QUICK DON MOUNT MODIFICATION KIT	1	
	Notes: 1. The Quick Don Mount Assembly, P/N 3151AS150-1, is not repairable, however, it may be assembled from a Quick Don Mount Modification Kit, P/N 93B8601, and a Housing Assembly, P/N 5002501, removed from existing AN/AVS-6(V)1 or AN/AVS-6(V)2 mounts. Refer to paragraph 3-50 for buildup instructions.			

Figure 3-29. Deleted

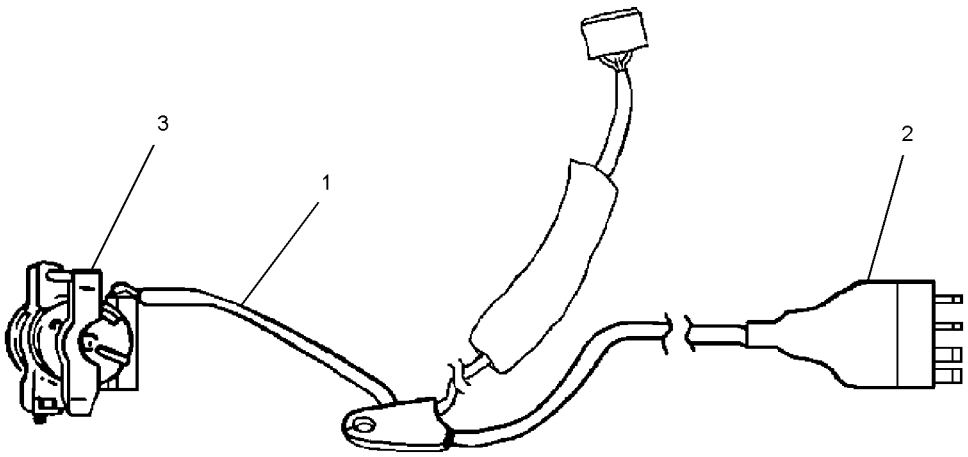

3-30

Figure 3-30. Gunsight Wiring Harness Assembly

Figure and Index Number	Part Number	Description 1 2 3 4 5 6 7	Units Per Assembly	Usable On Code
3-30	7636589	GUNSIGHT WIRING HARNESS ASSEMBLY . . . . . . (Figure 3-22 for NHA) (ATTACHING PARTS)	REF	
	NAS1635-08LE6P	SCREW, Machine, Pan Head (Not Shown)	1	*
	MS51957-43B	SCREW, Machine, Pan Head (Not Shown)	1	*
	NAS1149CN816B	WASHER, Flat (Not Shown)	1	
	632104-1	POST (Not Shown)	1	
		---*---		
-1	11318A	. CABLE ASSEMBLY (18068)	1	
-2	261-31-08-030	. CONNECTOR PLUG, A1P1	1	
-3	2278613-00	. RECEPTACLE ASSEMBLY	1	

Figure 3-31. Deleted

Pages 3-119 and 3-120 Deleted

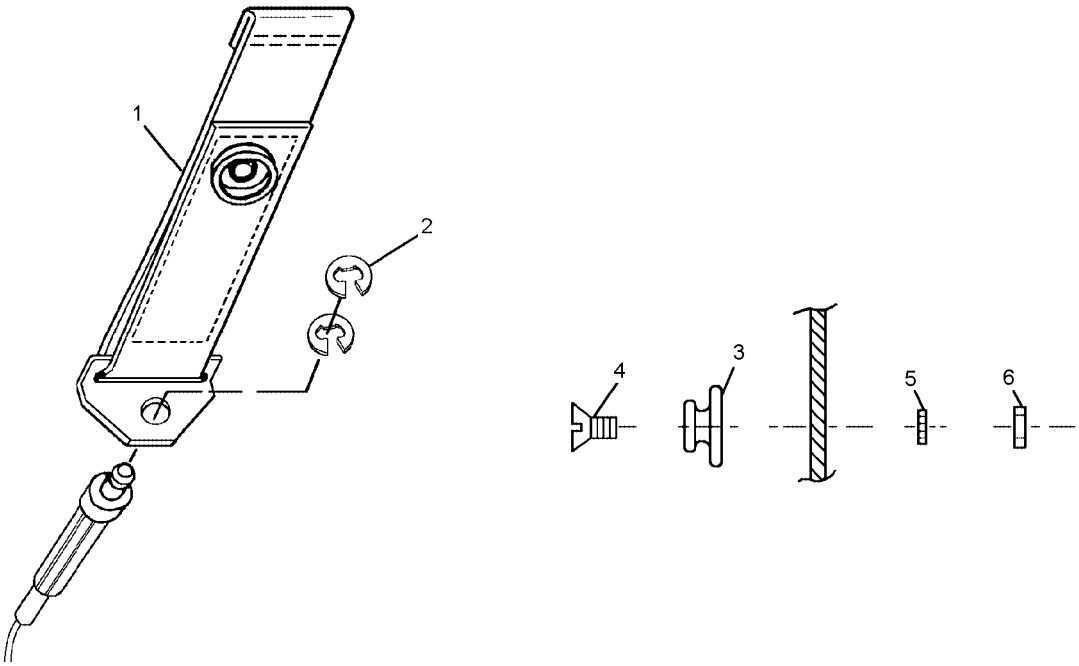

3-32

Figure 3-32. CBR Adapter Strap Assembly Fitting Kit

Figure and Index Number	Part Number	Description 1 2 3 4 5 6 7	Units Per Assembly	Usable On Code
3-32	91B8215	CBR ADAPTER STRAP ASSEMBLY . . . . . . FITTING KIT (Note 1)	REF	
-1	91B8215-1	. CBR ADAPTER STRAP ASSEMBLY . . . . . . (ATTACHING PARTS)	2	
-2	MS16634-4014	. RING, Retaining . . . . . . ---*---	2	
-3	MS27983-3	. STUD, Snap Fastener . . . . . . (ATTACHING PARTS)	2	
-4	MS51959-28B	. SCREW, Flat	1	
-5	MS35335-58	. WASHER, Lock	1	
-6	MS35649-264B	. NUT, Hex . . . . . . ---*---	1	
	Notes: 1. CBR Adapter Strap Assemblies, P/N 91B8215, replace CBR Receivers, P/N 3151AS114.			

NUMERICAL INDEX

Part Number	Figure and Index Number	SM&R Code
AN960-XC4L	3-24-15	PAOZZ
AN960-XC416	3-26-5	PAOZZ
CEP104-K04E	3-21-8	XDOZZ
	3-22-19	XDOZZ
CEP402-C05	3-21-9	XDOZZ
	3-22-20	XDOZZ
CEP900-I04E	3-21-10	XDOZZ
	3-22-21	XDOZZ
DS14243-03PB	3-22-10	XAOZZ
GW9651-01	3-23	
GW9651-03	3-23	
GW9651-05	3-23	
GW9651-09	3-23	
GW9651-11	3-23	
GW9651-13	3-23	
GW9652-01	3-23	
GW9652-03	3-23	
GW9652-05	3-23	
GW9652-07	3-23	
GW9653	3-23	
H-87B/U	3-21-6	PAOZZ
	3-22-16	PAOZZ
MIL-M-26542/2	3-21-5	PA--Z
	3-22-15	PA--Z
MIL-M-26542/2-01	3-21-5	PA--Z
	3-22-15	PA--Z
MS16634-4014	3-32-2	PA---
MS27983-3	3-24-4	PAOZZ
	3-32-3	PAOZZ
MS35335-34	3-26-6	PAOZZ
MS35335-58	3-24-6	PAOZZ
	3-32-5	PAOZZ
MS35649-264B	3-24-7	PAOZZ
	3-32-6	PAOZZ
MS51957-27B	3-22-6	PAGZZ
MS51957-42B	3-21-3	PAOZZ
	3-22-3	PAOZZ
MS51957-43B	3-22-13	PAOZZ
	3-30	PAOZZ
MS51958-61B	3-26-3	PAOZZ
MS51959-28B	3-24-5	PAOZZ
	3-32-4	PAOZZ
M22442/15-1	3-21-4	PAOZZ
M22442/19-1	3-21-4	PAOZZ
M22442/37-4708	3-21-4	PAOZZ
M22442/57-1	3-22-14	PAOZZ
M22442/61-1	3-22-14	PAOZZ
NAS1149CN416B	3-22-9	PAGZZ
NAS1149CN616B	3-22-7	PAOZZ
	3-22-12	PAOZZ
NAS1149CN816B	3-22-13	PAOZZ
	3-30	PAOZZ

Part Number	Figure and Index Number	SM&R Code
NAS1635-02LE3P	3-24-20	PAOZZ
NAS1635-04LE4P	3-22-8	PAOZZ
NAS1635-04LE7P	3-28-2	
NAS1635-04LN5	3-24-16	PAOZZ
	3-28-2	PAOZZ
NAS1635-06LE4P	3-22-11	PAOZZ
NAS1635-06LE5P	3-22-6	PAOZZ
NAS1635-08LE6P	3-30	PAOZZ
NAS620-2	3-24-19	PAOZZ
NAS620-4L	3-28-2	PAOZZ
11318A	3-30-1	PAOZZ
2278613-00	3-30-3	PAOZZ
261-31-08-030	3-30-2	PAHZZ
3151AS101-1	3-22	AOOOO
3151AS101-2	3-22	AOOOO
3151AS101-3	3-22	AOOOO
3151AS101-4	3-22	AOOOO
3151AS119-1	3-22-5	XAOZZ
3151AS121-1	3-22-4	PDOZZ
3151AS123-1	3-22-4	PDOZZ
3151AS124-1	3-22-4	PDOZZ
3151AS130-1	3-24-14	PAOZZ
3151AS131	3-24-21	XAOZZ
3151AS132	3-24-18	XAOZZ
3151AS135-1	3-21-3	PAOZZ
	3-22-3	PAOZZ
3151AS139	3-24-17	XAOZZ
3151AS150-1	3-21-2	AOOOO
	3-22-2	AOOOO
	3-28	AOOOO
3151AS151-1	3-28-2	
5002501	3-28-1	PA--Z
632104-1	3-22-13	
	3-30	
69A2142	3-24-8	PAOZZ
7636587	3-22-17	PAOZZ
7636589	3-22-13	PAOOO
	3-30	PAOOO
765AS233-1	3-25-2	PA---
765AS245-2	3-26-4	PAOZZ
765AS286-1	3-21-4	PAOZZ
765AS300-1	3-24-8	PAOZZ
79C4416-40	3-25-5	PAOZZ
85D7087-1P	3-23-2	PAOOO
	3-27	PAOOO
85D7087-2P	3-23-2	PAOOO
	3-27	PAOOO
85D7087-3P	3-23-2	PAOOO
	3-27	PAOOO
85D7087-30P	3-23-2	PAOOO
	3-27	PAOOO
85D7088-1	3-27-1	PAOZZ

NUMERICAL INDEX (Cont)

Part Number	Figure and Index Number	SM&R Code
85D7088-2	3-27-1	PAOZZ
85D7088-3	3-27-1	PAOZZ
85D7088-30	3-27-1	PAOZZ
88C7589	3-25-1	PAOZZ
88D7518-1	3-27-2	XAOZZ
88D7518-2	3-27-2	XAOZZ
88D7518-3	3-27-2	XAOZZ
88D7518-30	3-27-2	XAOZZ
89D7748-1	3-21-1	PDOOO
	3-22-1	PDOOO
	3-23	PDOOO
89D7748-2	3-21-1	PDOOO
	3-22-1	PDOOO
	3-23	PDOOO
89D7748-3	3-21-1	PDOOO
	3-22-1	PDOOO
	3-23	PDOOO
89D7748-4	3-21-1	PDOOO
	3-22-1	PDOOO
	3-23	PDOOO
90B7868	3-26-1	PAOZZ
90B7872	3-26-11	PAOZZ
90B7954	3-24-2	XAOZZ
90C7859-1	3-23-1	PAOOO
	3-24	PDOOO
90C7859-2	3-23-1	PDOOO
	3-24	PDOOO
90C7859-3	3-23-1	PDOOO
	3-24	PDOOO
90C7859-4	3-23-1	PDOOO
	3-24	PDOOO
90C7864-1	3-23-6	PDOOO
	3-26	PDOOO
90C7864-2	3-23-6	PDOOO
	3-26	PDOOO
90C7864-3	3-23-6	PDOOO
	3-26	PDOOO
90C7864-4	3-23-6	PDOOO
	3-26	PDOOO
90C7885	3-23-5	PDOOO
	3-25	PDOOO
90C7886-1	3-25-3	PAOZZ
90C7886-2	3-25-4	PAOZZ
90C7968L	3-24-12	XAOZZ
90C7968M	3-24-12	XAOZZ
90C7968XL	3-24-12	XAOZZ
90D7860	3-24-1	PAOZZ
90D7861	3-24-1	PAOZZ
90D7862	3-24-1	PAOZZ
90D7863	3-24-1	PAOZZ
90D7865-1	3-26-10	PAOZZ
90D7865-2	3-26-10	PAOZZ
90D7865-3	3-26-10	PAOZZ
90D7865-4	3-26-10	PAOZZ
90D7866-1	3-26-7	
90D7866-2	3-26-7	
90D7866-3	3-26-7	
90D7867	3-26-9	
90D7887	3-24-13	XAOZZ
90D7888	3-24-13	XAOZZ
90D7889	3-24-13	XAOZZ
90D7890	3-24-13	XAOZZ
90D7914-1	3-23-3	PAOZZ
90D7915-1	3-23-4	PAOZZ
91B8215	3-21-7	PAOZZ
	3-22-18	PAOZZ
	3-32	PAOZZ
91B8215-1	3-32-1	XAOZZ
92A8241	3-24-3	PAOZZ
93B8456	3-26-2	PAOZZ
93B8471	3-26-8	PAOZZ
93B8601	3-28-2	PAOZZ
93D8470	3-23-7	PAOZZ
93D8497	3-23	PAOZZ
95A9255-1	3-23	
95A9255-2	3-23	

THIS PAGE INTENTIONALLY LEFT BLANK.

CHAPTER 4

TACAIR HELMET ASSEMBLIES FOR FIXED WING AIRCRAFT

Section 4-1. Description

4-1. GENERAL.

4-2. This chapter contains data pertaining to TACAIR helmet assemblies for fixed wing aircraft which includes the HGU-66(V)/P series, HGU-68(V)/P series, HGU-85(V)/P series, HGU-87(V)/P series, and HGU-89/P22P-16 helmet assemblies.

NOTE

Use of the HGU-33/P thru HGU-52/P series helmets and HGU-55/P helmet assemblies has been extended indefinitely. Refer to Section 4-7 (Maintenance of HGU-33/P thru HGU-52/P and HGU-55/P Helmet Assemblies) for the only authorized maintenance procedures applicable to these helmets.

4-3. The HGU-68(V)/P series aircrew protective helmet assemblies feature a lightweight helmet shell constructed of graphite and ballistic nylon trimmed for optimum peripheral vision. The helmets are available in three sizes (medium, large, and extra-large). They afford enhanced stability through the use of an integrated chin/nape strap assembly. The helmets are designed to provide face, eye, aural, and head protection when properly assembled and fitted to the aircrewmember. The helmet assemblies also house the communications components, allow for the use of the visor assembly or AN/AVS-9(V) Night Vision Image Intensifier Set (NVIIS), and integrate with the MBU-21/P CBR Mask.

4-4. CONFIGURATION.

4-5. The helmet assembly configuration is built from components. In order to obtain the desired configuration for certain aircrew or aircraft applications, refer to tables 4-1 and 4-2.

NOTE

The configuration area of this chapter is divided into two general categories: Major Helmet Assemblies and Major Helmet Components, plus a brief description following each.

4-6. MAJOR HELMET ASSEMBLIES. The following are the major helmet assemblies covered in this chapter as well as a brief description of each. See figures 4-2 through 4-5 for Illustrated Parts Breakdown (IPB) and tables 4-4 through 4-7 for order of assembly.

4-7. HGU-66(V)1/P Helmet Assembly. The HGU-66(V)/P series helmets are interim night attack helmet assemblies incorporating the Night Vision Image Intensifier Sets (NVIIS) and an oxygen mask. The M22442/37-4708 (CX-4708A/AIC) cable assembly is used for communications. This helmet was a limited quantity production of only 750 units. The HGU-66(V)/P series featured a chemically formed, custom fit, two piece inner liner covered with gray leather, foam filled gray leather covered helmet shell edge-roll and the integrated chin/nape strap. The HGU-66(V)1/P is an HGU-66(V)/P configured with the AN/AVS-9(V) mounting plate for NVIIS aided flights. Use the maintenance and repair/replacement procedures for the HGU-85(V)/P series helmets to maintain the HGU-66(V)/P series helmet assemblies. Use figure 4-3 as IPB.

4-8. HGU-68(V)/P Series Helmet Assembly. The HGU-68(V)/P series helmets are designed to replace the HGU-33/P series helmets in all Tactical fixed wing aircraft applications. The assembly is delivered configured with the M22442/37-4708 (CX-4708A/AIC) cable assembly for communications; a 600 knot ejection capable, low profile, single lens visor assembly with interchangeable clear and neutral lenses, an integrated chin/nape strap, an energy absorbing polystyrene impact liner and the PRU-52/P Thermoplastic Liner (TPL) Assembly. Included with the assembly, but not attached, are low profile oxygen mask jaw receivers. See tables 4-1 and 4-2 for helmet configuration and aircraft application. See figure 4-2 for IPB.

Table 4-1. Helmet Configuration Matrix

Helmet Configuration	Liner			Shell		NVIIS	Visors		Ear Phone	Mike and Amp					Cable Clip	Communication Cables/ Cordsets					
	Custom Fit Liner	PRU-52/P	Oregon Areo Zetaliner	PRU-55/P (Holes for Track Visor)	PRU-58/P (Bungy Visor)	AN/AVS-9(V)	EEU-7/P Tracked Visors (Note 1)	Lightweight (Bungy) Visors (Note 2)	MIL-E-18239 (H-87B/U)	MIL-E-26542/2-01, -02, -03	MIL-E-26542/2 (M-87/AIC)	Boom Swivel	M23595/1-2 (AM-3597C/A)	Amp Mounting Bracket	MK-634/AIC	M22442/37-4708 (CX-4708A/AIC)	M22442/30-1 (CX-13155/A)	M22442/30-2 (CX-13164/A)	M22442/15-1 (CX-4832A/AR)	M22442/19-1 (CX-12972/AR)	KMU-561/P22P-16 (NCE Helmet Bladder)
HGU-66(V)1/P	X	–	–	–	–	X	–	X	X	O	O	O	O	O	O	X	O	O	O	O	–
HGU-68(V)/P	–	X	O	X	–	–	X	–	X	O	O	O	O	O	O	X	O	O	O	O	–
HGU-68(V)1/P	–	X	O	X	–	–	X	–	X	O	X	X	O	O	O	O	O	X	O	O	–
HGU-68(V)2/P	–	X	O	X	–	–	X	–	X	X	O	X	O	O	O	O	O	O	X	X	–
HGU-68(V)3/P	–	X	O	X	–	–	X	–	X	X	O	X	X	X	O	O	O	O	O	X	–
HGU-68(V)4/P	–	X	O	X	–	–	X	–	X	X	O	X	X	X	O	O	X	O	O	O	–
HGU-68(V)6/P	–	X	O	X	–	X	–	X	X	–	–	–	–	–	–	X	–	–	–	–	–
HGU-85(V)1/P	–	X	O	–	X	X	–	X	X	–	–	–	–	–	O	X	O	O	O	O	–
HGU-87(V)/P22P-16	–	X	O	X	–	O	X	–	X	O	O	O	O	O	O	X	O	O	O	O	X
HGU-87(V)1/P22P-16	–	X	O	X	–	X	–	X	X	O	O	O	O	O	O	X	O	O	O	O	X
HGU-89/P22P-16	–	X	O	–	X	X	–	X	X	O	O	O	O	O	O	X	O	O	O	O	X

Legend: X - Required
O - Optional
– - Not Applicable

Notes: 1. See Table 4-2A (MBU-12 Trim) or 4-2C (MBU-23/P-24/P Trim) for authorized optional visors.

2. See Table 4-2B (MBU-12 Trim) or 4-2D (MBU-23/P-24/P Trim) for authorized optional visors.

3. Special purpose visors with reference numbers beginning with GW, listed as open purchase, are commercially available from Gentex Western Operations, Rancho Cucamonga, CA., 91730 Telephone (909) 481-7667 (at menu prompt, choose USN MBU-23/P Order Desk). All other special purpose visors listed as open purchase are commercially available from Gentex Corporation, Carbondale PA, 18470 Telephone (570) 282-8505. See tables 4-2A thru 4-2D.

Table 4-2. Helmet Application Matrix

Helmet Designation	Fighter				Attack		ASW	Electronic		Patrol	Cargo	Trainers							
	F/A-18 Series	F-16 Series	F-14 Series	F-5 Series	AV-8B	All Other Attack	S-3 Series	E-2C, TE-2C	EA-6B	P-3 Series	C-2 Series	T-2 Series	TA-4F, J	T-6	TA-7C	TAV-8B	T-34B/C (student)	T-34B/C (instructor) (Note 4)	T-45 Series
HGU-55A/P (Note 3)	X	–	–	–	–	–	–	–	–	–	–	–	–	–	–	–	–	–	–
HGU-66(V)1/P	X	–	O	O	O	-	O	O	O	O	O	O	–	–	–	O	O	O	O
HGU-68(V)/P	X	X	X	–	O	–	–	–	X	–	–	X	X	X	X	X	–	O	X
HGU-68(V)1/P	–	–	–	X	–	–	–	–	–	–	X	–	–	–	–	–	X	O	–
HGU-68(V)2/P	–	–	–	–	–	–	–	–	–	X	–	–	–	–	–	–	–	O	–
HGU-68(V)3/P	–	–	–	–	–	–	X	–	–	–	–	–	–	–	–	–	–	O	–
HGU-68(V)4/P	–	–	–	–	–	–	–	X	–	–	–	–	–	–	–	–	–	O	–
HGU-68(V)6/P	O	–	O	–	O	O	–	–	O	–	–	–	–	–	–	–	–	O	–
HGU-85(V)1/P	O	–	O	–	X	O	–	–	–	–	–	O	O	–	O	O	O	O	O
HGU-87(V)/P22P-16	X	–	O	–	–	–	–	–	–	–	–	–	–	–	–	–	–	O	–
HGU-87(V)1/P22P-16	O	–	–	–	–	–	–	–	–	–	–	–	–	–	–	–	–	O	–
HGU-89/P22P-16	O	–	–	–	–	–	–	–	–	–	–	–	–	–	–	–	–	O	–

Legend: X - Required
O - Optional
– - Not Applicable

Notes:

1. Refer to NATOPS for helmet requirement in aircraft not listed.
2. Helmets for special mission aircraft not listed will be configured the same as the base line aircraft. Communication is dependent upon airframe.
3. F/A-18 E/F JHMCS helmets are maintained in accordance with instructions contained in NA 13-1-6.7-5
4. Instructor Pilots in T-34 Series aircraft who have been issued HGU-84/P series helmets may continue to use those helmets during assignment as instructors in CNATRA T-34 series aircraft. See Chapter 3 for installation of T-Bayonet Microphone Mount authorized for use by T-34 instructor pilots.

Table 4-2A. Helmet, Mask, and Visor Interface Chart, Tracked Visors - (MBU-12/P Trim for HGU-68(V)/P thru (V)4/P Helmets)

Part Number	NIIN	Lens Type
88B7586-2	01-360-7285	EEU-7/P Visor Assembly
90D7972-1	01-360-9320	Neutral Lens, EEU-7/P
90D7972-2	01-362-0314	Clear Lens, EEU-7/P
97A10037-1	—	Amber Lens (Open Purchase) (Note 1)
97A10037-3	—	Gradient Lens (Open Purchase) (Note 1)
GW9654-01	—	Neodymium Laser Eye Protective (Open Purchase) (Note 2)

Notes: 1. Special purpose visors listed as open purchase are commercially available from Gentex Corporation, Carbondale PA, 18470 Telephone (570) 282-8505.
2. Special purpose visors with reference numbers beginning with GW, listed as open purchase, are commercially available from Gentex Western Operations, Rancho Cucamonga, CA., 91730 Telephone (909) 481-7667 (at menu prompt, choose USN MBU-23/P Order Desk).

Table 4-2B. Helmet, Mask, and Visor Interface Chart, Lightweight (Bungy) Visors - (MBU-12/P Trim for HGU-68(V)6/P and HGU-85(V)1/P Helmets)

Part Number	NIIN	Lens Type
80D5189-11	—	Gradient Lens (Open Purchase) (Note 1)
81D5189-3	01-143-2088	Clear Lens
81D5189-4	01-141-5917	Neutral Lens
85D7139-6	—	Amber Lens (Open Purchase) (Note 1)
88C7538-1	—	Safety Visor, Stepped-In, Medium
88C7538-2	—	Safety Visor, Stepped-Out, Medium
88C7538-3	—	Safety Visor, Stepped-In, Large
88C7538-4	—	Safety Visor, Stepped-Out, Large
88C7538-5	—	Safety Visor, Stepped-In, Extra-Large
88C7538-6	—	Safety Visor, Stepped-Out, Extra-Large
GW9651-01	—	Safety Visor, Reduced Profile, Stepped-In, Medium (Open Purchase) (Note 2)
GW9651-03	—	Safety Visor, Reduced Profile, Stepped-In, Large (Open Purchase) (Note 2)
GW9651-05	—	Safety Visor, Reduced Profile, Stepped-In, Extra-Large (Open Purchase) (Note 2)
GW9651-09	—	Visor, Neodymium, Reduced Profile, Stepped-In, Medium (Open Purchase) (Note 2)
GW9651-11	—	Visor, Neodymium, Reduced Profile, Stepped-In, Large (Open Purchase) (Note 2)
GW9651-13	—	Visor, Neodymium, Reduced Profile, Stepped-In, Extra-Large (Open Purchase) (Note 2)
GW9750	—	Neodymium Laser Eye Protective (Open Purchase) (Note 2)

Notes: 1. Special purpose visors listed as open purchase are commercially available from Gentex Corporation, Carbondale PA, 18470 Telephone (570) 282-8505.
2. Special purpose visors with reference numbers beginning with GW, listed as open purchase, are commercially available from Gentex Western Operations, Rancho Cucamonga, CA., 91730 Telephone (909) 481-7667 (at menu prompt, choose USN MBU-23/P Order Desk).

Table 4-2C. Helmet, Mask, and Visor Interface Chart, Tracked Visors - (MBU-23/P-24/P22P-16 Trim for HGU-68(V)/P thru (V)4/P and HGU-87(V)/P22P-16 Helmets)

Part Number	NIIN	Lens Type
90D7972-4	01-439-2339	Neutral Lens, EEU-7/P
90D7972-5	01-439-2347	Clear Lens, EEU-7/P
97A10037-2	—	Amber Lens (Open Purchase) (Note 1)
97A10037-4	—	Gradient Lens (Open Purchase) (Note 1)
GW9654-02	—	Neodymium Laser Eye Protective (Open Purchase) (Note 2)

Notes: 1. Special purpose visors listed as open purchase are commercially available from Gentex Corporation, Carbondale PA, 18470 Telephone (570) 282-8505.
2. Special purpose visors with reference numbers beginning with GW, listed as open purchase, are commercially available from Gentex Western Operations, Rancho Cucamonga, CA., 91730 Telephone (909) 481-7667 (at menu prompt, choose USN MBU-23/P Order Desk).

Table 4-2D. Helmet, Mask, and Visor Interface Chart, Lightweight (Bungy) Visors - (MBU-23/P-24/P22P-16 Trim for HGU-68(V)6/P, HGU-85(V)1/P, HGU-87(V)1/P22P-16 andHGU-89/P22P-16 Helmets)

Part Number	NIIN	Lens Type
89D7697-1	—	Clear Lens
89D7697-2	—	Neutral Lens
92A8058-2	—	Gradient Lens (Open Purchase) (Note 1)
92A8058-5	—	Amber Lens (Open Purchase) (Note 1)
GW9142-06	—	Neodymium Laser Eye Protective (Open Purchase) (Note 2)
GW9652-01	—	Safety Visor, Reduced Profile, Stepped-In, Clear, Medium (Open Purchase) (Note 2)
GW9652-03	—	Safety Visor, Reduced Profile, Stepped-In, Clear, Large/Extra-Large (Open Purchase) (Note 2)
GW9652-05	—	Neodymium, Reduced Profile, Stepped-In, Medium (Open Purchase) (Note 2)
GW9652-07	—	Neodymium, Reduced Profile, Stepped-In, Large/Extra-Large (Open Purchase) (Note 2)

Notes: 1. Special purpose visors listed as open purchase are commercially available from Gentex Corporation, Carbondale PA, 18470 Telephone (570) 282-8505.
2. Special purpose visors with reference numbers beginning with GW, listed as open purchase, are commercially available from Gentex Western Operations, Rancho Cucamonga, CA., 91730 Telephone (909) 481-7667 (at menu prompt, choose USN MBU-23/P Order Desk).

4-9. HGU-85(V)/P Series Helmet Assemblies. The HGU-85(V)/P series helmets are night attack helmets incorporating Night Vision Image Intensifier Sets (NVIIS) to enhance aircrew night mission performance. The HGU-85(V)/P helmet is delivered configured with the M22442/37-4708 (CX-4708A/AIC) cable assembly for communications, attachable lightweight visors clear and neutral, an integrated chin/nape strap, an energy absorbing polystyrene impact liner and the PRU-52/P Thermoplastic Liner (TPL) Assembly. Included with, but not attached, are low profile oxygen mask jaw receivers. The PRU-58/P helmet shell features three factory-fabricated slots in the brow area to permit attachment of the MXU-810/U NVIIS helmet plate, (no longer authorized for use). The HGU-85(V)1/P is an HGU-85(V)/P helmet configured with the AN/AVS-9(V) mounting plate for NVIIS aided flights. Install in accordance with paragraph 4-44. See Figure 4-3 for IPB.

4-10. HGU-87(V)/P22P-16 Series Helmet Assemblies. The HGU-87(V)/P22P-16 helmet is an HGU-68(V)/P helmet modified by Air Crew Systems Change (ACC) No. 642 incorporating the Navy Combat Edge KMU-561/P22P-16 inflatable helmet bladder assembly. See Tables 4-1 and 4-2 for helmet configuration and application. The HGU-87(V)1/P22P-16 helmet is modified for use with the AN/AVS-9(V)NVIIS. Both the HGU-87(V)/P22P-16 and the HGU-87(V)1/P22P-16 helmet assembly shall remain in service until it can no longer be economically repaired at organizational level to meet performance requirements. See Figure 4-4 for IPB.

4-11. HGU-89/P22P-16 Helmet Assembly. The HGU-89/P22P-16 helmet is an HGU-85(V)/P helmet modified by ACC No. 631 incorporating the AN/AVS-9(V) NVIIS and ACC No. 642 incorporating the Navy Combat Edge (NCE) inflatable helmet bladder assembly. See Figure 4-5 for IPB.

4-12. MAJOR HELMET COMPONENTS. The following are the major helmet components, as well as a brief description of each. These components are added to the basic PRU-55/P or PRU-58/P helmet shell assembly in order to achieve a desired helmet assembly configuration. See Figures 4-6 through 4-10 for IPB and Table 4-1 for component application.

4-13. PRU-55/P Helmet Shell Assembly. The PRU-55/P helmet shell assembly is intended to provide head protection during in-flight buffeting and emergency situations such as ejection, bailout, or crash landings. The helmet shell assembly has a styrofoam energy absorbing liner and a fitted leather edgeroll installed. It is designed to resist projectile penetration and to distribute impact forces over the entire head. The PRU-55/P helmet shell assembly is the platform for other components such as the single lens visor assembly, communication devices, and the oxygen mask. A chin/nape strap assembly, and a thermoplastic liner assembly are added to the helmet shell assembly to provide a better fit and increased stability. See Figure 4-6 for IPB.

4-14. PRU-58/P Helmet Shell Assembly. The PRU-58/P helmet shell assembly provides the same protection and allows for the same configuration buildup as the PRU-55/P, except that the PRU-58/P helmet shell assembly accommodates the MXU-810/U NVIIS (no longer authorized for use) and the 81D5189 series lightweight visor or the 88C7538 safety visor.

4-15. PRU-52/P Thermoplastic Liner (TPL) Assembly. The TPL assembly used in conjunction with the styrofoam liner installed in the helmet shell assembly, provides impact energy absorption, helmet stability, and comfort. The TPL assembly consists of a preformed TPL layer assembly and a TPL cover assembly. The TPL assembly comes in three sizes: medium, large, and extra-large. See Figure 4-10 for IPB.

4-16. Single Lens Visor Assembly. The single lens visor assembly provides face and eye protection from impact, projectile penetration, sun-glare, dust, ultraviolet rays, windblast and flash fire. Each assembly is delivered with interchangeable clear and neutral lenses. Three optional special use visors are authorized, the amber lens, P/N 97A10037-1, for use in hazy/overcast conditions during daytime flight operations only. The gradient lens, P/N 97A10037-3, which offers glare protection similar to the neutral lens, however the lower portion of the lens is clear, allowing for un-obscured quick scan of cockpit instruments. This lens is for daylight operations only. The neodymium laser eye protective visor, P/N GW9654-01, provides protection from laser targeting and range finding devices during both day and night flight operations. These lenses are compatible with the MBU-12/P series oxygen mask. If authorized to use the MBU-23/24P22P-16 oxygen mask use the following lenses; Laser Eye Protective visor, P/N GW9654-02, Amber visor, P/N 97A10037-2 or Gradient visor, P/N 97A10037-4. See Figure 4-9 for IPB.

4-17. Lightweight Visor, P/N 81D5189 Series. Lightweight visors provide face and eye protection from impact, projectile penetration, sunglare, ultraviolet rays, laser radiation and dust. P/N 81D5189-3 (NIIN 01-143-2088) is a clear lightweight visor and P/N 81D5189-4 (NIIN 01-141-5917) is a lightweight neutral visor. Additionally two optional special use visors, also compatible with the MBU-12/P Oxygen mask, are authorized. The lightweight amber visor, P/N 85D7139-6 provides enhanced visibility in hazy/overcast conditions. The gradient visor, P/N 80D5189-11 provides glare protection similar to the neutral visor, however the lower portion of the lens is clear allowing for unobscured quick scan of cockpit instruments. Both the amber and gradient visor are for use during daylight flight operations only. If authorized to use the MBU-23/24/P oxygen mask, use amber visor P/N 92A8058-5 or gradient visor P/N 92A8058-2 to provide proper visor/mask interface.

4-18. Safety Visor, P/N 88C7538 Series. The Safety Visors, Stepped In and Stepped Out, are clear components of the HGU-85(V)1/P helmet assembly. The Safety Visors are worn when utilizing the AN/AVS-9(V) NVIIS and provide eye and facial windblast protection.

4-19. Communication Cable Assemblies. Each of the helmet assemblies is outfitted with the appropriate communication components for operation with the aircraft. See tables 4-1 and 4-2.

4-20. M26542/2-01 Boom Microphone Assembly. The boom microphone assembly provides communication when the oxygen mask is not in use.

4-21. Bayonet Receiver Assembly. The bayonet receiver assembly allows for the use of an oxygen mask.

4-22. GROUND SUPPORT EQUIPMENT.

4-23. TTU-489/E OXYGEN HOSE AND COMMUNICATIONS TEST SET. The TTU-489/E Test Set, P/N 1827AS100-1 is required to test the communications components of the helmet and oxygen mask. Refer to NAVAIR 17-15BC-22.

4-24. TTU-551/E NCE LEAKAGE TESTER. The TTU-551/E leakage test set (figure 4-1) is required to perform leakage tests on the KMU-561/P22P-16 bladder assembly of the HGU-87(V)/P22P-16 and HGU-89/P22P-16 Helmet Assemblies. The Helmet Bladder Test Adapter is an item of special support equipment provided with the TTU-551/E test set. If the adapter should become lost or broken, refer to NAVAIR 17-15GB-505 for fabrication instructions.

4-25. FLYER'S HELMET BAG (MIL-B-43290J). The flyer's helmet bag is a nylon fabricated bag and is used for holding the aircrewmember's helmet and auxiliary equipment.

4-26. APPLICATION.

4-27. Refer to table 4-2 for application of helmet assemblies covered in this chapter.

4-28. REFERENCE NUMBERS, ITEMS, AND SUPPLY DATA.

4-29. Section 4-6, Illustrated Parts Breakdown, contains information on each assembly, subassembly, and component part of this series of helmet assemblies. It also contains figure and index numbers, reference or part numbers, description, and units per assembly. Source, Maintenance, and Recoverability (SM&R) codes are indicated in the Numerical Index.

Section 4-2. Sizing

4-30. GENERAL.

4-31. The concept of sizing as used in this chapter refers to the basic methods to be followed by the Aircrew Survival Equipmentman for requisitioning the proper size helmet shell from supply. Once the basic helmet shell assembly size has been determined and requisitioned, the helmet shell assembly is ready for buildup to the ultimate configuration desired (Section 4-3).

4-32. SIZING.

4-33. The helmet shell assembly required for each configuration is determined by the helmet shell size and the type of visor assembly needed for the helmet configuration buildup. The illustrated parts breakdowns (figures 4-2 through 4-5) indicate which helmet shell assembly (part number) is required for each configuration.

4-34. SIZING THE BASIC PRU-55/P OR PRU-58/P HELMET SHELL ASSEMBLY. To select the proper size helmet shell assembly for the aircrewmember, proceed as follows:

1. If TACAIR helmets are available, aircrewmember should trial fit to determine correct size to be ordered. If TACAIR helmets are not available, measure the circumference of the head, at the hatband line, with a tape measure. Refer to table 4-3 as a guide for sizing.

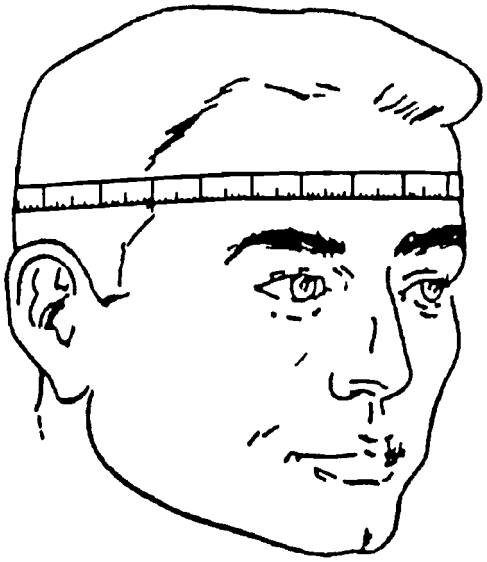

Step 1 - Para 4-34

4p34s1

Table 4-3. PRU-55/P and PRU-58/P Helmet Shell Assembly Sizing Guide

Circumference (Inches)	Comparable Hat Size	Shell and Liner Size Required	Part Number
21 - 22.5	7 or less	Medium	90A8045-1, or -7 (Note 1)
22.5 - 24	7 1/2	Large	90A8045-2, or -8 (Note 1)
24 - 24.9	7 7/8 or more	Extra-Large	90A8045-3, or -9 (Note 1)

Notes: 1. Part numbers ending with -1, -2, or -3 are single visor, PRU-55/P helmet shell assemblies. Part numbers ending with -7, -8, or -9 are PRU-58/P helmet shell assemblies are no longer available through supply.

NOTE

Sizing instructions are provided only as general guidance. Because of the wide variation in head shapes likely to be encountered, it is not possible to present detailed guidance. The helmet is designed to provide lightweight head protection and should fit close to the head. Therefore, the Aircrew Survival Equipmentman (PR/MOS 6060), using sound professional judgement, should in conjunction with the aircrewmember, select the size helmet that provides the safest, most stable and comfortable fit acceptable to the aircrewmember.

2. Once the correct size has been determined, requisition the helmet assembly through normal supply channels.

Section 4-3. Helmet Configuration Buildup

4-35. GENERAL.

4-36. The helmet shell assembly required for each helmet configuration varies according to aircraft mission and type visor assembly required. Table 4-3 along with the information in figures 4-2 and 4-3 will assist in indicating which part number for the required helmet shell assembly should be requisitioned from supply for the helmet assembly configuration buildup.

4-37. Once the basic helmet shell assembly and components are received, carefully inspect the shipping containers for evidence of damage or signs of abuse. Open each container and verify that all the required items have been included. If any parts are defective, damaged, or missing, replace all parts in the shipping container, prepare a Quality Deficiency Report (QDR), and notify the proper authority. Once the helmet shell assembly components have been accepted, it may be built up by adding or removing major components in order to obtain the desired helmet assembly configuration for the required application. This section, used in accordance with tables 4-1 and 4-2, provides enough information to build up the helmet assembly.

4-38. ASSEMBLY OF COMPONENTS.

4-39. ORDER OF ASSEMBLY. Refer to tables 4-4 through 4-7 for components and order of assembly required to build up the various helmet assembly configurations using either the PRU-55/P or the PRU-58/P helmet shell assembly. Fabricated components and parts shall be installed on the helmet shell assembly in accordance with and in the order shown in the appropriate tables.

NOTE

For clarification in determining the right and left side of the helmet assembly during buildup, assume the helmet to be donned by the aircrewmember and determine helmet sides relative to the aircrewmember's right and left sides.

Table 4-4. HGU-68(V)/P Assembly of Components

Order of Assembly	Component/Assembly to be Installed	Paragraph Reference
1	Installation of Reflective Tape	4-40
2	Installation of Helmet Plate Assembly, AN/AVS-9	4-44
3	Installation of Boom Microphone Assembly, Boom Swivel Assembly, M23595/1-2 (AM-3597C/A) Amplifier and Amp Mounting Bracket	4-45
4	Installation of Optional Cable Assemblies M22442/15-1 (CX-4832A/AR) or M22442/19-1 (CX-12972/AR) Cable Assembly	4-47
5	Installation of Thermoplastic Liner Assembly	4-49
6	Fitting of Helmet Components	4-50
7	Fitting of Thermoplastic Liner Assembly	4-51
8	Installation of Bayonet Receiver Assembly	4-53
9	Installation of CBR Receivers	4-54
10	Installation of Pile Tape	4-57

Table 4-5. HGU-85(V)1/P Assembly of Components

Order of Assembly	Component/Assembly to be Installed	Paragraph Reference
1	Installation of Reflective Tape	4-40
3	Installation of Thermoplastic Liner Assembly	4-49
4	Fitting of Helmet Components	4-50
5	Fitting of Thermoplastic Liner Assembly	4-51
6	Installation of Bayonet Receiver Assembly	4-53
7	Installation of CBR Receivers	4-54
8	Installation of Lightweight (Bungy) Visor	4-55
9	Installation of Single Visor Assembly (Optional)	4-56
10	Installation of Pile Tape	4-57

Table 4-6. HGU-87(V)/P22P-16 Assembly of Components

Order of Assembly	Component/Assembly to be Installed	Paragraph Reference
1	Installation of Reflective Tape	4-40
2	Installation of KMU-561/P22P-16 Helmet Bladder Assembly	4-41
3	Installation of Helmet Plate Assembly, AN/AVS-9	4-44
4	Installation of Thermoplastic Liner Assembly	4-49
5	Fitting Helmet Components	4-50
6	Fitting of Thermoplastic Liner Assembly	4-51
7	Installation of Bayonet Receiver Assembly	4-53
8	Installation of CBR Receivers	4-54
9	Installation of Lightweight (Bungy) Visor	4-55
10	Installation of Pile Tape	4-57

Table 4-7. HGU-89(V)/P22P-16 Assembly of Components

Order of Assembly	Component/Assembly to be Installed	Paragraph Reference
1	Installation of Reflective Tape	4-40
2	Installation of KMU-561/P22P-16 Helmet Bladder Assembly	4-41
3	Installation of Helmet Plate Assembly, AN/AVS-9	4-44
4	Installation of Thermoplastic Liner Assembly	4-49
5	Fitting of Helmet Components	4-50
6	Fitting of Thermoplastic Liner Assembly	4-51
7	Installation of Bayonet Receiver Assembly	4-53
8	Installation of CBR Receivers	4-54
9	Installation of Lightweight (Bungy) Visor	4-55
10	Installation of Single Visor Assembly (Optional)	4-56
11	Installation of Pile Tape	4-57

4-40. INSTALLATION OF REFLECTIVE TAPE ON HELMET SHELL ASSEMBLY. To install reflective tape on the helmet shell assembly proceed as follows:

Materials Required

Quantity	Description	Reference Number
As Required	Tape, Reflective, High Intensity, White, 3-Inch (Note 1)	NIIN 01-078-8660 3150-3X50YD
As Required	Tape, Reflective, White, CL 3	L-S-300 NIIN 00-100-2153
As Required	Tape, Reflective, Red, 1-Inch, CL 1	L-S-300 NIIN 00-949-7552
As Required	Tape, Reflective, Red, 3-Inch, CL 1	L-S-300 NIIN 00-949-7598
As Required	Tape, Reflective, Red, 6-Inch, CL 1	L-S-300 NIIN 00-951-8833
As Required	Tape, Reflective, Yellow, 1-Inch, CL 1	L-S-300 NIIN 00-753-3208
As Required	Tape, Reflective, Orange, 1-Inch, CL 1	L-S-300 NIIN 00-656-1494
As Required	Tape, Reflective, Orange, 2-Inch, CL 1	L-S-300 NIIN 00-656-1186

Notes: 1. High intensity grade white tape provides greatest overall reflectivity and is most favorable for visual detection. Submit requisitions for high intensity grade tape to routing identifier code ZNC.

1. Clean outside of helmet shell assembly with damp cloth and a mild cleaning agent to remove all traces of grease, salt, or foreign substances.

2. Remove all traces of cleaning agent with a clean damp cloth. Dry with a clean, dry cloth.

3. Examine all surfaces of the helmet shell assembly for obvious signs of cracks, soft portions, splits or other defects which would be cause for replacement of the item. Chipped paint shall not be cause for replacement of helmet shell assembly. Defective helmet shell assemblies shall be disassembled and replaced and damaged parts shall be disposed of in accordance with the proper directives. Undamaged parts shall be retained for replacement on other helmet shell assemblies.

CAUTION

Refurbishment of helmet shell assembly by other than removal or replacement of reflective tape is unauthorized.

4. Aviator helmet assemblies shall be taped in accordance with the provisions of OPNAVINST 3710.7 Series (General NATOPS) and any Type Commander Directives.

5. Remove protective backing from reflective tape and place in desired position on helmet shell assembly surface. Avoid excessive stretching, air bubbles, and wrinkles. To obtain maximum adhesion, apply firm pressure to tape. Strip overlap should be minimized.

NOTE

Use of a heat gun increases adhesion of the reflective tape.

CAUTION

Application of any type of coating on top of reflective tape is not authorized.

6. Document in accordance with OPNAVINST 4790.2 Series.

4-41. INSTALLATION OF THE KMU-561/P22P-16 HELMET BLADDER KIT. The helmet bladder is a principle component of the Navy Combat Edge A/P22P-16 Aircrew Protective Assembly. It works in conjunction with the CSU-20/P22P-16 Anti-g Lower Ensemble and CSU-21/P22P-16 Counter Pressure Vest. It inflates during high-g situations to counter the positive pressure provided by the NCE system to the oxygen mask, keeping the mask tight against the face, aiding in the reduction of oxygen blow-by. The KMU-561/P22P-16 Helmet Bladder is installed as follows:

Materials Required

Quantity	Description	Reference Number
1	Bladder Assembly	93C8611-1
3	Strap, Tiedown	MS3367-4-0
1	Bladder Inlet Connector Kit	92B8414-1
1	Cover, Bladder Inlet Connector	89C7667-1
As Required	Adhesive, RTV 102/732	MIL-A-46106 NIIN 00-877-9872
2	Screw, Panhead	MS1957-14B
2	Washer, Lock	MS35333-70

NOTE

The KMU-561/P22P-16 Bladder Kit Assembly is issued in one size only and contains all required material for installation.

1. Prepare helmet for bladder installation.

a. If installed, remove visor lens and TPL assembly.

b. Detach left hand earcup assembly from helmet shell earcup cavity pile fastener tape and position clear of work area.

2. Prepare KMU-561/P22P-16 helmet bladder for installation as follows:

a. Remove KMU-561/P22P-16 bladder from kit package and lay out flat on workbench with identification label upward and bladder oxygen inlet supply tube on the lower left (as worn) side. Record KMU-561/P22P-16 bladder serial number in accordance with OPNAVINST 4790.2 series manual.

b. With helmet upright on work bench, position bladder assembly into helmet shell interior centered against rear inner surface of the energy absorbing liner with the identification label visible. Ensure bladder lays flat against the energy absorbing liner and lower edge of bladder is even with and parallel to the nape area edgeroll of the helmet shell with bladder inlet supply tube oriented toward left helmet shell earcup cavity.

c. Maintaining centered position, lift lower edge of bladder upward to expose hook fastener tabs installed on energy absorbing liner. Using white chalk, lightly mark location for installation of mating pile fastener tabs on the underside of the bladder.

d. Remove bladder from helmet shell interior and place label side down on work bench. Remove backing from kit pressure sensitive pile fastener tabs and press firmly into place at marked locations on bladder.

e. Turn bladder over; determine center of bladder and mark using white chalk, on bottom edge bladder. Remove backing from kit pressure sensitive hook fastener tab, align center of tab with mark on bladder centerline, and install tab horizontally along bottom edge of bladder. Place bladder into helmet shell interior to verify proper fastener tab alignment and positioning.

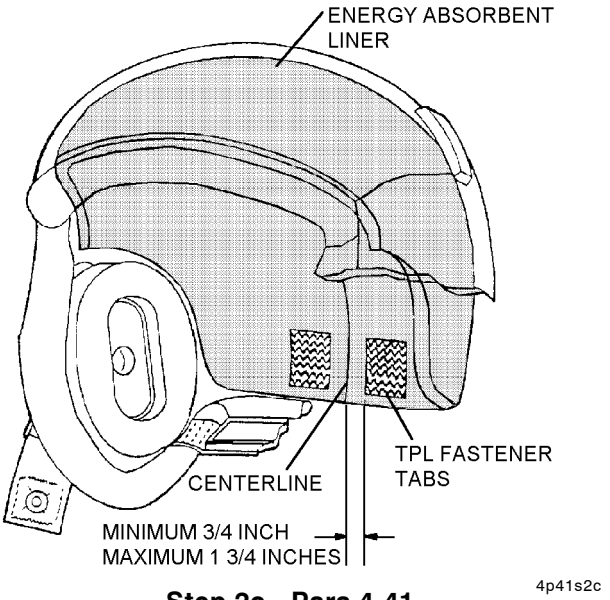

Step 2c - Para 4-41

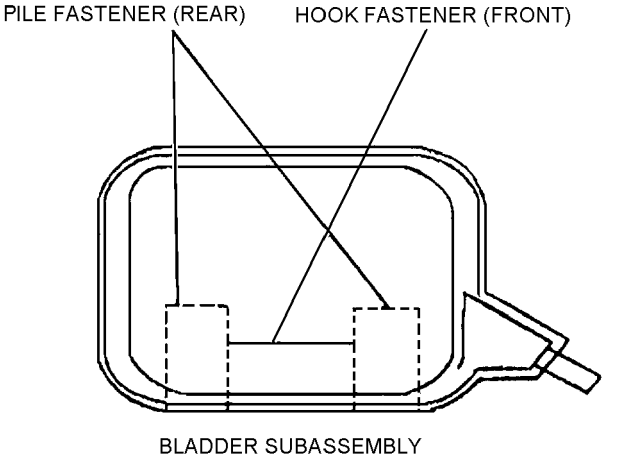

Steps 2d and 2e - Para 4-41

3. Install KMU-561/P22P-16 helmet bladder kit into the HGU-68(V)/P and HGU-85/P helmets as follows:

a. Detach visor cover attachment snap fastener stud from left side helmet shell earcup cavity exterior surface by loosening and removing the screw, lock washer and nut securing it in place and set aside for use during modification and subsequent reinstallation. From left interior earcup cavity, detach pile fastener material from inner surface of helmet shell and position clear of work area.

b. At the left rear integrated chin/nape strap attaching point on the helmet shell exterior, remove pan head screw, washer and underlying flanged nut and lock washer securing left nape strap and nape pad strap to helmet shell interior. Detach flanged nut and lock washer from grommets on end of left rear nape strap and nape pad strap, set aside, along with pan head screw and flat washer, for use during modification and subsequent reinstallation.

NOTE

To facilitate modification, template alignment holes A and B shall be cut out using the appropriate size cutter of a rotary (star) punch.

c. From kit package, select the template matching the size of the helmet being modified, cut out alignment holes A and B.

d. From interior of helmet, using flanged nut and lock washer removed in step b., pass the post of the flanged nut through left rear integrated chin/nape attachment hole, to helmet shell exterior. With the crosshatches for screw hole locators C and D oriented towards the front of the helmet, position hole B of the template over the post of the flanged nut, aligning hole A over visor cover snap fastener hole. Secure template in place by installing the visor cover screw and nut through hole A of the template and the nape strap pan head screw and flat washer through hole B into the post of the flanged nut.

e. Using a No. 2 medium lead pencil, draw outline of the bladder inlet supply tube pass through hole E onto helmet shell exterior surface. At screw locator holes C, D and installation tab locator hole F, mark the center of each crosshatch onto helmet using a center punch. Determine center of hole E outline and mark. With a center punch, mark the center of each half of hole E.

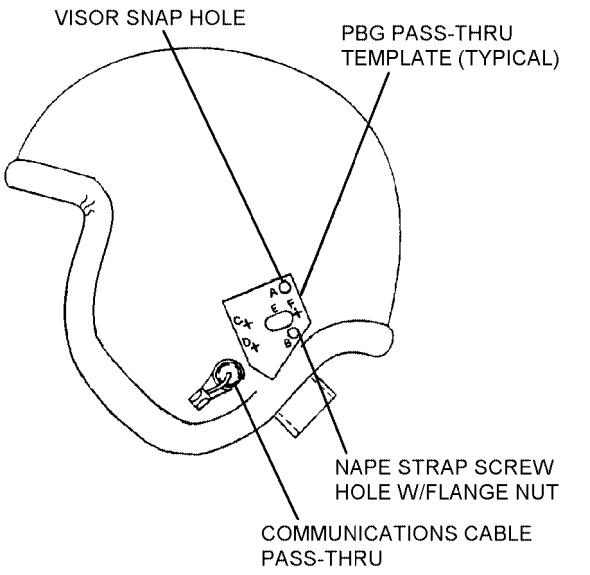

Steps 3d and 3e - Para 4-41

f. Loosen and remove hardware attaching template to helmet shell, remove template and set aside hardware for reinstallation.

CAUTION

Failure to ensure that nape strap, communications cord and earcup are clear of area to be drilled will result in damage to equipment.

Failure to ensure earcup cavity pile fastener is clear of area to be drilled will result in pile fabric becoming entangled in drill bit.

g. At marked locations C, D and F, using a No. 25 (0.149) drill bit, drill through helmet shell and deburr holes.

NOTE

Do not enlarge hole E any wider than necessary to permit passage through the helmet shell of the male portion of the inlet connector bladder quick disconnect and the bladder supply inlet hose.

h. At center mark of hole E outline, using a No. 1 (0.228) drill bit, drill a pilot hole. Enlarge and elongate hole E with a round file or a rotary tool kit (Dremel Tool), using the template hole E outline as a guide. Remove bladder inlet quick disconnect from kit package and use it to verify proper size and shape of the hole, using the male portion of the bladder inlet quick disconnect connector. Deburr all edges of the hole.

NOTE

Prior to assembly, apply a small amount of RTV to the first few threads of the screw.

i. Reinstall visor cover snap fastener stud onto helmet shell exterior using screw, lock washer and nut removed during step 3.f.

j. Remove bladder inlet connector quick disconnect cover from kit package. Align the cover over hole E, with the two screw tabs of the cover oriented toward the forward edge of helmet shell earcup cavity. Attach rear portion of the cover to the helmet shell exterior by inserting the trailing end installation tab through hole F to the helmet shell interior. From inside the helmet, pull on trailing end of tab while pushing on the rear outside end of the cover to seat the groove of the installation tab between the interior and exterior surfaces of hole F. With installation tab fully seated, cut trailing end off tab and rotate cover toward rear of helmet to permit unrestricted access to hole E.

k. Insert bladder into helmet shell interior and attach it to the hook fastener tabs on the energy absorbing liner. Ensure the bladder lies smoothly across the surface of the liner and is correctly aligned with the nape edgeroll and that the bladder inlet supply tube is oriented toward the left helmet shell earcup cavity.

l. Remove plug from the bladder inlet supply tube and pull the supply tube out of the helmet shell interior through hole E. Fit inlet supply tube over the male portion of the inlet connector quick disconnect. Place the quick disconnect flush against the helmet shell exterior, with threaded inserts of disconnect over holes C and D, to ensure there is no twisting of bladder or bladder inlet supply tube when quick disconnect is properly positioned for installation.

m. Using tiedown strap supplied in kit and strap tensioning tool set at minimum tension (3), secure inlet supply tube to male portion of the bladder quick disconnect with the head of the tiedown strap positioned on the underside of the male portion of the quick disconnect.

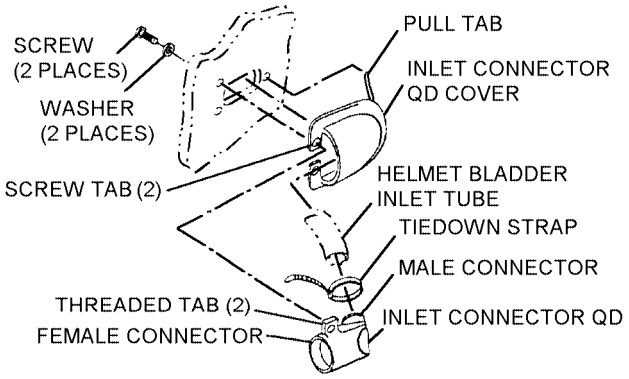

4p41s3j

Steps 3j thru 3m - Para 4-41

NOTE

Prior to assembly, apply a small amount of RTV to the first few threads of each screw.

n. Rotate the bladder inlet connector forward over the bladder inlet connector. Arrange the screw tabs of the cover over holes C and D on helmet and under threaded inserts of the bladder inlet connector quick disconnect tabs. While maintaining alignment, from inside of helmet, attach connector and cover to helmet shell exterior by installing screws and lock washers through helmet shell; cover screw tabs into the threaded inserts of the inlet connector quick disconnect tabs. Securely tighten screws.

NOTE

Upon completion of bladder installation procedures, perform bladder leakage test in accordance with paragraphs 4-68 through 4-71.

o. Reattach left hand integrated chin/nape assembly to rear of helmet shell using screw, flat washer, lock washer and flanged nut removed in step 3.f. Using adhesive, reattach pile fastener material detached in step 3.a. Reinstall left hand earcup assembly removed in step 1.

p. Install visors Part Number P/N 90D7972-4 or 90D7972-5 in accordance with instructions contained in paragraph 4-83. Helmets intended for use with Night Vision Image Intensifier Sets will be configured with visors P/N 89D7697-1 or 89D7697-2, installed in accordance with instructions contained in, paragraph 4-55.

q. Contact aircrewmember to continue fitting of helmet in accordance with paragraph 4-48.

4. Document in accordance with OPNAVINST 4790.2 Series.

4-42. Deleted.

4-43. Deleted.

4-44. INSTALLATION OF AN/AVS-9(V), DETACHABLE HELMET MOUNTING PLATE ASSEMBLY, P/N 264317-3. The Detachable Helmet Mounting Plate Assembly provides the means to attach the AN/AVS-9(V) NVIIS to the aircrew protective helmet. Detachable mounting plate, P/N 264317-3, replaces currently installed helmet plate, P/N 00-067-01, on all TACAIR fixed wing helmet assemblies.

Materials Required

Quantity	Description	Reference Number
1	Helmet Mounting Plate Assembly (extended travel)	264317-3
1	Bracket Kit, Helmet	265030-3
1	Hex Key Set	GGG-K-275
As Required	Tape, Masking, 1-Inch	NIIN 00-283-0612
As Required	Tape, Pressure Sensitive, 1-Inch	NIIN 00-074-5124
As Required	Adhesive, RTV 102/732	MIL-A-46106 NIIN 00-877-9872
1	Lightweight Visor, Clear (MBU-23/P, -24/P trim)	89D7697-1 NIIN 01-319-8962
	-or-	
1	Lightweight Visor, Neutral (MBU-23/P, -24/P trim)	89D7697-2 NIIN 01-319-8961
	-or-	
1	Lightweight Visor, Clear (MBU-12/P trim)	81D5189-3 NIIN 01-143-2088
	-or-	

Materials Required (Cont)

Quantity	Description	Reference Number
1	Lightweight Visor, Neutral (MBU-12/P trim)	81D5189-4 NIIN 01-141-5917
	-or-	
1	Lens (MBU-23/P trim) (600 Knt)	90D7972-4 NIIN 01-439-2339
	-or-	
1	Lens (MBU-24/P trim) (600 Knt)	90D7972-5 NIIN 01-439-2347

NOTE

The Bracket Kit P/N 265030-3 contains required hardware to attach the P/N 264317-3 helmet mounting plate to the selected helmet; four #6-32 hex head screws, four lock washers, left hand mounting bracket (thick concave bracket), right hand mounting bracket (thin concave bracket) and two interior backing plates.

Ensure aircrewmember has a properly fit helmet assembly prior to installing mounting plate.

1. Removal of installed MXU-810/U mounting plate.

a. For HGU-66/P, HGU-85(V)/P, and HGU-89(V)/P helmets:

(1) Unsnap and remove visor and position clear of work area for reinstallation.

(2) Detach existing MXU-810/U NVIIS helmet plate by removing the three screws and flat washers along with fabric cover from the underlying T-nuts. Proceed to step 1c.

THIS PAGE INTENTIONALLY LEFT BLANK.

b. For HGU-68(V)/P helmets:

(1) Lower visor to expose visor locking guide locking plate.

(2) Lift locking plate tab and slide to open position to expose rounded hole in locking guide slot.

(3) Raise visor to full up position placing visor lock knob in the rounded hole of locking guide slot.

(4) Rotate visor lock knob 1/4 turn clockwise to disengage locking key from visor locking guide slot and remove lock knob.

(5) Remove visor by sliding aft until clear of tracks.

(6) Detach visor locking guide by removing six attaching screws.

(7) Detach left and right visor tracks and all external components by removing six attaching screws.

c. Detach earcup assemblies from pile fastener tape on helmet shell interior and position clear of work area.

d. Remove the screws and flat washers from the underlying lock washers and flanged nuts securing the chin/nape strap to the rear of the helmet. Reassemble removed components on grommeted ends of chin/nape strap to prevent twisting or position shift during maintenance.

e. For HGU-66/P helmets:

(1) Position helmet inverted on work bench with the helmet brow closest to technician.

(2) Grasp two fabric liner release loops on rear half of custom fit liner, apply inward and upward pressure on loops, maintain pressure and move liner up and out of rear of helmet shell.

(3) Slide front half of custom liner toward rear of helmet shell and remove, set both halves aside for reinstallation. Proceed to step 1g.

CAUTION

The energy absorbing liner is easily damaged, use extreme care during removal and handling procedures.

NOTE

Prior to removal of the energy absorbing liner, mark the centerline of the liner and the helmet shell edgeroll at the brow and nape to ensure correct re-positioning of the liner during replacement.

f. For HGU-68(V)/P, HGU-85(V)/P, and HGU-89(V)/P helmets:

(1) Position helmet inverted on work bench with brow of helmet closest to technician.

(2) Insert a thin flexible metal spatula (a 12-inch x 1-inch metal ruler may be used) between inner surface of helmet shell and energy absorbing liner at the center rear of the helmet, apply inward and upward pressure on liner, until there is enough clearance to grasp energy absorbing liner with free hand.

(3) Rotate liner approximately 90 degrees left or right to clear earcup cavity edgeroll and permit complete withdrawal from helmet shell.

(4) Maintain inward and upward pressure on liner and continue to move it up and out of helmet shell.

g. For HGU-66/P, HGU-85(V)/P, and HGU-89(V)/P helmets:

(1) Invert helmet and place 1 inch x 1 inch squares of pressure sensitive tape on the three T-nuts and underlying lock washers securing the MXU-810/U helmet plate on the helmet shell interior surface.

(2) Place helmet upright on work bench with front of helmet closest to technician.

(3) Detach MXU-810/U helmet plate from helmet shell exterior by removing the three screws and flat washers along with fabric cover from the underlying lock washers and T-nuts.

2. Installation of AN/AVS-9(V) helmet mounting plate.

a. Place helmet upright on work bench with the front of helmet closest to technician.

b. Adjust helmet mounting plate left hand latching screw counterclockwise until lower end of screw is flush with the inner end of the integral threaded cylindrical nut, with the locking nut loosened.

c. Position helmet mounting plate across brow of helmet, with helmet plate lower edge extension resting level across the upper edge of helmet shell brow edgeroll.

d. Align mounting plate centering arrow with center of upper MXU-810/U helmet plate attaching slot.

e. Visually verify alignment of helmet mounting plate centering arrow with upper attaching slot and that the lower edge extension is resting on the upper edge of the helmet shell edgeroll. Hold mounting plate firmly in place on helmet brow and tape in place with masking tape applied to the mounting plate and helmet shell on the left and right side of the goggle mount.

f. Position helmet with left hand side to technician.

g. Lift overcenter latch and insert head of latching screw into the center cut-out of the left hand mounting bracket (thick concave bracket). Close overcenter latch, ensuring head of latching screw remains centered in left hand bracket cut-out.

h. Position concave surface of left mounting bracket flush with surface of helmet shell, with head of latching screw centered in cut-out, inner edge of mounting bracket parallel to the left edge of the helmet mounting plate.

i. While holding bracket in place, outline mounting bracket position on exterior helmet shell surface. Place a mark at the center of the upper and lower slots to indicate location of drilling points for attaching screws.

NOTE

The right hand mounting bracket features two latching notches, one deep notch and one shallow notch, with four attaching screw slots. These features are incorporated to permit minor adjustments to the helmet mounting plate assembly's position on the helmet shell exterior surface to individualize goggle placement to optimize eye relief and interpupillary distance adjustments for the aircrewmember.

j. Position right hand side of helmet toward technician.

k. Position right hand mounting bracket with shallow latching notch down and away from front center of helmet under latching hook. Engage right hand helmet mounting plate latching hook into bracket notch.

l. With firm downward pressure on hook, position concave surface right hand mounting bracket flush with exterior surface of helmet shell.

m. With shallow locking notch down and away from center of helmet and inner edge of mounting bracket parallel with right edge of helmet mounting plate, hold bracket in place and outline bracket position on exterior helmet surface. Place a mark at the center of the upper and lower attaching slots, closest to the shallow locking notch, to indicate location of drilling points for attaching screws.

n. Remove masking tape from helmet shell and mounting plate, set mounting plate aside clear of work area.

o. At each of the two marked locations on each side of the helmet, using a No. 33 (0.113) drill bit, drill a small pilot hole. Using a No. 16 drill bit, enlarge each pilot hole to finished 0.177 dimension.

NOTE

Apply a small amount of RTV to the first few threads of attaching screws of the left hand mounting bracket prior to installation. Application of RTV to the right hand mounting bracket attaching screws will be accomplished after final goggle fit and alignment check.

p. Position backing plate, with flat surface of backing plate toward interior surface of left hand side of helmet align built in nuts with two drilled left hand bracket holes.

q. On the left side exterior, position left hand bracket, with center cut-out toward top of the helmet, over drilled holes. Secure in place using a 5/64-inch hex head key and two screws and lock washers.

r. Repeat procedure for installation on right hand bracket, ensuring the center notch is down and away from top of helmet.

s. Engage the right hand latching hook into the notch of the right hand mounting bracket.

t. Fit the left hand latching screw into the center cut-out of the left hand mounting bracket and close the overcenter latch. If helmet mounting plate assembly is loose, adjust left hand latching screw to provide the desired tension, ensuring the helmet mounting plate assembly is centered on helmet when the overcenter latch is closed. Once desired tension is achieved, tighten lock nut to maintain proper position of latching screw.

u. For HGU-66/P helmet:

(1) Invert helmet on work bench with brow positioned closest to technician.

(2) From rear of helmet, ensuring liner half remains centered within the helmet shell interior, insert front half of custom fit liner firmly against helmet shell brow edgeroll.

(3) Insert back half of custom fit liner, with fabric release loops positioned to the right and left side, ensuring the liner half remains centered within the helmet shell interior, into rear of helmet and push into place.

(4) Using screws, flat washers, locking washers and flanged nuts, install grometted ends of chin/nape strap to rear attaching points on helmet shell.

(5) Attach earcups to pile fastener fabric on interior of helmet shell earcup cavity.

v. For HGU-68(V)/P, HGU-85(V)/P, and HGU-89(V)/P helmets: Reinstall internal components in accordance with paragraph 4-86.

NOTE

During the crewmember goggle fit process, if difficulty is experienced in obtaining proper eye relief or interpupillary distance using installed goggle adjustments, minor adjustments to the position of the helmet mounting plate assembly may be accomplished by means of attaching slot selection. To adjust position of helmet mounting plate assembly slightly to the right (as worn), place screws in the inboard attaching slots. To adjust position of helmet mounting plate assembly slightly to the left (as worn), install the mounting bracket with the deep notch down and away from the center of the helmet, using the attaching slots closest to the deep notch.

w. Contact aircrewmember to schedule for a goggle fit, adjustment and alignment period.

NOTE

Aircrewmembers transferring to activities not involved in operational/training flights requiring the use of Night Vision Image Intensifier Sets (NVIIS) shall have their flight helmets returned to the HGU-68(V)/P configuration to preserve squadron NVIIS integration assets.

x. Document in accordance with OPNAVINST 4790.2 series.

4-45. INSTALLATION OF BOOM MICROPHONE ASSEMBLY, BOOM SWIVEL ASSEMBLY, M23595/1-2 (AM-3597C/A) AMPLIFIER, AND AMP MOUNTING BRACKET. To install the boom microphone assembly, boom swivel assembly, amplifier, and amp mounting bracket, select boom microphone assembly with correct length CX-4434/U extension cable for operational requirements and proceed as follows:

Materials Required

Quantity	Description	Reference Number
1	Boom Microphone Assembly (Note 1)	M-33A/AIC NIIN 00-755-4643
1	Boom Microphone Assembly (Note 2)	M26542/2-01 NIIN 01-188-8529
1	Boom Microphone Assembly (Note 3)	M26542/2-02 NIIN 01-188-8530
1	Boom Microphone Assembly (Note 4)	M26542/2-03 NIIN 01-188-8528
1	Swivel Assembly, Boom Microphone	765AS300-1 NIIN 01-099-8634
1	Amplifier, AM-3597C/A	M23595/1-2 NIIN 00-100-4932
1	Amp Mounting Bracket	80B4881 (CAGE 97427) NIIN 01-128-5334
As Required	Adhesive, Polychloroprene, Class 3	MIL-A-5540 NIIN 00-515-2246
As Required	Adhesive, RTV 102/732	MIL-A-46106 NIIN 00-877-9872

Materials Required (Cont)

Notes: 1. The M-33A/AIC Boom Microphone Assembly is an M-87/AIC microphone supplied with a 6-inch CX-4434/U extension cable.

2. The M26542/2-01 Boom Microphone Assembly is an M-87/AIC microphone supplied with a 13-inch CX-4434/U extension cable.

3. The M26542/2-02 Boom Microphone Assembly is an M-87/AIC microphone supplied with a 16-inch CX-4434/U extension cable.

4. The M26542/2-03 Boom Microphone Assembly is an M-87/AIC microphone supplied with a 23-inch CX-4434/U extension cable.

NOTE

Location for installation of the boom swivel assembly and boom microphone is on the left hand side of the PRU-55/P helmet shell assembly.

1. Install boom swivel assembly and boom microphone assembly as follows:

a. Detach left hand earcup assembly from pile fastener material on interior of left helmet shell earcup cavity and position clear of work area.

NOTE

Line drawn in the following step is used as a reference by the installing technician to establish the location for the installation of the boom swivel assembly. It may also be used as an aid to locate the best position for the location of the amplifier mounting bracket hole.

b. Using a no. 2 medium lead pencil, draw a straight line across the exterior surface of the left helmet shell earcup cavity, from the center of the chin strap exit grommet to the center of the left nape strap attaching screw.

NOTE

Dimensions given are not critical. They are provided to the installing technician as an aid in selecting the location of the boom swivel mounting hole. Assure sufficient clearance for installation of the oxygen mask jaw receiver is provided during mounting site selection.

c. Locate position, using above stated criteria as a guideline, for boom swivel assembly installation and place a mark.

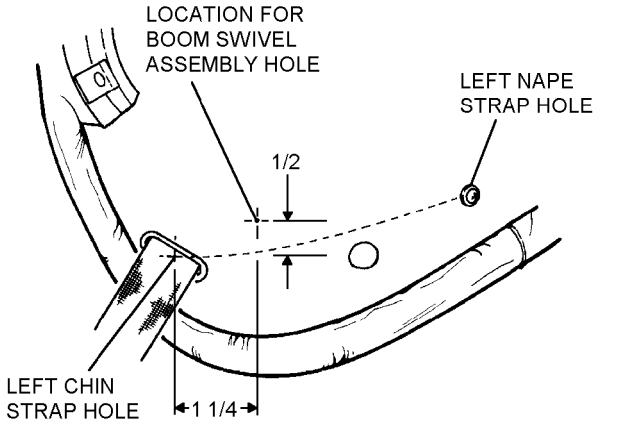

4p45s1b

Steps 1b and 1c - Para 4-45

d. Detach pile fastener material from interior surface of helmet shell earcup cavity and position clear of work area.

e. At marked location on helmet shell exterior, using a 0.228-inch bit, with drill bit perpendicular to helmet surface, drill the boom swivel mounting hole.

f. Elongate hole to 0.320-inch, using a rattail file. Deburr hole.

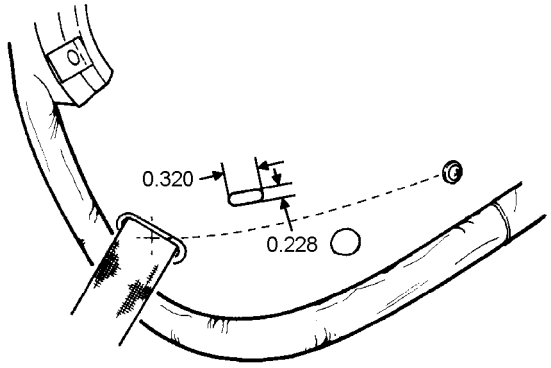

4p45s1f

Step 1f - Para 4-45

g. Install boom microphone swivel assembly by securing swivel shaft (with attached parts) to helmet using pan head screw and washer.

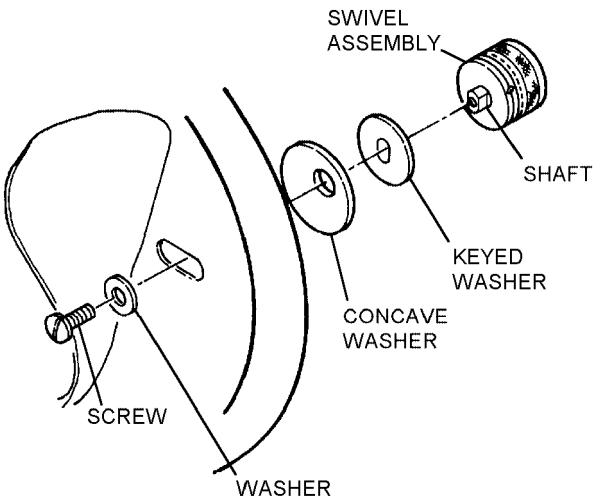

Step 1g - Para 4-45

h. Remove pan head screw, knurled nut, serrated washer, and outer half of boom adapter from shaft.

i. Align boom microphone support bracket legs into grooves of the inner boom swivel, boom adapter.

j. Position outer boom adapter over support bracket legs and install serrated washer, knurled nut and pan head screw then tighten.

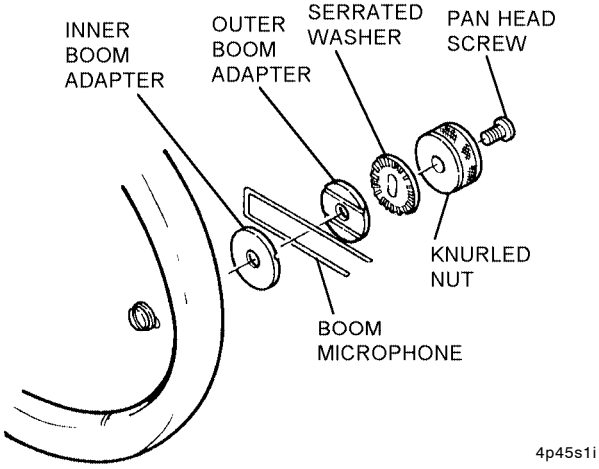

Step 1i and 1j - Para 4-45

k. If the CX-4434/U cable assembly has been removed from boom microphone assembly, loosen setscrews on microphone, install plug of CX-4434/U cable assembly and tighten setscrews.

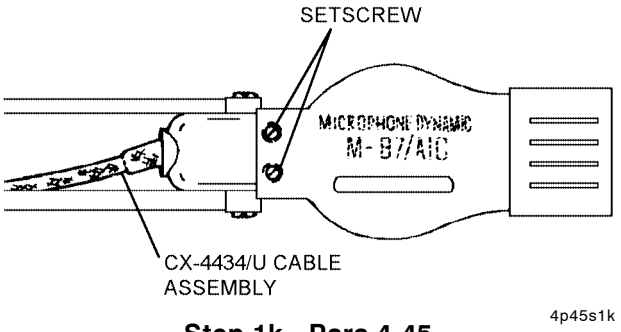

Step 1k - Para 4-45

2. For communications systems requiring the use of the M23595/1-2 (AM-3597C/A) amplifier, proceed as follows:

NOTE

Dimensions given are not critical. They are provided to the installing technician as an aid in selecting the location of the amplifier mounting bracket hole. Assure sufficient clearance for boom microphone operation and adjustment is provided during mounting site selection.

a. Locate position, using above stated criteria as a guideline, for amplifier mounting bracket installation and place a mark.

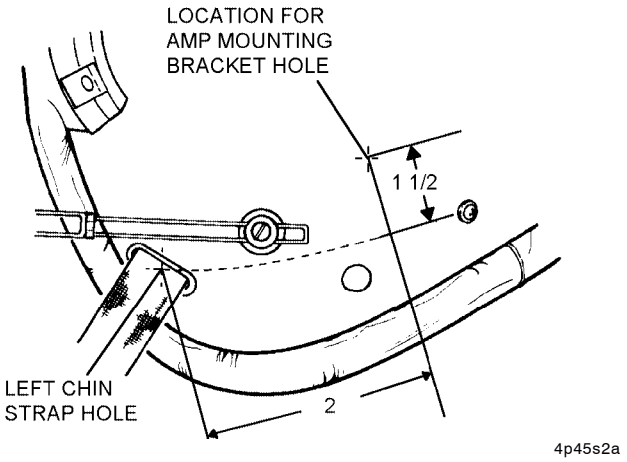

Step 2a - Para 4-45

b. At marked location on helmet shell exterior, using a 0.228-inch bit, with drill bit perpendicular to helmet surface, drill the amplifier mounting bracket hole.

NOTE

A small amount of RTV may be applied to the first few threads of screws prior to installation.

c. Attach amplifier mounting bracket to helmet shell exterior with the 8-32 x 1/4-inch screw, flat washer and post. Do not tighten screw.

d. Connect amplifier to boom microphone CX-4434/U cable assembly U-173/U connector pins.

e. Insert MIL-A-23595/1 (AM-3597C/A) amplifier in mounting bracket, insert amplifier connector pins into junction block of M22442/15-1 or M22442/19-1 communication cable assembly and tighten mounting bracket screw.

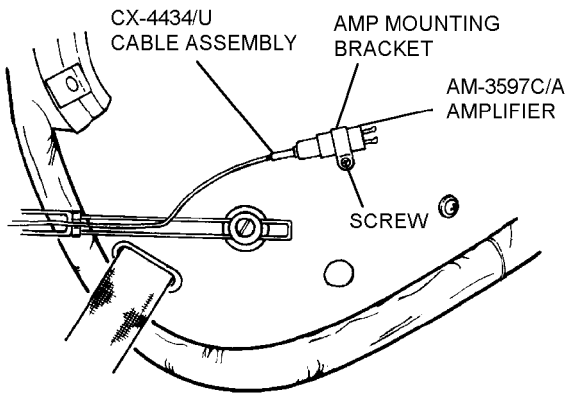

4p45s2e

Step 2e - Para 4-45

3. Re-cement pile fastener material to inner surface of helmet shell earcup cavity using adhesive and reattach left hand earcup assembly to pile fastener material.

4-46. DELETED.

4-47. INSTALLATION OF M22442/15-1 (CX-4832A/AR) CABLE ASSEMBLY OR M22442/19-1 (CX-12972/AR) CABLE ASSEMBLY. To install the M22442/15-1 (CX-4832A/AR) cable assembly or the M22442/19-1 (CX-12972/AR) cable assembly, proceed as follows:

Materials Required

Quantity	Description	Reference Number
1	Cable Assembly, CX-4832A/AR	M22442/15-1 NIIN 00-961-8516
	-or-	
1	Cable Assembly, CX-12972/AR	M22442/19-1 NIIN 01-016-4130
1	Cable Assembly, CX-4831/AR (Note 1)	M22442/14-1 NIIN 00-631-8566
2	Screw, 6-32 x 1/4 Inch	MS51957-25 NIIN 00-054-6649
2	Washer	MS35338-138 NIIN 00-933-8120
1	Earphones	H-87B/U NIIN 01-056-7225
As Required	Adhesive, Polychloroprene, Class 3	MIL-A-5540 NIIN 00-515-2246
As Required	Adhesive, RTV 102/732	MIL-A-46106 NIIN 00-877-9872

Notes: 1. Use Cable Assembly M22442/14-1 attached to the teardrop fitting of Cable Assembly M22442/15-1 to connect to aircraft audio system.

1. Remove factory installed communications cable as follows:

a. Disconnect cable from earphones in accordance with paragraph 4-81, steps 2.a. thru 2.g.

b. Remove MK-634/AIC cable clip from outside of helmet, if installed.

c. Pressing inward on rubber grommet encircling installed M22442/37-4708 cable to dislodge grommet from factory drilled hole and remove cable assembly.

NOTE

If the installing technician does not consider the factory drilled cable exit hole to be the best location for new cable installation, repair existing hole in accordance with paragraph 4-101 and redrill cable exit hole as indicated in the following instructions.

Dimensions are not critical. Adjust position to obtain optimum fit.

2. Drill mounting holes for cable assembly as follows:

a. Fabricate a template from the illustration below.

NOTE

Illustration below is to scale. A copy may be used as the template.

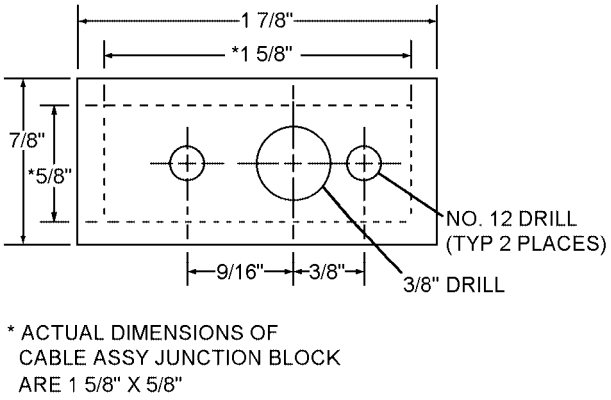

4p47s2a

Step 2a - Para 4-47

b. Select a drilling location on the left side of the helmet. Selected location should not interfere with boom microphone installation or operation and should permit the junction block of the cable assembly to lie flush on helmet shell exterior. Orientation (horizontal, vertical, or angled) is at the discretion of the installing technician, based on above listed criteria. Using template, mark location of all holes to be drilled.

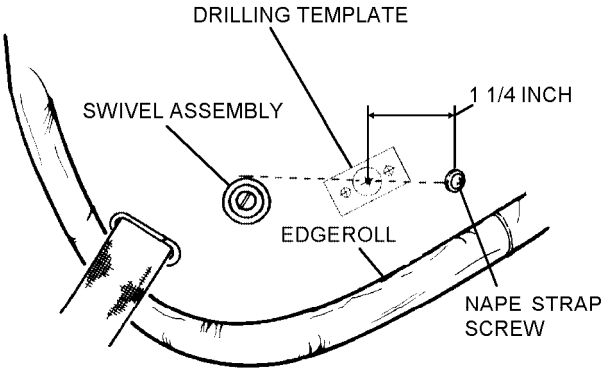

4p47s2b

Step 2b - Para 4-47

c. Pull pile fastener fabric from the inside of the helmet, away from the drilling position.

d. If not using the factory drilled hole, at marked location on helmet shell exterior, using a 3/8-inch bit, with drill bit perpendicular to helmet surface, drill center cable pass through hole.

e. At marked location on helmet shell exterior, using a No. 12 (0.189 inch) bit, with drill bit perpendicular to helmet surface, drill the two mounting screw holes.

f. After making an access slit for earphone leads and junction block mounting screw pass through, re-cement pile fastener material to the interior surface of the helmet shell earcup cavities.

3. Install cable assembly as follows:

a. Pass the four cable assembly earphone leads, with electrical contacts, through the 3/8-inch center hole drilled on the left side of the helmet shell assembly, to helmet shell interior.

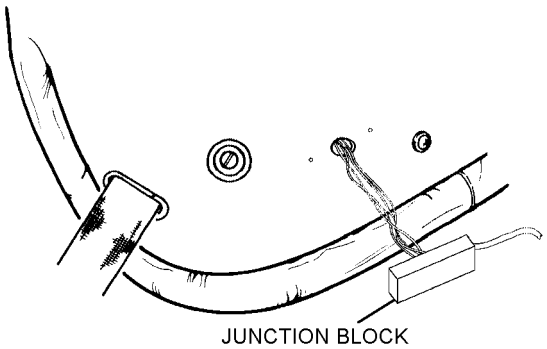

4p47s3a

Step 3a - Para 4-47

CAUTION

Do not over torque 6-32 x 1/4-inch screws. Over torquing will cause damage to the cable assembly junction block.

NOTE

A small amount of RTV may be applied to the first few threads of screws prior to installation.

b. Secure cable assembly junction block to outside of helmet, using two 6-32 x 1/4-inch screws and two 0.032-inch thick flat washers. Apply no more than 4 in-lbs. of torque to 6-32 x 1/4-inch screws.

4. Install earphones and earcup assemblies in accordance with paragraph 4-81, step 3.a. thru 3.g.

4-48. HELMET FITTING PROCEDURES. The following text contains instructions for fitting the helmet to the aircrewmember. These procedures include earcup positioning, chin/nape strap adjustment and tensioning, visor assembly tension adjustment and tacking, TPL layer removal, and TPL custom-fitting (heat forming, if necessary). Proper fitting is essential for helmet stability and aircrew comfort, as well as ensuring that the NVIIS accessories can be properly positioned.

NOTE

As an additional aid in achieving safe, comfortable fit the use of the skull cap is authorized. The skull caps also absorb perspiration and when worn, assist in proper positioning of the helmet during donning by protecting the aircrewmember's ears. They are available through normal supply channels under P/N 765AS270-101 (size medium), NIIN 01-077-8909 or P/N 765AS271-101 (size large), NIIN 01-077-8910.

4-49. Installation of TPL Assembly. To install the TPL assembly to the helmet assembly, proceed as follows:

Materials Required

Quantity	Description	Reference Number
As Required	Tape, Pressure Sensitive Adhesive	A-A-1243 NIIN 00-782-6220

1. If four 1-inch x 2-inch pressure-sensitive hook fastener tabs are not present on the inside surface of the energy absorbing liner, installation is required.

a. Install two tabs on the inside front of the energy absorbing liner left and right of center over the eyes, 1/8 inch from front edge of the liner.

b. Install two tabs in the rear approximately 1 1/2 inch left and right of center and 1/2 inch from the bottom edge of the liner.

2. To prevent bunching of TPL cover fabric, secure the TPL cover to the preformed layer assembly using four 1-inch x 2-inch pieces of double-sided tape.

a. Position the cloth cover over the preformed layer assembly. The single seam is positioned to the rear.

b. Position tape strips with the 2-inch length horizontal at the front, rear, and both sides of the preformed layer assembly under the cover fabric overlap.

c. Press cover into place over the tape strips.

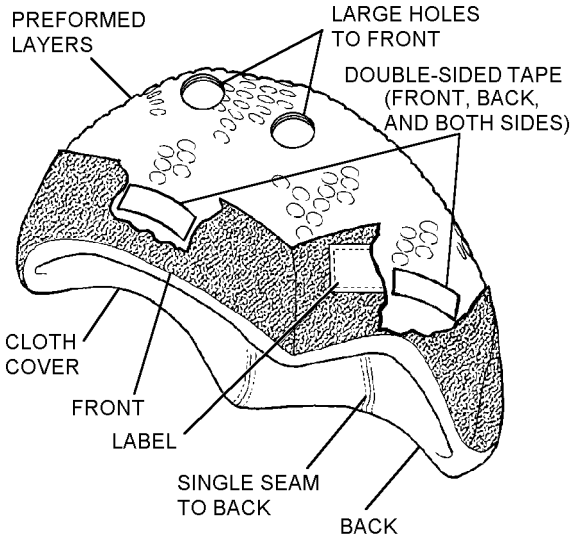

4p49s2a

Step 2a thru 2c - Para 4-49

3. Place the TPL inside the helmet shell by squeezing the TPL sides together to clear the earcups. Ensure that large holes on top of the TPL are facing forward. Release TPL and attach liner cover to hook fastener tabs.

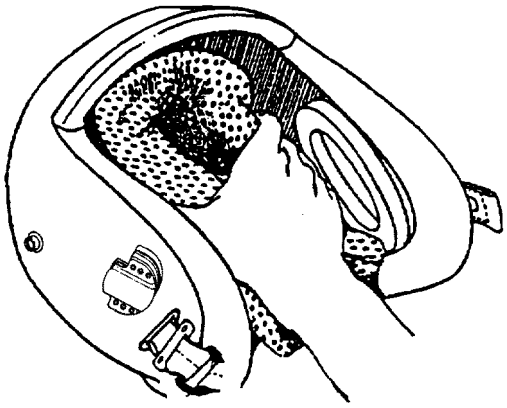

4p49s3

Step 3 - Para 4-49

4. Ensure that the front edge of the TPL is aligned with the front edge of the energy-absorbing liner inside the helmet and that the TPL is centered in the helmet.

4-50. Helmet Component Adjustments.

1. Have the aircrewmember don the helmet as follows:

CAUTION

Spread helmet only enough to allow ease of donning and doffing. Excessive spreading may damage helmet.

a. Hook thumbs in earcups and spread helmet slightly.

b. Place edgeroll on helmet brow against forehead.

c. Rotate helmet toward the rear and down onto head.

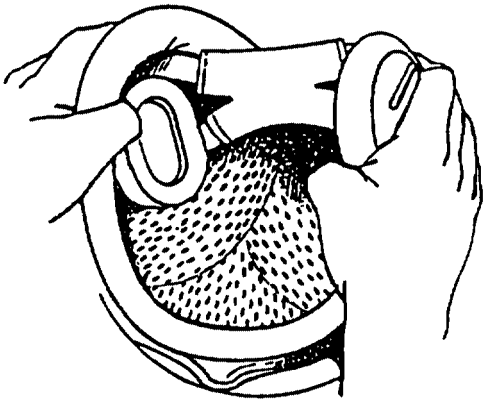

4p50s1a

Steps 1a thru 1c - Para 4-50

NOTE

The edgeroll on the helmet brow should be positioned just out of the aircrewmember's line of sight as the aircrewmember looks upward.

2. Rotate the helmet toward the rear until the edge-roll on the brow is out of the field-of-view.

3. Check earcup assembly position, ensuring that the earpads completely cover the ears.

NOTE

For optimum sound attenuation and comfort, the earseals should be compressed to about half of their original thickness.

Earcup spacer pads can be used whole, cut into quarters, or cut in half lengthwise or crosswise.

If unable to achieve a proper fit after installation of spacer pads, the tapered crushable earcups may be inverted within the earpads and the earpad assemblies may be switched from right to left/left to right as additional aids in achieving a safe, comfortable fit. Other fitting options include: removal of the earpads and installation of the Oregon Aero Softseal earseals onto the tapered earcups, use of P/N 765AS230-102 earcup set, or installation of the Oregon Aero Hush Kit in place of the earcup assembly.

4. Check earpad compression. If necessary, adjust compression by adding spacer pads.

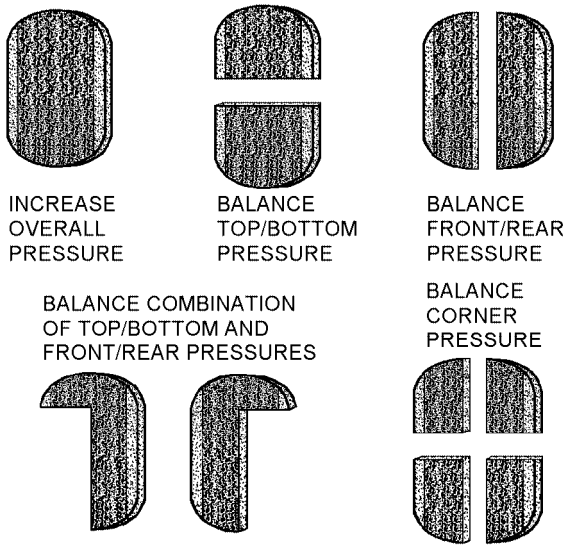

4p50s4

Step 4 - Para 4-50

NOTE

Use of clamps is optional.

Due to anatomical variations (e.g. unusual head breadth, thick/muscular neck) some aircrewmembers will be unable to don the helmet with the barrel clamps installed. In these instances removal of the clamps from the integrated chin/nape strap is authorized.

5. Loosen clamp screws, and slide clamps down as far as possible on the nape strap. Adjust the nape straps for a snug fit. Slide the clamps upward until they contact the shell, and tighten the screws. Clamps will now hold adjusted nape straps in place.

6. Tighten the chin strap to the desired tension. Once the desired tension is attained, the chin strap can be fastened and unfastened via the snap fastener and stud on opposite end of the chin strap.

7. After a trial wearing period of approximately 30 minutes, have the aircrewmember evaluate the helmet fit. If the aircrewmember is satisfied with the fit, proceed with helmet build-up. If the helmet does not fit properly, (i.e. pressure points exist, the helmet is too tight or sits high on aircrewmembers head, or aircrewmember complains of hot spots) have aircrewmember describe and point out areas where the problem is located. Take note of the location, size and shape of any exposed skin areas that appear irritated (red coloration or grooves in soft tissue of the scalp). To correct these fit problems, follow paragraph 4-51 procedures for fitting the TPL assembly.

4-51. Fitting the TPL Assembly. To fit the TPL assembly to the aircrewmembers, proceed as follows:

NOTE

Remove layers from the outside of the TPL assembly to lower the helmet onto the aircrewmember's head without changing the fit. Remove layers from the inside of the TPL assembly to relieve pressure and to optimize fit.

TPL layers can be modified, by cutting out areas in the layer/layers over the hot spots or pressure points. No cutting should be done on the layer that comes in contact with the aircrewmember's head (the inside layer). The size and shape of the removed area of TPL should match the shape and size of the irritated area on the aircrewmember's head. Circular shapes, (i.e. penny, nickel, quarter, etc.) work best for correction of hot spots, while half round shapes (i.e. half-moon, quarter-moon and crescent-moon) usually alleviate areas of pressure.

1. After preliminary adjustments to the TPL have been accomplished, have the aircrewmember don the helmet to check fit and comfort. If further adjustment/modification is required follow procedures below.

WARNING

The TPL assembly requires a maximum of five layers and a minimum of two layers to provide proper fit and impact attenuation protection.

2. Remove TPL layers one at a time from the liner. Pressure relief around the ears can be achieved by removing layers from the outside of the liner. Number each layer as it is removed (first layer No. 1, second layer No. 2, etc.) to aid in reassembly, if required. Remove up to, but no more than, three layers from the assembly. Check for proper fit after each layer is removed.

3. If a satisfactory fit has been achieved, have the aircrewmember doff the helmet.

4. If after the above steps have been performed, and a safe, stable fit cannot be obtained, then the TPL may be heated so that it conforms to the aircrewmember's head shape. Perform custom fitting in accordance with paragraph 4-52.

CAUTION

To prevent heat damage to the TPL plastic layers, do not store the helmet in a closed cockpit or automobile. Temperatures in these closed areas can exceed 200°F (93.3°C) on an 85°F (30°C) day.

4-52. Custom Fitting of TPL Assembly and Installation Instructions for the Oregon Aero Zetaliner. To custom fit the TPL assembly or to install the optional Oregon Aero Zetaliner, proceed as follows:

Materials Required

Quantity	Description	Reference Number
1	Oregon Aero Zetaliner (Note 1)	95132, 3, 4, 5 (medium); 95142, 3, 4, 5 (large); 95152, 3, 4, 5 (extra large); 95162, 3, 4, 5 (extra large wide) NIINs TBD

Notes: 1. Oregon Aero Zetaliners are commercially available from Oregon Aero Corporation, Scappoose, OR 97056. Telephone (503) 543-7399.

NOTE

Refer to local Aeromedical Safety Officer (AMSO) for location of nearest suitable oven to conduct the heating and forming of the TPL assembly. If unable to achieve a satisfactory fit after heat forming the TPL or using the optional Oregon Aero Zetaliner, contact area FAILSAFE Tiger Team for helmet fitting assistance.

Oregon Aero Zetaliners are optional (commercially available) comfort liners that are approved for use in place of the supplied thermoplastic liner. The liners are provided in 4 sizes, with 4 different foam thicknesses available in each size. The last three digits of the part number indicate the liner size and thickness, for example in P/N 95162, the digits "16" denote the size extra large wide, the last digit "2" represents a 1/4-inch thick foam layer, the thinnest foam layer provided. Other layers available are "3" (3/8-inch), "4" (1/2-inch),

"5" (5/8-inch). When replacing the TPL with the Zetaliner, remove the TPL cover and count the number of plastic layers. Order the Zetaliner corresponding to the correct size for the helmet with the last digit of the part number matching the number of thermoplastic layers being replaced. To replace a 4 layer TPL in a size extra large helmet, order P/N 95154.

1. Reassemble the TPL by replacing the removed layers in the order in which they were removed. After the TPL is assembled, secure the layers by passing a heated soldering pencil through all five layers at the original attachment point.

2. Reinstall the TPL cover on the layers prior to heating.

3. Set the oven rack to the lowest position, and heat the oven to 200° ±5°F. Place a thermometer on the rack in a position where it may be observed throughout the entire heating process.

4. Thoroughly brief the aircrewmember on the fitting procedures, emphasizing those to be performed by the aircrewmember.

CAUTION

Do not attempt to heat the TPL in a microwave oven (which will not heat the layers) or a toaster oven (which will damage the liner).

Do not remove the cloth cover; the TPL is heated as a unit.

Monitor the oven temperature constantly to avoid overheating. Do not leave the TPL unattended while heating.

5. After 15 minutes, ensure the oven is stabilized at the pre-set temperature, and place the TPL with the fabric side down in the center of the oven rack. Set timer. See table 4-8.

Table 4-8. Maximum Heating Time per Number of Layers

Number of Layers	Time (Minutes)
5	8
4	7
3	6
2	5

NOTE

Heating characteristics of ovens vary. The time stated above is a guideline and may have to be adjusted to suit your oven.

6. To allow easy positioning of the heated liner into the helmet, place masking tape over the rear hook fastener tapes on the energy absorbing liner.

CAUTION

The TPL plastic layers will be hot. When removing the TPL from the oven, touch the fabric cover only.

NOTE

The following steps are to be performed by the aircrewmember assisted by the Aircrew Survival Equipmentman (PR), and should be accomplished within 30 seconds of removal of the heated liner from the oven.

7. Remove the TPL from the oven, touching only the fabric-covered portion. Squeeze the sides of the TPL to clear the earcups, and insert the heated TPL into the helmet with the wide end toward the front. The Aircrew Survival Equipmentman should hold the rear portion of the TPL tightly against the energy-absorbing liner during donning to ensure the TPL does not bunch up in the rear.

8. With the TPL symmetrically aligned in the helmet, have the aircrewmember hook thumbs over the edgeroll, spread the helmet slightly, place the brow of the helmet against the forehead, and rotate the helmet rearward and downward to don. Ensure that the edgeroll on the helmet brow is positioned just out of the line of sight as the aircrewmember looks upward.

9. Have the aircrewmember apply downward pressure on helmet with palms of hands until the ears are centered in the earcups. Maintain this pressure for five minutes.

10. Have the aircrewmember release downward pressure at the end of five minutes. Check helmet fit. If necessary, remove one layer from the inside of the TPL and repeat steps 2 through 8 until the fit is satisfactory.

11. Once a satisfactory fit is achieved, have the aircrewmember doff the helmet. Lift the rear portion of the TPL away from the energy-absorbing liner and remove masking tape from the hook fastener tapes. Secure TPL to the hook fastener tapes.

12. If unable to achieve a satisfactory fit with the TPL following procedures outlined in steps 4 through 10

above, order the appropriate size and thickness Oregon Aero Zetaliner.

13. Place the Zetaliner inside the helmet by centering the folded liner onto the energy absorbing liner, spread sides outward to mate with the installed hook fastener tabs. Ensure the widest end (with three sewn segments) is facing the front of the helmet.

4-53. INSTALLATION OF BAYONET RECEIVER ASSEMBLY. To install the bayonet receiver assembly to obtain correct visor mask interface, refer to the procedures outlined in Chapter 5 (for the MBU-12/P series oxygen masks) or Chapter 6 (for the MBU-23/P or MBU-24/P22P-16 oxygen masks).

4-54. INSTALLATION OF CBR RECEIVERS. CBR receivers are installed as follows:

Materials Required

Quantity	Description	Reference Number
As Required	Adhesive, RTV 102/732	MIL-A-46106 NIIN 00-877-9872
2	Snap Stud	MS27983-2
2	Washer	MS35335-58
2	Nut	MS35649-264B
2	Screw	MS51959-33

NOTE

The latest TACAIR helmets for fixed wing aircraft must be builtup prior to installation of CBR receivers. Ensure that all helmets have had bayonet receivers installed prior to performing this installation.

1. Remove the earcups from the helmet. There is no need to disconnect the earphones or communications cables.

2. Carefully peal back the pile lining in the earcup region to expose the backplate of the oxygen mask receivers.

NOTE

If necessary to ensure a proper fit on the aircrewmember, the bottom screw hole on the bayonet receiver may be used instead of the top screw hole.

3. Remove the top screw from the bayonet receiver and discard; it will no longer be required.

4. Deleted.

NOTE

Do not over-tighten new upper screw attaching the snap stud to the jaw receiver as the brass snap stud can be easily deformed by application of excessive force.

5. Insert the screw through the snap fastener stud and install the screw into the top hole in the bayonet receiver. The screw will be threaded through the bayonet receiver and helmet shell and will exit through the backplate on the inside of the shell. If there is not enough screw length, use a razor knife to cut out and remove a portion of the leather visor retention buffer pad to ensure proper installation. Install a lock washer and nut on the screw inside the helmet shell and tighten.

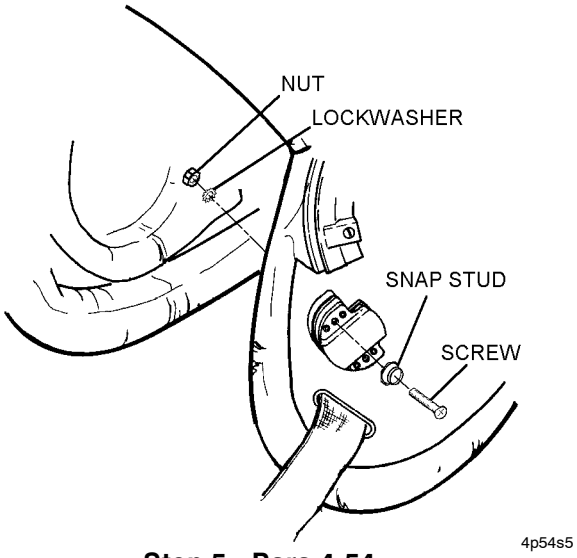

Step 5 - Para 4-54

6. Cement pile fastener back onto the inside of the helmet shell and reinstall the earcups.

7. Install socket portion of the snap fastener as follows:

a. Have aircrewmember don the CBR respirator assembly and helmet.

b. Adjust toggle harness terminal to the midpoint range (to allow for further adjustment later).

c. Hold mask in proper position on aircrewmember's face.

d. Adjust straps and cables to proper position and tension for the aircrewmember.

NOTE

The toggle harness cables should lie over the hooks on the facepiece front, when the V-bow is down.

e. Flip the V-bow down into flight position. Mark the location on the adapter strap where the adapter strap is over the center of the stud portion of the snap fastener installed on the helmet.

NOTE

During installation of socket, orient the pull-the-dot socket so the adapter strap can be pulled directly forward to release the adapter strap socket from the snap that is mounted on the helmet.

f. Install the socket portion of the snap fastener at the position marked on the adapter strap.

g. Have aircrewmember snap the fasteners together. Ensure mask position and tension are acceptable.

4-55. INSTALLATION OF LIGHTWEIGHT (BUNGY) VISOR. Select visor from table 4-2B or 4-2D which meets helmet size and mission requirements and proceed as follows:

Materials Required

Quantity	Description	Reference Number
1	Lightweight Visor	See table 4-2B or 4-2D
As Required	Thread, Nylon, Size E	V-T-295 NIIN 00-244-0609

1. Install visor by positioning visor on front of helmet and securing it in place using snap fasteners.

2. Adjust strap tension.

3. If desired by the aircrewmember, tack the visor retention strap friction adapter in place with one turn of double E thread, once required tension is achieved.

4-56. INSTALLATION OF SINGLE VISOR ASSEMBLY. Install Single Visor Assembly as follows:

Materials Required

Quantity	Description	Reference Number
1	Visor Assembly	88B7586-2 NIIN 01-360-7285
As Required	RTV 102/732 Adhesive	MIL-A-46106 NIIN 00-877-9872
As Required	Tape, Pressure Sensitive Adhesive	A-A-1243 NIIN 00-782-6220

1. Remove helmet plate and cover assembly and place in VIDS/MAF bag, along with attaching screws and flat washers. The bag shall be clearly identified, using aircrewmember's identification number, and stowed for future reconfiguration, if necessary.

2. Remove internal components in accordance with paragraph 4-86 step 1.

3. Locate tooling dimples on exterior surface of helmet shell earcup cavities on right and left sides of helmet. Dimples are positioned 1 1/4 inch forward of visor snap fasteners and are 1 1/2 inches apart, aligned vertically.

4. Using draftman's compass, determine position for upper and lower visor track holes as follows:

NOTE

Compass settings are 3 5/8 inches for size medium helmet, 3 3/4 inches for size large, and 4 1/2 inches for size extra large.

a. For right side upper track hole, adjust compass setting, set compass point in center of lower dimple, and inscribe an arc on the helmet surface upward toward crown of helmet.

NOTE

Compass settings are 2 1/8 inches for size medium helmet, 2 3/8 inches for size large, and 2 3/4 inches for extra large.

b. Adjust compass setting, set compass point in center of upper dimple, and inscribe a second arc on helmet surface upward toward crown of helmet. Mark the place on the helmet where the inscribed arcs intersect. Repeat process to determine position of upper track hole for left side of helmet.

NOTE

Compass settings are 2 3/4 inches for size medium helmets, 2 7/8 inches for size large, and 3 1/2 inches for size extra large.

c. For right side lower track hole, adjust compass setting, set point of compass in center of lower dimple and inscribe an arc on helmet surface upward toward helmet brow.

NOTE

Compass settings are 2 3/8 inches for size medium helmets, 2 1/2 inches for size large, and 2 5/8 inches for extra large.

d. Adjust compass setting, set compass point in center of upper dimple and inscribe a second arc on helmet surface forward toward edgeroll. Mark the place on helmet where inscribed arcs intersect. Repeat procedure for left side of helmet.

5. With rounded end oriented toward top of helmet, position right side visor track with upper and lower track holes centered over marks made on helmet surface in step 4 above. Using pencil, mark position of center visor track hole on helmet surface through center track hole. Repeat procedure for installation of left side of helmet.

6. At each of the three marked locations on each side of the helmet, drill a small pilot hole. Using a 0.250 drill bit, enlarge each pilot hole to finished 1/4-inch dimension.

7. Position right side post retainer assembly on inside of helmet with posts aligned with and inserted in three right side visor track holes. On right side exterior, position spacer (size extra large helmets only), visor track, and visor retainer over track holes. Secure in place using three screws. Repeat procedure for installation of left side visor track.

8. Apply pressure sensitive tape to underside of visor track locking guide.

9. Install clear visor assembly in visor tracks with round visor cutout positioned left and aft. Raise and lower visor to check freedom of movement.

10. Unlock visor locking guide lock plate and move it to open position.

11. Slip visor locking guide aligning round visor cutout over round hole at top of visor locking guide. Ensure bottom edge of locking guide remains at top of locking guide. Ensure bottom edge of locking guide remains aligned with helmet brow edge-roll. With visor lock key aligned fore and aft, insert visor lock knob through visor cutout into slot of visor lock key in visor locking guide slot.

12. Lower visor and slide locking plate to closed and locked position.

13. Reposition visor locking guide as necessary to find optimum visor operating position. When optimum position is selected, press locking guide firmly into place on exterior helmet shell.

14. Lower visor to full down position. Using a pencil, through visor locking guide mark location of four upper mounting screws on helmet surface. Unlock visor locking guide lock plate and slide open to expose rounded hole in locking guide slot.

15. Raise visor to full up position. Rotate visor locking knob 1/4 turn clockwise to disengage locking key from visor locking guide slot and remove knob. Move visor aft until free of tracks and remove.

16. Using a pencil, through visor locking guide, mark location of remaining two mounting screw holes on helmet surface. Remove visor locking guide.

17. At each of the six marked locations (see steps 15 through 17), drill a small pilot hole. Using a 0.250 drill bit, enlarge each pilot hole to 1/4 inch finished dimension.

18. On inside of helmet, align post retainer with six visor locking guide holes. On helmet exterior, align visor locking guide, with locking plate closed, with six drilled holes and secure in place with six screws.

19. Open visor locking guide locking plate and insert selected visor in tracks. Position visor cutout over locking guide rounded out slot. With key positioned fore and aft, insert visor lock knob through cutout into slot. Rotate visor lock knob 1/4 turn counterclockwise to engage key in slot and lower visor. Slide visor locking guide plate closed.

20. Reinstall internal components in accordance with paragraph 4-86 step 2.

4-57. INSTALLATION OF PILE FASTENER TAPE. To install pile fastener tape to the helmet assembly for attachment of the SDU-5/E or the SDU-39/N distress signal light, proceed as follows:

Materials Required

Quantity	Description	Reference Number
2 Inches	Fastener Tape, Pile, Type I, 2-Inch Width	MIL-F-21840 NIIN 00-926-4930
As Required	Adhesive, Polychloroprene, Class 3	MIL-A-5540 NIIN 00-515-2246

NOTE

Use of any size of type pile fastener tape available through local supply is authorized. Black or olive green are preferred colors.

Refer to Rescue and Survival Equipment, NAVAIR 13-1-6.5 for addition of hook tape to distress signal light.

1. Raise visor to full up position and lock in place with visor lock knob.

2. At a point 1/4 inch aft of raised visor, center a 2 x 2 piece of pile fastener tape on crown of helmet shell assembly. Hold in place and trace lightly around pile fastener tape with a lead pencil to make an outline on the surface of the reflective tape installed on the helmet shell assembly.

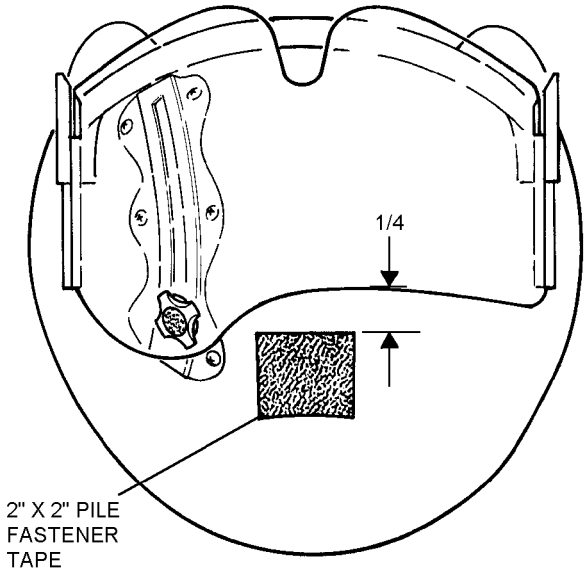

4p57s2

Step 2 - Para 4-57

3. Apply adhesive to outlined area and allow adhesive to become dry (approximately 30 minutes).

4. Apply adhesive to underside of pile fastener tape and a second coat of adhesive to helmet area. Allow adhesive to become tacky (approximately 15 minutes).

5. Press pile fastener tape firmly onto prepared area on helmet shell assembly.

Section 4-4. Modifications

4-58. GENERAL.

4-59. There are no modifications for TACAIR Fixed Wing Helmet Assemblies.

Section 4-5. Maintenance

4-60. GENERAL.

4-61. Proper care and use of the TACAIR fixed wing series helmet assemblies are essential to ensure optimum performance during emergencies and routine operations. The aircrewmember's responsibility for maintenance of the helmet assembly is limited to cleaning (see paragraph 4-75). Repairs or other maintenance action required shall be performed by organizational level or above upon issue and at least every 90 days thereafter. All maintenance actions and inspections shall be documented in accordance with OPNAVINST 4790.2 Series.

NOTE

The inspection interval for fixed wing helmet assemblies assigned selected air reserve aircrewmembers has been extended to 180 days vice 90 days, providing the helmets are stowed under controlled conditions.

4-62. INSPECTION.

4-63. PREFLIGHT/POSTFLIGHT INSPECTIONS. The Preflight and Postflight Inspection is a visual inspection performed by the aircrewmember to whom the helmet assembly is issued before/after each flight. To perform the inspection, visually inspect for the general overall condition of the helmet assembly. Refer to paragraph 4-65.

NOTE

Defects or questionable areas noted during this inspection shall be referred to the proper maintenance activity for required corrective action.

4-64. SPECIAL INSPECTION. The special inspection of the helmet shall be conducted upon issue and every 90 days thereafter at the organizational level. It shall consist of a visual inspection, a functional check of the helmet communication components and a thorough cleaning of the helmet assembly. The HGU-87/P22P-16 and HGU-89/P22P-16 helmets, in addition to the 90-day special inspection of the helmet, require a helmet bladder leakage test. This test is to be performed upon installation of the bladder and every 360 days thereafter by the organizational maintenance level.

4-65. Visual Inspection. Visually inspect the helmet assembly as follows:

1. Inspect chin/nape strap assembly for loose or broken stitching, snap fastener retention, and fraying. Repair broken stitching, reset loose snap fasteners, or replace chin/nape assembly.

2. Inspect helmet shell assembly for splits, cracks, chips, and delamination. Replace helmet shell assembly if damage is deemed extensive.

3. Inspect MK-634/AIC cable clip (if installed) for security of attachment to communications cable grommet.

CAUTION

A laser visor is considered damaged and shall not be used if a scratch is detected that exceeds one third of the thickness of the lens. A lens can continue to be used if a scratch of lesser depth is detected and is not in the critical visor areas or reported as bothersome by the aircrewmember.

NOTE

Refer to paragraph 4-67 for instructions for disposal of laser visor.

4. Inspect visor assembly for cracks, splits, chips, and delaminations and lenses for scratches and cracks. Replace visors deemed to have extensive damage.

5. Inspect edgeroll for rips, tears, splits, or loosening from helmet shell. Small (under 2-inch total length) tears, rips, or splits may be repaired in accordance with paragraph 4-102.

6. Inspect communication cables and cordsets for cut, split, or abraded insulation.

7. Inspect earcup assembly for proper retention to helmet shell assembly.

8. Inspect earpads for sound attenuation and pliability.

9. Inspect all hardware for damage and security of attachment. Tighten or replace as necessary.

10. Inspect oxygen mask receivers for proper function and retention to helmet shell assembly.

4-66. Functional Check. Functionally check the helmet assembly in accordance with the procedures in NAVAIR 17-15BC-22.

NOTE

Defects determined from these inspections shall be referred to the proper maintenance activity for required corrective action.

4-67. DISPOSAL OF LASER VISOR. The Laser Eye Protective Visor is a controlled item. The visor must be destroyed by the organizational level activity having custody using any of the following methods: incineration, crushing, or shattering.

4-68. HELMET BLADDER LEAKAGE TEST.

4-69. The helmet bladder assembly shall be leak tested as follows:

Materials Required

Quantity	Description	Reference Number
As Required	Oxygen, Aviator's Breathing Type I	MIL-O-27210

Support Equipment Required

Quantity	Description	Reference Number
1	NCE Leakage Tester, TTU-551/E	3549AS100
1	Stop Watch or Timing Device	—
1	Tensioning Tool	MS90387-1

WARNING

When working with oxygen, make certain that clothing, tubing, fittings, and equipment are free of oil, fuel, hydraulic fluid, and/or combustible material. Fire or explosion can result when even slight traces of combustible materials come in contact with oxygen under pressure.

CAUTION

Ensure hoses are not kinked when performing Leakage Test.

NOTE

Do not attempt to perform any maintenance without becoming thoroughly familiarized with Navy Combat Edge TTU- 551/E Leakage Tester.

Prior to performing leakage test, ensure that a pretest check has been performed on Test Set TTU-551/E in accordance with NAVAIR 17-15GB-505.

NOTE

For index letters referred to in this paragraph, refer to figure 4-1 unless otherwise noted.

4-70. TEST SETUP.

1. Ensure test set inlet pressure valve (F) is OFF and oxygen supply cylinder valve is fully closed.

2. Connect regulator (A) to oxygen supply cylinder. Ensure regulator (A) is not loaded by turning pressure adjustment handle counterclockwise until spring tension is released.

3. Ensure oxygen flow control valve (B) attached to regulator (A) is closed.

4. Slowly, fully open the oxygen supply cylinder. Relieve any excess pressure indicated on regulator gage (I) by opening and closing the oxygen flow control valve (B).

5. Connect oxygen hose (C) to fitting (B1) of regulator and connect the other end of oxygen hose (C) to the test set oxygen INLET (D).

6. Open oxygen flow control valve (B).

7. Adjust regulator (A) until 1.0 psig is indicated on regulator (A) outlet pressure gage (I).

8. Attach hose (O) to oxygen outlet port (H). Attach intermediate hose (S) to vest/helmet adapter (L) of hose (O). Connect helmet bladder hose (N) to intermediate hose (S) using quick disconnects.

4-71. SYSTEM TEST.

CAUTION

Inflating the bladder to pressures that exceed 2.5 psig will damage the bladder. Any helmet bladder subjected to pressure in excess of 2.5 psig must be removed from service.

NOTE

No adjustment to regulator (A) should be necessary during the filling process.

1. Prepare the helmet bladder by removing the thermoplastic liner (TPL) and loosen the helmet bladder from the polystyrene inner shell.

2. Turn test set inlet pressure valve (F) to the ON position.

3. Allow the pressure reading on pressure gage (G) to stabilize. Pressure in the bladder should indicate 1.0 ± 0.1 psig. Adjust pressure reading on pressure gage (G) by turning pressure adjusting handle on regulator (A) as necessary to achieve 1.0 ± 0.1 psig.

4. Turn test set inlet pressure valve (F) to the OFF position.

5. Time low pressure gage (G) reading. Leakage shall not exceed 0.1 psig in 30 seconds. If leakage exceeds allowable limit, proceed to paragraph 4-72.

6. Disconnect intermediate hose (S) from the helmet bladder hose (N).

7. Secure the helmet bladder to the polystyrene inner shell and reinstall TPL.

8. Provided there are no more tests to be conducted on equipment requiring the TTU-551/E, the test stand shall be secured in accordance with paragraph 4-74. Otherwise, attach the intermediate hose (S) to the helmet/vest bladder adapter (L) and return to step 1 to test additional helmet bladders.

4-72. LEAK ISOLATION.

1. Turn test set inlet pressure valve (F) to the ON position.

2. Using leak detection compound, check for leakage of helmet bladder quick disconnects and hose. If leakage is detected, proceed as follows:

a. Turn inlet pressure valve (F) to OFF.

b. Replace helmet bladder quick disconnects and/or hose as necessary. Attach replacement connector and/or hose using a cable tie with tension set to 3.

c. Retest helmet bladder assembly in accordance with paragraph 4-71.

3. If no leakage is indicated while using leak detection compound, perform a bladder decay test in accordance with paragraph 4-73.

4-73. BLADDER DECAY TEST.

1. Turn test set inlet pressure valve (F) to the OFF position.

2. Disconnect helmet bladder hose (N) from intermediate hose (S).

3. Remove intermediate hose (S) from helmet/vest adapter fitting (L).

CAUTION

Cut through head of cable tie using diagonal cut pliers. Do not attempt to cut strap underneath head.

4. Carefully cut the cable tie securing the male connector to the helmet bladder hose (N) and remove the connector.

5. Connect helmet/vest bladder adapter fitting (L) of hose assembly (O) to the helmet bladder hose (N).

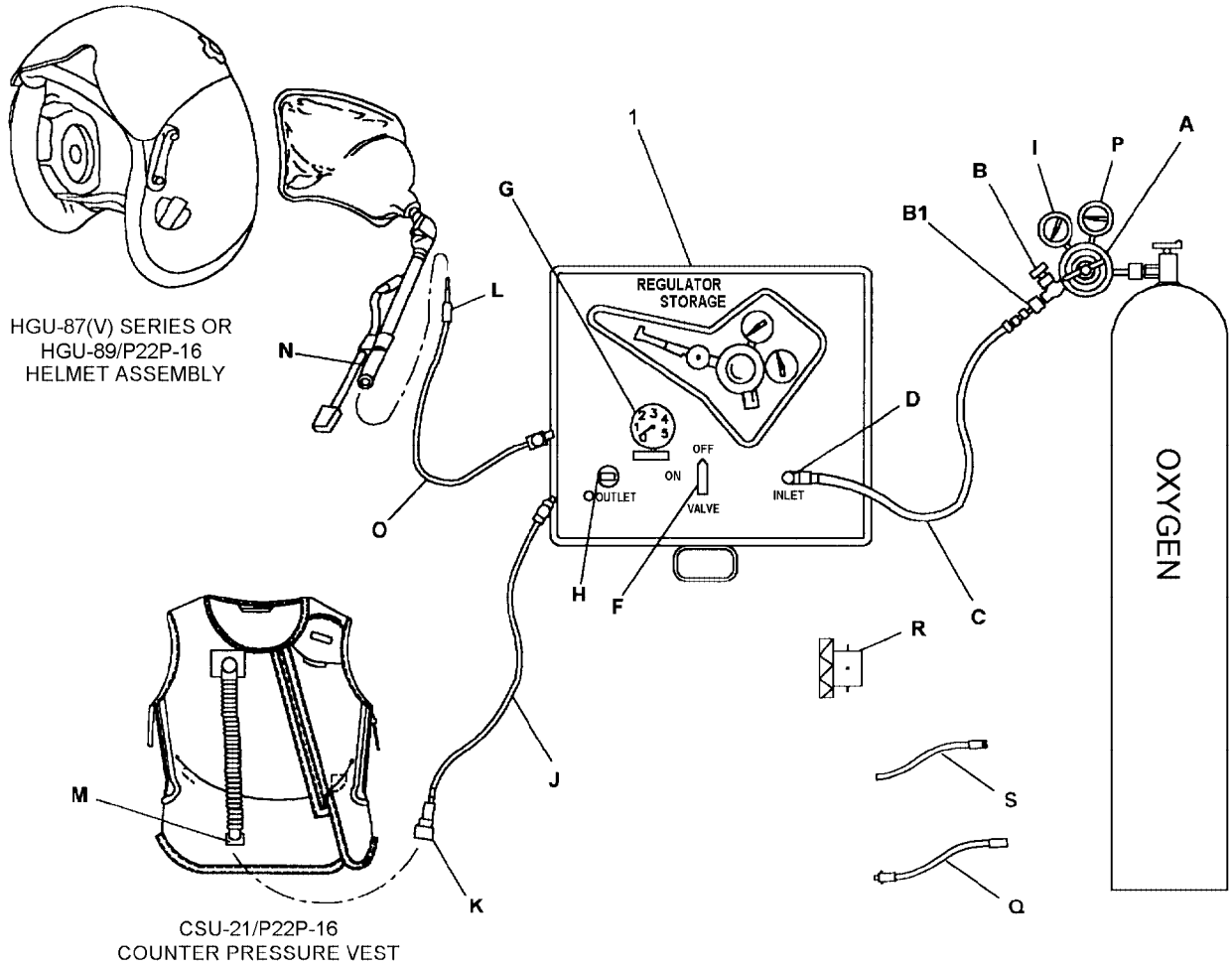

1 LEAKAGE TESTER TEST SET
A REGULATOR
B VALVE (OXYGEN FLOW CONTROL)
B1 QUICK DISCONNECT (FITTING)
C HOSE, OXYGEN
D OXYGEN INLET (QUICK DISCONNECT)
E RELIEF VALVE (NOT SHOWN)
F INLET PRESSURE VALVE
G LOWER PRESSURE (0 - 5 PSIG)
H OXYGEN OUTLET (QUICK CONNECT)
I REGULATOR OUTLET GAGE
J HOSE ASSEMBLY (VEST)
K VEST ADAPTER (FITTING)
L HELMET/VEST BLADDER ADAPTER (FITTING)
M VEST ASSEMBLY FILL/DUMP VALVE
N HELMET BLADDER HOSE
O HOSE ASSEMBLY (HELMET BLADDER/VEST)
P REGULATOR INLET GAGE
Q ADAPTER CAP ASSEMBLY
R VEST ADAPTER CAP
S HOSE ASSEMBLY (HELMET BLADDER, INTERMEDIATE)

4-1

Figure 4-1. Leakage Tester, TTU-551/E

CAUTION

Inflating the bladder to pressures that exceed 2.5 psig will damage the bladder. Any helmet bladder subjected to pressure in excess of 2.5 psig must be removed from service.

NOTE

No adjustment to regulator (A) should be necessary during the filling process.

6. Turn test set inlet pressure valve (F) to the ON position. Small areas of abrasion can be covered with suitable electrical tape, cut or split insulation may require cable replacement.

7. Allow the pressure reading on pressure gage (G) to stabilize. Pressure in the bladder should indicate 1.0 ±0.1 psig. Adjust pressure reading on pressure gage (G) by turning pressure adjusting handle on regulator (A) as necessary to achieve 1.0 ±0.1 psig.

8. Turn test set inlet pressure valve (F) to the OFF position.

9. Time low pressure gage (G) reading. Leakage shall not exceed 0.1 psig in 30 seconds. If helmet bladder leakage exceeds allowable leakage limits, disconnect helmet bladder hose (N) from helmet/vest adapter (L), replace helmet bladder in accordance with paragraph 4-99, and retest assembly in accordance with paragraph 4-71.

10. Provided there are no more tests to be conducted on equipment requiring the TTU-551/E, the test stand shall be secured in accordance with paragraph 4-74. Otherwise, attach the intermediate hose (S) to the helmet/vest bladder adapter (L) and return to step 9 to test additional helmet bladders.

4-74. SECURING THE TEST SET.

1. Disconnect intermediate hose (S) from hose assembly (O).

2. Disconnect hose assembly (O) from test set oxygen OUTLET (H).

3. Close oxygen supply cylinder.

4. Turn test set inlet pressure valve (F) to the ON position, to bleed pressure from test set.

5. Turn regulator (A) counterclockwise until spring tension is released.

6. Close oxygen flow control valve (B) and turn test set inlet pressure valve (F) to the OFF position.

7. Disconnect all hoses from test set and regulator (A) and stow in lid of test set.

8. Disconnect regulator (A) from oxygen supply cylinder and stow in space provided in test set.

9. Stow all hoses and fittings/caps in space provided in test set.

4-75. CLEANING.

4-76. Clean the various parts of this series of helmet assemblies as follows:

Materials Required

Quantity	Description	Reference Number
As Required	Detergent, Laundry	Commercial
As Required	Cloth, Lint-Free	MIL-C-85043 NIIN 00-165-7195
As Required	Plastic Polish	P-P-560 TY1 NIIN 00-935-3794
As Required	Saddle Soap, or equivalent	—

1. PRU-55/P and PRU-58/P Helmet Shell Assemblies.

a. Clean helmet shell assembly using a mild detergent and a lint-free cloth dampened with water. Mild abrasive scouring powder may be used to remove stains or scuff marks.

b. Wipe helmet shell assembly clean using a water-dampened cloth to remove detergents.

2. Clean leather edgeroll and chin/nape pad assembly as follows:

a. Apply a small amount of saddle soap or equivalent with a damp sponge to leather surfaces.

b. Rub vigorously to create a thin soap film.

c. Wipe with a damp lint-free cloth and let dry overnight.

3. Chin/Nape Strap Assembly and Fitting Pads.

a. Clean by lightly sponging with a mild solution of detergent and water.

b. Wipe with a damp, lint-free cloth.

4. TPL Assembly.

a. Remove cover assembly from TPL assembly.

b. Clean cover assembly by hand washing with a mild solution of detergent and water.

c. Thoroughly rinse in clear water and air dry.

5. Skull Cap. Laundering of skull cap is responsibility of aircrewmember.

6. Visor Assemblies.

CAUTION

Ensure that no abrasive particles are lodged in the polish application cloth or paper or in the cloth or paper used to polish the outside of the visor lenses.

Do not use solvent or abrasive type cleaners. Do not use polish on Laser Visors to remove scratches.

a. Clean each visor lens with mild soap and water using soft paper tissues, soft flannel cloth, soft cotton pads, or a water-dampened chamois and allow to dry.

b. If visor lenses are still soiled or slightly scratched, clean outside of visor only with liquid polish canopy cleaner. Clean the inside of visor lenses with a soft, lint-free cloth.

c. Dry visor lenses with a clean lint-free cloth.

4-77. REPLACEMENT/REPAIR OF HELMET COMPONENTS.

4-78. The following procedures list the steps necessary to replace/repair individual components of the helmet assembly. Disassembly shall be only to the extent necessary to perform required replacement/repair. Refer to table 4-9 for listing of repairs, fabrication, and replacement instructions.

4-79. REPLACEMENT OF REFLECTIVE TAPE. If reflective tape must be removed from helmet assembly, proceed as follows:

Materials Required

Quantity	Description	Reference Number
As Required	Denatured Alcohol	TT-I-735 NIIN 00-286-5435

1. Remove old tape.

NOTE

Removal of reflective tape requires considerable care and effort.

a. To minimize damage to the surface, carefully work a beveled (not sharp) short blade putty knife under the edge of the tape, stripping the sheeting from the adhesive.

b. Remove adhesive with a cloth dampened with denatured alcohol.

2. Refer to paragraph 4-40 for the installing of reflective tape on the helmet shell assembly.

4-80. REPLACEMENT OF PILE TAPE. To replace pile tape on the helmet assembly for attachment of the SDU-5/E or SDU-39/N distress signal lights, proceed as follows:

Materials Required

Quantity	Description	Reference Number
2 Inches	Fastener Tape, Pile, Type I, 2-Inch Width	MIL-F-21840
As Required	Adhesive, Polychloroprene, Class 3	MIL-A-5540 NIIN 00-515-2246

NOTE

Use of any size or type pile tape available through local supply is authorized. Black or olive green are preferred colors.

1. Remove damaged pile tape and clean area.

2. Apply adhesive to outer helmet shell or visor housing where damaged pile tape was removed. Allow adhesive to dry (approximately 30 minutes).

3. Apply adhesive to underside of pile fastener tape and a second coat of adhesive to the helmet area. Allow to become tacky (approximately 15 minutes).

4. Press pile fastener tape firmly onto prepared area of helmet or visor housing.

5. Document in accordance with OPNAVINST 4790.2 Series.

Table 4-9. Repairs/Fabrications/Replacements

Description of Repair/Fabrication/ Replacements	Application	Paragraph
Replacement of Reflective Tape	All helmet assemblies (when applicable) with the exception of those worn in combat areas, which may have the reflective tape removed at the discretion of the local commander.	4-79
Replacement of Pile Tape	All helmet assemblies (when applicable)	4-80
Replacement of Earphones, Earcup Assemblies, Installation of the Oregon Aero Hush Kit Combo and Installation of the Oregon Aero Softseal Ear Cushions	All helmet assemblies (when applicable)	4-81
Replacement of Single Visor Assembly	HGU-68(V)/P and HGU-87(V)/P helmet assemblies	4-82
Replacement of Single Visor Lens	HGU-68(V)/P and HGU-87(V)/P helmet assemblies	4-83
Replacement of Thermoplastic Liner (TPL) Assembly, PRU-52/P or Oregon Aero Zetaliner	All helmet assemblies (when applicable)	4-84
Replacement of Thermoplastic Liner (TPL) Assembly, PRU-52/P Components	All helmet assemblies (when applicable)	4-85
Replacement of Energy Absorbing Liner	All helmet assemblies (when applicable)	4-86
Replacement of M22442/37-4708 (CX-4708A/AIC) Cable Assembly and MK-634/AIC Cable Clip	All helmet assemblies (when applicable)	4-87
Replacement of M22442/15-1 (CX-4832A/AR) Cable Assembly or M22442/19-1 (CX-12972/AR) Cable Assembly	All helmet assemblies (when applicable)	4-89
Replacement of M26542/2-01 Boom Microphone Assembly	All helmet assemblies (when applicable)	4-90
Replacement of M23595/1-2 (AM-3597C/A) Amplifier	All helmet assemblies (when applicable)	4-91
Replacement of Amp Mounting Bracket	All helmet assemblies (when applicable)	4-92
Replacement of the CX-4434/U Cable Assembly	All helmet assemblies (when applicable)	4-93
Replacement of the PRU-55/P or PRU-58/P Helmet Shell Assembly	All helmet assemblies (when applicable)	4-94
Replacement of Chin/Nape Strap Assembly and Nape Strap or Nape Strap Pad	All helmet assemblies (when applicable)	4-95
Replacement of Chin Strap and Chin Strap Pad	All helmet assemblies (when applicable)	4-96
Replacement of Bayonet Receiver Assembly	All helmet assemblies (when applicable)	4-97
Replacement of Helmet Plate Assembly (NVIIS)	HGU-68(V)/P and HGU-85(V)/P helmet assemblies	4-98
Replacement of KMU-561/P22P-16 Helmet Bladder Assembly	HGU-87(V)/P and HGU-89/P helmet assemblies	4-99
Fabrication of Camouflage Cover	HGU-68(V)/P and HGU-85(V)/P helmet assemblies	4-100
Repair of Helmet Shell	All helmet assemblies (when applicable)	4-101
Repair of Edgeroll	All helmet assemblies (when applicable)	4-101A

4-81. REPLACEMENT OF EARPHONES, EARCUP ASSEMBLIES, INSTALLATION OF THE OREGON AERO HUSH KIT COMBO AND INSTALLATION OF THE OREGON AERO SOFTSEAL EAR CUSHIONS. To replace the earphone, earcup assembly or to install the Oregon Aero Hush Kit Combo or Softseal Ear Cushions, proceed as follows:

Materials Required

Quantity	Description	Reference Number
1	Earcup Assembly	89C7735-1 (CAGE 97427)
1	Earphone	H-87B/U
1	Oregon Aero Softseal Ear Cushions, 3/4-inch (Note 1)	20050
1	Oregon Aero Softseal Ear Cushions, 1 1/8-inch (Note 1)	20025
1	Oregon Aero Hush Kit Combo, 3/4-inch (Note 1)	28034
1	Oregon Aero Hush Kit Combo, 1 1/8-inch (Note 1)	28118

Notes: 1. Oregon Aero Softseal Ear Cushions are authorized optional replacements for P/N 88D7554-1 earpad sets. The Oregon Aero Hush Kit Combo is an authorized optional replacement for P/N 89C7735-1 earcup assembly. Both items are commercially available from Oregon Aero Corporation, Scappoose, OR 97056. Telephone (503) 543-7399.

1. Place helmet upright on padded work surface.

2. Remove earcup assembly.

a. Remove earcup assembly from pile of interior helmet shell assembly.

b. Remove earpad backers from LH and RH earpads.

c. Remove earcups with enclosed earphone holders from LH and RH earpads.

d. Remove earphone holders and enclosed earphones from LH and RH earcups.

e. Remove earphones from earphone holders.

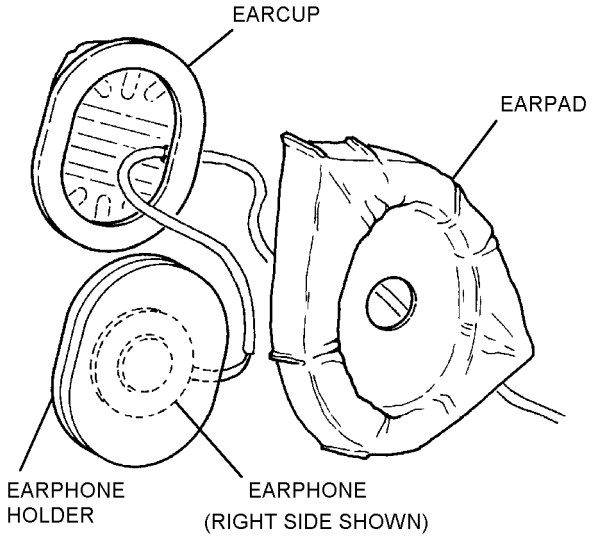

4p81s2c

Steps 2c thru 2e - Para 4-81

f. Loosen two setscrews and remove earphone contacts from earphones. Discard earphones if defective.

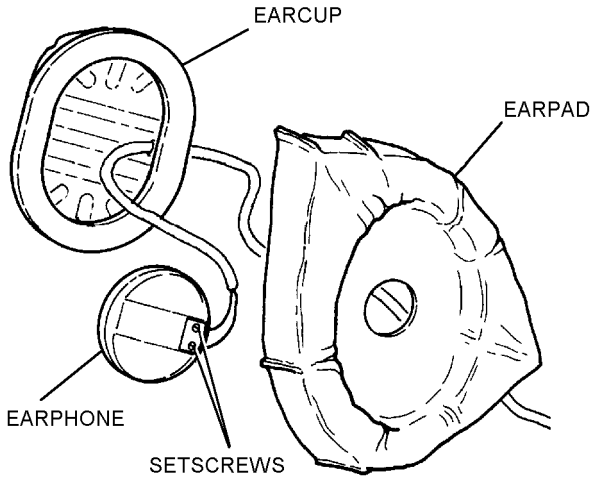

4p81s2f

Step 2f - Para 4-81

g. Remove cable assembly leads and grommets from LH and RH earcup shells and LH and RH earpads.

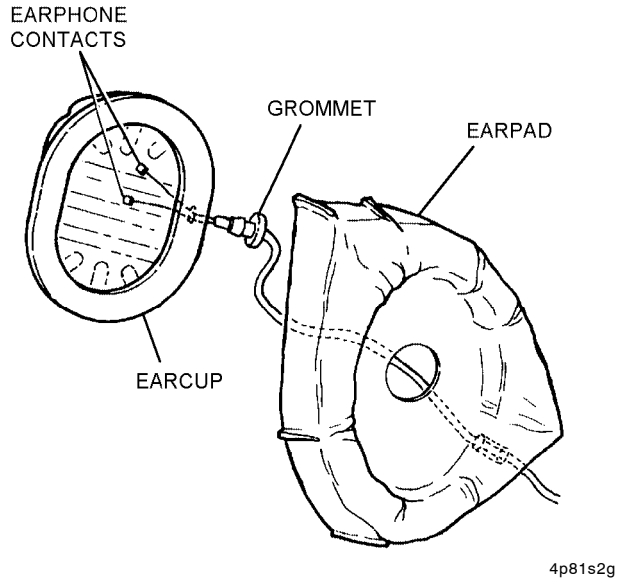

Step 2g - Para 4-81

h. Discard defective earcups, earpads, earpad backers, earphone holders, or fitting pads.

i. Keep any serviceable earcup assembly parts for reuse.

3. Install earcup/earphone assembly.

NOTE

The longer earphone leads must be positioned to lead to the right earphone.

The LH earpad can be distinguished from the RH earpad by ensuring that the communication cord holes face the rear of the helmet shell assembly when placed inside the helmet shell assembly.

a. Install the LH and RH earphone leads through the holes in the LH and RH earpads.

NOTE

The LH earcup can be distinguished from the RH earcup by their positioning inside the helmet shell assembly. The tapered ends of the earcups should face down and the communication cord holes should face the rear of the helmet shell assembly.

b. Install the earphone contacts and small grommets into the holes of the LH and RH earcups. Secure the grommets.

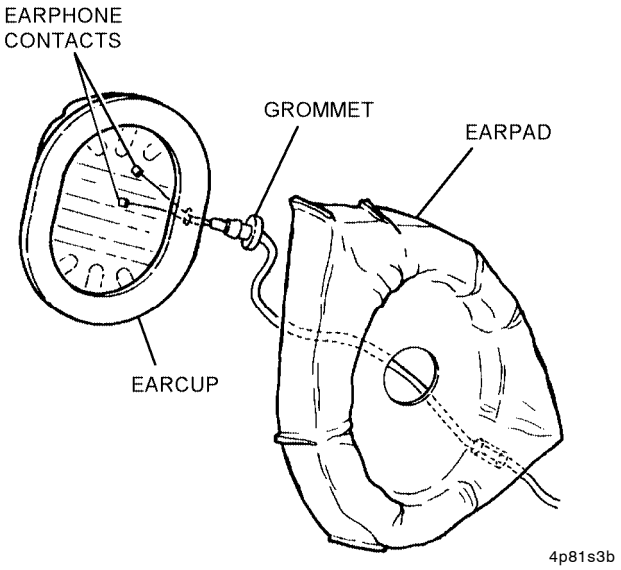

Step 3b - Para 4-81

c. Insert earphone contacts into earphones and tighten setscrews.

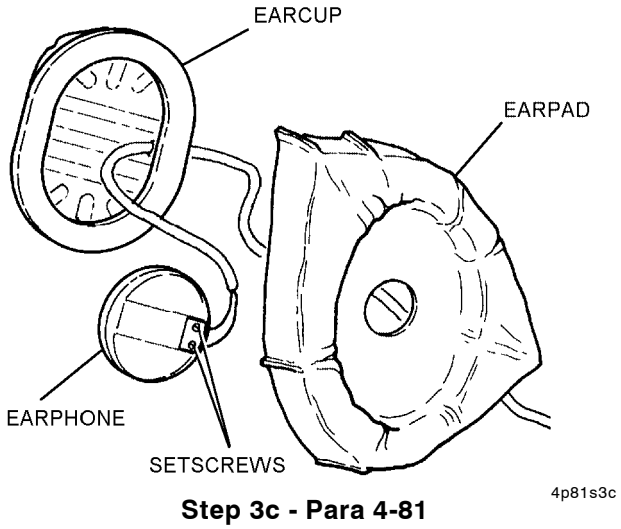

Step 3c - Para 4-81

d. Insert earphones into cavity of earphone holders.

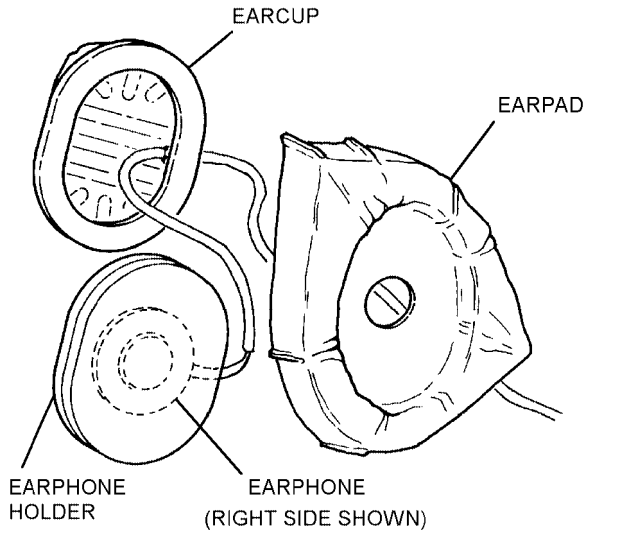

Step 3d - Para 4-81

e. Position earphone holders with enclosed earphones into LH and RH earcups. Smooth earphone holders inside LH and RH earcups to eliminate bunching.

f. Position LH and RH earcups into earpads and cover with earpad backers.

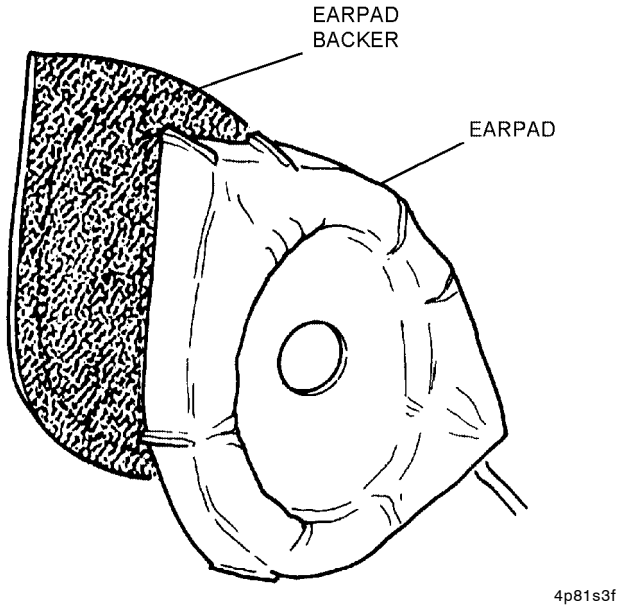

Step 3f - Para 4-81

g. Install earcup assembly onto the pile section of the LH and RH sides of the interior helmet shell assembly.

4. Install Oregon Aero Softseal earseal or the Oregon Aero Hush Kit as follows:

a. For earseal installation.

(1) Insert the communication cable leads with the earphone contacts through the holes at the rear of each earcup. Secure the small grommets encircling the leads into the holes in the LH and RH earcups.

(2) Insert earphone contacts into earphones and tighten setscrews.

(3) Insert earphones into the cavity of the earphone holder.

(4) Position earphone holders with enclosed earphones into the RH and LH earcups. Smooth earphone holders inside earcups to eliminate bunching.

(5) Install earseals onto earcups by hooking them over one end of the earcup and carefully stretching them over the lip of the earcup.

(6) Route RH earcup and cable lead around inside nape of helmet to the RH helmet earcup cavity.

(7) Install RH and LH earcup assemblies onto the pile fastener material on the interior of the helmet shell.

b. For hush kit installation.

(1) Insert communications cable leads with the earphone contacts through the holes at the bottom of the RH and LH hush kit. Secure the small grommet encircling the leads into the holes in each hush kit.

(2) Insert earphone contacts into earphones and tighten setscrews.

(3) Insert earphones into the cavity of the hush kit earphone holders.

(4) Position earphone holders with enclosed earphones into the RH and LH hush kit. Smooth earphone holders to eliminate bunching.

(5) Route RH hush kit and cable lead around inside nape of helmet to the RH helmet earcup cavity.

(6) Install RH and LH hush kits onto pile fastener material on interior of helmet shell.

5. Document in accordance with OPNAVINST 4790.2 Series.

4-82. REPLACEMENT OF SINGLE VISOR ASSEMBLY. Replace single visor assembly as follows:

Materials Required

Quantity	Description	Reference Number
1	Visor Assembly	88B7586-2 NIIN 01-360-7285
1	Post Retainer	T94A8675
2	Post Retainer	T94A8676-1
1	Visor Lock Assembly	96B9367
As Required	Adhesive, RTV 102/732	MIL-A-46106 NIIN 00-877-9872

1. Remove damaged single visor assembly.

a. Loosen visor lock knob and lower visor to expose visor locking guide locking plate.

b. Lift upward on locking guide locking plate release tab and slide locking plate to open position.

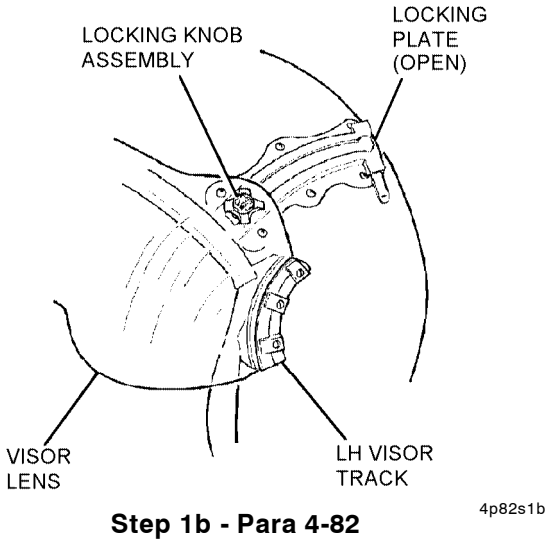

Step 1b - Para 4-82

c. Using lock knob, raise visor to full up position. Rotate visor lock knob 90 degrees counterclockwise in visor locking guide to release visor lock key sub-assembly; lift and remove lock knob assembly from helmet.

d. Slide visor rearward until free from right and left visor tracks and set visor aside.

e. Remove internal components in accordance with paragraph 4-86, step 1.

f. Remove six attaching screws from locking guide. Remove locking guide assembly from helmet shell exterior, set aside, and retain attaching screws and post retainer.

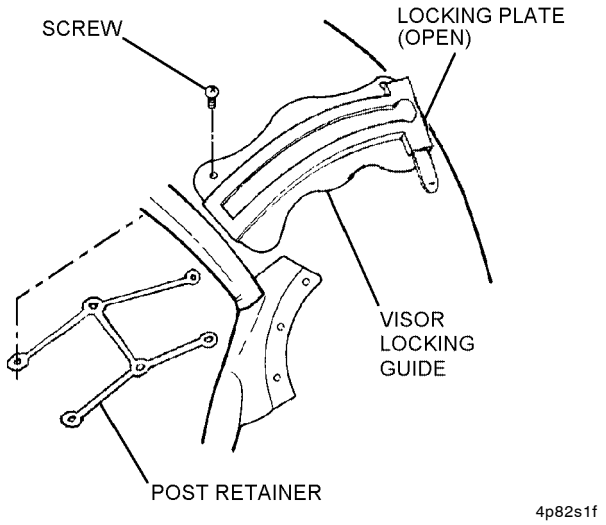

Step 1f - Para 4-82

g. Remove three attaching screws from right and left visor tracks and remove tracks and interior retainers from helmet shell assembly.

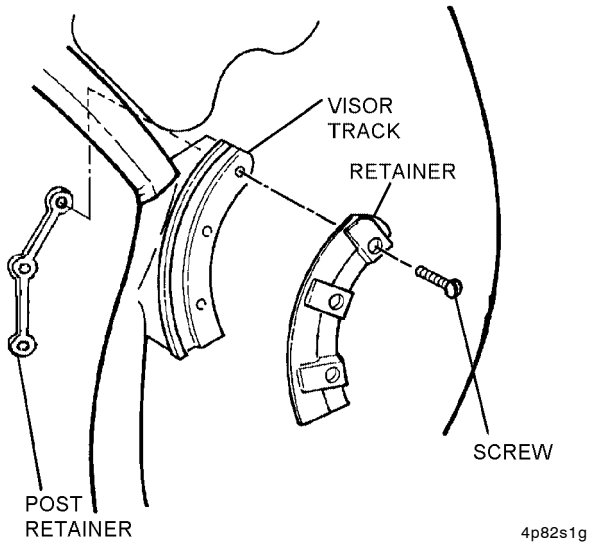

Step 1g - Para 4-82

2. Install replacement single visor assembly.

a. Align visor locking guide with six predrilled holes on top left side of helmet shell exterior and visor locking guide retainer positioned on interior of helmet shell.

b. Apply small amount of RTV to first few threads of each attaching screw and secure visor locking guide to helmet shell with six attaching screws.

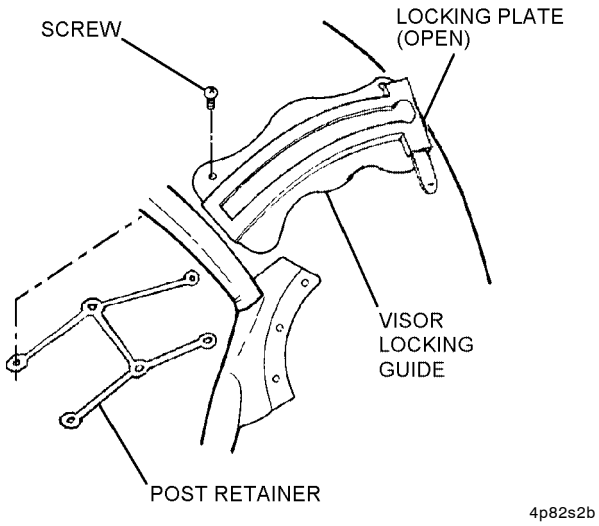

Step 2b - Para 4-82

c. Align holes of left tapered spacer (XL helmets only), lower visor track (on exterior), and retainer (on interior) with three predrilled holes in helmet shell and insert three posts.

d. Apply small amount of RTV to first few threads of three attaching screws, insert screws, align post retainers, and secure left visor track to helmet shell.

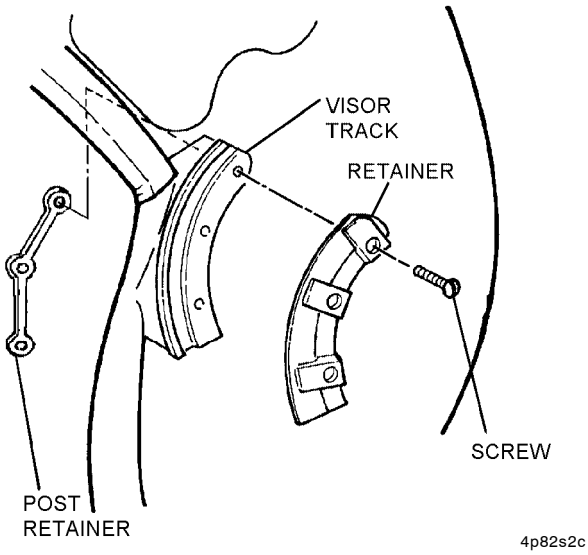

Steps 2c and 2d - Para 4-82

e. Repeat procedures in steps 2c and 2d for right visor track assembly.

f. Reinstall internal components in accaordance with paragraph 4-86 step 2.

3. Insert Visor lens (neutral or clear).

a. Lift and slide visor guide locking plate to open position.

b. Place visor lens track guides into grooves of left and right visor tracks and position visor lock knob over cut-out in upper end of visor locking guide.

NOTE

Ensure visor lock knob is fully unlocked.

c. Place visor lock key into slot of visor locking guide. Rotate visor lock knob 90 degrees clockwise with key within slot of visor locking guide. Using visor lock knob, lower visor to full down position. Slide visor locking guide locking plate to closed and locked position.

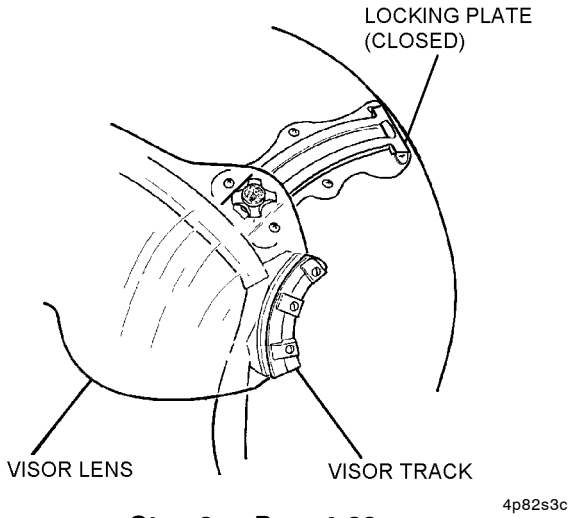

Step 3c - Para 4-82

d. Raise visor to full up position and lock in place.

4. Document in accordance with OPNAVINST 4790.2 Series.

4-83. REPLACEMENT OF SINGLE VISOR LENS.

Select visor from table 4-2A or 4-2C which meets helmet size and mission requirements and proceed as follows:

Materials Required

Quantity	Description	Reference Number
1	Single Visor Lens	See table 4-2A or 4-2C

1. Remove installed single visor lens.

a. Loosen visor lock knob and lower visor to expose visor guide locking plate.

b. Gently lift upward on locking plate release tab and slide locking plate to open position.

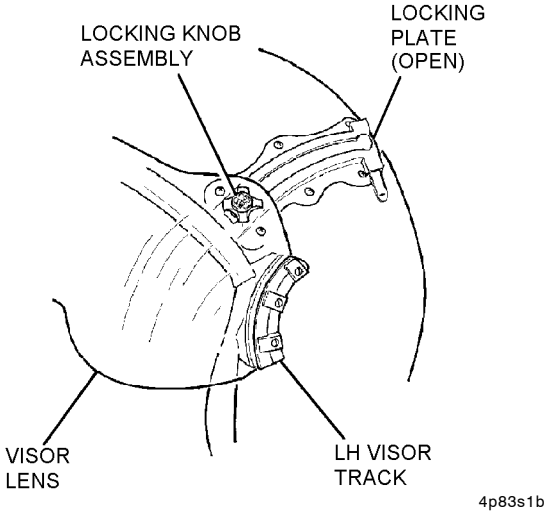

Step 1b - Para 4-83

c. Using locking knob, raise visor to full up position. Rotate visor lock knob 90 degrees counterclockwise in visor locking guide track to release the visor lock key subassembly from the track of the visor locking guide, lift upward, and remove lock knob assembly from helmet.

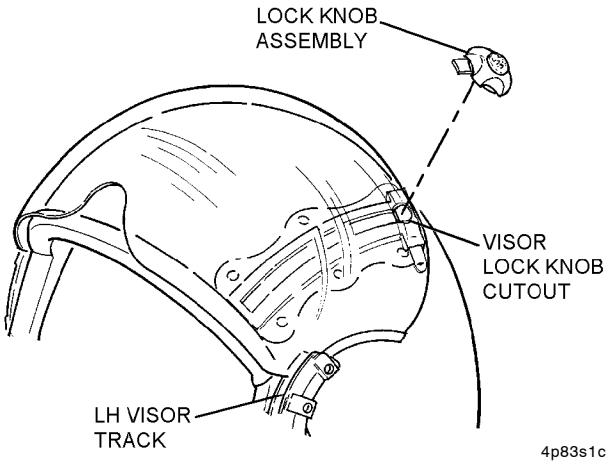

Step 1c - Para 4-83

d. Slide visor toward rear of helmet until free of RH and LH visor tracks and set aside.

2. Dispose of laser protective visor lenses in accordance with paragraph 4-67.

3. Install replacement single visor lens.

NOTE

To better understand the mechanical process involved in visor installation procedures, use the clear visor to observe visor lock knob key subassembly counterclockwise rotation.

a. Place visor lens track guides into grooves of RH and LH visor tracks and position visor lock knob cut-out over upper end of visor locking guide.

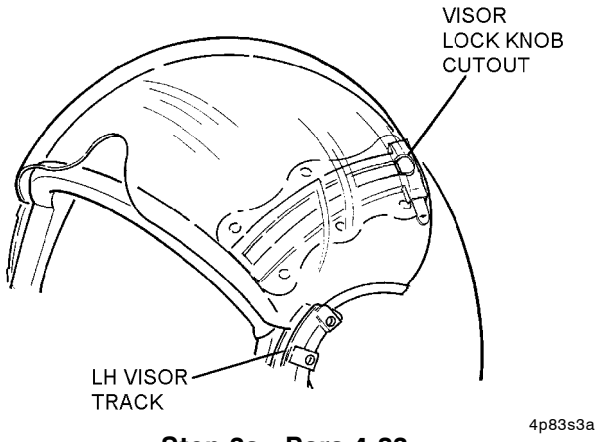

Step 3a - Para 4-83

b. Verify visor lock knob is fully unlocked. Place visor lock knob key subassembly into slot of visor locking guide track. Rotate the visor lock knob key subassembly 90 degrees counterclockwise within the slot of the visor locking guide. Lower visor using visor lock knob and visually verify 90 degree rotation of key subassembly. Slide visor locking guide locking plate to the closed and locked position. Raise visor to full up position and secure in place using visor lock knob.

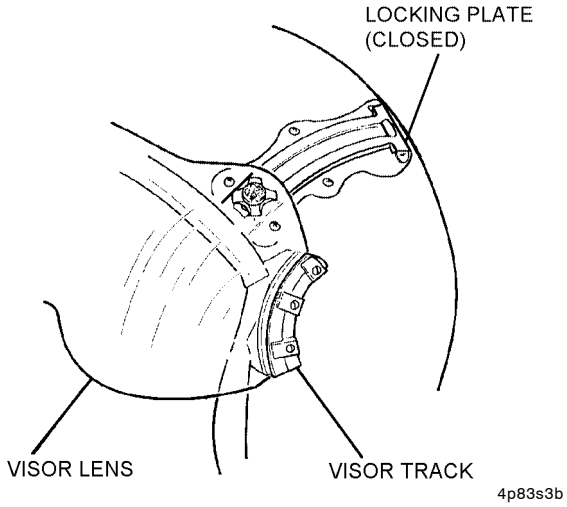

Step 3b - Para 4-83

4. Document in accordance with OPNAVINST 4790.2 Series.

4-84. REPLACEMENT OF THERMOPLASTIC LINER (TPL) ASSEMBLY, PRU-52/P, OR OREGON AERO ZETALINER. To replace the TPL assembly or the Oregon Aero Zetaliner, proceed as follows:

Materials Required

Quantity	Description	Reference Number
1	TPL Assembly, Medium	85D7087-1P (CAGE 97427)
	-or-	
1	TPL Assembly, Large	85D7087-2P (CAGE 97427)
	-or-	
1	TPL Assembly, Extra-Large	85D7087-3P (CAGE 97427)
	-or-	

Materials Required(Cont)

Quantity	Description	Reference Number
1	Oregon Aero Zetaliner (Note 1)	95132, 3, 4, 5 (medium); 95142, 3, 4, 5 (large); 95152, 3, 4, 5 (extra large); 95162, 3, 4, 5 (extra large wide) NIIN TBD

Notes: 1. Oregon Aero Zetaliners are commercially available from Oregon Aero Corporation, Scappoose, OR 97056. Telephone (503) 543-7399

NOTE

Oregon Aero Zetaliners are optional (commercially available) comfort liners that are approved for use in place of the supplied thermoplastic liner. The liners are provided in 4 sizes, with 4 different foam thicknesses available in each size. The last three digits of the part number indicate the liner size and thickness, for example in P/N 95162, the digits "16" denote the size extra large wide, the last digit "2" represents a 1/4-inch thick foam layer, the thinnest foam layer provided. Other layers available are "3" (3/8-inch), "4" (1/2-inch), "5" (5/8-inch). When replacing the TPL with the Zetaliner, remove the TPL cover and count the number of plastic layers. Order the Zetaliner corresponding to the correct size for the helmet with the last digit of the part number matching the number of thermoplastic layers being replaced. To replace a 4 layer TPL in a size extra large helmet, order P/N 95154.

1. With helmet inverted, squeeze the sides of the TPL or Zetaliner inward to clear earcups. Detach from the hook fastener tabs and remove from inside the helmet.

2. Discard defective TPL or Zetaliner.

3. To install replacement TPL or Zetaliner into the helmet, center the folded liner on the energy absorbing liner and spread to mate with the installed hook fastener tabs. Ensure the widest end of the liner is attached to the helmet brow hook fastener tabs.

4. Contact aircrewmember to schedule a post replacement fit check.

5. Document in accordance with OPNAVINST 4790.2 Series.

THIS PAGE INTENTIONALLY LEFT BLANK.

4-85. REPLACEMENT OF PRU-52/P THERMOPLASTIC LINER (TPL) ASSEMBLY COMPONENTS. If components of the TPL must be replaced, proceed as follows:

Materials Required

Quantity	Description	Reference Number
1	Cover Assembly, Medium	85D7088-1
	-or-	
1	Cover Assembly, Large	85D7088-2
	-or-	
1	Cover Assembly, Extra-Large	85D7088-3
1	Layer Assembly, Medium	88D7518-1
	-or-	
1	Layer Assembly, Large	88D7518-2
	-or-	
1	Layer Assembly, Extra-Large	88D7518-3
As Required	Tape, Double-Coated, Vinyl, 1/2-Inch Width	No. 419 (3M)

1. Remove TPL from helmet shell assembly.

2. Separate TPL cover assembly from layer assembly.

3. Discard defective assembly.

4. Remove any double faced tape from serviceable component.

5. Install new TPL components in accordance with paragraph 4-49.

6. Fit new TPL assembly in accordance with paragraph 4-51.

7. Document in accordance with OPNAVINST 4790.2 Series.

4-86. REPLACEMENT OF ENERGY ABSORBING LINER. If the energy absorbing liner must be replaced, proceed as follows:

Support Equipment Required

Quantity	Description	Reference Number
1	Spatula, Metal	GGG-C-74G TY18GRD NIIN 00-680-2634

Materials Required

Quantity	Description	Reference Number
1	Energy Absorbing Liner, Medium	90C8006-1 NIIN 01-360-3746
	-or-	
1	Energy Absorbing Liner, Large	90C8006-2 NIIN 01-360-9316
	-or-	
1	Energy Absorbing Liner, Extra-Large	90C8006-3 NIIN 01-360-9317

1. Remove the energy absorbing liner.

NOTE

Removal of the energy absorbing liner requires considerable care and effort to avoid damage to the liner.

a. Invert helmet and remove TPL to expose the energy absorbing liner.

b. Detach the right and left earcup assemblies from the pile fastener tape in helmet shell earcup cavity and position clear of work area.

c. Remove the pan-head screws, flat washers, lock washers and flanged nuts securing the chin/nape strap to the rear of the helmet shell.

CAUTION

Use of liner removal aids other than the approved metal spatula or a 1 inch x 12 inch flexible metal machinists rule to remove the energy absorbing liner is not authorized. Use of unauthorized removal aids will damage the liner, which will result in reduced impact protection.

NOTE

Prior to the removal of the energy absorbing liner, measure across the helmet shell brow and nape edgeroll to determine the centerline and mark. Determine centerline of the liner brow and nape area and mark. The alignment of these marks during installation will aid in eliminating incorrect positioning of the liner.

d. With the helmet inverted on the work surface, position helmet brow area closest to the technician and insert a thin, flexible metal spatula (a 12 inch x 1 inch metal rule can be used) between the inner surface of the helmet shell and the energy absorbing liner.

e. With the spatula at the center of the liner, gently pry inward and upward on the energy absorbing liner to obtain sufficient clearance to permit grasping the liner with the free hand.

f. Maintain upward pressure and continue to withdraw the liner from the interior of the helmet shell. Rotate the liner 90 degrees to the right or left to clear the helmet earcup cavities.

2. Install the replacement liner.

NOTE

Prior to installing liner, ensure all attaching hardware for visor configuration which will be covered by liner is in place.

a. Rotate the liner 90 degrees and place into helmet shell.

b. Reverse rotation and place the front edge of the energy absorbing liner firmly against the inside surface of the front helmet shell edgeroll. Ensure the liner is centered within the helmet by aligning the centerline marks made during liner removal.

c. Press the rear portion of the liner into place ensuring that the rear edgeroll is not pinched or curled under the liner.

d. On inside surface of the energy absorbing liner, install front and rear hook fastener tapes. All four fasteners should be installed approximately 1 1/2 inches to the left and right of the liner centerline to avoid pressure points.

3. Ensure that the chin/nape straps have remained routed through the nape pad and no twists are present.

4. Reconnect the nape pad and chin/nape strap grommets to the rear attachment points by installing the pan head screws, flat washers, lock washers and flanged nuts.

5. Attach the earcup assemblies to the pile fastener tape in the helmet shell earcup cavities and route the communications cord for the right earcup between the energy absorbing liner and the rear edgeroll as required.

6. Reinstall TPL onto energy absorbing liner.

4-87. REPLACEMENT OF THE M22442/37-4708 (CX-4708A/AIC) CABLE ASSEMBLY AND MK-634/AIC CABLE CLIP. Replace the M22442/37-4708 (CX-4708A/AIC) cable assembly and MK-634/AIC cable clip (if installed), proceed as follows:

Materials Required

Quantity	Description	Reference Number
1	Cable Assembly, CX-4708A/AIC (Use until exhausted)	M22442/37-4708 NIIN 00-816-3657
1	Cable Assembly, CX-4708A/AIC (MOD) (Alt. for CX-4708A/AIC)	CX-4708A/AIC (MOD) 89B7742 (CAGE 97427)
1	Cable Clip (optional)	MK-634/AIC NIIN 00-864-8047

NOTE

The use of the MK-634/AIC cable clip is optional.

1. If only the MK-634/AIC cable clip is defective:

a. Remove U-179A/U connector from cable clip.

b. Remove cable clip by rotating it clockwise and pulling away from large grommet.

c. Install new MK-634/AIC cable clip by pressing it against large grommet and rotating counterclockwise.

d. Reinstall U-179A connector into cable clip.

2. If only the M22442/37-4708 (CX-4708A/AIC) cable assembly is defective, remove M22442/37-4708 (CX-4708A/AIC) cable assembly and MK-634/AIC cable clip (if installed).

a. Remove earphones in accordance with paragraph 4-81.

b. Remove U-179A/U cable connector from MK-634/AIC cable clip (if installed).

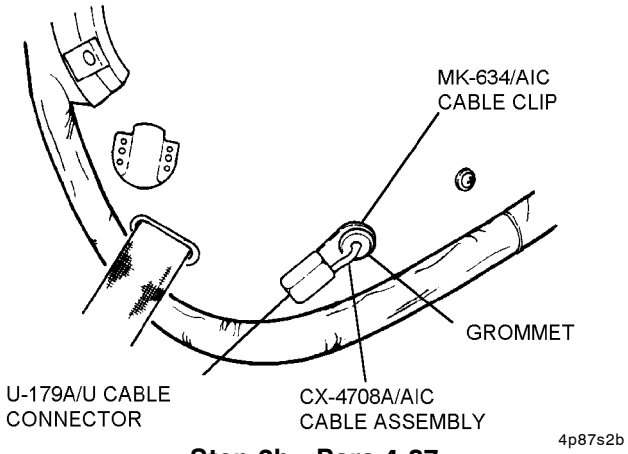

Step 2b - Para 4-87

c. Remove large grommet encircling cable from helmet shell assembly.

d. Discard defective M22442/37-4708 (CX-4708A/AIC) cable assembly.

3. Install new M22442/37-4708 (CX-4708A/AIC) cable assembly, MK-634/AIC cable clip.

NOTE

The use of the MK-634/AIC cable clip is optional.

a. Pass two M22442/37-4708 (CX-4708A/AIC) cable leads with earphone contacts through large hole in bottom rear of helmet shell assembly. Press large grommet encircling cable assembly into large hole and secure.

b. Secure M22442/37-4708 (CX-4708A/AIC) cable assembly connector (U-179A/U) to helmet shell assembly, using MK-634/AIC cable clip (if desired).

NOTE

The longer earphone leads must be positioned leading to the right earphone.

The LH earpad can be distinguished from the RH earpad by ensuring that the communication cord holes face the rear of the helmet shell assembly when placed inside the helmet shell assembly.

c. Install earphones and earcup assemblies in accordance with paragraph 4-81.

4-88. DELETED.

4-89. REPLACEMENT OF M22442/15-1 (CX-4832A/AR) CABLE ASSEMBLY OR M22442/19-1 (CX-12972/AR) CABLE ASSEMBLY. To replace the M22442/15-1 (CX-4832A/AR) cable assembly or M22442/19-1 (CX-12972/AR) cable assembly, proceed as follows:

Materials Required

Quantity	Description	Reference Number
1	Cable Assembly, CX-4832A/AR	M22442/15-1 NIIN 00-961-8516
	-or-	
1	Cable Assembly, CX-12972/AR	M22442/19-1 NIIN 01-016-4130
1	Cable Assembly, CX-4831/AR (Note 1)	M22442/14-1 NIIN 00-631-8566
2	Screws, 6-32 x 1/4-Inch	NIIN 00-638-5517
2	Flat Washer, 0.032-Inch Thick 0.382-Inch O.D. 0.166-Inch I.D.	NAS1197-8 NIIN 00-722-6091
As Required	Adhesive, RTV 102/732	MIL-A-46106 NIIN 00-877-9872

Notes: 1. Use Cable Assembly M22442/14-1 attached to the teardrop fitting of Cable Assembly M22442/15-1 to connect to aircraft audio system.

1. Remove defective cable assembly.

a. Remove earcup assemblies in accordance with paragraph 4-81.

b. Remove screws and flat washers, securing the cable assembly junction block to helmet shell assembly.

c. Remove and discard defective cable assembly.

2. Install replacement cable assembly.

a. Pass four cable assembly earphone leads with the earphone contacts through large hole on left side of helmet shell assembly.

CAUTION

Do not over torque 6-32 x 1/4-inch screws. Over torquing will cause damage to cable assembly junction block.

NOTE

A small amount of RTV may be applied to the first few threads of screws prior to installation.

b. Secure cable assembly junction block to outside of helmet shell assembly using two 6-32 x 1/4-inch screws and two 0.032-inch thick flat washers. Apply no more than 4 in-lbs. of torque to 6-32 x 1/4-inch screws.

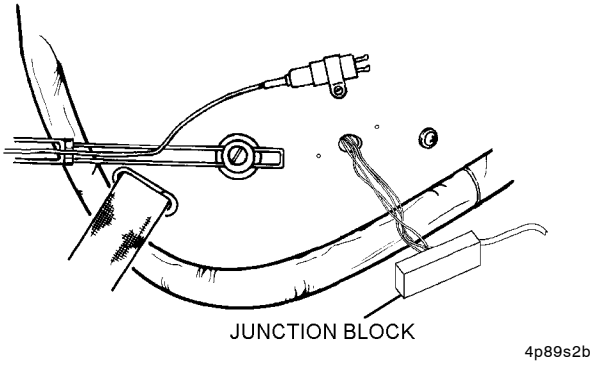

Step 2b - Para 4-89

c. Install earcup assemblies in accordance with paragraphs 4-81.

3. Document in accordance with OPNAVINST 4790.2 Series.

4-90. REPLACEMENT OF BOOM MICROPHONE ASSEMBLY. To replace the boom microphone assembly, select boom microphone assembly with the correct length extension cable and proceed as follows:

Materials Required

Quantity	Description	Reference Number
1	Boom Microphone Assembly (Note 1)	M-33A/AIC NIIN 00-755-4643

Materials Required (Cont)

Quantity	Description	Reference Number
1	Boom Microphone Assembly (Note 2)	M26542/2-01 NIIN 01-188-8529
1	Boom Microphone Assembly (Note 3)	M26542/2-02 NIIN 01-188-8530
1	Boom Microphone Assembly (Note 4)	M26542/2-03 NIIN 01-188-8528

Notes: 1. The M-33A/AIC Boom Microphone Assembly is an M-87/AIC microphone supplied with a 6-inch CX-4434/U extension cable.

2. The M26542/2-01 Boom Microphone Assembly is an M-87/AIC microphone supplied with a 13-inch CX-4434/U extension cable.

3. The M26542/2-02 Boom Microphone Assembly is an M-87/AIC microphone supplied with a 16-inch CX-4434/U extension cable.

4. The M26542/2-03 Boom Microphone Assembly is an M-87/AIC microphone supplied with a 23-inch CX-4434/U extension cable.

1. Remove boom microphone assembly.

a. Disconnect CX-4434/U cable assembly from AM-3597C/A amplifier or cable assembly (as required).

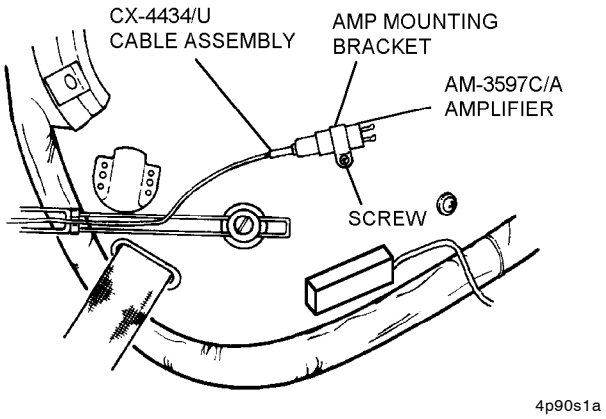

Step 1a - Para 4-90

b. Remove 8-32 x 1/4-inch long pan head screw, knurled nut, serrated washer, outer half of boom adapter, and boom microphone assembly.

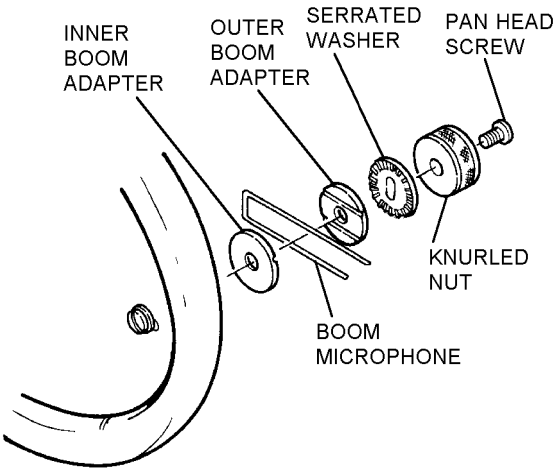

4p90s1b

Step 1b - Para 4-90

c. Discard defective boom microphone assembly.

2. Replace boom microphone assembly.

a. Position replacement boom microphone assembly, and install the outer half of boom adapter, serrated washer, knurled nut, and pan head screw and tighten.

b. Connect CX-4434/U cable assembly to AM-3597C/A amplifier or cable assembly (as required).

3. Document in accordance with OPNAVINST 4790.2 Series.

4-91. REPLACEMENT OF M23595/1-2 (AM-3597C/A) AMPLIFIER. To replace the M23595/1-2 (AM-3597C/A) amplifier, proceed as follows:

Materials Required

Quantity	Description	Reference Number
1	Amplifier, AM-3597C/A	M23595/1-2 NIIN 00-100-4932

1. Remove amplifier.

a. Disconnect all applicable cables from amplifier.

b. Loosen screw attaching amp mounting bracket to helmet shell assembly.

c. Remove and discard defective amplifier.

2. Replace amplifier.

a. Install replacement amplifier into amp mounting bracket and tighten screw.

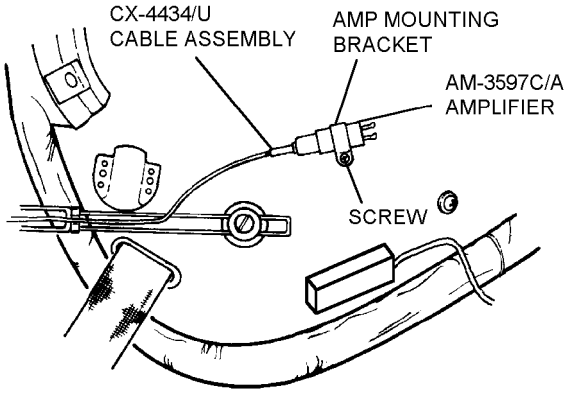

4p91s2a

Step 2a - Para 4-91

b. Connect applicable cable assembly to amplifier.

c. Document in accordance with OPNAVINST 4790.2 Series.

4-92. REPLACEMENT OF AMP MOUNTING BRACKET. To replace the amp mounting bracket, proceed as follows:

Materials Required

Quantity	Description	Reference Number
1	Amp Mounting Bracket	80B4881 (CAGE 97427) NIIN 01-128-5334
As Required	Adhesive, Polychloroprene, Class 3	MIL-A-5540 NIIN 00-515-2246
As Required	Adhesive, RTV 102/732	MIL-A-46106 NIIN 00-877-9872

1. Remove amp mounting bracket.

a. Disconnect all applicable cables from AM-3597C/A amplifier.

b. Loosen screw attaching amp mounting bracket to helmet shell assembly.

c. Remove M23595/1-2 (AM-3597C/A) amplifier from amp mounting bracket.

d. Remove earpad assembly and loosen pile fastener tape.

e. Remove screw, washer, and post securing amp mounting bracket to helmet shell assembly.

f. Discard defective amp mounting bracket.

2. Replace amp mounting bracket.

NOTE

A small amount of RTV may be applied to the first few threads of screws prior to installation.

a. Insert replacement amp mounting bracket onto helmet shell assembly and secure with 8-32 x 1/4-inch screw, flat washer, and post. Do not tighten screw.

b. Install M23595/1-2 (AM-3597C/A) amplifier into amp mounting bracket and tighten screw.

c. Connect applicable cable assemblies to amplifier.

d. Recement pile fastener tape to helmet shell using polychloroprene adhesive.

e. Reinstall earpad assembly.

3. Document in accordance with OPNAVINST 4790.2 Series.

4-93. REPLACEMENT OF THE CX-4434/U CABLE ASSEMBLY. To replace the CX-4434/U cable assembly, select desired length cable and proceed as follows:

Materials Required

Quantity	Description	Reference Number
1	Cable Assembly, CX-4434/U, 6-Inch	M22442/36-1 NIIN 00-848-7662
1	Cable Assembly, CX-4434/U, 13-Inch	M22442/36-3
1	Cable Assembly, CX-4434/U, 16-Inch	M22442/36-4
1	Cable Assembly, CX-4434/U, 23-Inch	M22442/36-6

1. Remove CX-4434/U cable assembly.

a. Disconnect CX-4434/U cable assembly from AM-3597C/A amplifier or cable assembly (as required).

b. Loosen two setscrews securing CX-4434/U cable assembly to boom microphone.

c. Remove and discard defective CX-4434/U cable assembly.

2. Replace CX-4434/U cable assembly.

a. Install U-179/U plug of new CX-4434/U cable assembly into boom microphone assembly and secure by tightening two setscrews.

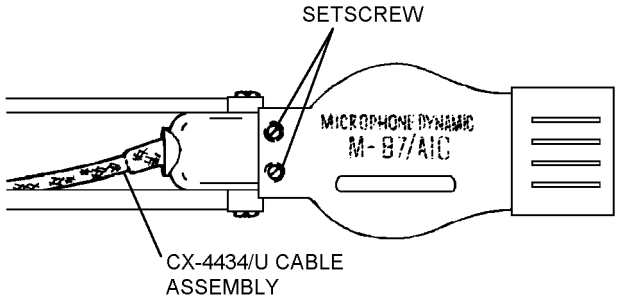

Step 2a - Para 4-93

b. Connect other U-179/U plug of new CX- 4434/U cable assembly to AM-3597C/A amplifier or cable assembly (as required).

3. Document in accordance with OPNAVINST 4790.2 Series.

4-94. REPLACEMENT OF THE PRU-55/P OR PRU-58/P HELMET SHELL ASSEMBLY. To replace the PRU-55/P or PRU-58/P helmet shell assembly, select proper assembly from list below based on size and mission requirements and proceed as follows:

Materials Required

Quantity	Description	Reference Number
1	Helmet Shell Assembly, PRU-55/P, Medium	90A8045-1 (CAGE 97427)
1	Helmet Shell Assembly, PRU-55/P, Large	90A8045-2 (CAGE 97427)
1	Helmet Shell Assembly, PRU-55/P, Extra-Large	90A8045-3 (CAGE 97427)

NOTE

Helmet Shell Assembly PRU-58/P is no longer available from supply system.

1. Remove all serviceable components from condemned helmet assembly for reuse.

2. Once basic helmet shell assembly has been obtained and reusable components established, refer to Section 4-3 for buildup to desired configuration for required aircrew or aircraft applications.

3. Document in accordance with OPNAVINST 4790.2 Series.

4-95. REPLACEMENT OF PRU-53/P CHIN/NAPE STRAP ASSEMBLY, NAPE STRAP OR NAPE STRAP PAD. To replace the chin/nape strap assembly proceed as follows:

Materials Required

Quantity	Description	Reference Number
1	PRU-53/P Chin/ Nape Strap Assembly, Medium	90D7916-4 (CAGE 97427) NIIN 01-360-9308
	-or-	
1	PRU-53/P Chin/ Nape Strap Assembly, Large	90D7916-5 (CAGE 97427) NIIN 01-362-0113
	-or-	
1	PRU-53/P Chin/ Nape Strap Assembly, Extra-Large	90D7916-6 (CAGE 97427) NIIN 01-361-2972
As Required	Adhesive, RTV 102/732	MIL-A-46106 NIIN 00-877-9872

1. Remove chin/nape strap assembly.

a. Remove earcup assembly from interior of LH and RH helmet shell assembly.

b. Remove screws, flat washers, lock washers and flanged nuts from backside of helmet shell assembly securing nape strap to helmet shell assembly.

c. Pull nape straps out from nape strap pad and helmet shell assembly.

d. Remove chin strap and chin strap pad from nape strap.

e. Discard defective chin/nape strap assembly component(s). Retain serviceable components for re-assembly.

2. Install chin/nape strap assembly.

NOTE

The top of chin/nape strap pad is the side from which the straps with grommets protrude.

a. Insert grommeted end of nape strap (with snap fastener at opposite end), from the outside, through slot located on the bottom right of the helmet shell assembly. Ensure that the snap fastener is facing outward.

NOTE

The nape strap with buckle can be installed on right or left of helmet to satisfy aircrewmember.

b. Insert grommeted end of nape strap (with buckle at opposite end) through the slot located on the bottom left outside of the helmet shell assembly.

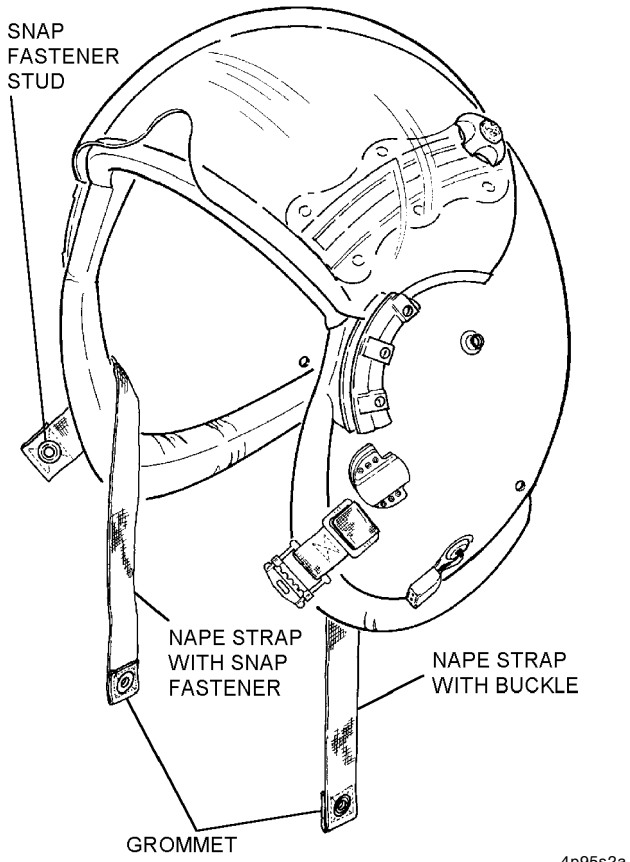

Steps 2a and 2b - Para 4-95

c. Orient the nape strap pad so that its padded side faces toward the inside of the helmet shell and feed each nape strap, (grommeted ends) now located within helmet shell assembly, through the bottom openings of the nape strap pad.

d. Cross the nape straps through the inside of nape strap pad.

NOTE

A small amount of RTV may be applied to the first few threads of screws prior to installation.

e. Attach one nape strap and associated strap from nape strap pad to helmet shell with screw and flat washer (outside) through helmet into lock washer and flanged nut (inside). Repeat for other nape strap.

Ensure that any cable assembly required to be secured to the left nape strap screw is attached with cable clip between washer and helmet shell.

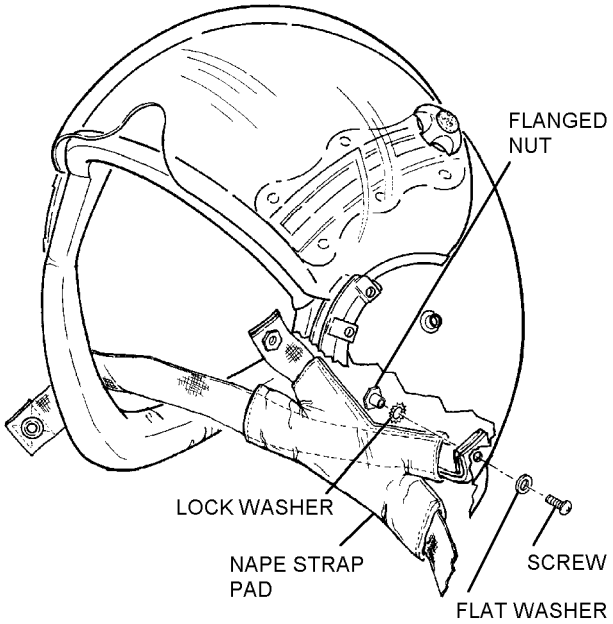

Steps 2c thru 2e - Para 4-95

f. Snap chin strap to snap fastener on right nape strap. Feed opposite end of chin strap through buckle on left nape strap. Secure with hook and pile fastener.

3. Document in accordance with OPNAVINST 4790.2 Series.

4-96. REPLACEMENT OF CHIN STRAP AND CHIN STRAP PAD. To replace the chin strap or chin strap pad, proceed as follows:

Materials Required

Quantity	Description	Reference Number
1	Chin Strap Assembly	84C6708
1	Chin Pad, Black	89C7764-1 NIIN 01-362-8470

1. Remove chin strap assembly and chin pad.

a. Unsnap chin strap snap fastener from nape strap, if required.

b. Remove chin strap assembly by separating assembly's hook and pile tape fastener and unthreading chin strap from nape strap buckle.

c. Slide chin pad off of chin strap.

d. Discard unserviceable components.

2. Install chin strap assembly and chin pad.

a. Snap chin strap to snap fastener on right side nape strap.

b. Slide chin pad onto chin strap with hook tape on chin pad facing downward.

c. Feed chin strap through buckle on left side nape strap.

d. Secure chin strap with hook and pile fastener.

4-97. REPLACEMENT OF BAYONET RECEIVER ASSEMBLY. To replace the bayonet receiver assembly, proceed as follows:

Materials Required

Quantity	Description	Reference Number
1	Bayonet Receiver Assembly	93A8514 (CAGE 97427)
As Required	Adhesive, Polychloroprene, Class 3	MIL-A-5540 NIIN 00-515-2246
As Required	Adhesive, RTV 102/732	MIL-A-46106 NIIN 00-877-9872

1. Remove bayonet receiver assembly.

a. Remove earcup assembly from LH and RH side of interior helmet shell assembly.

b. Pull pile fastener fabric inside helmet shell assembly away from areas where earcup assembly was removed.

c. Remove four screws located inside helmet shell assembly that attach bayonet receiver assembly to LH and RH sides of exterior helmet shell assembly.

d. Discard defective bayonet receiver assembly.

2. Replace bayonet receiver assembly.

NOTE

Each spacer should be fitted against riveted side of bayonet receiver.

A small amount of RTV may be applied to each screw prior to adding lock washer and backplate.

a. While holding pile fabric fastener away from the interior helmet shell assembly, insert screws with lock washers through the backplate from the inside of the helmet shell assembly. Attach bayonet receivers and spacers to outside of the helmet shell assembly. Ensure that projections on bayonet receivers are pointing to the rear of helmet shell assembly.

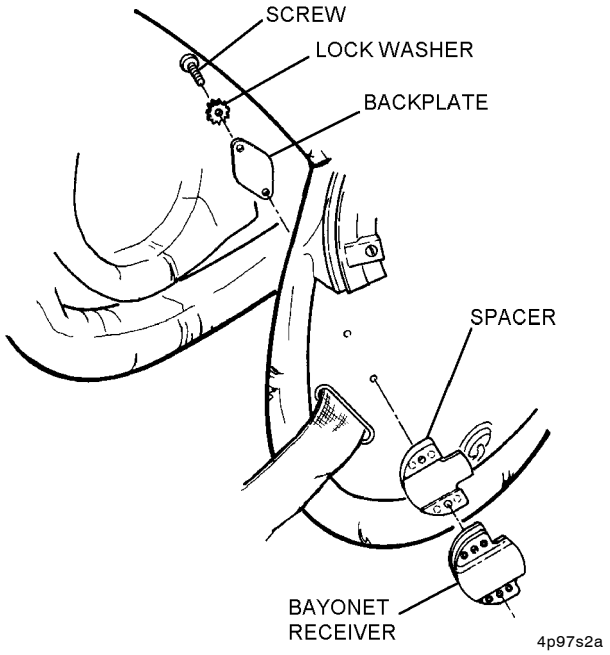

Step 2a - Para 4-97

b. Tighten all screws so that bayonet receivers and spacers are firmly attached to helmet shell assembly.

c. Cement pile fastener fabric to interior of helmet shell assembly. Cut an X pattern in pile fastener fabric, across the screwheads, to facilitate inspection/tightening.

3. Document in accordance with OPNAVINST 4790.2 Series.

4-98. Deleted.

4-99. REPLACEMENT OF KMU-561/P22P-16 HELMET BLADDER ASSEMBLY. Replace the KMU-561/P22P-16 Helmet Bladder Assembly as follows:

1. Remove the helmet bladder assembly.

a. Remove thermoplastic liner.

b. Pull left earcup assembly free from hook and pile fastener.

c. Remove attaching screws from bladder inlet connector cover.

NOTE

It is not necessary to remove inlet connector cover from helmet to replace helmet bladder. Remove cover only if replacement of cover is desired.

d. Rotate inlet cover toward rear of helmet until it is clear of pass-thru hole.

e. Pull bladder free from hook and pile fasteners attached to energy absorbing liner.

CAUTION

Carefully cut laterally through tiedown strap head using diagonal cut pliers. Do not attempt to cut under strap head.

f. Remove tiedown strap securing bladder inlet tube to male inlet connector and remove bladder from helmet.

NOTE

If bladder inlet tube is damaged in attempting removal, cut through tube to facilitate completion of bladder removal.

2. Install hook and pile fasteners to prepare bladder for installation as follows:

a. Lay the bladder out flat with the bladder supply tube on the lower RH side. The side of the bladder which rests against the back of the head should be facing up.

b. Insert bladder in helmet and center it. The bladder should be flat against energy absorbing liner, with the lower edge parallel with and as close to the edge roll as possible.

c. With the bladder inserted, roll the bottom of the bladder upward so that the fastener tabs on the energy-absorbing liner are partly exposed. Using white chalk, mark the bladder lightly to identify correct location of mating fastener tabs.

d. Remove the bladder and install the pile fastener tabs to the bladder at chalk marks by removing pressure sensitive backing and pressing tabs firmly onto bladder.

e. Turn the bladder over and install the TPL hook fastener tab so it is positioned parallel to and along bottom edge of bladder. Install bladder and verify proper alignment. Remove bladder from helmet.

3. Install replacement helmet bladder assembly.

a. If new bladder inlet connector cover is being installed, attach the bladder inlet connector quick disconnect cover to the outside of the helmet by inserting the installation tab into appropriate hole from the outside of the helmet. Pull on the tab from the inside while pushing on the outside of the cover. Once the tab is fully engaged in hole, remove the tail and rotate the cover toward the rear of the helmet and out of the way of the pass-thru hole.

b. Install and attach the bladder in helmet using fastener tabs. Ensure that bladder lays smooth and flat against styrofoam liner and aligns with the edgeroll.

c. Pull the bladder inlet tube through bladder inlet tube pass-thru hole.

d. Remove plug from bladder inlet tube.

e. Attach inlet tube to bladder inlet connector. Ensure that connector and bladder inlet tube are properly positioned to eliminate twisting of the bladder or inlet tube when the connector is placed flush against outside of helmet.

f. Arrange the head of the tiedown strap so that the head rests on the underside of the bladder inlet connection, allowing the head to lie in the front portion of the pass-thru hole.

g. Secure the inlet tube to the bladder inlet connection using the tiedown strap provided and tensioning tool (MS90387-1) set at (3). File down sharp edges of tiedown strap as necessary.

h. Position the bladder inlet connection cover over the bladder inlet connection, and arrange the screw tabs of the cover under the threaded tabs of the connector.

i. Install bladder inlet connector cover using attaching screws and washers. Apply light coat of thread sealing compound to screw threads and install screws and washers from inside of helmet.

j. Attach the nape strap, and reinstall visor snap screw. Insert the TPL, and reinstall left earcup.

k. Install and modify, as necessary, new visor assembly in accordance with paragraph 4-82.

4-100. FABRICATION OF REMOVABLE CAMOUFLAGE HELMET COVER - HGU-68(V)/P OR HGU-85(V)/P. Fabricate camouflage helmet cover from suitable durable material using patterns provided in Chapter 3 as follows:

Materials Required

Quantity	Description	Reference Number
As Required	Cloth, Aramid, Fire Resistant, Sage Green (Note 1)	MIL-C-83429 NIIN 01-147-2064
As Required	Cloth, Camouflage, Woodland (Note 1)	NIIN 01-167-8403
As Required	Fastener Tape, Pile, 2-Inch	MIL-F-21840 NIIN 00-926-4930
As Required	Fastener, Tape, Hook, 1-Inch	MIL-F-21840 NIIN 00-106-5973
As Required	Fastener, Tape, Pile, 1-Inch	MIL-F-21840 NIIN 00-106-5974
As Required	Thread, Nylon, Size E	V-T-295 NIIN 00-204-3884
As Required	Adhesive, Polychloroprene, Class 3	MIL-A-5540 NIIN 00-515-2246

Notes: 1. Use of any type of camouflage material readily available is authorized for the fabrication of the removable camoflage cover.

NOTE

Ensure correct pattern size for helmet being covered.

1. Layout fabric, trace template onto material, and cut pattern.

NOTE

Placement of hook and pile tape securing tabs will vary depending on helmet configuration.

2. Assemble left and right cover center panel sections by machine stitching forming a 3/8-inch seam from forward edge to aft edge of cover.

3. Reverse fabric and top stitch the seam 1/4 inch from folded edge.

4. (HGU-85/P Only) Prepare 5 x 3 1/2-inch template from suitable durable material. Using top stitching as centerline for template placement, orient 5-inch template with length fore and aft and trace helmet plate cutout template on forward portion of assembled center section.

5. At helmet plate cutout, cut and fold excess fabric under and stitch 1/4 inch from edge around entire opening forming neat clean edge.

6. Using 3/8-inch seam, sew together darts marked AA and BB on right and left side panels of helmet cover. Top stitch outer surface of side panels over the 3/8-inch seam 1/4 inch from folded edge of side panel darts.

7. Attach right and left side panels to helmet cover center section using 3/8-inch seam. Top stitch 1/4 inch from folded edge of seam on outer fabric surface of each panel.

8. With visor lock knob and visor removed (on HGU-68/P only), position cover over helmet, mark location of visor locking guide front and rear centerline on outer surface of cover fabric, and mark portion of outer fabric to be modified to accommodate right and left upper visor tracks.

9. (HGU-68/P Only) Prepare a 6 1/4 x 2-inch template from suitably durable material and mark a front and rear centerline. On outer surface of cover, align visor locking guide cutout centerlines with centerlines marked in step 8 above and trace outline of visor locking guide cutout on forward portion of cover.

10. At visor locking guide cutout, cut and fold under excess fabric and stitch 1/4 inch from edge around entire opening forming neat clean edge.

11. Fold under 3/8-inch hem and stitch 1/4 inch from seam edge around entire helmet cover. Attach 1 x 1-inch hook fastener tape to inner surface of helmet cover at selected locations to ensure snug fit.

11A. On exterior of completed cover, sew a strobe light securing patch into place using dimensions from paragraph 4-57 as a guideline for positioning patch.

12. Refer to paragraph 4-57 and install 1 x 1-inch pile fastener tape on helmet shell exterior surface at locations corresponding to hook fastener locations on helmet cover.

4-101. REPAIR OF HELMET SHELL. To repair holes in helmet shell due to bayonet receiver repositioning, change or relocation of communications cables or removal of the boom microphone swivel assembly, proceed as follows:

Materials Required

Quantity	Description	Reference Number
As Required	Tape, Pressure Sensitive, Adhesive	PPP-T-60TY4CL1 NIIN 00-890-9874
As Required	Adhesive, Epoxy, Two-part	MMM-A-1754 NIIN 00-738-6429 or equivalent

1. Remove earcup assemblies from pile fastener on helmet shell interior and position clear of work area. Detach pile fastener material from interior surface of helmet shell assembly and fold clear of work area.

2. Prepare helmet shell exterior surface by removing reflective tape from area surrounding hole(s) to be filled. Lightly sand area around holes.

3. On the helmet shell interior surface, firmly apply pressure sensitive tape over hole(s) to be filled. Ensure tape adheres to inner surface of helmet shell, if required, use a second layer of tape to provide adequate backing during the filling procedure.

3A. Mix equal amounts of epoxy part A (resin) and part B (hardener), ensuring parts A and B blend into a smooth, uniform light gray color.

4. Using a putty knife or tongue depressor, fill holes completely with the epoxy mixture. Overfilling the holes slightly will compensate for settling as the mixture dries.

5. Allow mixture to dry for approximately four hours.

6. Sand away excess mixture from the helmet shell surface.

7. Remove masking tape from helmet shell interior.

NOTE

This procedure may also be used to fill in the boom microphone swivel mount hole on the helmet shell.

8. Reinstall bayonet receivers in accordance with paragraph 4-53.

9. Install reflective tape in accordance with paragraph 4-40.

10. Document in accordance with OPNAVINST 4790.2 Series.

4-101A. REPAIR OF EDGEROLL. To repair small (under 3-inch total length) tears, splits and rips to the edgeroll leather, proceed as follows:

Materials Required

Quantity	Description	Reference Number
As Required	Moleskin, Adhesive	NIIN 01-456-2000
As Required	Thread, Nylon, Size “E”	V-T-295 NIIN 00-244-0609

NOTE

Tears, splits, and rips larger than the 3-inch limit shall be evaluated by the technician for determination of reparability. If leather is too brittle or otherwise deteriorated for repair procedures to be effective, replace the helmet shell.

1. Using size “E” nylon thread single, whip stitch or baseball stitch the raw edges of the torn, split or ripped edgeroll leather together. Secure stitching ends with a surgeon’s knot followed by a square knot.

2. Using pinking shears, cut a patch from the Moleskin material large enough to cover the damaged edgeroll area plus a 1/4-inch clearance.

3. Darken the upper surface of the Moleskin material with a black magic marker or equivalent to match the color of the edgeroll and allow to dry.

4. Remove covering over adhesive on Moleskin material and firmly press into position over the repaired area of the edgeroll.

5. Document repair in accordance with OPNAVINST 4790.2 Series.

Section 4-6. Illustrated Parts Breakdown

4-102. GENERAL.

4-103. This section lists and illustrates the procurable parts of the Fixed Wing Aircraft Helmets.

4-104. The IPB is intended for use in the identification, procurement, storing, and issuing of replacement parts. Installation, operation, and maintenance of these helmets shall only be performed by authorized personnel utilizing the instructions set forth in the preceding sections.

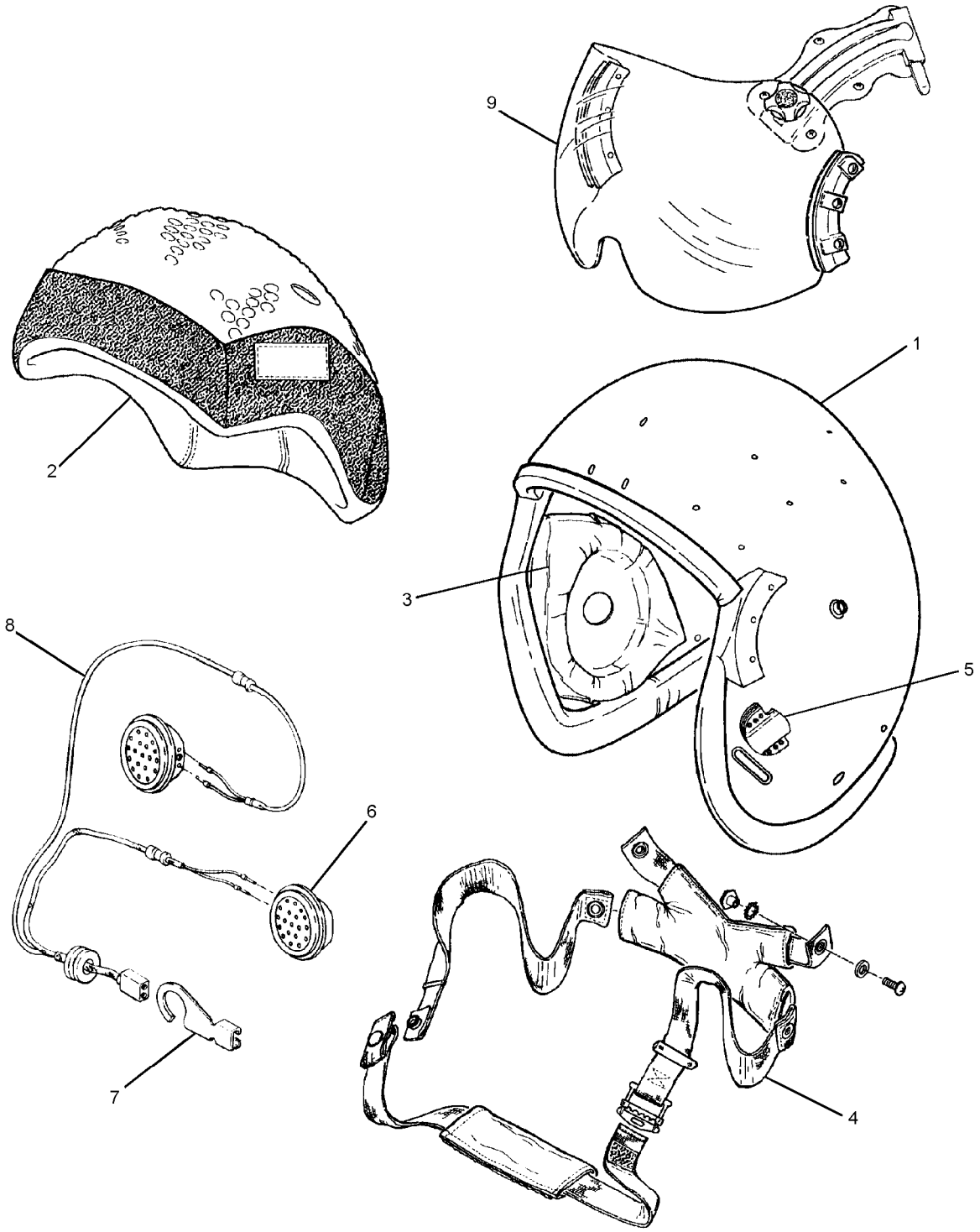

4-2-1

Figure 4-2. HGU-68(V)/P Helmet Assembly (Sheet 1 of 2)

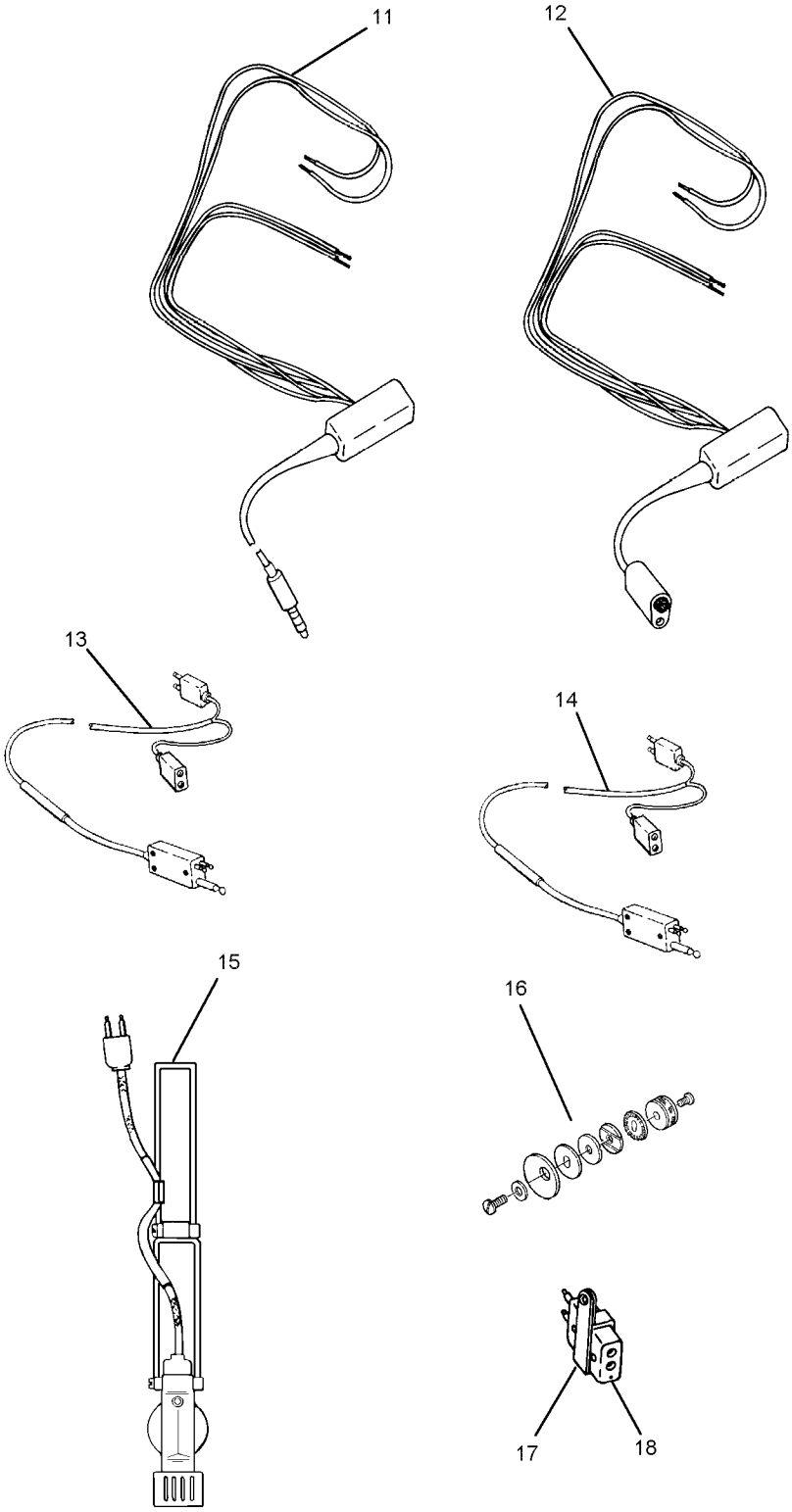

Figure 4-2. HGU-68(V)/P Helmet Assembly (Sheet 2 of 2)

Figure and Index Number	Part Number	Description 1 2 3 4 5 6 7	Units Per Assembly	Usable On Code
4-2	89D7981-1	HGU-68(V)/P HELMET ASSEMBLY, Medium	1	A
	89D7981-2	HGU-68(V)/P HELMET ASSEMBLY, Large	1	B
	89D7981-3	HGU-68(V)/P HELMET ASSEMBLY, Extra-Large . . .	1	C
-1	90A8045-1	. PRU-55/P HELMET SHELL ASSEMBLY, ... Medium (97427) (See figure 4-6 for breakdown)	1	A
	90A8045-2	. PRU-55/P HELMET SHELL ASSEMBLY, ... Large (97427) (See figure 4-6 for breakdown)	1	B
	90A8045-3	. PRU-55/P HELMET SHELL ASSEMBLY, ... Extra-Large (97427) (See figure 4-6 for breakdown)	1	C
-2	85D7087-1P	. PRU-52/P THERMOPLASTIC LINER . . . . . (TPL) ASSEMBLY, Medium (97427) (See figure 4-10 for breakdown)	1	A
	85D7087-2P	. PRU-52/P THERMOPLASTIC LINER . . . . . (TPL) ASSEMBLY, Large (97427) (See figure 4-10 for breakdown)	1	B
	85D7087-3P	. PRU-52/P THERMOPLASTIC LINER . . . . . (TPL) ASSEMBLY, Extra-Large (97427) (See figure 4-10 for breakdown)	1	C
-3	89C7735-1	. EARCUP ASSEMBLY (97427) (See . . . . . figure 4-7 for breakdown)	1	
-4	90D7916-4	. PRU-53/P CHIN/NAPE STRAP ASSEMBLY, ... Medium (97427) (See figure 4-8 for breakdown)	1	A
	90D7916-5	. PRU-53/P CHIN/NAPE STRAP ASSEMBLY, ... Large (97427) (See figure 4-8 for breakdown)	1	B
	90D7916-6	. PRU-53/P CHIN/NAPE STRAP ASSEMBLY, ... Extra-Large (97427) (See figure 4-8 for breakdown)	1	C
-5	93A8514	. BAYONET RECEIVER ASSEMBLY (97427)	1	
-6	H-87B/U	. EARPHONE	2	
-7	7136032	. MK-634/AIC CABLE CLIP	1	
-8	M22442/37-4708	. COMMUNICATION CABLE, ... CX-4708A/AIC (80063) (USE UNTIL EXHAUSTED)	1	
	89B7742	. COMMUNICATION CABLE, ... CX-4708A/AIC (MOD) (97427) (Alt for CX-4708A/AIC)	1	
-9	88B7586-2	. EEU-7/P HELMET VISOR ASSEMBLY, ... Clear and neutral (97427) (See figure 4-9 for breakdown)	1	

Figure and Index Number	Part Number	Description 1 2 3 4 5 6 7	Units Per Assembly	Usable On Code
4-2-10	Deleted			
-11	M22442/19-1	COMMUNICATION CABLE ASSEMBLY, ... CX-12972/AR (Note 1)	1	
-12	M22442/15-1	COMMUNICATION CABLE ASSEMBLY, ... CX-4832A/AR (Note 1)	1	
-13	M22442/30-1	COMMUNICATION CORDSET, ... CX-13155/A (Note 1)	1	
-14	M22442/30-2	COMMUNICATION CORDSET, ... CX-13164/A (Note 1)	1	
-15	M26542/2	BOOM MICROPHONE ASSEMBLY, M-87/AIC . . . . (Note 1)	1	
	M26542/2-01	BOOM MICROPHONE ASSEMBLY, M-87/AIC . . . . (supplied with 13 inch CX-4434/U cord) (Note 1)	1	
	M26542/2-02	BOOM MICROPHONE ASSEMBLY, M-87/AIC . . . . (supplied with 16 inch CX-4434/U cord) (Note 1)	1	
	M26542/2-03	BOOM MICROPHONE ASSEMBLY, M-87/AIC . . . . (supplied with 23 inch CX-4434/U cord) (Note 1)	1	
-16	765AS300-1	SWIVEL ASSEMBLY, Boom Microphone (Note 1) .	1	
-17	80B4881	AMPLIFIER MOUNTING BRACKET (Note 1)	1	
-18	765AS284-1	AMPLIFIER, M23595/1-2 (AM-3597C/A) (Note 1) . .	1	
	Notes: 1. Must be procured separately if required for helmet configuration.			

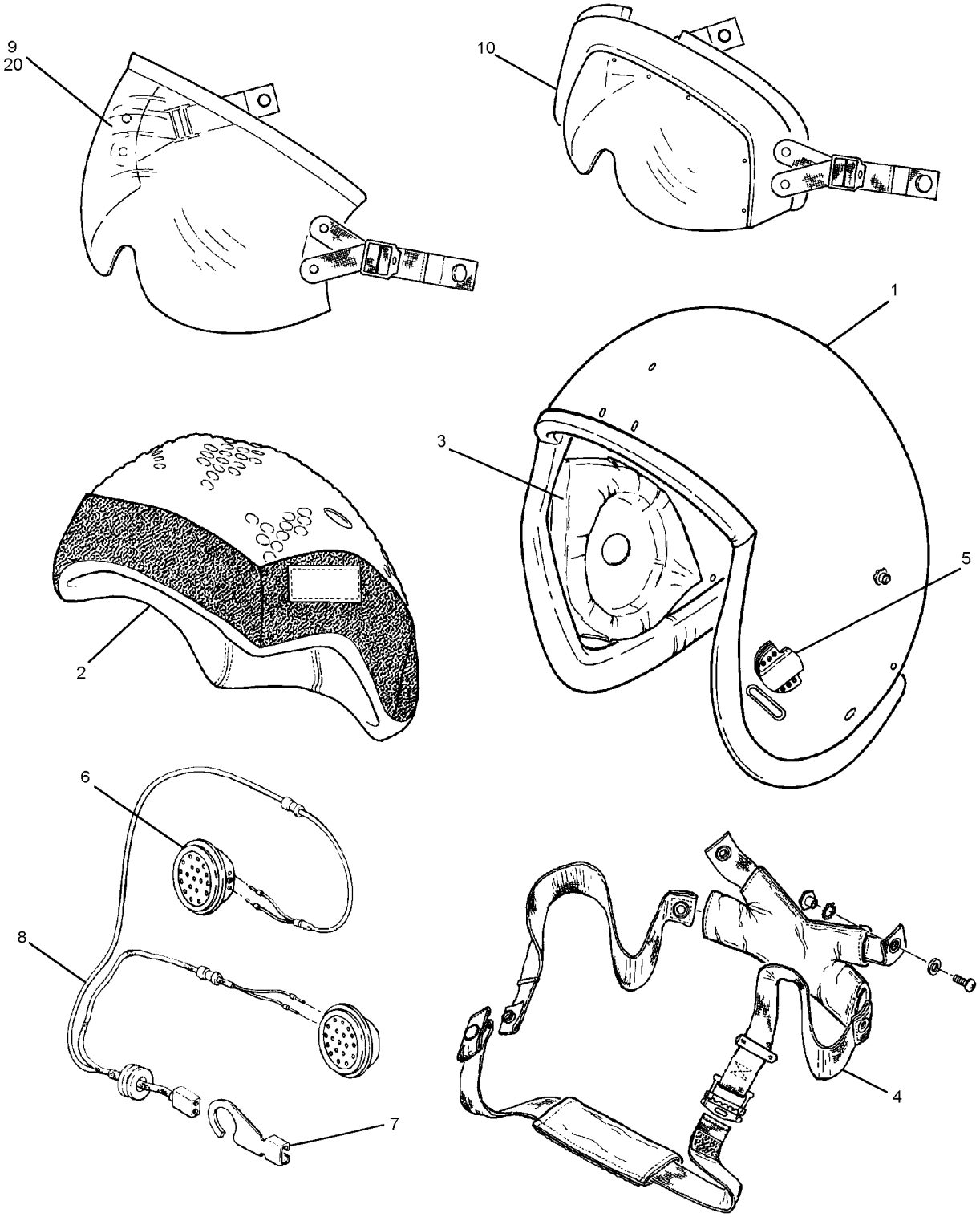

4-3-1

Figure 4-3. HGU-85(V)/P Helmet Assembly (Sheet 1 of 2)

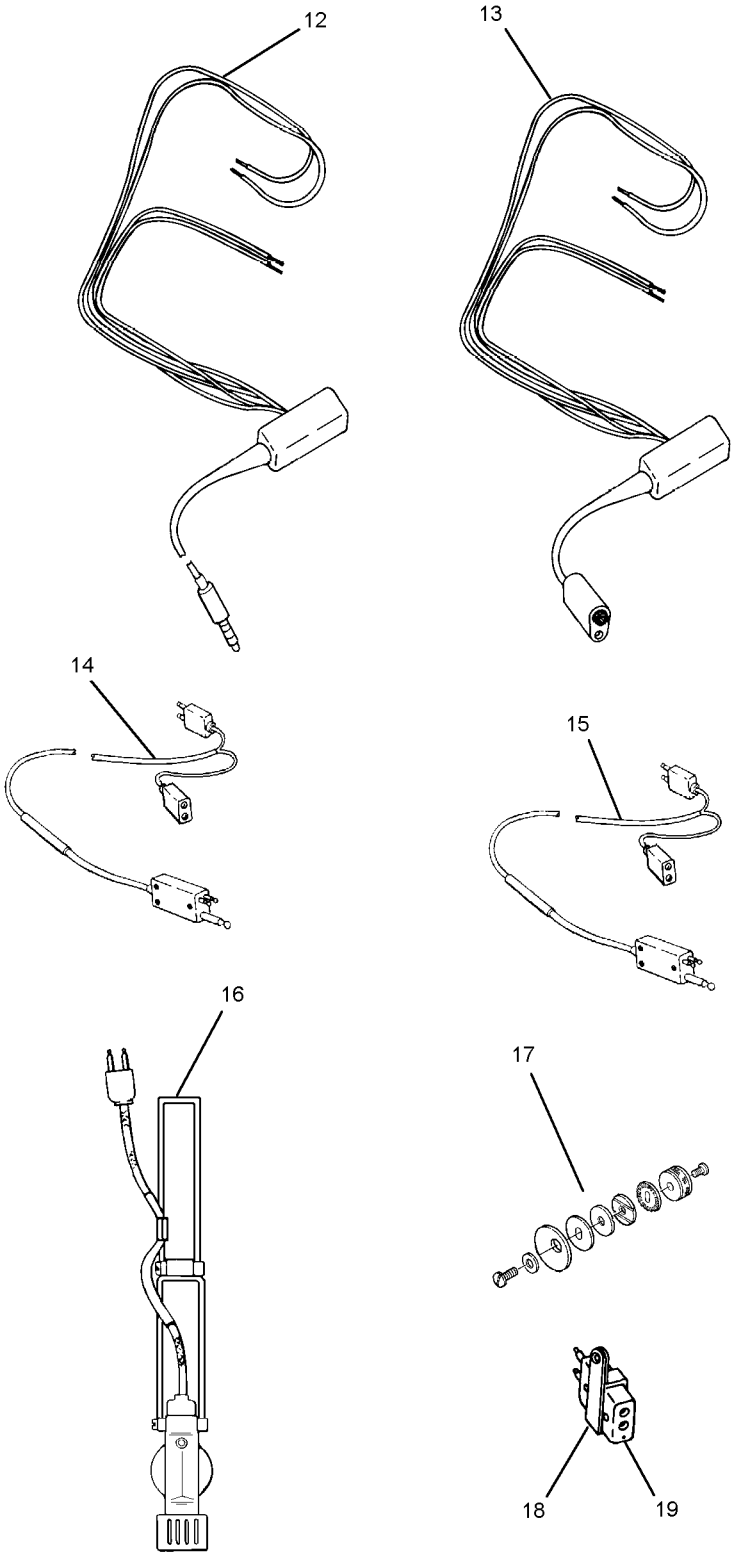

4-3-2

Figure 4-3. HGU-85(V)/P Helmet Assembly (Sheet 2 of 2)

Figure and Index Number	Part Number	Description 1 2 3 4 5 6 7	Units Per Assembly	Usable On Code
4-3	89D7981-7	HGU-85(V)/P HELMET ASSY, Medium	1	A
	89D7981-8	HGU-85(V)/P HELMET ASSY, Large	1	B
	89D7981-9	HGU-85(V)/P HELMET ASSY, Extra-Large	1	C
-1	90A8045-7	. PRU-58/P HELMET SHELL ASSY, Medium (97427)	1	A
	90A8045-8	. PRU-58/P HELMET SHELL ASSY, Large (97427)	1	B
	90A8045-9	. PRU-58/P HELMET SHELL ASSY, Extra-Large (97427)	1	C
-2	85D7087-1P	. PRU-52/P THERMOPLASTIC LINER (TPL) ASSY, Medium (97427) (See figure 4-10 for breakdown)	1	A
	85D7087-2P	. PRU-52/P THERMOPLASTIC LINER (TPL) ASSY, Large (97427) (See figure 4-10 for breakdown)	1	B
	85D7087-3P	. PRU-52/P THERMOPLASTIC LINER (TPL) ASSY, Extra-Large (97427) (See figure 4-10 for breakdown)	1	C
-3	89C7735-1	. EARCUP ASSY (97427) (See figure 4-7 for breakdown)	1	
-4	90D7916-4	. PRU-53/P CHIN/NAPE STRAP ASSY, Medium (97427) (See figure 4-8 for breakdown)	1	A
	90D7916-5	. PRU-53/P CHIN/NAPE STRAP ASSY, Large (97427) (See figure 4-8 for breakdown)	1	B
	90D7916-6	. PRU-53/P CHIN/NAPE STRAP ASSY, Extra-Large (97427) (See figure 4-8 for breakdown)	1	C
-5	93A8514	. BAYONET RECEIVER ASSEMBLY (97427)	1	
-6	H-87B/U	. EARPHONE	2	
-7	7136032	. MK-634/AIC CABLE CLIP	1	
-8	M22442/37-4708	. COMMUNICATION CABLE, CX-4708A/AIC (80063) (USE UNTIL EXHAUSTED)	1	
	89B7742	. COMMUNICATION CABLE, CX-4708A/AIC (MOD) (97427) (Alt for CX-4708A/AIC)	1	
-9	81D5189-3	. VISOR, Clear (97427) (MBU-12/P Trim)	1	
	81D5189-4	. VISOR, Neutral (97427) (MBU-12/P Trim)	1	
-10	88C7538-1	. SAFETY VISOR, Stepped in, medium (Note 1)	1	A
	88C7538-2	. SAFETY VISOR, Stepped out, medium (Note 1)	1	A
	88C7538-3	. SAFETY VISOR, Stepped in, large (Note 1)	1	B
	88C7538-4	. SAFETY VISOR, Stepped out, large (Note 1)	1	B
	88C7538-5	. SAFETY VISOR, Stepped in, extra-large (Note 1)	1	C
	88C7538-6	. SAFETY VISOR, Stepped out, extra-large (Note 1)	1	C

Figure and Index Number	Part Number	Description 1 2 3 4 5 6 7	Units Per Assembly	Usable On Code
4-3-11	Deleted			
-12	M22442/19-1	COMMUNICATION CABLE ASSEMBLY, CX-12972/A AR (Note 2)	1	
-13	M22442/15-1	COMMUNICATION CABLE ASSEMBLY, CX-4832A/A AR (Note 2)	1	
-14	M22442/30-1	COMMUNICATION CORDSET, CX-13155/A A (Note 2)	1	
-15	M22442/30-2	COMMUNICATION CORDSET, CX-13164/A A (Note 2)	1	
-16	M26542/2	BOOM MICROPHONE ASSEMBLY, M-87/AIC (Note 2)	1	
	M26542/2-01	BOOM MICROPHONE ASSEMBLY, M-87/AIC (supplied with 13 inch CX-4434/U cord) (Note 2)	1	
	M26542/2-02	BOOM MICROPHONE ASSEMBLY, M-87/AIC (supplied with 16 inch CX-4434/U cord) (Note 2)	1	
	M26542/2-03	BOOM MICROPHONE ASSEMBLY, M-87/AIC (supplied with 23 inch CX-4434/U cord) (Note 2)	1	
-17	765AS300-1	SWIVEL ASSEMBLY, Boom Microphone (Note 2)	1	
-18	80B4881	AMPLIFIER MOUNTING BRACKET (Note 2)	1	
-19	765AS284-1	AMPLIFIER, M23595/1-2 (AM-3597C/A) (Note 2)	1	
-20	80D5189-11	VISOR, Gradient Lens (MBU-12/P Trim) (Note 3)	1	
	GW9750	VISOR, Neodymium Laser Eye Protective (MBU-12/P Trim) (Note 3)	1	
	85D7139-6	VISOR, Amber Lens (MBU-12/P Trim) (Note 3)	1	
	89D7697-1	VISOR, Clear Lens (MBU-23/P-24/P Trim)	1	
	89D7697-2	VISOR, Neutral Lens (MBU-23/P-24/P Trim)	1	
	GW9142-06	VISOR, Neodymium Laser Eye Protective (MBU-23/P-24/P Trim) (Note 3)	1	
	92A8058-2	VISOR, Gradient Lens (MBU-23/P-24/P Trim) (Note 3)	1	
	92A8058-5	VISOR, Amber Lens (MBU-23/P-24/P Trim) (Note 3)	1	
	GW9652-01	SAFETY VISOR, Reduced Profile, Stepped-In, Clear, Medium (MBU-23/P-24/P Trim) (Note 3)	1	
	GW9652-03	SAFETY VISOR, Reduced Profile, Stepped-In, Clear, Large/Extra-Large (MBU-23/P-24/P Trim) (Note 3)	1	
	GW9652-05	VISOR, Neodymium, Reduced Profile, Stepped-In, Medium (MBU-23/P-24/P Trim) (Note 3)	1	
	GW9652-07	VISOR, Neodymium, Reduced Profile, Stepped-In, Large/Extra-Large (MBU-23/P-24/P Trim) (Note 3)	1	

THIS PAGE INTENTIONALLY LEFT BLANK.

Figure and Index Number	Part Number	Description 1 2 3 4 5 6 7	Units Per Assembly	Usable On Code
4-3-20 (cont)	GW9651-01	SAFETY VISOR, Reduced Profile, Stepped-In, ... Medium (MBU-12/P Trim) (Note 3)	1	
	GW9651-03	SAFETY VISOR, Reduced Profile, Stepped-In, ... Large (MBU-12/P Trim) (Note 3)	1	
	GW9651-05	SAFETY VISOR, Reduced Profile, Stepped-In, ... Extra-Large (MBU-12/P Trim) (Note 3)	1	
	GW9651-09	VISOR, Neodymium, Reduced Profile, Stepped-In, . . . Medium (MBU-12/P Trim) (Note 3)	1	
	GW9651-11	VISOR, Neodymium, Reduced Profile, Stepped-In, . . . Large (MBU-12/P Trim) (Note 3)	1	
	GW9651-13	VISOR, Neodymium, Reduced Profile, Stepped-In, . . . Extra-Large (MBU-12/P Trim) (Note 3)	1	

Notes:
1. Part Numbers 88C7538-1 through 88C7538-6 are authorized for use with the AN/AVS-9 NVIIS.
2. Must be procured separately if required for helmet configuration.
3. Special purpose visors with reference numbers beginning with GW, are commercially available from Gentex Western Operations, Rancho Cucamonga, CA., 91730 Telephone (909) 481-7667 (at menu prompt, choose USN MBU-23/P Order Desk). All other special purpose visors are commercially available from Gentex Corporation, Carbondale PA, 18470 Telephone (570) 282-8505.

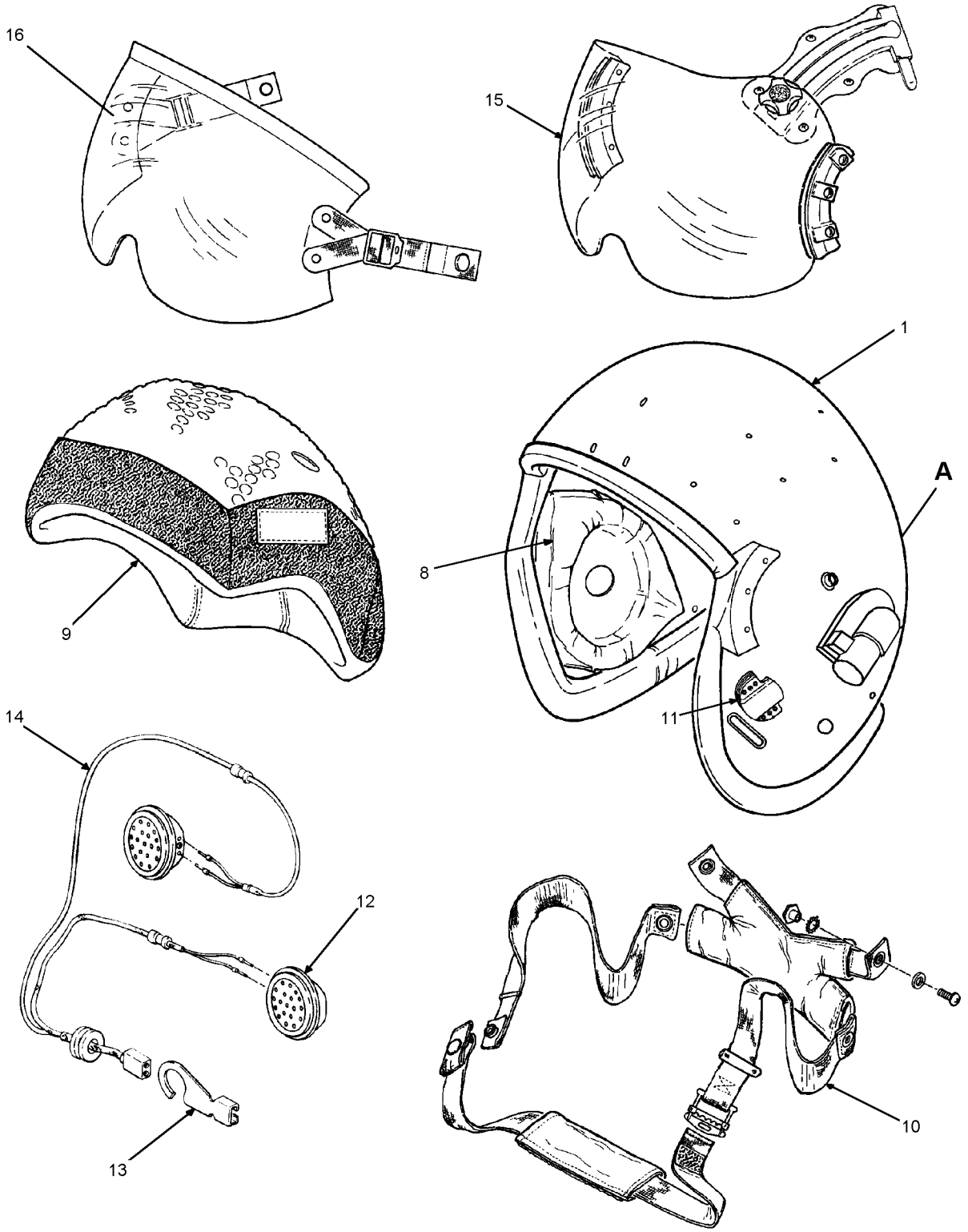

4-4-1

Figure 4-4. HGU-87(V)/P22P-16 Aircrew Protective Helmet (Sheet 1 of 2)

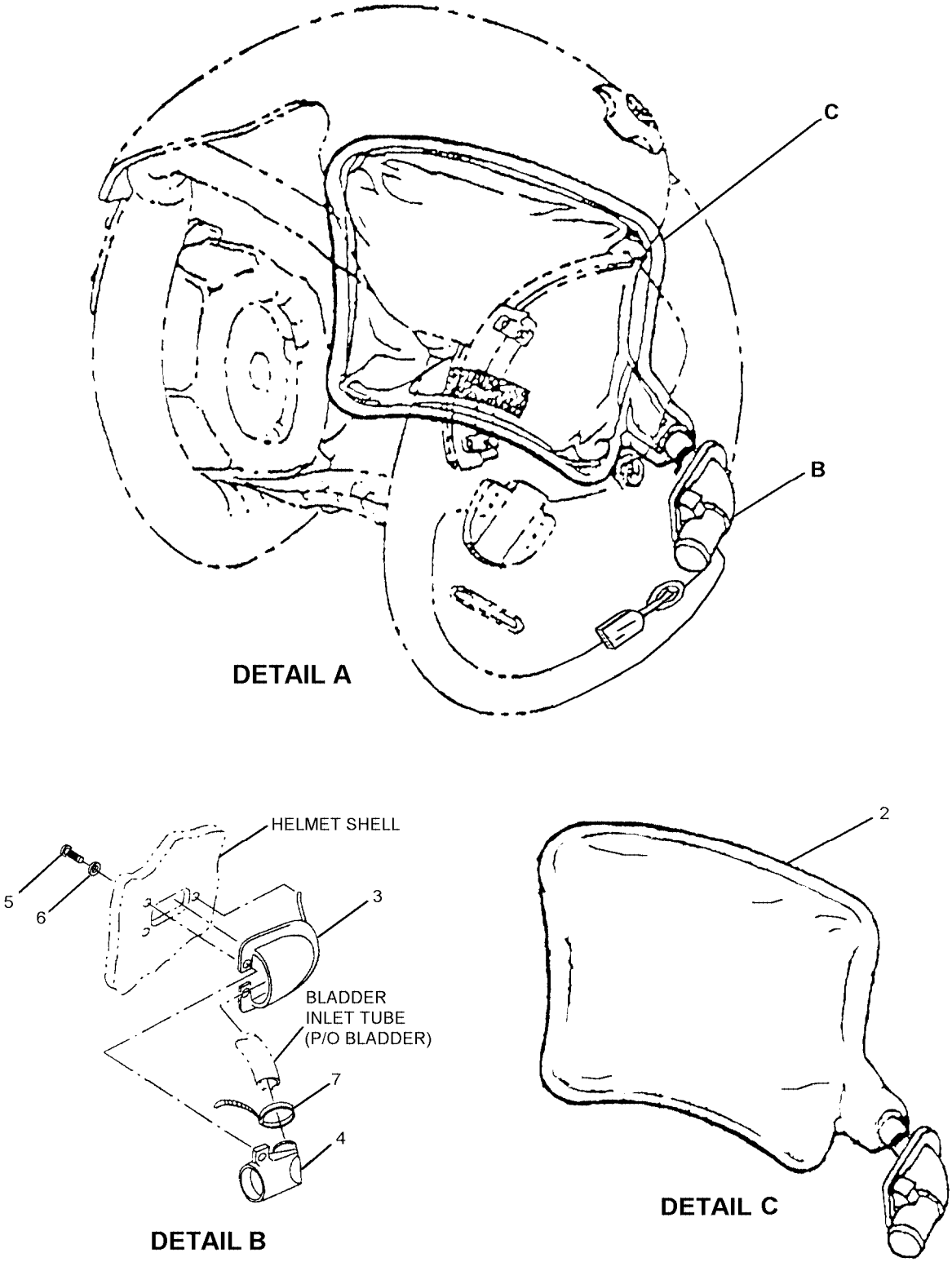

4-4-2

Figure 4-4. HGU-87(V)/P22P-16 Aircrew Protective Helmet (Sheet 2 of 2)

Figure and Index Number	Part Number	Description 1 2 3 4 5 6 7	Units Per Assembly	Usable On Code
4-4	95B9088-1	HGU-87(V)/P22P-16 PROTECTIVE HELMET ASSEMBLY, Medium	REF	A
	95B9088-2	HGU-87(V)/P22P-16 PROTECTIVE HELMET ASSEMBLY, Large	REF	B
	95B9088-3	HGU-87(V)/P22P-16 PROTECTIVE HELMET ASSEMBLY, Extra-Large	REF	C
-1	90A8045-1	. PRU-55/P HELMET SHELL ASSEMBLY Medium (97427)	1	A
	90A8045-2	. PRU-55/P HELMET SHELL ASSEMBLY Large (97427)	1	B
	90A8045-3	. PRU-55/P HELMET SHELL ASSEMBLY Extra-Large (97427) (See figure 4-6 for breakdown)	1	C
-2	93C8611-1	. KMU-561/P22P-16 BLADDER ASSEMBLY	1	
-3	89C7667-1	. COVER, Connector, Bladder inlet	1	
-4	92B8414-1	. CONNECTOR, Bladder inlet	1	
		(ATTACHING PARTS)	1	
-5	MS51957-14B	. SCREW, Panhead	2	
-6	MS35333-70	. WASHER, Lock	2	
		---*---	1	
-7	MS3367-4-0	. STRAP, Tiedown	1	
-8	89C7735-1	. EARCUP ASSEMBLY (See figure 4-7 for breakdown)	1	
-9	85D7087-1P	. PRU-52/P THERMOPLASTIC LINER (TPL) ASSEMBLY, Medium (97427)	1	A
	85D7087-2P	. PRU-52/P THERMOPLASTIC LINER (TPL) ASSEMBLY, Large (97427)	1	B
	85D7087-3P	. PRU-52/P THERMOPLASTIC LINER (TPL) ASSEMBLY, Extra-Large (97427) (See figure 4-10 for breakdown)	1	C
-10	90D7916-4	. PRU-53/P CHIN/NAPE STRAP ASSEMBLY, Medium (97427)	1	A
	90D7916-5	. PRU-53/P CHIN/NAPE STRAP ASSEMBLY, Large (97427)	1	B
	90D7916-6	. PRU-53/P CHIN/NAPE STRAP ASSEMBLY, Extra-Large (97427) (See figure 4-8 for breakdown)	1	C
-11	93A8514	. BAYONET RECEIVER ASSEMBLY (97427)	1	
-12	H-87B/U	. EARPHONE	2	
-13	7136032	. MK-634/AIC CABLE CLIP	1	
-14	M22442/37-4708	. COMMUNICATIONS CABLE, CX-4708A/AIC (Mod) (97427)	1	
-15	88B7586-2	. EEU-7/P HELMET VISOR ASSEMBLY, Clear and Neutral (97427) (See figure 4-9 for breakdown)	1	

Figure and Index Number	Part Number	Description 1 2 3 4 5 6 7	Units Per Assembly	Usable On Code
4-4-16	89D7697-1	VISOR, Clear Lens (MBU-23/P-24/P Trim) . . . . . (Note 1)	1	
	89D7697-2	VISOR, Neutral Lens (MBU-23/P-24/P Trim) . . . . . (Note 1)	1	
	GW9142-06	VISOR, Neodymium Laser Eye Protective . . . . . (MBU-23/P-24/P Trim) (Note 2)	1	
	92A8058-2	VISOR, Gradient Lens (MBU-23/P-24/P Trim) . . . . . (Note 2)	1	
	92A8058-5	VISOR, Amber Lens (MBU-23/P-24/P Trim) . . . . . (Note 2)	1	
	GW9652-01	SAFETY VISOR, Reduced Profile, Stepped-In, ... Clear, Medium (MBU-23/P-24/P Trim) (Note 2)	1	
	GW9652-03	SAFETY VISOR, Reduced Profile, Stepped-In, ... Clear, Large/Extra-Large (MBU-23/P-24/P Trim) (Note 2)	1	
	GW9652-05	VISOR, Neodymium, Reduced Profile, Stepped-In, ... Medium (MBU-23/P-24/P Trim) (Note 2)	1	
	GW9652-07	VISOR, Neodymium, Reduced Profile, Stepped-In, ... Large/Extra-Large (MBU-23/P-24/P Trim) (Note 2)	1	
	Notes: 1. Visors 89D7697-1 and -2 are available through the supply system. 2. Special purpose visors with reference numbers beginning with GW, are commercially available from Gentex Western Operations, Rancho Cucamonga, CA., 91730 Telephone (909) 481-7667 (at menu prompt, choose USN MBU-23/P Order Desk). All other special purpose visors are commercially available from Gentex Corporation, Carbondale PA, 18470 Telephone (570) 282-8505.			

THIS PAGE INTENTIONALLY LEFT BLANK.

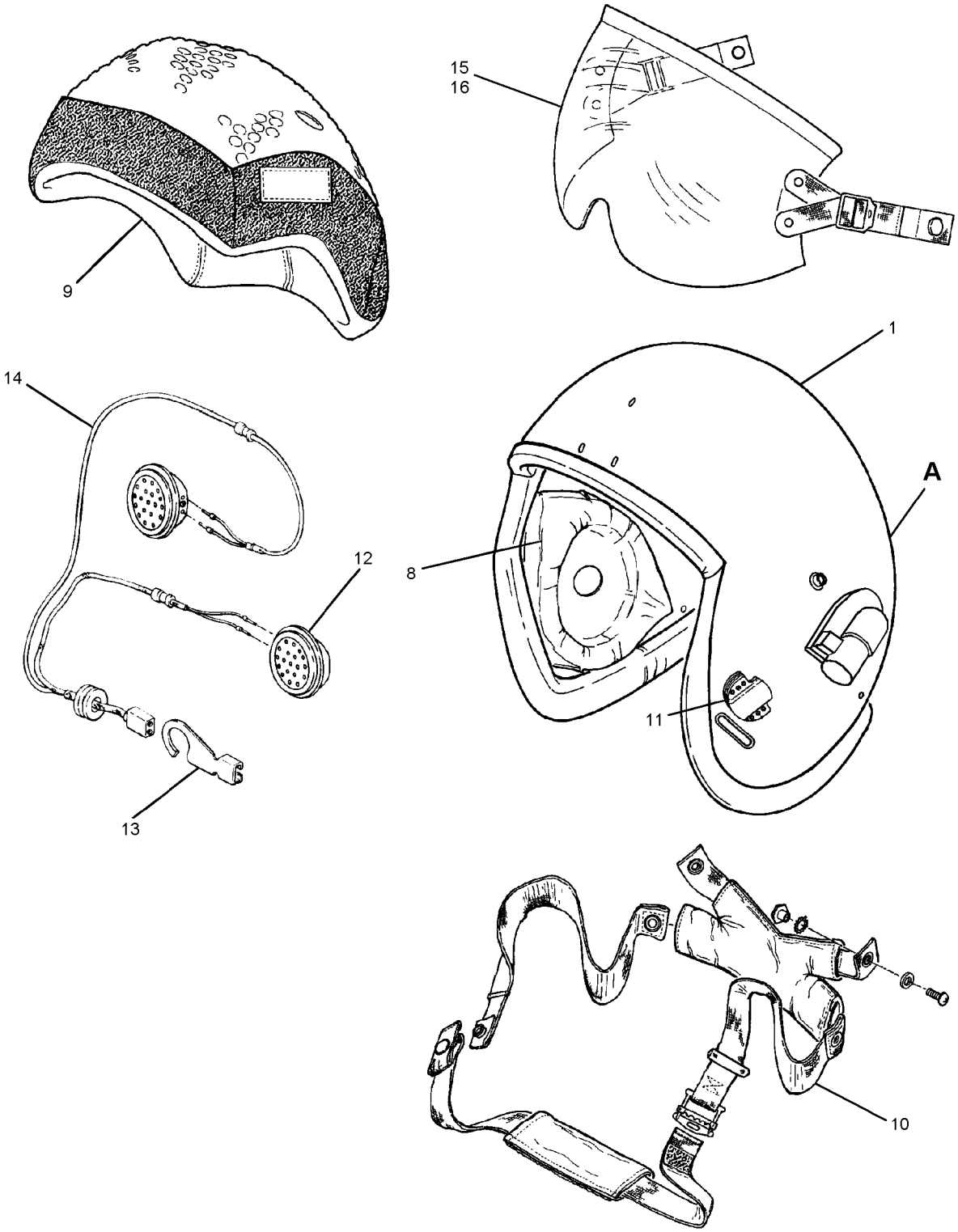

4-5-1

Figure 4-5. HGU-89/P22P-16 Aircrew Protective Helmet (Sheet 1 of 2)

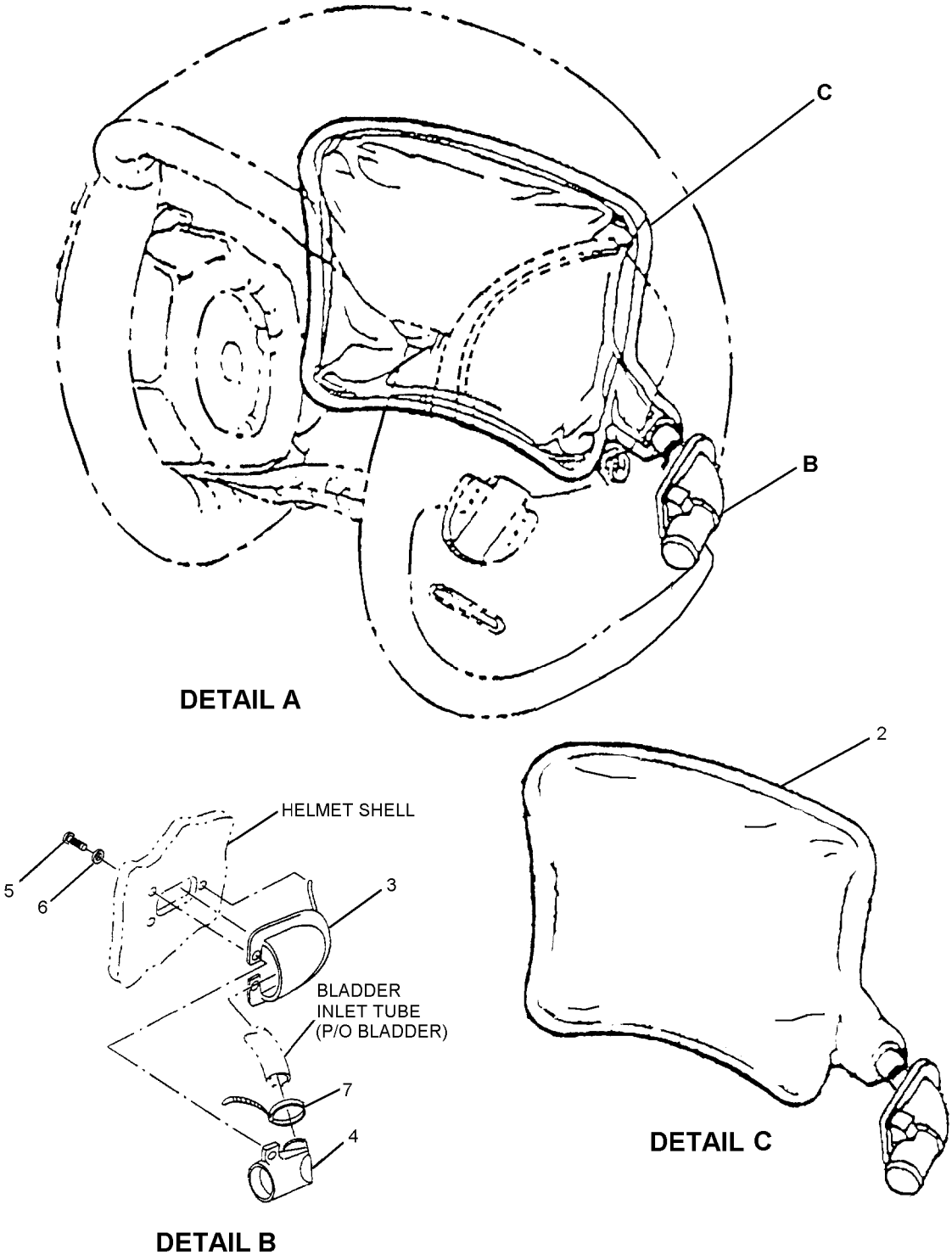

4-5-2

Figure 4-5. HGU-89/P22P-16 Aircrew Protective Helmet (Sheet 2 of 2)

Figure and Index Number	Part Number	Description 1 2 3 4 5 6 7	Units Per Assembly	Usable On Code
4-5	95B9088-7	HGU-89/P22P-16 PROTECTIVE HELMET ..... ASSEMBLY, Medium	REF	A
	95B9088-8	HGU-89/P22P-16 PROTECTIVE HELMET ..... ASSEMBLY, Large	REF	B
	95B9088-9	HGU-89/P22P-16 PROTECTIVE HELMET ..... ASSEMBLY, Extra-Large	REF	C
-1	90A8045-7	. PRU-58/P HELMET SHELL ASSEMBLY ..... Medium (97427)	1	A
	90A8045-8	. PRU-58/P HELMET SHELL ASSEMBLY ..... Large (97427)	1	B
	90A8045-9	. PRU-58/P HELMET SHELL ASSEMBLY ..... Extra-Large (97427)	1	C

THIS PAGE INTENTIONALLY LEFT BLANK.

Figure and Index Number	Part Number	Description 1 2 3 4 5 6 7	Units Per Assembly	Usable On Code
4-5-2	93C8611-1	. KMU-561/P22P-16 BLADDER ASSEMBLY	1	
-3	89C7667-1	. COVER, Connector, Bladder inlet	1	
-4	92B8414-1	. CONNECTOR, Bladder inlet	1	
		(ATTACHING PARTS)	1	
-5	MS51957-14B	. SCREW, Panhead	2	
-6	MS35333-70	. WASHER, Lock	2	
		---*---	1	
-7	MS3367-4-0	. STRAP, Tiedown	1	
-8	89C7735-1	. EARCUP ASSEMBLY (See figure 4-7 . . . . . for breakdown)	1	
-9	85D7087-1P	. PRU-52/P THERMOPLASTIC LINER (TPL) . . . . . ASSEMBLY, Medium (97427)	1	A
	85D7087-2P	. PRU-52/P THERMOPLASTIC LINER (TPL) . . . . . ASSEMBLY, Large (97427)	1	B
	85D7087-3P	. PRU-52/P THERMOPLASTIC LINER (TPL) . . . . . ASSEMBLY, Extra-Large (97427) (See figure 4-10 for breakdown)	1	C
-10	90D7916-4	. PRU-53/P CHIN/NAPE STRAP ASSEMBLY, ... Medium (97427)	1	A
	90D7916-5	. PRU-53/P CHIN/NAPE STRAP ASSEMBLY, ... Large (97427)	1	B
	90D7916-6	. PRU-53/P CHIN/NAPE STRAP ASSEMBLY, ... Extra-Large (97427) (See figure 4-8 for breakdown)	1	C
-11	93A8514	. BAYONET RECEIVER ASSEMBLY (97427)	1	
-12	H-87B/U	. EARPHONE	2	
-13	7136032	. MK-634/AIC CABLE CLIP	1	
-14	M22442/37-4708	. COMMUNICATIONS CABLE, ... CX-4708A/AIC (Mod) (97427)	1	
-15	89D7697-1	. VISOR, Clear Lens (MBU-23/P-24/P Trim)	1	
	89D7697-2	. VISOR, Neutral Lens (MBU-23/P-24/P Trim)	1	
-16	GW9142-06	VISOR, Neodymium Laser Eye Protective . . . . . (MBU-23/P-24/P Trim) (Note 1)	1	
	92A8058-2	VISOR, Gradient Lens (MBU-23/P-24/P Trim) (Note 1) . .	1	
	92A8058-5	VISOR, Amber Lens (MBU-23/P-24/P Trim) (Note 1) .	1	
	GW9652-01	SAFETY VISOR, Reduced Profile, Stepped-In, ... Clear, Medium (MBU-23/P-24/P Trim) (Note 1)	1	
	GW9652-03	SAFETY VISOR, Reduced Profile, Stepped-In, ... Clear, Large/Extra-Large (MBU-23/P-24/P Trim) (Note 1)	1	
	GW9652-05	VISOR, Neodymium, Reduced Profile, Stepped-In, ... Medium (MBU-23/P-24/P Trim) (Note 1)	1	
	GW9652-07	VISOR, Neodymium, Reduced Profile, Stepped-In, ... Large/Extra-Large (MBU-23/P-24/P Trim) (Note 1)	1	

Notes: 1. Special purpose visors with reference numbers beginning with GW, are commercially available from Gentex Western Operations, Rancho Cucamonga, CA., 91730 Telephone (909) 481-7667 (at menu prompt, choose USN MBU-23/P Order Desk). All other special purpose visors are commercially available from Gentex Corporation, Carbondale PA, 18470 Telephone (570) 282-8505.

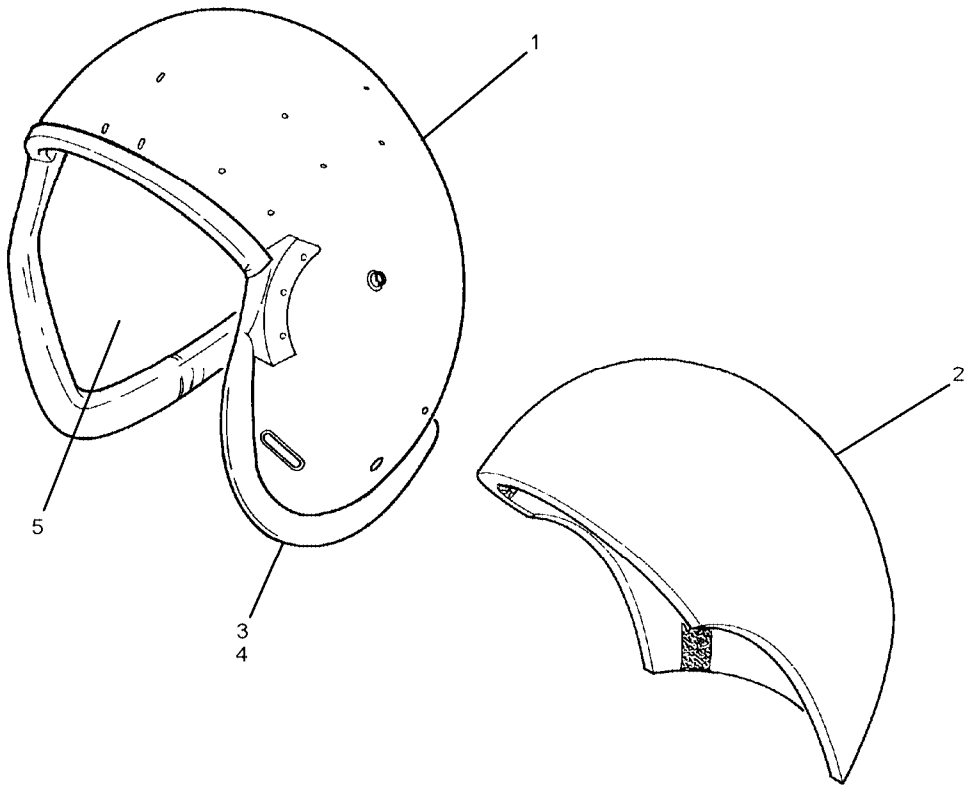

4-6

Figure 4-6. PRU-55/P Helmet Shell Assembly

Figure and Index Number	Part Number	Description 1 2 3 4 5 6 7	Units Per Assembly	Usable On Code
4-6	90A8045-1	PRU-55/P HELMET SHELL ASSEMBLY, Medium (97427)	1	A
	90A8045-2	PRU-55/P HELMET SHELL ASSEMBLY, Large (97427)	1	B
	90A8045-3	PRU-55/P HELMET SHELL ASSEMBLY, Extra-Large (97427)	1	C
-1	90D7997-1	. HELMET SHELL, Medium, Single Visor	1	A
	90D7998-1	. HELMET SHELL, Large, Single Visor	1	B
	90D7999-1	. HELMET SHELL, Extra-Large, Single Visor	1	C
-2	90C8006-1	. ENERGY ABSORBING LINER, Medium	1	A
	90C8006-2	. ENERGY ABSORBING LINER, Large	1	B
	90C8006-3	. ENERGY ABSORBING LINER, Extra-Large	1	C
-3	83C6628-1	. EDGEROLL CORE	1	
-4	90D7967M	. EDGEROLL LEATHER SET, Medium, Black	1	A
	90D7967L	. EDGEROLL LEATHER SET, Large, Black	1	B
	90D7967XL	. EDGEROLL LEATHER SET, Extra-Large, Black	1	C
-5	90C7968M	. EARSHELL PILE FASTENER SET, Medium	1	A
	90C7968L	. EARSHELL PILE FASTENER SET, Large	1	B
	90C7968XL	. EARSHELL PILE FASTENER SET, Extra-Large	1	C

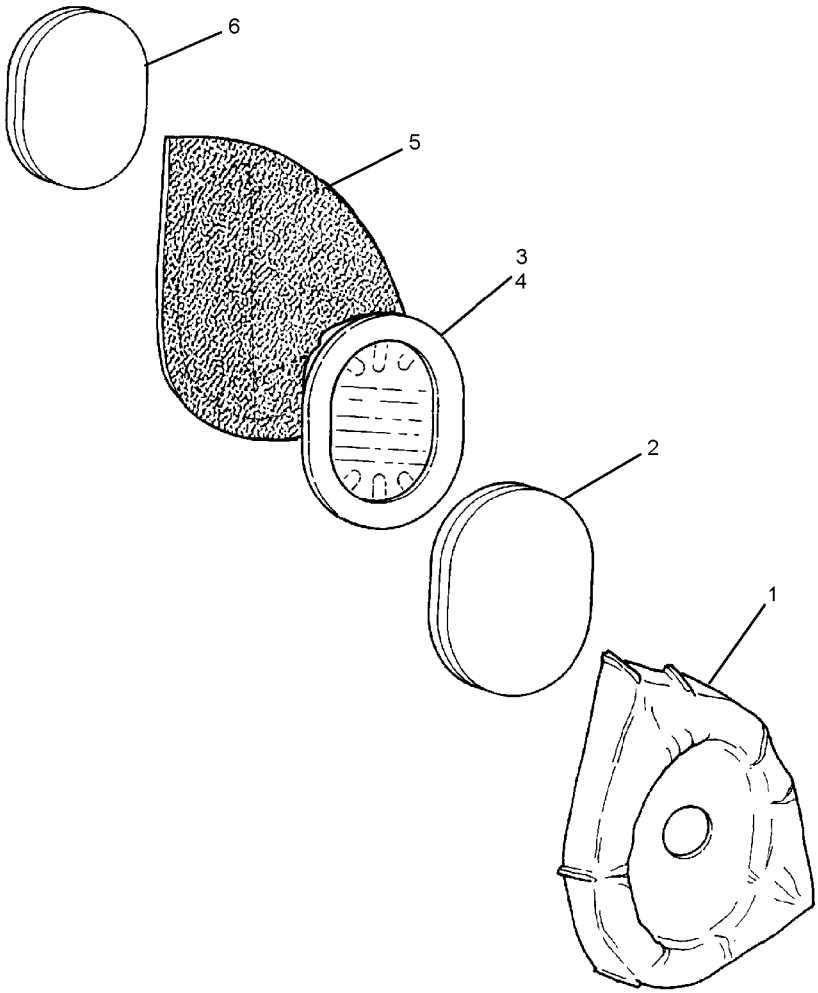

Figure 4-7. Earcup Assembly

Figure and Index Number	Part Number	Description 1 2 3 4 5 6 7	Units Per Assembly	Usable On Code
4-7	89C7735-1	EARCUP ASSEMBLY (97427) (Note 1)	1	
-1	88D7554-1	. EARPAD SET, LH and RH (Note 2)	1	
-2	79C4401	. EARPHONE HOLDER	2	
-3	88C7540-1	. EARCUP, LH	1	
-4	88C7540-2	. EARCUP, RH	1	
-5	90C8015	. EARPAD BACKER (Note 2)	2	
-6	67B1721-10	. FITTING PAD SET	1	

Notes: 1. The Oregon Aero Hush Kit Combo is an authorized optional replacement item for use in place of the earcup assembly. To order, use Oregon Areo P/N 28034, Hush Kit Combo, 3/4 inch, or P/N 28118, Hush Kit Combo, 1 1/8 inch.

2. The Oregon Aero Softseal Ear Cushions are authorized optional replacement items for use in place of the earpad set and earpad backer. To order, use P/N 20050, 3/4 inch, or P/N 20025, 1 1/8 inch.

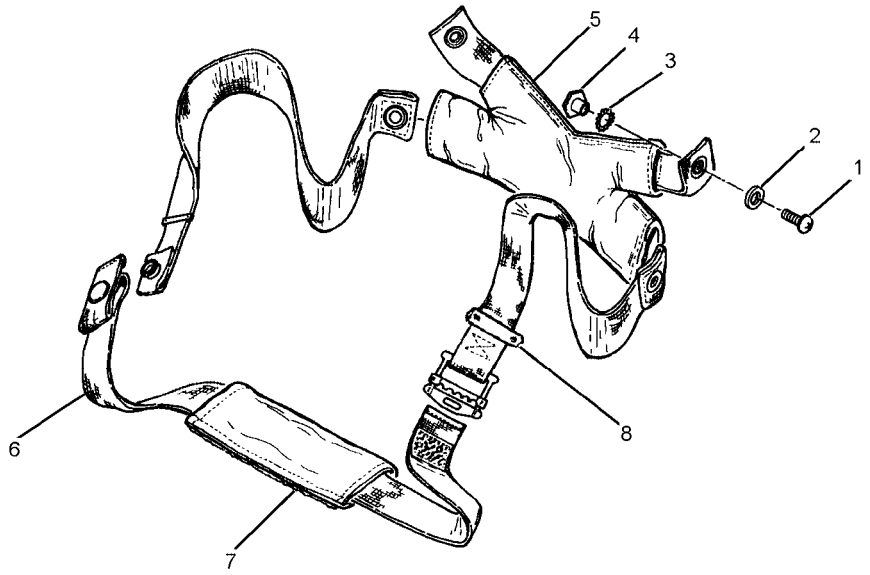

4-8

Figure 4-8. PRU-53/P Chin/Nape Strap Assembly

Figure and Index Number	Part Number	Description 1 2 3 4 5 6 7	Units Per Assembly	Usable On Code
4-8	90D7916-4	PRU-53/P CHIN/NAPE STRAP ASSEMBLY, ... Medium (97427)	1	A
	90D7916-5	PRU-53/P CHIN/NAPE STRAP ASSEMBLY, ... Large (97427)	1	B
	90D7916-6	PRU-53/P CHIN/NAPE STRAP ASSEMBLY, ... Extra-Large (97427)	1	C
-1	MS51958-61B	. PAN HEAD, Screw, 10-32 x 3/8	2	
-2	77A3612-4	. FLAT WASHER, #10, Black	2	
-3	MS35335-34	. LOCK WASHER, Ext. tooth, 5/16	2	
-4	79A4436	. FLANGED NUT, 10-32	2	
-5	84D6899-1	. NAPE PAD, Medium	1	A
	84D6899-2	. NAPE PAD, Large	1	B
	84D6899-3	. NAPE PAD, Extra-Large	1	C
-6	84C6708	. CHIN STRAP ASSEMBLY	1	
-7	89C7764-1	. CHIN PAD, Black	1	
-8	93B8471	. CLAMP	2	

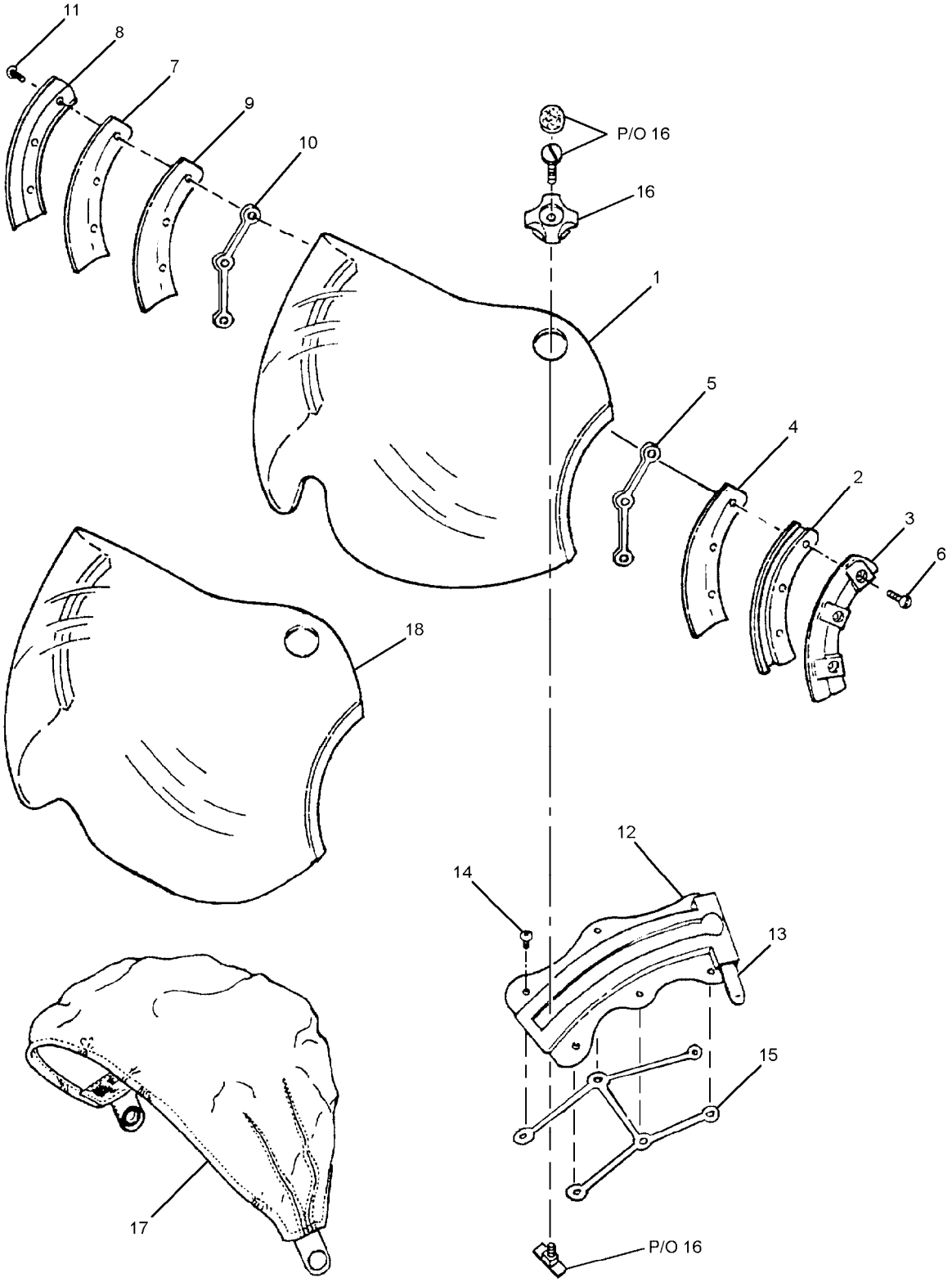

4-9

Figure 4-9. EEU-7/P Helmet Visor Assembly

Figure and Index Number	Part Number	Description 1 2 3 4 5 6 7	Units Per Assembly	Usable On Code
4-9	88B7586-2	EEU-7/P VISOR ASSEMBLY, Neutral/Clear (97427)	REF	
-1	90D7972-1	. LENS, Visor, Neutral (MBU-12/P Trim)	1	
	90D7972-2	. LENS, Visor, Clear (MBU-12/P Trim)	1	
-2	61C846-2L	. TRACK, Visor, LH	1	
-3	90C7974-1	. RETAINER, Track, LH	1	
-4	93D8532-1	. SPACER	1	
		(ATTACHING PARTS FOR ITEMS 2 THRU 4)		
-5	94A8676-1L	. POST RETAINER ASSEMBLY, LH	1	
	94A8676-2L	. POST RETAINER ASSEMBLY, LH	1	
-6	MS51957-31B	. SCREW, Pan head	3	
	93A8479	. SCREW, Pan head, Mid and bottom positions	2	
	MS51957-32B	. SCREW, Pan head, Top position	1	
		---*---		
-7	61C846-2R	. TRACK, Visor, RH	1	
-8	90C7974-2	. RETAINER, Track, RH	1	
-9	93D8532-2	. SPACER	1	
		(ATTACHING PARTS FOR ITEMS 7 THRU 9)		
-10	94A8676-1R	. POST RETAINER ASSEMBLY, RH	1	
	94A8676-2R	. POST RETAINER ASSEMBLY, RH	1	
-11	MS51957-31B	. SCREW, Pan head	3	
	93A8479	. SCREW, Pan head, Mid and bottom positions	2	
	MS51957-32B	. SCREW, Pan head, Top position	1	
		---*---		
-12	90C7985	. LOCKING GUIDE, Visor	1	
-13	91B8152	. LOCKING PLATE	1	
		(ATTACHING PARTS)		
-14	92A8241-1	. SCREW, Blind head	6	
-15	94A8675	. RETAINER ASSEMBLY	1	
		---*---		
-16	96B9367	. LOCK ASSEMBLY (Note 2)	1	
-17	90D7985	. LENS COVER, Leather	1	
-18	90D7972-5	LENS, Visor, Clear, EEU-7/P (MBU-23/P-24/P Trim)	1	
	90D7972-4	LENS, Visor, Neutral, EEU-7/P (MBU-23/P-24/P Trim)	1	
	GW9654-01	LENS, Visor, Neodymium Laser Eye Protective (MBU-12/P Trim) (Note 1)	1	
	GW9654-02	LENS, Visor, Neodymium Laser Eye Protective (MBU-23/P-24/P Trim) (Note 1)	1	
	97A10037-1	LENS, Visor, Amber (MBU-12/P Trim) (Note 1)	1	
	97A10037-2	LENS, Visor, Amber (MBU-23/P-24/P Trim) (Note 1)	1	
	97A10037-3	LENS, Visor, Gradient (MBU-12/P Trim) (Note 1)	1	

Figure and Index Number	Part Number	Description 1 2 3 4 5 6 7	Units Per Assembly	Usable On Code
4-9-18 (cont)	97A10037-4	LENS, Visor, Gradient (MBU-23/P-24/P Trim) . . . . . . (Note 1)	1	
	Notes: 1. Special purpose visors with reference numbers beginning with GW, are commercially available from Gentex Western Operations, Rancho Cucamonga, CA., 91730 Telephone (909) 481-7667 (at menu prompt, choose USN MBU-23/P Order Desk). All other special purpose visors are commercially available from Gentex Corporation, Carbondale PA, 18470 Telephone (570) 282-8505. 2. Lock Assembly, part number 96B9367 is commercially procurable from GENTEX Corp., Carbondale, PA 18470. Telephone (570) 282-8505.			

THIS PAGE INTENTIONALLY LEFT BLANK.

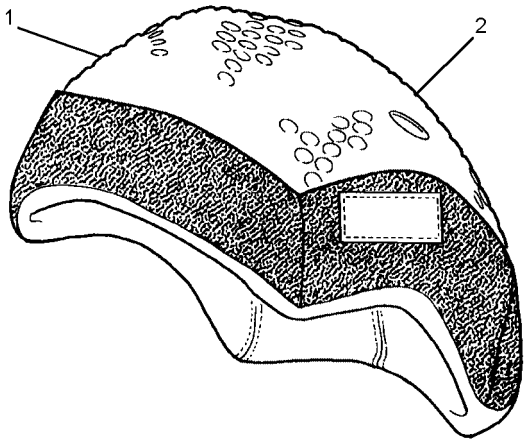

4-10

Figure 4-10. PRU-52/P Thermoplastic Liner (TPL) Assembly

Figure and Index Number	Part Number	Description 1 2 3 4 5 6 7	Units Per Assembly	Usable On Code
4-10	85D7087-1P	PRU-52/P THERMOPLASTIC LINER (TPL) . . . . . ASSEMBLY, Medium (97427) (Note 1)	1	A
	85D7087-2P	PRU-52/P THERMOPLASTIC LINER (TPL) . . . . . ASSEMBLY, Large (97427) (Note 1)	1	B
	85D7087-3P	PRU-52/P THERMOPLASTIC LINER (TPL) . . . . . ASSEMBLY, Extra-Large (97427) (Note 1)	1	C
-1	85D7088-1	. COVER ASSEMBLY, Medium	1	A
	85D7088-2	. COVER ASSEMBLY, Large	1	B
	85D7088-3	. COVER ASSEMBLY, Extra-Large	1	C
-2	88D7518-1	. LAYER ASSEMBLY, Medium	1	A
	88D7518-2	. LAYER ASSEMBLY, Large	1	B
	88D7518-3	. LAYER ASSEMBLY, Extra-Large	1	C
-3	85D7027	. FASTENER TAPE, Hook (Not illustrated)	1	
	Notes: 1. Oregon Aero Zetaliners are authorized optional replacements for the TPL assembly. To order use Oregon Aero P/N 95132, 3, 4, 5 (medium); 95142, 3, 4, 5 (large); 95152, 3, 4, 5 (extra large); 95162, 3, 4, 5 (extra large wide) NIINs TBD			

NUMERICAL INDEX

Part Number	Figure and Index Number	SM&R Code
GW9142-06	4-3-20	
	4-4-16	
	4-5-16	
GW9651-01	4-3-20	
GW9651-03	4-3-20	
GW9651-05	4-3-20	
GW9651-09	4-3-20	
GW9651-11	4-3-20	
GW9651-13	4-3-20	
GW9652-01	4-3-20	
	4-4-16	
	4-5-16	
GW9652-03	4-3-20	
	4-4-16	
	4-5-16	
GW9652-05	4-3-20	
	4-4-16	
	4-5-16	
GW9652-07	4-3-20	
	4-4-16	
	4-5-16	
GW9654-01	4-9-18	
GW9654-02	4-9-18	
GW9750	4-3-20	
H-87B/U	4-2-6	PAOZZ
	4-3-6	PAOZZ
	4-4-12	PAOZZ
	4-5-12	PAOZZ
MS3367-4-0	4-4-7	PAOZZ
	4-5-7	PAOZZ
MS35333-70	4-4-6	PAOZZ
	4-5-6	PAOZZ
MS35335-34	4-8-3	PAOZZ
MS51957-14B	4-4-5	PAOZZ
	4-5-5	PAOZZ
MS51957-31B	4-9-6	PAOZZ
	4-9-11	PAOZZ
MS51957-32B	4-9-6	PAOZZ
	4-9-11	PAOZZ
MS51958-61B	4-8-1	PAOZZ
M22442/15-1	4-2-12	PAOGZ
	4-3-13	PAOGZ
M22442/19-1	4-2-11	PAOZZ
	4-3-12	PAOZZ
M22442/30-1	4-2-13	PAOZZ
	4-3-14	PAOZZ
M22442/30-2	4-2-14	PAOZZ
	4-3-15	PAOZZ
M22442/37-4708	4-2-8	PAOZZ
	4-3-8	PAOZZ
	4-4-14	PAOZZ
	4-5-14	PAOZZ

Part Number	Figure and Index Number	SM&R Code
M26542/2	4-2-15	
	4-3-16	
M26542/2-01	4-2-15	PAOZZ
	4-3-16	PAOZZ
M26542/2-02	4-2-15	PA--Z
	4-3-16	PA--Z
M26542/2-03	4-2-15	
	4-3-16	
61C846-2L	4-9-2	PAOZZ
61C846-2R	4-9-7	PAOZZ
67B1721-10	4-7-6	PAOZZ
7136032	4-2-7	PAOZZ
	4-3-7	PAOZZ
	4-4-13	PAOZZ
	4-5-13	PAOZZ
765AS284-1	4-2-18	
	4-3-19	
765AS300-1	4-2-16	PAOZZ
	4-3-17	PAOZZ
77A3612-4	4-8-2	PAOZZ
79A4436	4-8-4	PAOZZ
79C4401	4-7-2	PAOZZ
80B4881	4-2-17	PAOZZ
	4-3-18	PAOZZ
81D5189-3	4-3-9	PA--Z
81D5189-4	4-3-9	PAOZZ
83B7361-9	4-3-20	
83C6628-1	4-6-3	XAOZZ
84C6708	4-8-6	XAOZZ
84D6899-1	4-8-5	
84D6899-2	4-8-5	
84D6899-3	4-8-5	
85D7027	4-10-3	PAOOO
85D7087-1P	4-2-2	PAOOO
	4-3-2	PAOOO
	4-4-9	PAOOO
	4-5-9	PAOOO
	4-10	PAOOO
85D7087-2P	4-2-2	PAOOO
	4-3-2	PAOOO
	4-4-9	PAOOO
	4-5-9	PAOOO
	4-10	PAOOO
85D7087-3P	4-2-2	PAOOO
	4-3-2	PAOOO
	4-4-9	PAOOO
	4-5-9	PAOOO
	4-10	PAOOO
85D7088-1	4-10-1	PAOZZ
85D7088-2	4-10-1	PAOZZ
85D7088-3	4-10-1	PAOZZ
85D7139-6	4-3-20	

NUMERICAL INDEX (Cont)

Part Number	Figure and Index Number	SM&R Code
88B7586-2	4-2-9	PAOOO
	4-4-15	PAOOO
	4-9	PAOOO
88C7538-1	4-3-10	PAOZZ
88C7538-2	4-3-10	PAOZZ
88C7538-3	4-3-10	PAOZZ
88C7538-4	4-3-10	PAOZZ
88C7538-5	4-3-10	PAOZZ
88C7538-6	4-3-10	PAOZZ
88C7540-1	4-7-3	XAOZZ
88C7540-2	4-7-4	XAOZZ
88D7518-1	4-10-2	XAOZZ
88D7518-2	4-10-2	XAOZZ
88D7518-3	4-10-2	XAOZZ
88D7554-1	4-7-1	PAOZZ
89B7742	4-2-8	PAOZZ
	4-3-8	
89C7667-1	4-4-3	XAOZZ
	4-5-3	XAOZZ
89C7735-1	4-2-3	PAOOO
	4-3-3	PAOOO
	4-4-8	PAOOO
	4-5-8	PAOOO
	4-7	PAOOO
89C7764-1	4-8-7	PAOZZ
89D7697-1	4-3-20	
	4-4-16	
	4-5-16	
89D7697-2	4-3-20	
	4-4-16	
	4-5-16	
89D7981-1	4-2	PAOOO
89D7981-2	4-2	PAOOO
89D7981-3	4-2	PAOOO
89D7981-7	4-3	PDOOO
89D7981-8	4-3	PDOOO
89D7981-9	4-3	PDOOO
90A8045-1	4-2-1	PAOOO
	4-4-1	PAOOO
	4-6	PAOOO
90A8045-2	4-2-1	PAOOO
	4-4-1	PAOOO
	4-6	PAOOO
90A8045-3	4-2-1	PAOOO
	4-4-1	PAOOO
	4-6	PAOOO
90A8045-7	4-3-1	XAOOO
	4-5-1	XAOOO
90A8045-8	4-3-1	XAOOO
	4-5-1	XAOOO
90A8045-9	4-3-1	XAOOO
	4-5-1	XAOOO
90C7968L	4-6-5	XAOZZ
90C7968M	4-6-5	XAOZZ
90C7968XL	4-6-5	XAOZZ
90C7974-1	4-9-3	XAOZZ
90C7974-2	4-9-8	XAOZZ
90C7985	4-9-12	
90C8006-1	4-6-2	PAOZZ
90C8006-2	4-6-2	PAOZZ
90C8006-3	4-6-2	PAOZZ
90C8015	4-7-5	ZAOZZ
90D7916-4	4-2-4	PAOOO
	4-3-4	PAOOO
	4-4-10	PAOOO
	4-5-10	PAOOO
	4-8	PAOOO
90D7916-5	4-2-4	PAOOO
	4-3-4	PAOOO
	4-4-10	PAOOO
	4-5-10	PAOOO
	4-8	PAOOO
90D7916-6	4-2-4	PAOOO
	4-3-4	PAOOO
	4-4-10	PAOOO
	4-5-10	PAOOO
	4-8	PAOOO
90D7967L	4-6-4	XAOZZ
90D7967M	4-6-4	XAOZZ
90D7967XL	4-6-4	XAOZZ
90D7972-1	4-9-1	PAOZZ
90D7972-2	4-9-1	PAOZZ
90D7972-4	4-9-18	PAOZZ
90D7972-5	4-9-18	PAOZZ
90D7985	4-9-17	PAOZZ
90D7997-1	4-6-1	XAOZZ
90D7998-1	4-6-1	XAOZZ
90D7999-1	4-6-1	XAOZZ
91B8152	4-9-13	XAOZZ
92A8058-2	4-3-20	
	4-4-16	
	4-5-16	
92A8058-5	4-3-20	
	4-4-16	
	4-5-16	
92A8241-1	4-9-14	
92B8414-1	4-4-4	XAOZZ
	4-5-4	XAOZZ
93A8479	4-9-6	
	4-9-11	
93A8514	4-2-5	PAOZZ
	4-3-5	PAOZZ
	4-4-11	PAOZZ
	4-5-11	PAOZZ

NUMERICAL INDEX (Cont)

Part Number	Figure and Index Number	SM&R Code
93B8471	4-8-8	PAOZZ
93C8611-1	4-4-2	XAOZZ
	4-5-2	XAOZZ
93D8532-1	4-9-4	
93D8532-2	4-9-9	
94A8675	4-9-15	
94A8676-1L	4-9-5	
94A8676-1R	4-9-10	
94A8676-2L	4-9-5	
94A8676-2R	4-9-10	
95B9088-1	4-4	AOOOO
95B9088-2	4-4	AOOOO
95B9088-3	4-4	AOOOO
95B9088-7	4-5	AOOOO
95B9088-8	4-5	AOOOO
95B9088-9	4-5	
96B9367	4-9-16	XAOZZ
97A10037-1	4-9-18	
97A10037-2	4-9-18	
97A10037-3	4-9-18	
97A10037-4	4-9-18	

Section 4-7. Maintenance (HGU-33/P thru HGU-52/P and HGU-55/P Helmets Only)

4-105. GENERAL.

4-106. Proper care and use of the fixed wing series helmet assemblies are essential to ensure optimum performance during emergencies and routine operations. The aircrewmember's responsibility for maintenance of the helmet assembly is limited to cleaning (see paragraph 4-114). Repairs or other maintenance actions required shall be performed by organizational level or above upon issue and at least every 90 days thereafter. All maintenance actions shall be documented in accordance with OPNAVINST 4790.2 Series.

NOTE

The inspection interval for fixed wing helmet assemblies assigned to selected air reserve aircrewmembers has been extended to 180 days vice 90 days, providing the helmets are stowed under controlled conditions.

4-107. INSPECTION.

4-108. PREFLIGHT/POSTFLIGHT INSPECTION. The Preflight/Postflight Inspection is a visual inspection performed by the aircrewmember to whom the helmet is issued before/after each flight. To perform the inspection, visually inspect for the general overall condition of the helmet assembly. See paragraph 4-110.

NOTE

Defects or questionable areas noted during this inspection shall be referred to the proper maintenance activity for required corrective action.

4-109. SPECIAL INSPECTION. The Special Inspection shall be performed every 90 days by the organizational level and shall consist of a visual inspection, a functional check, and a thorough cleaning of the helmet assembly.

NOTE

Supply support of the HGU-33/P thru HGU-52/P and HGU-55/P helmets no longer exists. Helmets failing Special Inspection for defective parts must be replaced with the HGU-68/P series helmet.

4-110. Visual Inspection. To visually inspect the helmet assembly, proceed as follows:

1. Inspect chin strap and nape strap for loose or broken stitching and snap fastener retention.

2. Inspect shell for splits, cracks, chips, and delaminations.

3. Inspect MK-634/AIC installation clip for security to helmet.

CAUTION

A laser visor is considered damaged and not to be used if a scratch is detected that exceeds one third the thickness of the lens. A lens can continue to be used if a scratch of lesser depth is detected and is not in the critical vision area or reported as bothersome by the aircrewmember. Damaged lens should be disposed of in accordance with paragraph 4-112.

4. Inspect visor housing for cracks, splits, chips, and delaminations and lenses for scratches and cracks.

5. Check laser visor for scratches or damage.

6. Inspect liner and pads for proper retention. Ensure the liner is not cracked, dented, or excessively loose.

7. Inspect edgeroll for rips, tears, splits, loosening or tearing from the shell.

8. Inspect communications cord for cut, split, or abraded insulation.

9. Inspect earcup for proper retention to shell.

10. Inspect earseals for sound attenuation and pliability.

11. Inspect all hardware for damage and security of attachment. Tighten or replace as necessary.

12. Inspect oxygen mask receivers for proper locking in place and retention to shell.

NOTE

Defects determined from this inspection shall be referred to the proper maintenance activity for required corrective action.

4-111. Functional Check. Functionally check the helmet assembly in accordance with the procedures in NAVAIR 17-15BC-22.

NOTE

The TTU-489/E test set is the only test set available to perform the functional test. If this unit is not available, standard shop procedures should be used.

4-112. DISPOSAL OF LASER VISOR.

4-113. The Laser Eye Protection Visor is a controlled item. The visor must be destroyed, by the organizational level activity having custody, using any of the following methods: incineration, crushing, or shattering.

4-114. CLEANING.

4-115. To clean the various parts of this series of helmet assemblies, proceed as follows:

Materials Required

Quantity	Description	Reference Number
As Required	Detergent, Laundry	Commercial
As Required	Cloth, Lint-Free	—
As Required	Anti-Fogging Compound	NIIN 00-754-2672
As Required	Tissue, Facial	—

1. PRK-37/P Shell.

a. Clean shell and edgeroll using a mild detergent and a lint-free cloth dampened with water. Mild abrasive scouring powder may be used to remove stains or scuff marks.

b. Wipe shell clean using water-dampened cloth to remove detergents.

2. Chin Strap, Nape Strap, and Fitting Pads.

a. Clean by lightly sponging with mild solution of detergent and water.

b. Wipe with a damp, lint-free cloth.

3. Liner.

a. Clean liner by hand washing with mild solution of detergent and water.

b. Thoroughly rinse in clear water and air dry.

4. Skull Cap. Laundering of skull cap is responsibility of aircrewmember.

5. Visor Assemblies.

CAUTION

Ensure that no abrasive particles are lodged in the polish application cloth or paper or in the paper or cloth used to clean or polish the outside of the visor.

Do not use solvent or abrasive type cleaners to clean the laser visor. Do not use polish on laser visors to remove scratches.

a. Clean the clear or neutral lens with mild soap and water using soft paper tissues, soft flannel cloth, soft cotton pads, or a water-dampened chamois and allow to dry.

b. If the clear or neutral lenses are still soiled or slightly scratched, clean outside of visor only with liquid polish canopy cleaner. Clean the inside of visor with soft, lint-free cloth.

WARNING

Alcohol and naphtha are toxic and flammable. Use these agents in a well ventilated area. Do not inhale the vapors or allow prolonged contact with the skin. Keep away from open flame.

c. Use alcohol or naphtha to remove adhesive residue.

(1) To clean the visor, lightly wipe all dust and dirt from the lens using a clean, soft, lint-free cloth.

(2) Clean the laser lens with a moistened cloth or apply moisture directly to lens by breathing on it and then wipe dry with a clean, soft, lint-free cloth or facial tissue.

d. (Optional) Apply anti-fogging compound.

4-116. Document all maintenance actions in accordance with OPNAVINST 4790.2 Series.

CHAPTER 5

PRESSURE-DEMAND OXYGEN MASK ASSEMBLIES

Section 5-1. Description

5-1. GENERAL.

5-2. The oxygen mask assemblies covered in this chapter are pressure-demand type masks used in conjunction with the lightweight helmet assemblies used aboard fixed wing aircraft.

5-3. The oxygen mask assemblies covered in this chapter are designed to be worn over the face, forming a seal to the cheeks over the bridge of the nose and under the chin. The mask is designed for use with a regulator which provides breathing gas (100% oxygen or oxygen diluted with air) upon demand at a pressure schedule dependent on the altitude. The mask can also be used with continuous flow bailout or walkaround oxygen sources. The mask provides facial protection from projectiles and fire as well as being qualified for depths of 16 feet under water. A properly fitted oxygen mask is essential to helmet retention in high-speed ejections. The facepiece permits utilization of the valsalva maneuver to equalize pressure in the middle ear during descent.

5-4. CONFIGURATION.

5-5. The pressure-demand type oxygen mask configurations covered in this chapter are built up by adding and/or removing major components to and/or from the basic MBU-12/P oxygen mask subassembly to obtain the desired configuration. The desired configuration is dependent upon the aircrew or aircraft application. Refer to table 5-1 and table 5-2.

NOTE

The configuration portion of this chapter is divided into two general categories: Major Oxygen Mask Assemblies and Major Oxygen Mask Components, plus a brief description following each subcomponent.

5-6. MAJOR OXYGEN MASK ASSEMBLIES. The following are the major oxygen mask assemblies covered in this chapter as well as a brief description of each. See figures 5-1 through 5-6.

5-7. The MBU-14(V)1/P Oxygen Mask Assembly. The MBU-14(V)1/P oxygen mask assembly is designed for use in aircraft where the mask is required at all times and an audio amplifier is required for communication compatibility. The MBU-14(V)1/P is used with a helmet and chest-mounted miniature regulator. See figure 5-1.

5-8. The MBU-15/P Oxygen Mask Assembly. The MBU-15/P oxygen mask assembly is designed for use in the S-3 aircraft where the mask is used interchangeably with a boom microphone, and an audio amplifier is required for communication compatibility. The MBU-15/P is used with the HGU-49/P and HGU-68(V) helmets incorporating the binaural CX-13128/A and the 40-inch CX-13017/AR communication cables. The 40-inch cable is secured to the regulator-to-seat kit hose. The mask is outfitted with the CRU-79/P series miniature regulator. See figure 5-2.

5-9. The MBU-16/P Oxygen Mask Assembly. The MBU-16/P oxygen mask assembly is designed for use in the AV-8 Series and F/A-18 aircraft where an oxygen mask is required at all times, and an audio amplifier is required for communication compatibility. The MBU-16/P is used with a helmet and is outfitted with the MS27796 connector for use with the OBOGS chest-mounted, diluter-demand regulator. See figure 5-3.

5-10. The MBU-17(V)1/P Oxygen Mask Assembly. The MBU-17(V)1/P oxygen mask assembly is designed for use in aircraft where the mask is used interchangeably with the boom microphone, and an audio amplifier is required for communication compatibility. The mask is fitted with the MC-3A connector for use with a panel-mounted regulator, walkaround unit, or bailout bottle. See figure 5-4.

5-11. The MBU-17(V)2/P Oxygen Mask Assembly. The MBU-17(V)2/P oxygen mask assembly is designed for use in aircraft where the mask is used interchangeably with a boom microphone, and an audio amplifier is not required for communication compatibility. The mask is fitted with the MC-3A connector for use with a panel-mounted regulator, walkaround unit, or bailout bottle. See figure 5-5.

5-12. The MBU-17(V)5/P Oxygen Mask Assembly. The MBU-17(V)5/P oxygen mask assembly is designed for use in the E-2C aircraft which is equipped with the crew backpack escape system. The mask is fitted with the CRK-90 connector for use with a panel-mounted regulator or the emergency escape oxygen system. See figure 5-6.

5-12A. The MBU-17(V)6/P Oxygen Mask Assembly. The MBU-17(V)6/P oxygen mask assembly is designed for use in the F-5 aircraft. The mask is fitted with the M22442/33-4707 communications cable for compatibility with the F-5 communications system.

5-12B. The MBU-17(V)8/P Oxygen Mask Assembly. The MBU-17(V)8/P oxygen mask assembly is designed for use in the MV-22 aircraft. The mask is fitted with the N100493-00, 10-Volt microphone and amplifier for compatibility with the MV-22 communications system.

5-13. MAJOR OXYGEN MASK COMPONENTS. The following paragraphs contain the major components of the oxygen mask and a brief description of each. It is required that these components be added to the basic MBU-12/P oxygen mask to obtain the desired oxygen mask configuration. Refer to table 5-1 for component application.

5-14. MBU-12/P Oxygen Mask Subassembly. The MBU-12/P is a lightweight, low profile, pressure-demand type oxygen mask. The mask features an integral facepiece/hardshell. The facepiece is pliable silicone and the hardshell is polysulphonate. The mask also features a combination inhalation/exhalation valve and a flexible soft silicone hose. The mask is fitted with an antistretch cord which is secured at the upper end to the valve. When the oxygen mask assembly is built up, the lower end of the antistretch cord will be secured to either the miniature regulator, the MS27796 connector, or the MC-3A connector. The hardshell is outfitted with a microphone receptacle assembly on the outside and a microphone bracket on the inside for positioning of the noise cancelling microphone.

5-15. Offset Bayonets and Bayonet Receivers. The bayonet receivers come with the helmet assembly and are installed at the time the oxygen mask is fitted. The offset bayonets are used to attach the oxygen mask to the helmet through the use of the bayonet receivers and must be requisitioned separately.

5-16. Connectors and Regulators. The connectors are used for the purpose of attachment to regulators and walkaround units. The regulators are used to control the flow of oxygen into the oxygen mask.

5-17. Communication Cable Assemblies. Each of the oxygen mask assemblies is outfitted with the appropriate communication components for operation with an aircraft ICS (Intercommunication System).

5-18. M-101/AIC Microphone and AM-7067/A Amplifier. The M-101/AIC microphone is a noise cancelling dynamic microphone. The AM-7067/A amplifier is a microphone preamplifier designed to be installed in place of the oxygen mask receptacle assembly on specific aircraft.

5-19. SUPPLEMENTARY EQUIPMENT.

5-20. OXYGEN MASK STORAGE BAG. For those oxygen masks worn with the PCU series torso harness, the optional use of an oxygen mask storage bag, fabricated and installed in accordance with paragraph 5-84, is authorized.

5-21. FUNCTION.

5-22. When properly fitted, the MBU-12/P oxygen mask will retain a pressure in excess of ambient pressure up to the maximum pressure supplied by the regulator.

5-23. The MBU-12/P oxygen mask subassembly features a combination inhalation/exhalation valve. The valve offers the advantage of miniature size, but does exhibit slightly higher exhalation resistance. The valve is sensitive to both dust and contamination.

5-24. Operation of the valve is very simple. The valve is installed in the mask hardshell such that one side of the valve 'sees' mask pressure and the other side 'sees' hose pressure. See figure 5-7. Upon inhalation, the pressure within the mask becomes less than the pressure within the oxygen hose; the flapper of the valve opens and oxygen from the hose enters the oxygen mask. See figure 5-8. Upon exhalation, the pressure within the mask becomes greater than the pressure within the hose; the flapper closes and the spring/diaphragm collapses, and the exhalation is exhausted. See figure 5-9.

5-25. GROUND SUPPORT EQUIPMENT.

5-26. OXYGEN HOSE AND COMMUNICATIONS TEST SET TTU-489/E. The TTU-489/E Test Set is presently the only one available to perform the functional test. Refer to NAVAIR 17-15BC-22. If this test set is not available, standard shop procedures should be used to perform required tests.

Table 5-1. Oxygen Mask Configuration Matrix

Mask Designator	Mask	Connector			Mike and Amp				Cables					Regulators (Note 4)			Regulator to Seat Kit Hose Assy			Misc.
	MBU-12/P	MS27796 (Note 1)	MC-3A (Note 2)	CRK-90 (Note 5)	Receptacle Assembly (Note 3)	M-101/AIC	AM-7067/A	P/N N100493-00, 10 Volt	CX-13126A/A	CX-13127/A	CX-13154/A	CX-4434U/16 In.	M22442/33-4707	Miniature Regulators (LOX Aircraft Only) CRU-79/P Series	Panel Mounted or Walkaround	Torso Mounted	33C1138-2	33C1178-1	12080-2	Offset Bayonets
MBU-14(V)1/P	X	–	–	–	–	X	X	–	X	–	–	–	–	X	–	–	X	X	X	X
MBU-15/P (Note 6)	X	X	–	–	–	X	X	–	–	X	–	–	–	X	–	–	–	X	–	X
MBU-16/P	X	X	–	–	–	X	X	–	X	–	–	–	–	–	–	X	–	X	–	X
MBU-17(V)1/P	X	–	X	–	–	X	X	–	–	–	X	–	–	–	X	–	–	–	–	X
MBU-17(V)2/P	X	–	X	–	X	X	–	–	–	–	X	X	–	–	X	–	–	–	–	X
MBU-17(V)5/P	X	–	–	X	–	X	X	–	–	–	X	–	–	–	X	–	–	–	–	X
MBU-17(V)6/P	X	X	–	–	X	X	–	–	–	–	–	–	X	–	–	X	–	–	–	X
MBU-17(V)8/P	X	–	–	–	–	–	–	X	–	–	–	X	–	–	–	–	–	–	–	X

Legend: X = Required
– = Not Applicable

Notes:

1. MS27796 connector is supplied with the MBU-12/P oxygen mask subassembly or can be procured separately.
2. MC-3A connector used with panel mounted regulator and walkaround unit.
3. Receptacle assembly is supplied with MBU-12/P oxygen mask subassembly.
4. Regulators are not a part of the oxygen mask configuration. Shown here for information only. (Refer to NAVAIR 13-1-6.4-2)
5. CRK-90 oxygen connector is only used in E-2C aircraft equipped with backpack emergency equipment.
6. S-3 aircraft authorized to use CRU-79/P regulator.

Table 5-2. Oxygen Mask Application Matrix

Mask Designator	Fighter/ Reconnaissance				Attack		ASW	Electronics		Tanker	Cargo Transport	Trainers								Tilt Rotor
	All Fighters	F/A-18	All Reconnaissance	F-5 Series	AV-8B	All Other Attack	S-3 Series	E-2C	EA-6 Series	KC-130	C-2A Pilot & Copilot	T-2C	TA-4 Series	TA-7C	TAV-8B	TE-2C	T-34 Series	T-38 Series	T-45 Series	MV-22
MBU-14(V)1/P	X	X	X	–	–	X	–	–	X	–	–	X	X	X	–	–	–	–	–	–
MBU-15/P	–	–	–	–	–	–	X	–	–	–	–	–	–	–	–	–	–	–	–	–
MBU-16/P	–	O	–	–	X	–	–	–	–	–	–	–	–	–	X	–	–	–	X	–
MBU-17(V)1/P	–	–	–	–	–	–	–	X	–	X	–	–	–	–	–	X	–	–	–	–
MBU-17(V)2/P	–	–	–	–	–	–	–	–	–	O	X	–	–	–	–	–	X	–	–	–
MBU-17(V)5/P (Note 1)	–	–	–	–	–	–	–	X	–	–	–	–	–	–	–	–	–	–	–	–
MBU-17(V)6/P	–	–	–	X	–	–	–	–	–	–	–	–	–	–	–	–	–	X	–	–
MBU-17(V)8/P	–	–	–	–	–	–	–	–	–	–	–	–	–	–	–	–	–	–	–	X

Legend: X = Required – = Not Applicable
O = Alternate

Notes: 1. The MBU-17(V)5/P mask is required only for all E-2C aircraft equipped with backpack escape system.

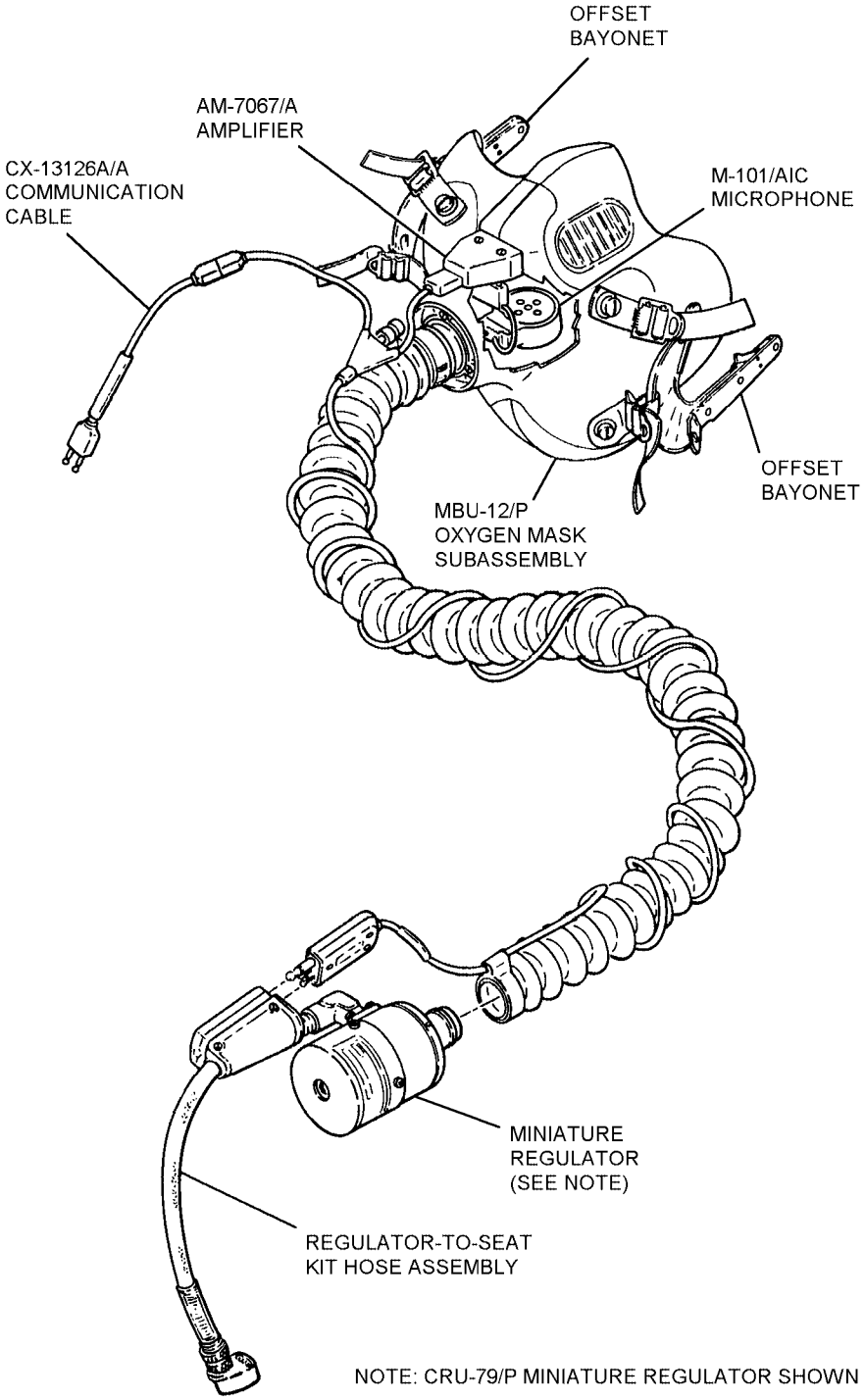

5-1

Figure 5-1. MBU-14(V)1/P Oxygen Mask Assembly

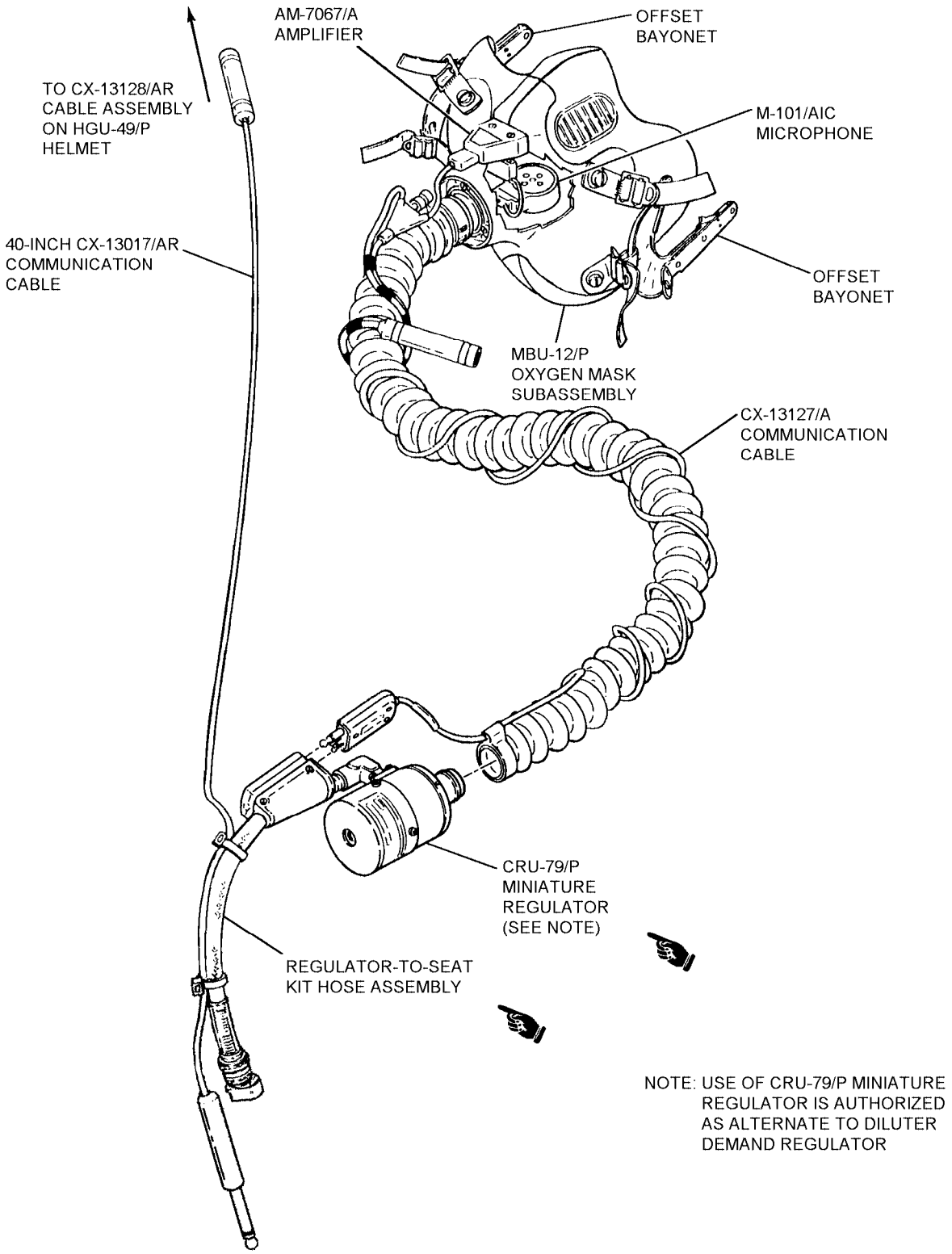

5-2

Figure 5-2. MBU-15/P Oxygen Mask Assembly (S-3 Aircraft)

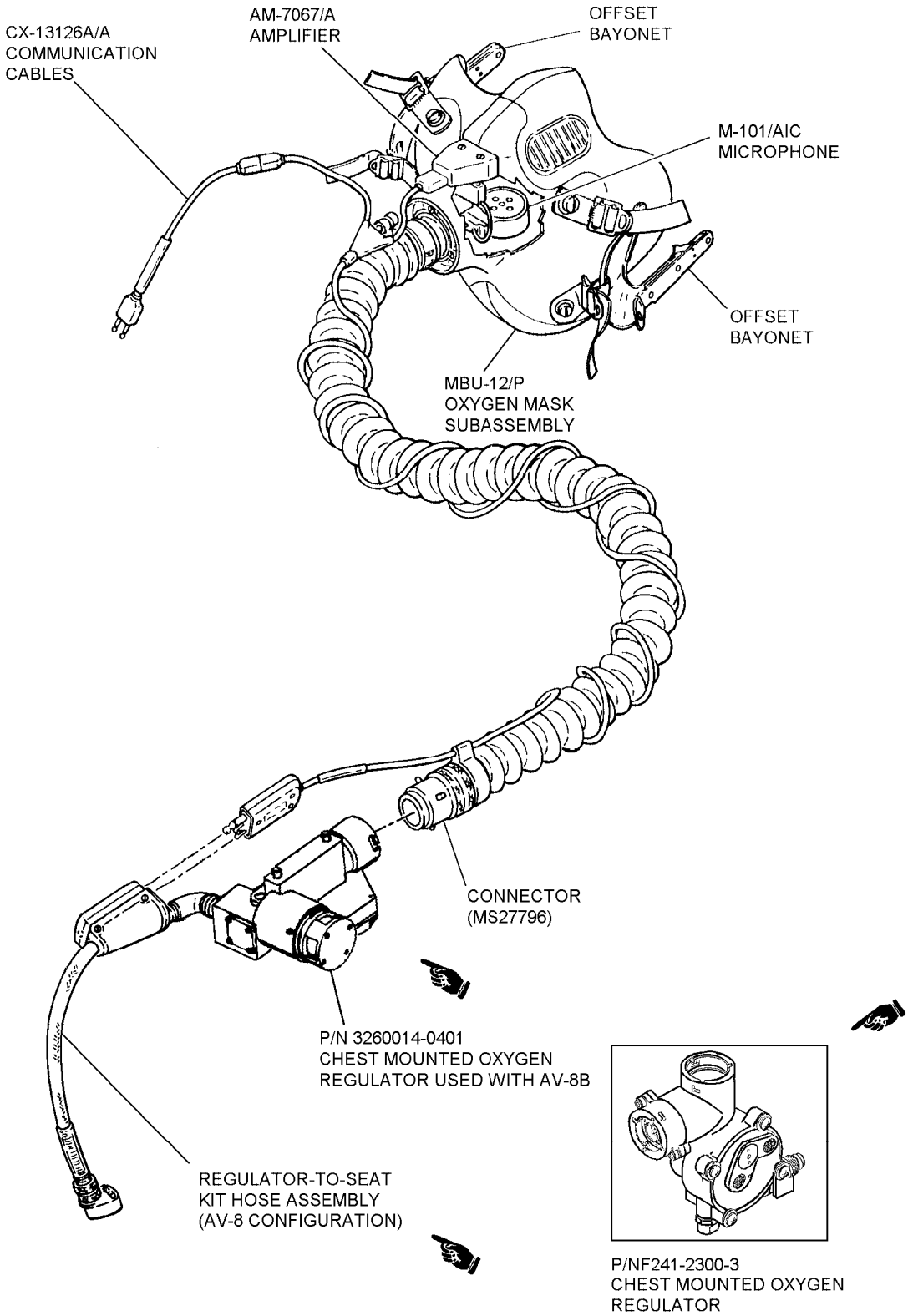

5-3

Figure 5-3. MBU-16/P Oxygen Mask Assembly (AV-8 Series and F/A-18 Aircraft)

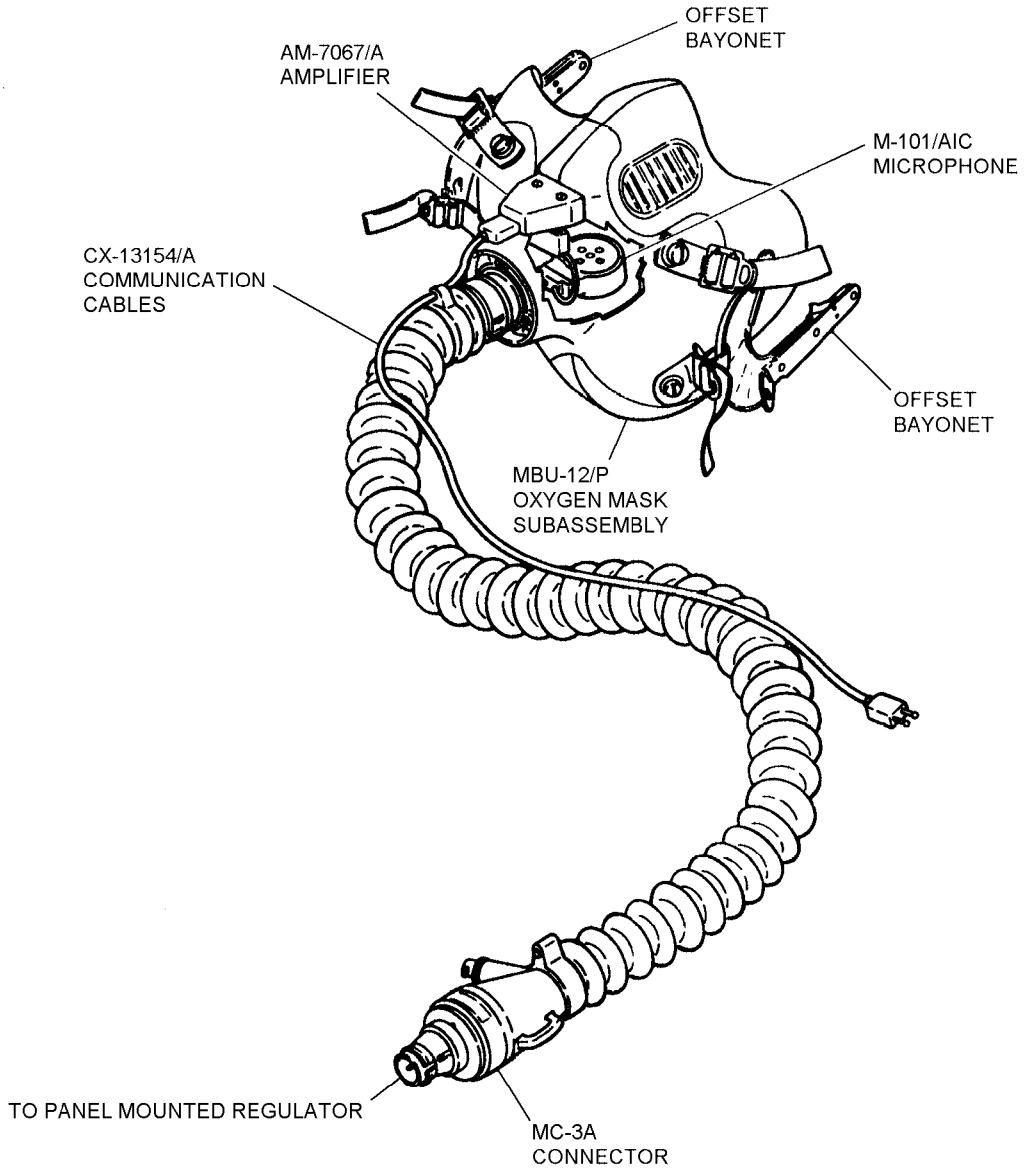

5-4

Figure 5-4. MBU-17(V)1/P Oxygen Mask Assembly

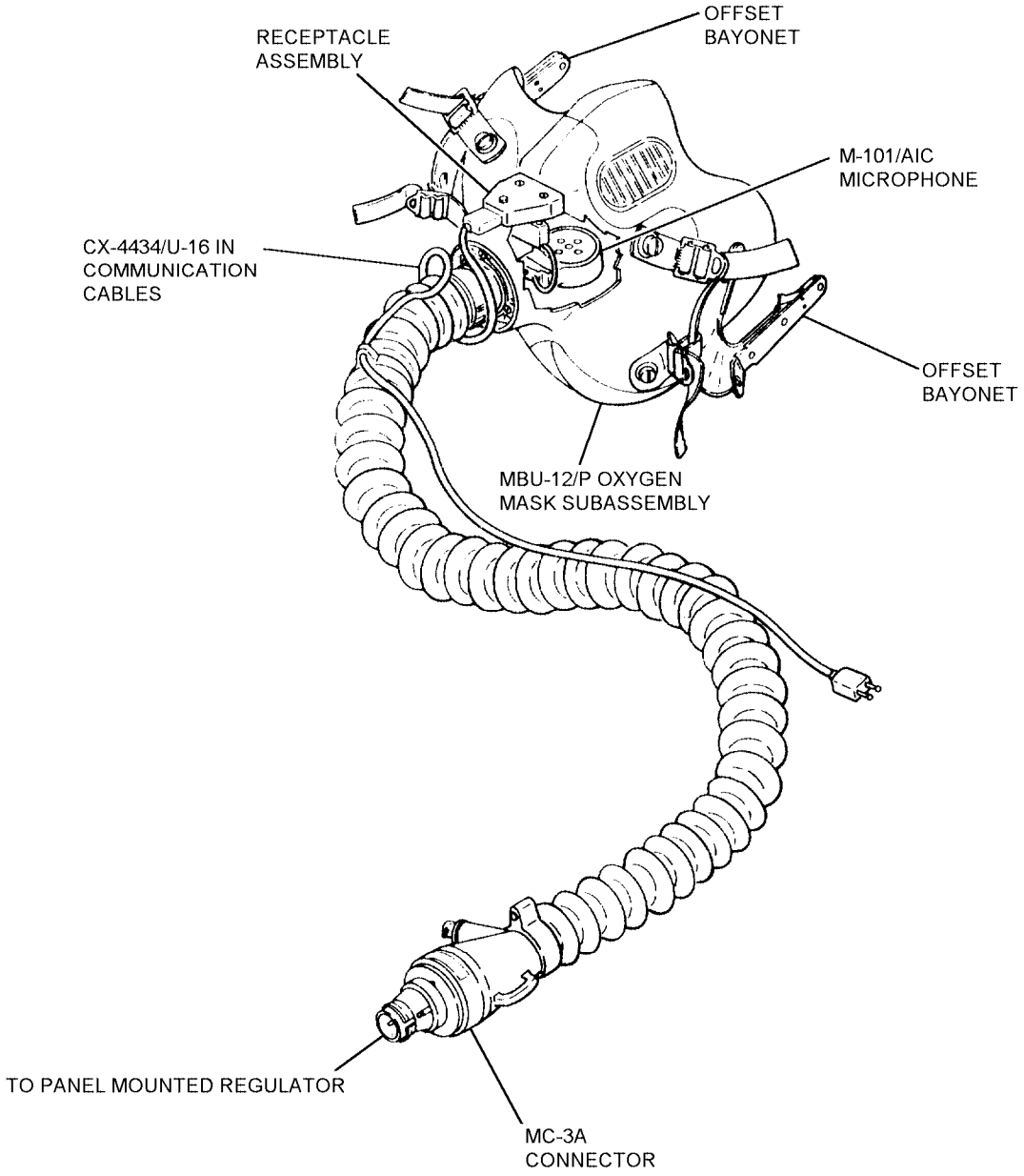

5-5

Figure 5-5. MBU-17(V)2/P Oxygen Mask Assembly

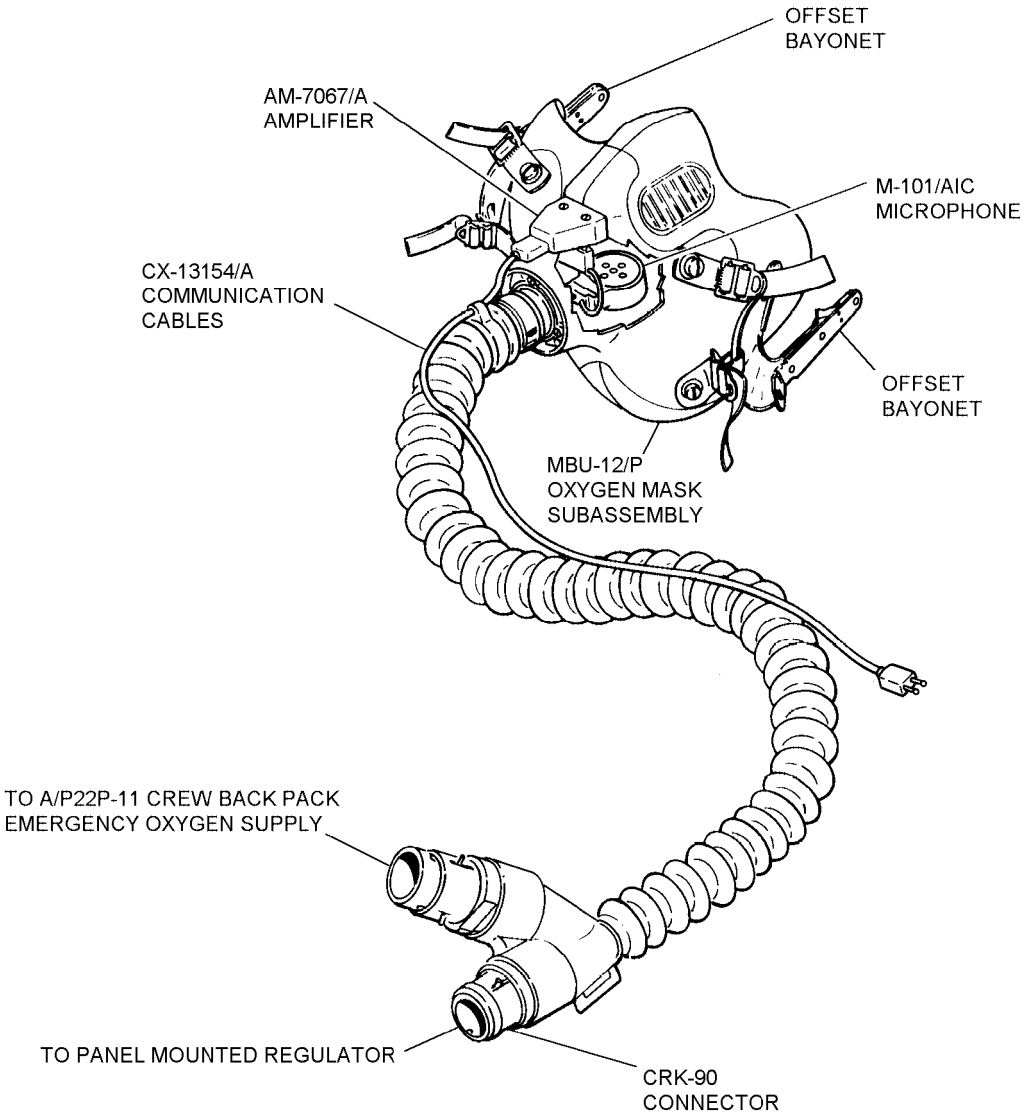

5-6

Figure 5-6. MBU-17(V)5/P Oxygen Mask Assembly (E-2C Aircraft)

5-27. SPECIAL TOOLS. Special tools are available for sizing oxygen masks and installing components on oxygen mask assemblies. See table 5-3.

5-28. APPLICATION.

5-29. The oxygen mask assemblies covered in this chapter are designed for use by aircrewmembers aboard the aircraft listed in table 5-2.

5-30. REFERENCE NUMBERS, ITEMS, AND SUPPLY DATA.

5-31. Section 5-6. Illustrated Parts Breakdown, will contain information on each assembly, subassembly, and component part of this series of oxygen mask assemblies. It will also contain figure and index numbers, reference or part numbers, description, units per assembly and usable on codes are provided with the breakdown.

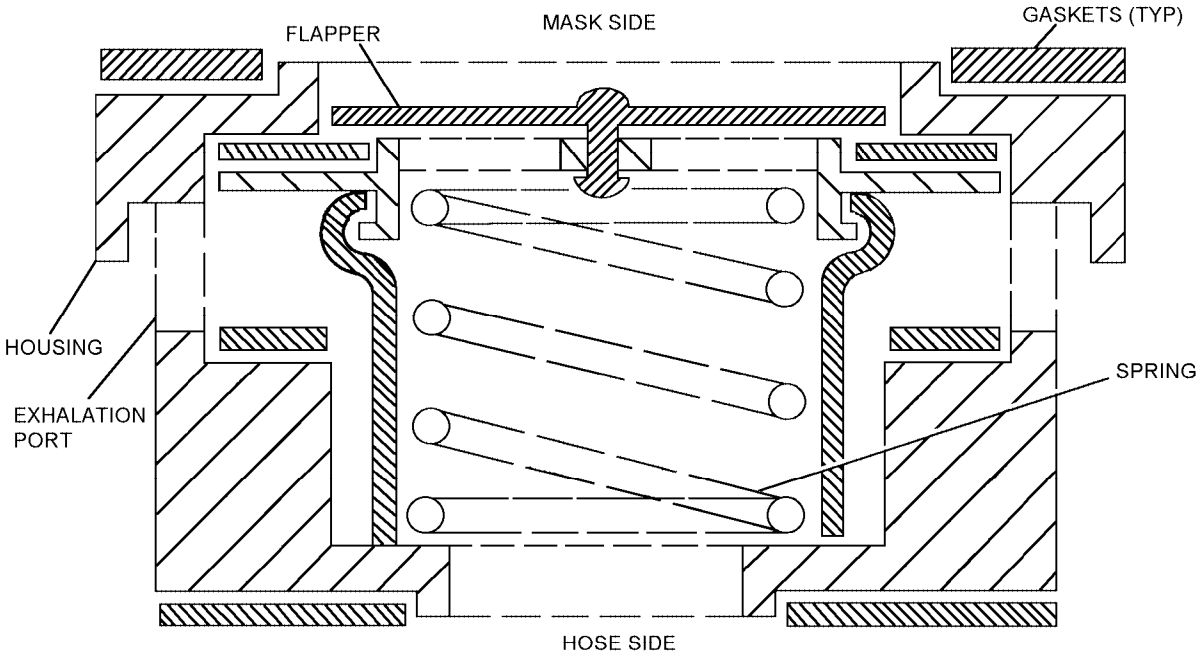

5-7

Figure 5-7. Cross Sectional View of a Combination Inhalation/Exhalation Valve

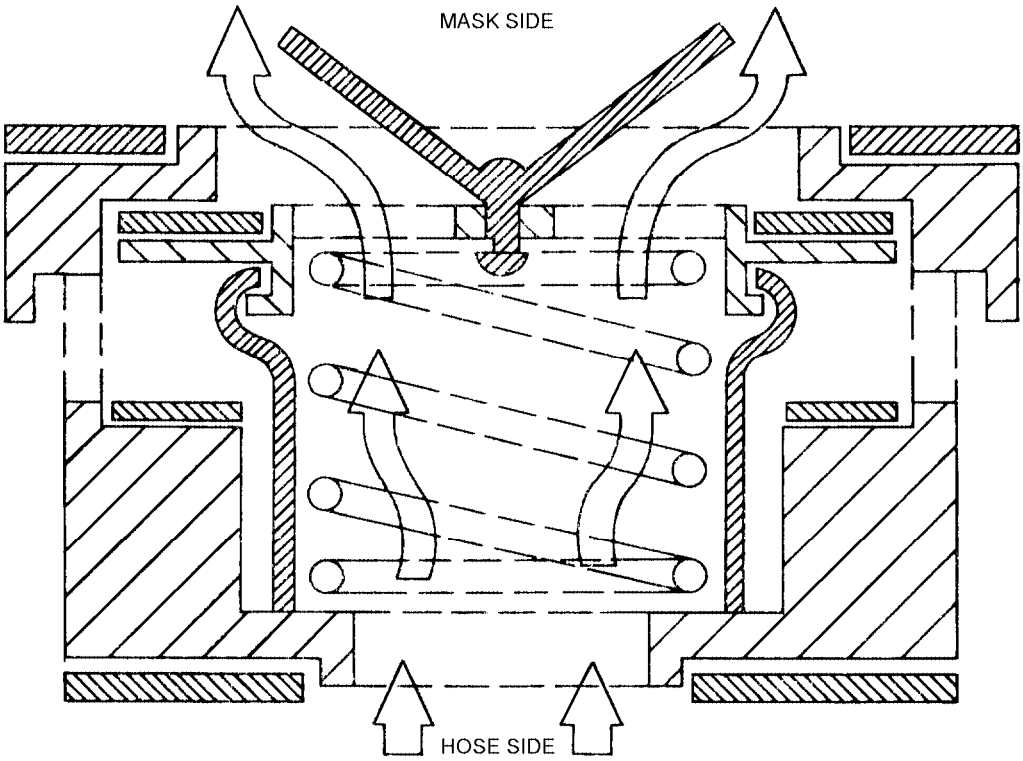

5-8

Figure 5-8. Cross Sectional View of Valve During Inhalation

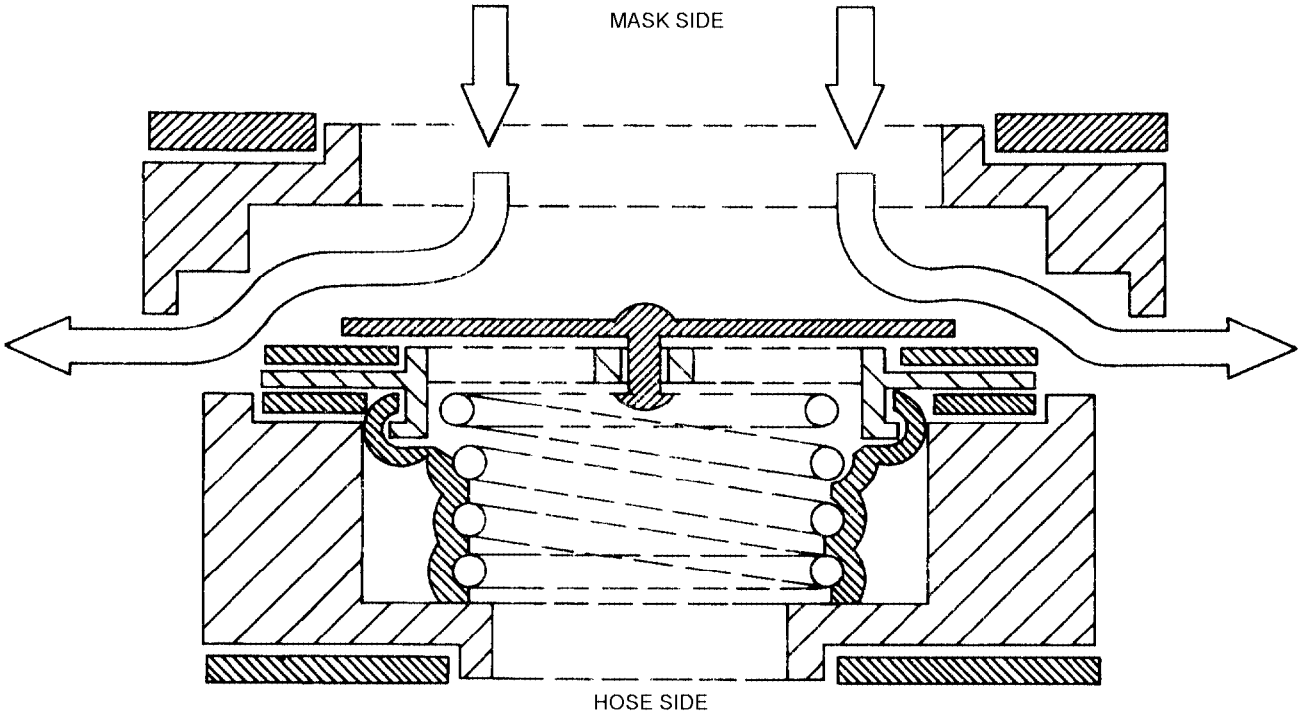

5-9

Figure 5-9. Cross Sectional View of Valve During Exhalation

Table 5-3. Special Tools

Tool Number	Nomenclature	Use and Application
P/N 00-6297 (CAGE 53655)	Elastrator	Insertion of cables through cable guides and removal of cable guide from delivery tube
P/N 211-838-1 (CAGE 53655)	Valve Wrench (Note 1)	Valve nut removal and installation
P/N 834-800 (CAGE 53655)	Mask Sizing Caliper (Note 1)	Facial contour measurement
P/N 450-813 (CAGE 53655)	Upper and Lower Hose Clamp Pliers (Note 1)	Removal of upper and lower hose clamps
P/N MS90387-1 (CAGE 28210)	Installation Tool	Installation of upper and lower hose tiedown straps

Notes: 1. Tools provided in parts kit P/N 450-50 (CAGE 15927 or 53655).
2. All tools used with oxygen equipment shall be clean and free of grease.

Section 5-2. Sizing

5-32. GENERAL.

5-33. The concept of sizing as used in this chapter refers to the basic methods to be followed by the Aircrew Survival Equipmentman for requisitioning the proper size oxygen mask assembly from supply. Once the basic oxygen mask size has been determined and requisitioned, the MBU-12/P oxygen mask is ready for buildup to the ultimate configuration desired (Section 5-3).

5-34. SIZING.

5-35. SIZING THE BASIC MBU-12/P OXYGEN MASK ASSEMBLY. To select the proper size oxygen mask for the aircrewmember, proceed as follows:

NOTE

There are four mask sizes from which to choose the proper fit.

Materials Required

Quantity	Description	Reference Number
1	Mask Sizing Caliper	P/N 834-800 (CAGE 53655)

1. Ensure that the individual's facial muscles are relaxed and that the jaws are lightly closed.

NOTE

The mask sizing caliper is only a beginning tool, and trial and error fitting of more than one size mask may be necessary. If the proper size mask cannot be determined, contact the local Aviation Physiologist for assistance.

2. Measure the distance from the bridge of the nose (maximum depression of the nasal root) to just underneath the chin bone.

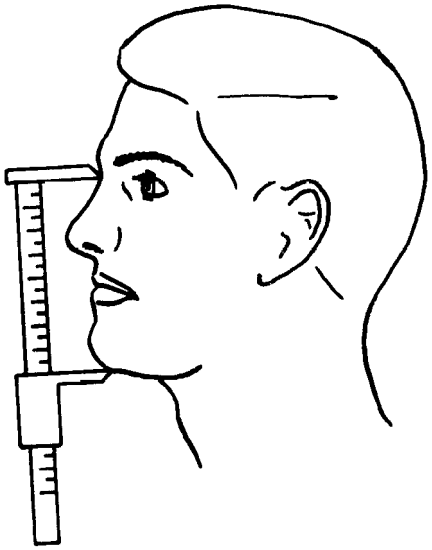

NOTE: HOLD CALIPER AS SHOWN ABOVE TO READ MBU-12/P MASK SIZE. OPPOSITE SIDE INDICATES MBU-5/P SIZES AND IS NOT TO BE USED.

5p35s2

Step 2 - Para 5-35

NOTE

Aircrewmembers who will be wearing personal prescription glasses, aviator sunglasses, or laser spectacles during flight should be wearing these items while checking for proper mask size. These items should also be worn while fitting helmet liners.

3. Using the mask size indicated by the calipers, place the mask on the individual's face. Mask should normally be positioned at least a finger width below the nose bridge indentation in order to provide optimum downward vision. Ensure mask feels comfortable to the individual. If vision is impaired, try the next smaller mask size. If mask is uncomfortable, try the next larger size mask.

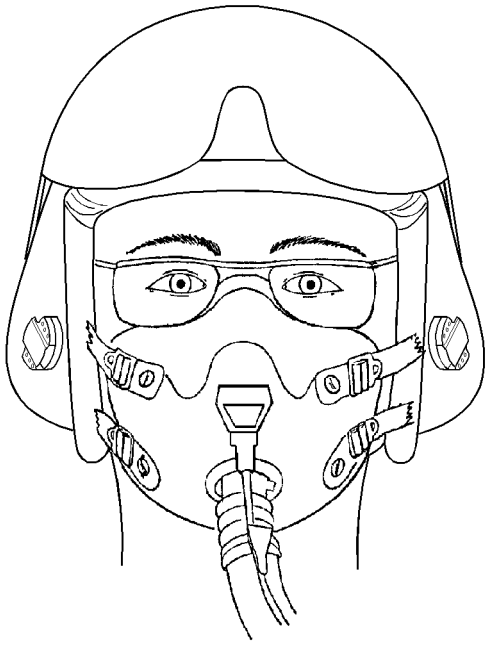

5p35s3

Step 3 - Para 5-35

4. Have the aircrewman hold the mask to his/her face in the correct position. Seal off the hose, by manually twisting, and have the individual exhale sharply into the mask. Blow-by into the eyes is unacceptable since dry oxygen may cause eye irritation. If blow-by is encountered, try the next smaller size mask and repeat steps 3 and 4.

5. Again seal the hose off and have the individual inhale and exhale. Ensure the mask seals around the entire periphery. If leaks are evident, try the next smaller size and repeat steps 3 through 5.

6. Again seal off the hose and have the individual inhale strongly, mask should stay in position on the individual's face without holding it. If it does not try the next smaller size mask and repeat steps 3 through 6.

5-36. INSTALLATION OF THE PAD ADAPTER (OPTIONAL). The pad adapter is designed to allow custom fitting of the nose bridge area of the mask to provide additional comfort and to prevent leaks or "Blow-By" in the nose-to-nose area of the mask. To install, proceed as follows:

Materials Required

Quantity	Description	Reference Number
1	Pad Adapter	P/N G012-1094 (CAGE 60240) NIIN 01-232-5141
As Required	Adhesive, RTV	MIL-A-46146A Type 1 NIIN 00-118-2695
2	Clothes Pin, Spring Type	Commercial

1. Locate the yellow dot on the one side of the pad adapter.

2. Bend the pad adapter by hand to approximately the shape of the inside curvature of the nose area of the mask, making certain the yellow dot is on the concave (inside) side of the resulting curved shape.

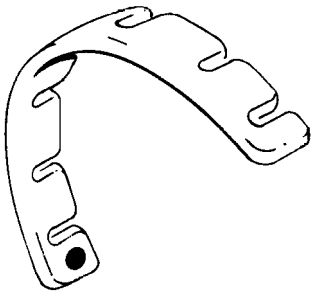

5p36s2

Step 2 - Para 5-36

3. Insert the pad adapter into the nose area of the mask between the faceseal flange and the outside layer of the silicone. Check to ensure the slits in the pad are properly aligned to the corresponding ribs in the nose section of the mask.

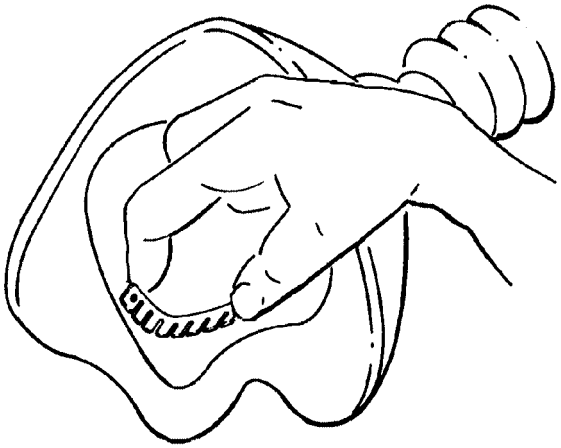

Step 3 - Para 5-36

5p36s3

4. Insert a small amount, or dot, of RTV silicone between the pad and the inside of the mask and use a flat toothpick to spread RTV evenly on flat surface of pad. Secure in place with spring type clothes pins until the silicone cures (approximately 24 hours).

5. To prevent damage to the internal ribs of the mask when removing the pad for cleaning, carefully peel the silicone away from the mask and pad. Replace pad as needed.

6. Have the individual being fitted, don the mask. Using the thumb and forefinger, custom shape the nose area of the mask to the wearer's nose until an airtight, but comfortable, fit is obtained.

7. Again seal off the nose area and have the individual exhale strongly. If necessary, pinch shape the area, as in step 6 until blow-by is eliminated.

Section 5-3. Oxygen Mask Configuration Buildup

5-37. GENERAL.

5-38. Once the basic MBU-12/P oxygen mask and components are received, carefully inspect the shipping containers for evidence of damage or signs of abuse. Open each container and verify that all the required items have ben included. If any parts are defective, damaged, or missing, replace all parts in the shipping container, prepare a Quality Deficiency Report (QDR), and notify the proper authority (CFA). Obtain as much information from the deficient mask as possible; information such as Contract Number, manufacturers name (CAGE), part number, size, and year and quarter of manufacture. Most equipment carries a warranty period, CFA's can provide this information. The year and quarter of manufacture can be found on every mask on the left side cheek flap as shown below. Example indicates item manufactured in 3rd quarter 1990.

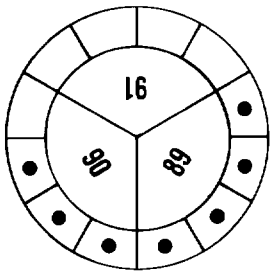

NUMBER INDICATES YEAR OF MANUFACTURE. TOTAL NUMBER OF DOTS IN ANY YEAR SEGMENT INDICATES QUARTER OF YEAR FOR EACH DOT.

5p38

5-39. Once the oxygen mask and related components have been accepted the mask may be built up by adding or removing major components to obtain the desired configuration for required aircrew or aircraft applications. This section, used in accordance with tables 5-1 and 5-3, should provide enough information for one to accomplish this task.

5-40. ASSEMBLY OF COMPONENTS.

5-41. ORDER OF ASSEMBLY. To assemble the various oxygen mask configurations, install the appropriate component parts onto the MBU-12/P oxygen mask assembly in accordance with and in the order shown in tables 5-4 through 5-9.

5-42. INSTALLATION OF BAYONET RECEIVER ASSEMBLY. To install the bayonet receiver assembly, proceed as follows:

Materials Required

Quantity	Description	Reference Number
1	Bayonet Receiver Assembly	93A8514 (CAGE 97427)
1	Bayonet, LH	70280-10 NIIN 00-186-0276
1	Bayonet, RH	70280-20 NIIN 00-186-0277
As Required	Adhesive, Polychloroprene, Class 3	MIL-A-5540 NIIN 00-515-2246
As Required	Adhesive, RTV 102/732	MIL-A-46106 NIIN 00-877-9872
As Required	Thread, Nylon, Type E	V-T-295 NIIN 00-244-0609

CAUTION

Ensure that TPL assembly and chin/nape strap assembly are properly fitted and adjusted to aircrewmember's head prior to drilling holes in helmet shell assembly. Location/alignment of the bayonet receiver assembly is critical, since the bayonet receivers are not adjustable.

1. Have aircrewmember don properly fitted helmet assembly.

NOTE

Aircrewmembers who will be wearing personal prescription glasses, aviator's sunglasses, or laser spectacles during flight, should be wearing those items while fitting the mask.

2. With helmet properly fitted and oriented on head, have aircrewmember hold oxygen mask in proper position on face. Lower visor until contours of mask and visor are fully mated. Lock visor in place.

3. Insert each bayonet of oxygen mask harness assembly into a bayonet receiver to the second locking position. The projections on bayonet receiver should be positioned toward the tip end of the oxygen mask bayonet.

4. While aircrewmember holds properly adjusted oxygen mask to face, ensure that the straps of the oxygen mask have equal tension.

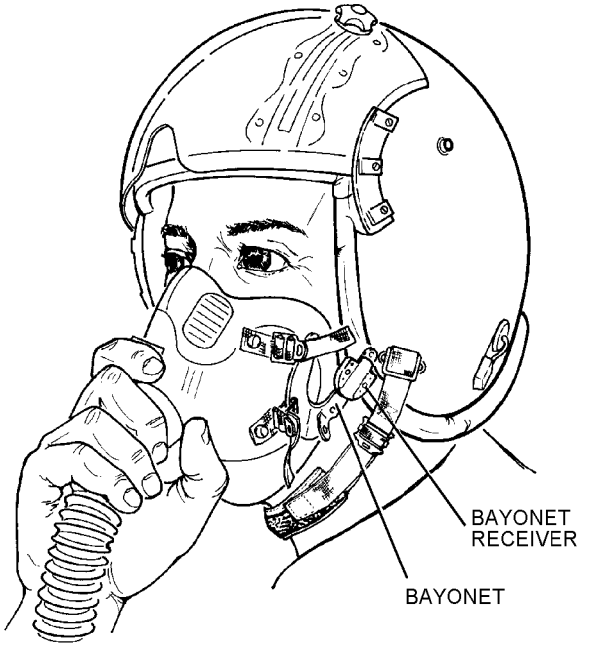

Step 4 - Para 5-42

NOTE

Ensure that placement of bayonet receivers is no closer than 1/2 inch from edge of helmet shell assembly.

5. While holding bayonet receiver assemblies firmly against the helmet shell assembly, ensure offset bayonet is flush with and parallel to helmet shell assembly edge-roll. Then, trace outline of each bayonet receiver with a lead pencil onto the helmet shell assembly. Do not use marker or grease pencil.

5A. Using a razor knife, cut out and remove any portion of the leather visor retention buffer pad inside area selected for jaw receiver installation.

6. While holding only the bayonet receiver spacers against the helmet shell assembly at marked positions, use a lead pencil to mark the location of the upper receiver screw hole onto the right and left hand sides of the helmet shell assembly.

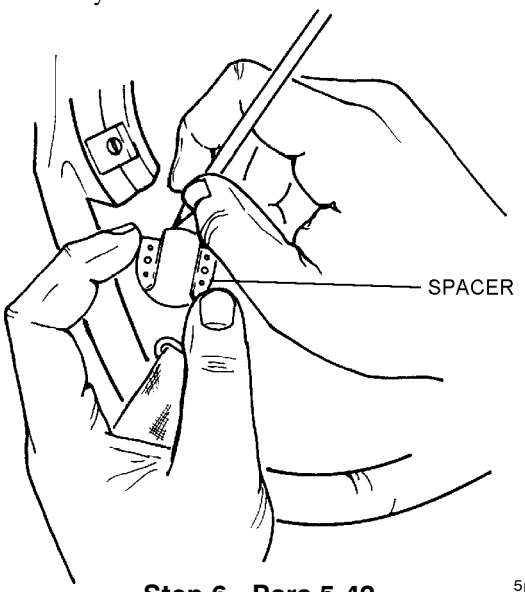

Step 6 - Para 5-42 5p42s6

NOTE

When drilling holes in helmet shell assembly, ensure that drill is held perpendicular to helmet shell assembly.

7. Remove mask and helmet from wearer and remove earcup assemblies. Hold pile fastener fabric inside helmet shell assembly away from area to be drilled. At the marked hole locations, drill each screw hole using a number 25 drill.

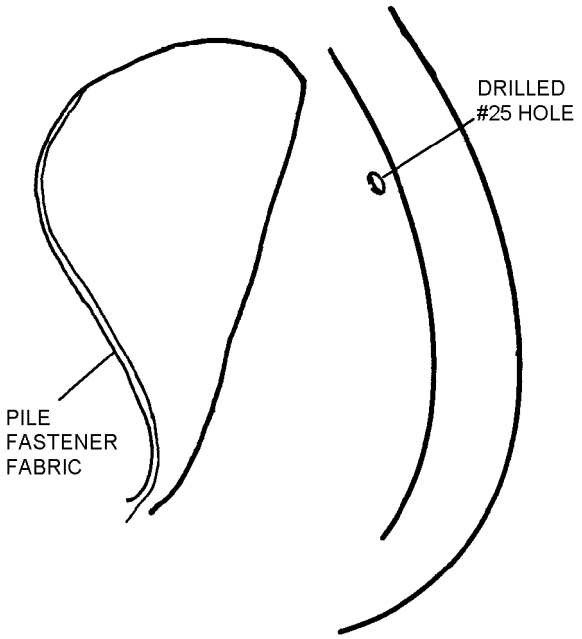

Step 7 - Para 5-42 5p42s7

8. Attach only right and left hand receivers to helmet shell assembly using the upper screw, lock washer, and backup plate. Do not tighten screw more than four turns, allowing the assembly to rotate to its optimum location for the user, during mask fitting.

9. Reinstall earcup assemblies and have aircrewmember don helmet assembly and oxygen mask assembly, again inserting each bayonet into the second locking position of receiver.

NOTE

When experiencing difficulty inserting the bayonet into the bayonet receiver due to helmet shell edgeroll interference, fabricate and install bayonet receiver shims in accordance with paragraph 5-43 steps 1 through 4.

10. Readjust the straps on the mask tightening upper left and lower right straps together, then upper right and lower left straps together, keeping mask centered on face and equalizing tension on straps. While tightening straps, allow bayonet receivers to rotate freely to their optimum location for the individual. Lower visor and tighten visor knob. Visor cutout should mate with mask profile. Ensure comfortable, air tight fit of the mask is achieved by having crewman breathe while manually twisting the oxygen hose to cut off air supply through hose. If leaks occur between mask and face, check the following.

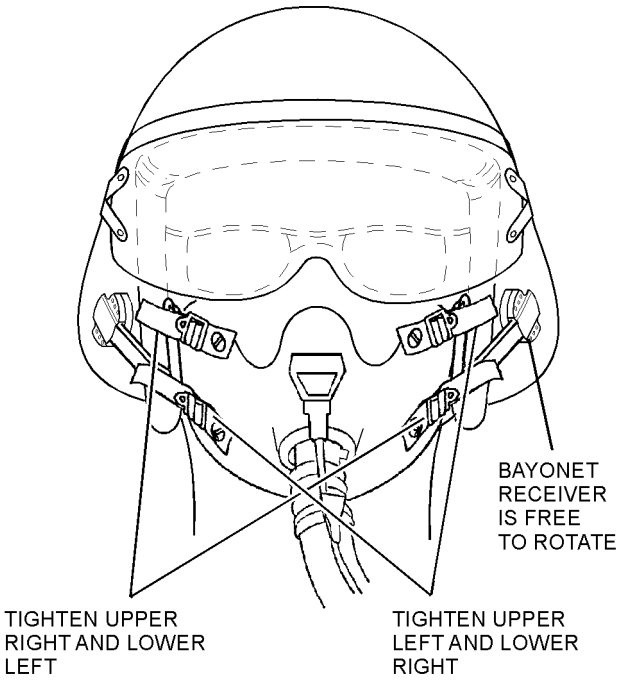

Step 10 - Para 5-42 5p42s10

Table 5-4. MBU-14(V)1/P Assembly of Components

Order of Assembly	Component/Assembly to be Installed	Paragraph Reference
1	Offset Bayonets and Bayonet Receivers	5-42
2	M-101/AIC Microphone Assembly and AM-7067/A Amplifier Assembly	5-45
3	CX-13126A/A Cable Assembly	5-47
4	Miniature Regulator and Regulator-to-Seat Kit Hose Assembly	5-49

Table 5-5. MBU-15/P Assembly of Components

Order of Assembly	Component/Assembly to be Installed	Paragraph Reference
1	Offset Bayonets and Bayonet Receivers	5-42
2	M-101/AIC Microphone Assembly and AM-7067/A Amplifier Assembly	5-45
3	CX-13127/A Cable Assembly	5-47
4	MS27796 Connector	5-50
5	Positive Pressure and Miniature Regulators and Regulator-to-Seat Kit Hose Assembly	5-50
6	CX-13017/AR 40-Inch Cable Assembly	5-51

Table 5-6. MBU-16/P Assembly of Components

Order of Assembly	Component/Assembly to be Installed	Paragraph Reference
1	Offset Bayonets and Bayonet Receivers	5-42
2	M-101/AIC Microphone Assembly and AM-7067/A Amplifier Assembly	5-45
3	CX-13126A/A Cable Assembly	5-47
4	MS27796 Connector	5-50
5	Positive Pressure Chest-Mounted Regulator, and Miniature Regulators and Regulator-to-Seat Kit Hose Assembly	5-50

Table 5-7. MBU-17(V)1/P Assembly of Components

Order of Assembly	Component/Assembly to be Installed	Paragraph Reference
1	Offset Bayonets and Bayonet Receivers	5-42
2	M-101/AIC Microphone Assembly and AM-7067/A Amplifier Assembly	5-45
3	CX-13154/A Cable Assembly	5-46
4	MC-3A Connector for Panel-Mounted Regulators and Walkaround Units	5-48

Table 5-8. MBU-17(V)2/P Assembly of Components

Order of Assembly	Component/Assembly to be Installed	Paragraph Reference
1	Offset Bayonets and Bayonet Receivers	5-42
2	M-101/AIC Microphone Assembly	5-44
3	CX-4434/U-16 In. Cable Assembly	5-46
4	MC-3A Connector for Panel-Mounted Regulators and Walkaround Units	5-48

Table 5-9. MBU-17(V)5/P Assembly of Components

Order of Assembly	Component/Assembly to be Installed	Paragraph Reference
1	Offset Bayonets and Bayonet Receivers	5-42
2	M-101/AIC Microphone Assembly and AM-7067/A Amplifier Assembly	5-45
3	CX-13154/A Cable Assembly	5-46
4	CRK-90 Connector for Panel-Mounted Regulator and Walkaround Units	5-48

Table 5-9A. MBU-17(V)6/P Assembly of Components

Order of Assembly	Component/Assembly to be Installed	Paragraph Reference
1	Offset Bayonets and Bayonet Receivers	5-42
2	M-101/AIC Microphone Assembly	5-44
3	M22442/33-4707 Cable Assembly	5-47
4	MS27796 Connector	5-50
5	Positive Pressure and Miniature Regulators	5-50

Table 5-9B. MBU-17(V)8/P Assembly of Components

Order of Assembly	Component/Assembly to be Installed	Paragraph Reference
1	Offset Bayonets and Bayonet Receivers	5-42
2	P/N N100493-00 10Volt Microphone Assembly	5-45A
3	CX-4434/U-16 In. Cable Assembly	5-46
4	MC-3A Connector for Panel-Mounted Regulators and Walkaround Units	5-48

a. Assure proper mask size has been issued (refer to paragraph 5-35).

b. Check fit of nape strap.

11. Using the receiver as a template, mark position of the remaining hole in the right and left hand receivers onto the helmet shell surface with a lead pencil. Have aircrewmember remove helmet and mask. Detach earcups from helmet shell interior and remove installed receivers.

NOTE

A small amount of RTV may be applied to the first few threads of screws prior to installation.

12. Drill remaining holes following procedures detailed in step 7 above. Install spacers and receivers onto helmet shell at drilled locations using screws, lock washers, and backup plates. Tighten mounting screws securely ensuring receiver and spacer conform to the contour of the helmet surface.

13. Glue down pile fastener tape over backup plate.

14. Replace earcup assemblies.

15. Perform functional check in accordance with paragraph 5-62.

WARNING

When mask is issued temporarily for transporting passengers or crewmembers or if worn for a trial fitting, the straps need not be cut but will be folded under and tacked to prevent possible injury to face and eyes during bailout or ejection.

16. Cut excess adjustment strap to aircrew preference but, not less than 1 1/2-inches.

17. Sear cut end of each strap.

18. If desired by aircrewman, oval shaped opening in buckle may be tacked to the strap using 2 turns of size E nylon thread (V-T-295), doubled. Tie with surgeon's knot and secure with square knot.

5-43. FABRICATION AND INSTALLATION OF BAYONET RECEIVER SHIMS. These shims provide increased bayonet receiver height to alleviate edge roll induced bayonet/bayonet receiver interface problems. Fabricate shims as follows:

Materials Required

Quantity	Description	Reference Number
1	Spacer, Bayonet	80B4858 NIIN 01-141-5916
4	Screw, Pan Head, 6-32 x 0.500 Inch, Black	MS51957-30B NIIN 00-469-5382
As Required	Adhesive, Polychloroprene, Class 3	MIL-A-5540 NIIN 00-515-2246
As Required	Adhesive, RTV 102/732	MIL-A-46106 NIIN 00-877-9872

NOTE

Shims are fabricated from spacers provided in kit P/N 80B4858. Shims are intended for use by aircrew experiencing difficulty inserting the bayonet into the bayonet receiver due to helmet shell edge roll interference.

1. Remove spacers from the package and perform the following procedure on each spacer.

a. Position a spacer between the jaws of a bench vise with one raised projection facing the technician and clamp in place. Using a rotary hand tool (dremel) with a grinding drum or a rough cut hand file, grind or file raised projection flush with adjacent surface of spacer. Loosen vise and position remaining raised projection into position, clamp in place and repeat grinding/filing procedure.

b. Smooth uneven surfaces to a uniform height using a jeweler's file.

2. Detach right and left earcups from helmet shell earcup cavity pile fastener material and position clear of work area. Pull installed pile fastener material away from the interior surface of the earcup cavity and fold clear of work area.

3. Remove four screws, lock washers and backup plates securing installed spacers and receivers to helmet shell exterior, discard screws but retain remaining items for use during reinstallation.

NOTE

A small amount of RTV may be applied to each screw prior to adding lock washer and backup plate.

4. Using screws P/N MS51957-30B, lock washers and backup plate, reinstall shim, spacer and receiver onto helmet shell exterior. Ensure concave surface of shim is flush with helmet shell exterior prior to securing in place.

5. Cement pile fastener material into place on interior surface of earcup cavity.

5-43A. VISOR/MASK INTERFACE ADJUSTMENT.

In order to function correctly as a system, the three components must interface properly. Occasionally, trimming of the lower edge of the visor to optimize visor/mask interface is required. To select the correct helmet and visor combination for the aircraft being flown, refer to chapter 4, Table 4-1. Helmet Configuration Matrix, and Table 4-2. Helmet Application Matrix. To check for proper visor/mask interface, proceed as follows:

NOTE

When conducting the visor/mask interface check, the aircrewmember should wear aviator's sunglasses or their personal prescription glasses to ensure helmet and mask fit are adjusted to accommodate their usage.

1. Have aircrewmember don helmet and attach oxygen mask and don glasses. Lower visor to in-use position, check that the visor contacts the mask evenly across the nose-bridge, with no visible light leakage. Extended portions of the visor lens should not exert downward pressure on the mask cheek flaps.

2. Check for interference between the visor and the aircrewmember's glasses, adjust helmet and mask fit to aircrewmember's satisfaction.

3. If adjustments to the standard visor are necessary perform the following steps:

a. Lower visor to in-service position.

b. Note areas where visor contacts mask or where light leaks exist, mark areas to be trimmed with a china-marking pen.

CAUTION

Care must be taken during trimming and sanding procedures to avoid scratching or otherwise marring the visor lens.

c. Remove visor lens from helmet and position helmet clear of work area.

WARNING

The rotary hand tool is an eye hazard and can also cause severe lacerations. Keep hands clear of moving parts and wear safety glasses while operating the rotary tool.

d. Using a rotary hand tool (dremel), carefully grind away marked areas of the visor lower edge trim marked previously. Remove no more than 1/8 inch of visor material at a time. Trim visor edge slowly, ensure ground edges are even. Visually verify visor/mask interface frequently to prevent over-trimming. Once proper fit has been achieved, remove sharp edges from trimmed areas using No. 240 grit sandpaper.

THIS PAGE INTENTIONALLY LEFT BLANK.

5-44. INSTALLATION OF M-101/AIC MICROPHONE ASSEMBLY. To install the M-101/AIC microphone assembly proceed as follows:

Materials Required

Quantity	Description	Reference Number
1	Microphone	M-101/AIC (CAGE 81349) NIIN 00-843-9957
2	Screw, Machine 2-56 x 5/16-Inch Long	MS35275-204 (CAGE 96906) NIIN 00-948-4042
As Required	Adhesive Silicone, Type III, RTV 3145, Clear	MIL-A-46146 NIIN 00-117-8510
	-or-	
As Required	Adhesive Silicone, Type III, RTV 3145, Gray	MIL-A-46146 NIIN 00-145-0020

CAUTION

When removing receptacle assembly be careful not to damage gasket.

1. Remove two screws from receptacle assembly.

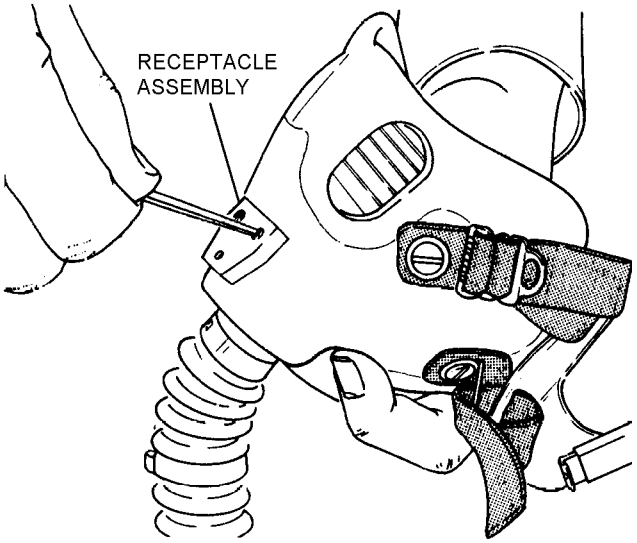

Step 1 - Para 5-44 5p44s1

2. Separate microphone bracket from receptacle assembly.

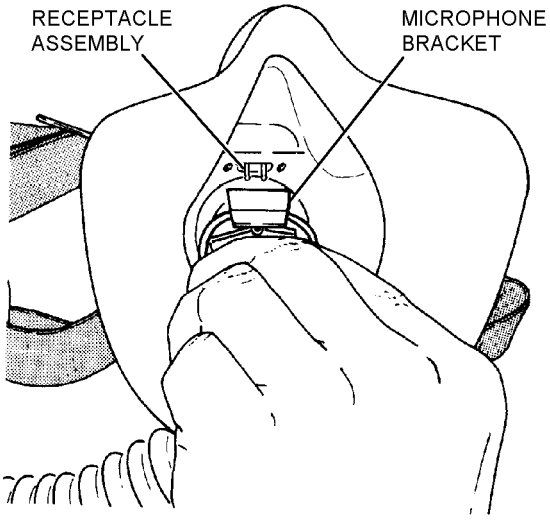

Step 2 - Para 5-44 5p44s2

3. Install microphone onto microphone bracket (supplied with mask), secure with the two screws, then tighten two setscrews.

NOTE

Ensure that the two microphone set screws, which secure the microphone assembly to microphone bracket posts, are tight. To preclude possible electric shock to aircrewmembers, apply small amount of RTV sealant over head of set screws. Allow minimum 12 hours for sealant to cure.

Aircrewmembers may experience a slight electrical shock when the face or lips touch the microphone set screws. In these cases, install the microphone backwards such that the set screws face away from the mouth. The microphone should perform satisfactorily when speaking into either side.

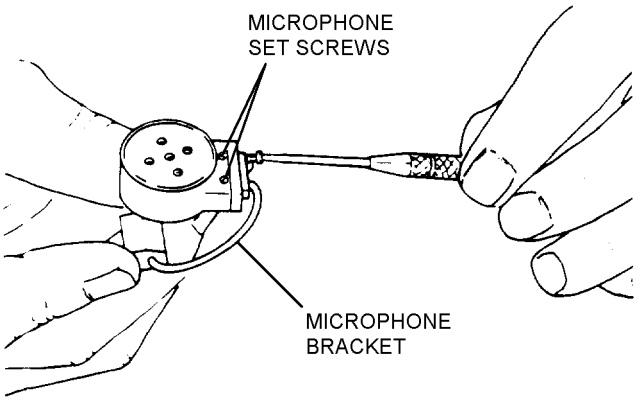

Step 3 - Para 5-44 5p44s3

CAUTION

Ensure that screws are tight enough to form a good seal between connector and hardshell, but do not strip screws or crack receptacle. Over tightening may also cause damage to internal communication wires.

4. Place receptacle assembly on hardshell of mask and install microphone bracket into mask and onto receptacle assembly. Ensure proper seating of receptacle assembly and good gasket seal. Attach with two screws removed during step 1.

NOTE

Some aircrewmembers may experience high noise levels in the oxygen mask. Noise level can be reduced by proper positioning of the M-101/AIC microphone.

5. Position M-101/AIC microphone so that it is not in the direct line of oxygen flow. Push microphone back against oxygen mask hardshell.

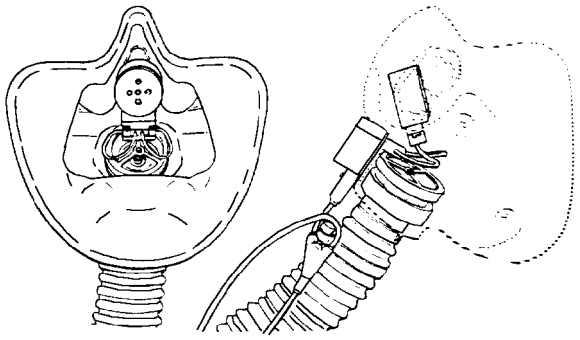

5p44s5

Step 5 - Para 5-44

5-45. INSTALLATION OF M-101/AIC MICROPHONE ASSEMBLY AND AM-7067A/A AMPLIFIER ASSEMBLY. To install the M-101/AIC microphone assembly and AM-7067A/A amplifier assembly, proceed as follows:

Materials Required

Quantity	Description	Reference Number
1	Microphone Assembly	M-101/AIC (CAGE 81349) NIIN 00-843-9957
2	Screw, Machine 2-56 x 5/16-Inch Long	MS35275-204 (CAGE 96906) NIIN 00-948-4042
1	Amplifier Assembly, AM-7067A/A	P/N M23595/3-1 (CAGE 03487) NIIN 01-310-6240 -or- P/N 765AS287-1 (CAGE 30003)
1	Gasket, Amplifier	NIIN 01-113-8364
2	Screw, Machine 2-56 x 3/4-Inch Long	MS35275-209 NIIN 00-941-3545
As Required	Adhesive Silicone, Type III, RTV 3145, Clear -or-	MIL-A-46146 NIIN 00-117-8510
As Required	Adhesive Silicone, Type III, RTV 3145, Gray	MIL-A-46146 NIIN 00-145-0020

1. Remove two screws from receptacle assembly.

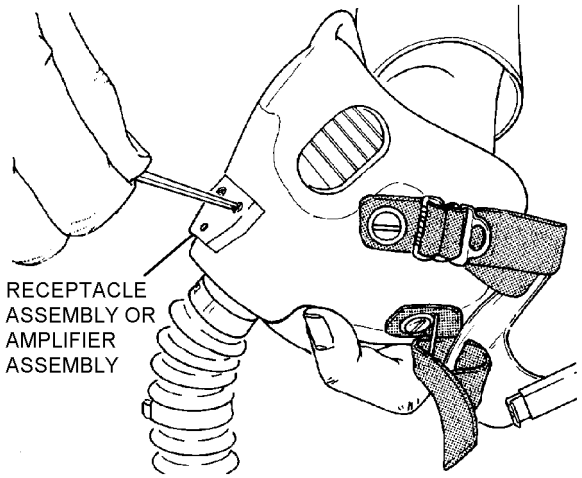

5p45s1

Step 1 - Para 5-45

2. Separate microphone bracket from receptacle assembly.

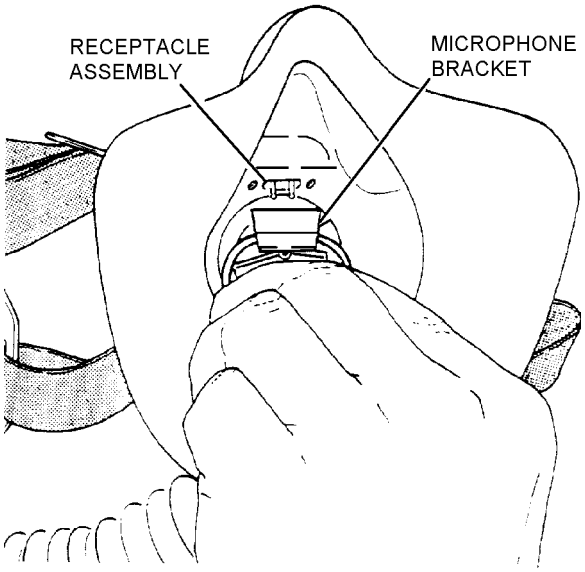

5p45s2

Step 2 - Para 5-45

3. Install microphone onto microphone bracket (supplied with mask), secure with two screws (No. 2-56 x 5/16 lg.), then tighten two microphone setscrews.

NOTE

Ensure that the two microphone set screws, which secure the microphone assembly to microphone bracket posts, are tight. To preclude possible electric shock to aircrewmember, apply small amount of RTV sealant over head of set screws. Allow minimum of 12 hours for sealant to cure.

NOTE

Aircrewmembers may experience a slight electrical shock when the face or lips touch the microphone set screws. In these cases, install the microphone backwards such that the set screws face away from the mouth. The microphone should perform satisfactorily when speaking into either side.

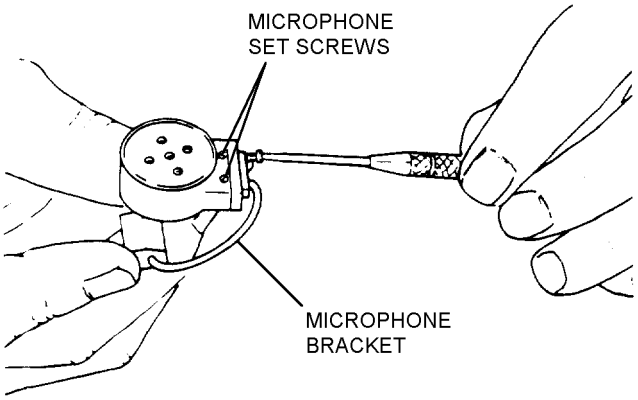

5p45s3

Step 3 - Para 5-45

NOTE

Amplifier gaskets can be ordered separately. Care must be exercised when removing and installing.

4. Place amplifier gasket onto amplifier.

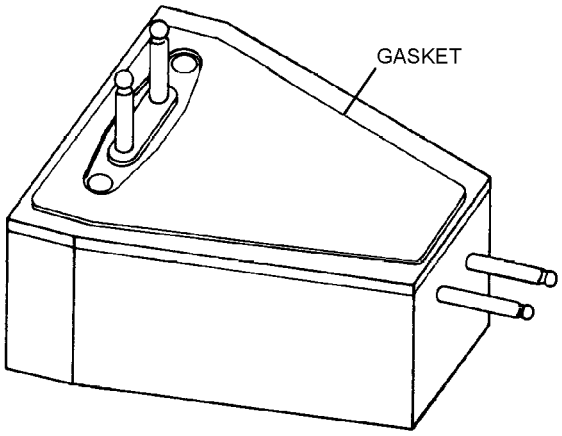

5p45s4

Step 4 - Para 5-45

CAUTION

Ensure that screws are tight enough to form a good seal between amplifier and hardshell, but do not strip screws or crack amplifier.

NOTE

The screws removed during step 1 are not long enough for attachment of amplifier.

5. Install microphone and bracket into mask and onto amplifier. Ensure proper seating of amplifier and good gasket seal. Attach with two screws (no. 2-56 x 3/4 lg.)

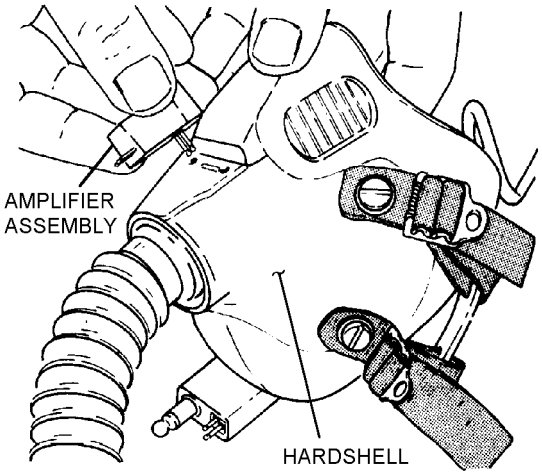

Step 5 - Para 5-45 5p45s5

5-45A. INSTALLATION OF P/N N100493-00 MICROPHONE/AMPLIFIER, 10 VOLT ASSEMBLY, ON THE MBU-17(V)8/P (MV-22 OXYGEN MASK). To install the microphone/amplifier, 10 volt assembly, P/N N100493-00 on the MBU-17(V)8/P oxygen mask for use in the MV-22 aircraft, proceed as follows:

Materials Required

Quantity	Description	Reference Number
1	Microphone/ Amplifier, 10 Volt, Oxygen Mask (Note 1)	P/N N100493-00, NIIN TBD
2	Screw Machine, 2-56 x 3/4 inch	P/N MS35275-209, NIIN 00-941-3545
1	Cable, Branched, Electrical	CX-4434/U 16-inch NIIN TBD
1	Connector	MS27796, NIIN 01-703-4187

Notes: 1. Microphone/Amplifier, 10 Volt Assembly, P/N N100493-00 is commercially available from Gentex Corporation, Derry, NH Telephone (603) 434-3002.

1. Loosen and remove two screws from the receptacle assembly. Discard screws.

2. Separate the M-101/AIC microphone bracket from receptacle assembly. Discard receptacle and microphone bracket.

3. Position amplifier gasket on amplifier.

CAUTION

Ensure that screws are tight enough to form a good seal between the amplifier and the mask hardshell, but do not strip screws or crack amplifier.

NOTE

The screws removed during step 1 are not long enough for attachment of the amplifier.

4. Place amplifier with gasket into position on the mask hardshell with the electrical contact pins protruding into the interior of the mask facial cavity.

5. While holding amplifier in place on hardshell exterior, push microphone bracket firmly onto amplifier contact pins.

6. Insert 2-56 x 3/4-inch long screws through amplifier body into microphone bracket and tighten. Ensure proper seating of amplifier and good gasket seal.

5-46. INSTALLATION OF CX-13154/A AND CX-4434/U CABLE ASSEMBLIES.

Materials Required

Quantity	Description	Reference Number
1	Cable Assembly, (CX-13154/A)	P/N 765AS380-1 (CAGE 30003)
1	Cable Assembly, 16-Inch (CX-4434/U)	P/N 57C12661-1-2-1-4 (CAGE 80058) NIIN 00-890-8614
1	Elastrator	P/N 00-6297 (CAGE 53655) NIIN 01-124-0649

1. To install the CX-13154/A and 16-inch CX-4434/U cable assemblies, proceed as follows:

CAUTION

Care should be taken not to overexpand cable guides with elastrator. Open only enough to pass cable assembly through opening.

a. Pass elastrator through opening in upper cable guide and stretch open.

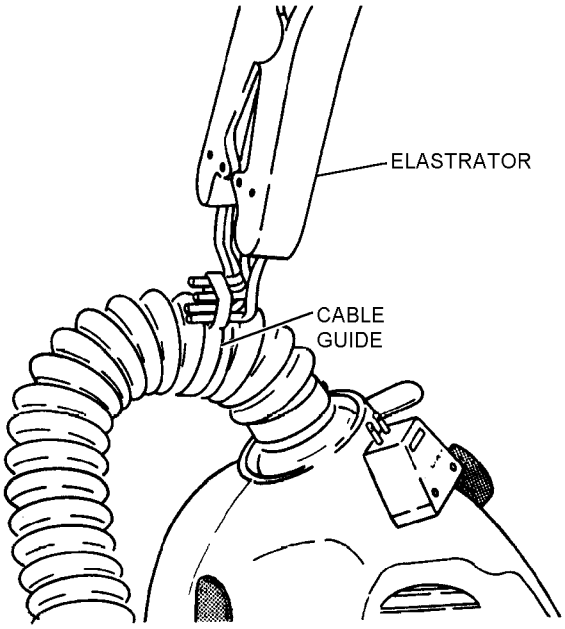

Step 1a - Para 5-46 5p46s1a

b. Install nub or yoke upper portion of cable assembly into opening in cable guide and remove elastrator.

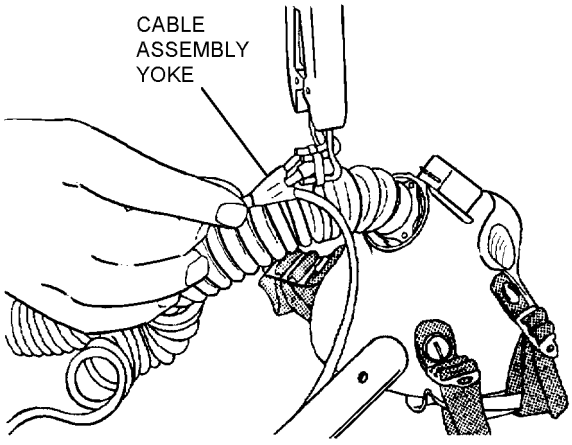

Step 1b - Para 5-46 5p46s1b

c. Let cable assembly hang loose off delivery tube.

d. Plug cable assembly into corresponding receptacle assembly, amplifier assembly, or cable assembly.

5-47. INSTALLATION OF CX-13126A/A, CX-13127/A, OR M22442/33-4707 CABLE ASSEMBLIES.

NOTE

The CX-13126/A cable was modified by Avionics Change No. 2748. The new cable is designated CX-13126A/A.

THIS PAGE INTENTIONALLY LEFT BLANK.

Materials Required

Quantity	Description	Reference Number
1	Cable Assembly, (CX-13126A/A)	P/N M22442/26-3 NIIN 01-209-3117
1	Cable Assembly, (CX-13127/A)	P/N M22442/42-1 NIIN 01-309-4909
1	Elastrator	P/N 00-6297 (CAGE 92114) NIIN 01-124-0649
As Required	Tape, Electrical, Black, 3/4-Inch	MIL-I-24391 NIIN 00-419-4291

1. To install the CX-13126A/A and CX-13127/A cable assemblies, proceed as follows:

CAUTION

Care should be taken not to overexpand cable guides with elastrator. Open only enough to pass cable assembly through opening.

a. Pass elastrator through opening in lower cable guide and stretch open. Insert upper portion of cable assembly through opening in cable guide and feed cable through guide until approximately 6 inches of cable remains below lower cable guide. Remove elastrator.

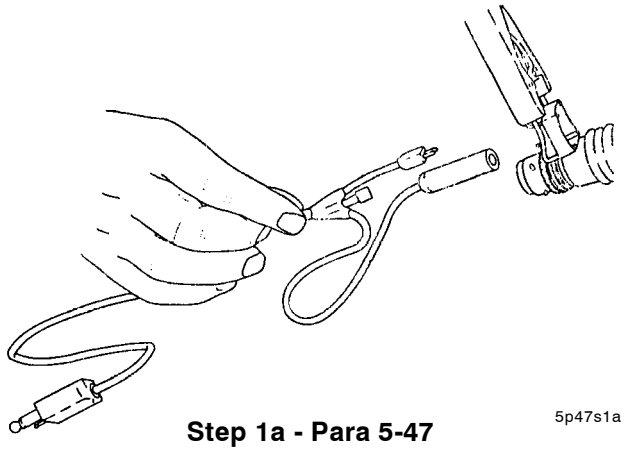

5p47s1a

Step 1a - Para 5-47

b. (CX-13127/A only) Prior to installing cable to upper cable guide, secure U-385/U connector by bending back communication cable and fastening with electrical tape to the main cable.

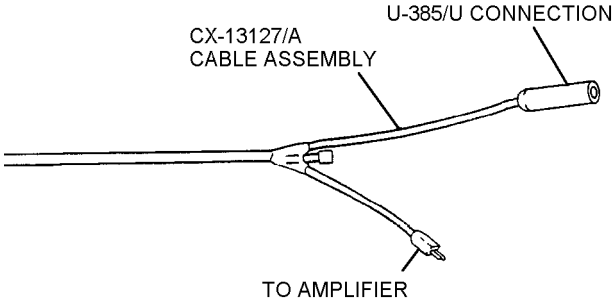

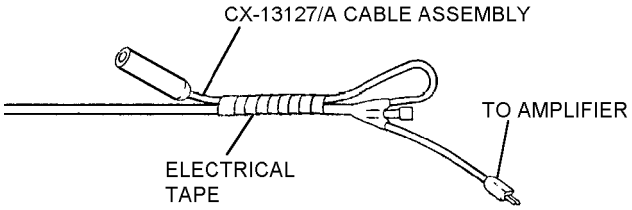

5p47s1b

Step 1b - Para 5-47

c. Wrap cable assembly around delivery tube.

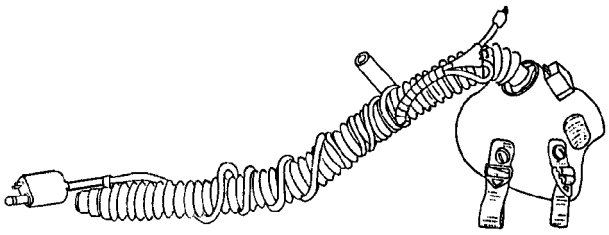

5p47s1c

Step 1c - Para 5-47

d. Pass elastrator through opening in upper cable guide and stretch open.

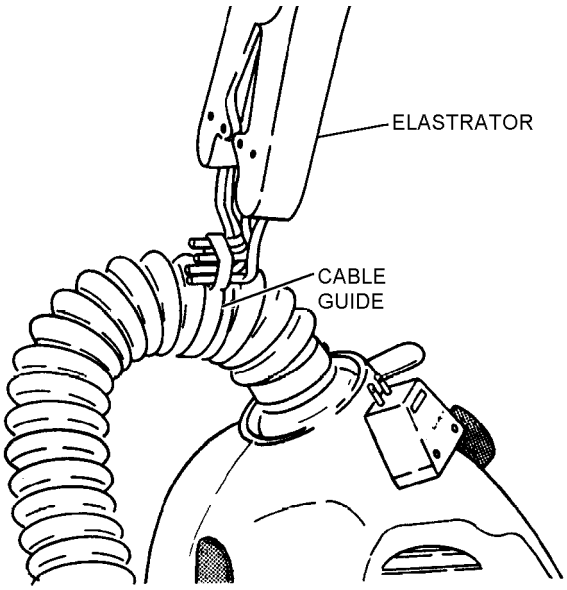

5p47s1d

Step 1d - Para 5-47

e. Place nub of yoke from upper portion of cable assembly through opening of upper cable guide and remove elastrator.

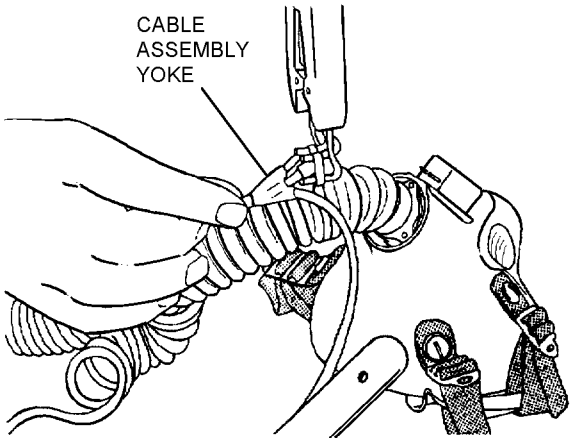

5p47s1e

Step 1e - Para 5-47

f. Plug cable assembly into corresponding receptacle assembly, amplifier assembly, or cable assembly.

5-48. INSTALLATION OF THE MC-3A OR CRK-90 CONNECTOR FOR PANEL-MOUNTED REGULATORS, WALKAROUND UNITS, AND BAILOUT BOTTLES. To install the connector, proceed as follows:

NOTE

If the oxygen mask bag is to be used, it must be fabricated and installed prior to installing the MC-3A connector. Refer to paragraph 5-85.

Materials Required

Quantity	Description	Reference Number
1	Connector (Type MC-3A)	NIIN 00-694-8121 MS22016-1
	-or-	
	Connector (Type CRK-90)	P/N 123AB50534-5 (CAGE 26912)
1	Hose Clamp Pliers	NIIN 01-073-4187 P/N 450-813 (CAGE 53655)

NOTE

If installing electrical tiedown strap instead of hose clamp (P/N 450-134A or P/N MS22064-5), pliers are not required.

1. Route cord outside tube assembly. Adjust cord so that there is no more than 1-inch extension in delivery tube when pulled from each end.

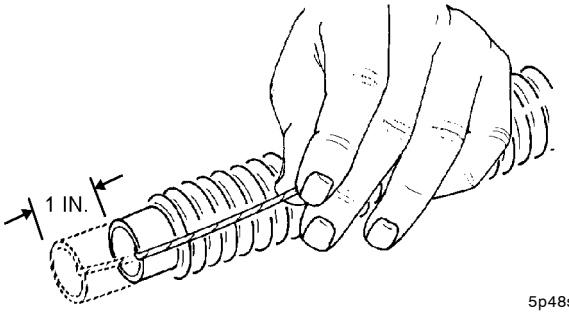

5p48s1

Step 1 - Para 5-48

2. Install connector into tube assembly.

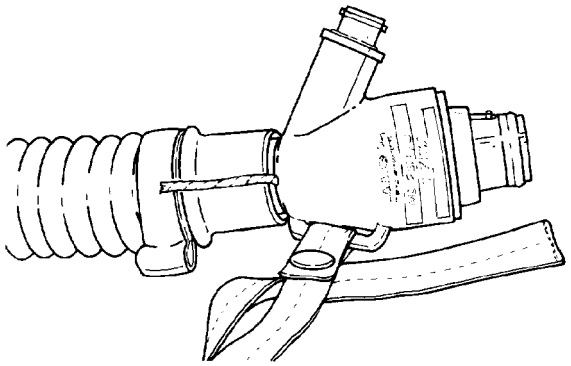

5p48s2

Step 2 - Para 5-48

WARNING

Do not reuse two locking position hose clamps.

CAUTION

Tighten mask hose clamp only enough to retain and seal the delivery tube on the connector. An excessively tightened clamp may damage the tube or connector.

NOTE

Electrical tiedown straps may be used in place of mask hose clamps (P/N 450-134A or P/N MS22064-5). Refer to paragraph 5-83 for tiedown strap installation.

3. Using hose clamp pliers, install hose clamp over nylon cord and lower end of tube assembly and tighten.

4. Cut off excess nylon cord so that there is no more than 1/2 inch of cord extending past clamp.

5. Lower cable guide over lower hose clamp.

5-49. INSTALLATION OF CRU-79/P SERIES MINIATURE REGULATOR AND REGULATOR-TO-SEAT KIT HOSE ASSEMBLY. To install the CRU-79/P miniature regulator and regulator-to-seat kit hose assembly, proceed as follows:

NOTE

If the oxygen mask bag is to be used, it must be fabricated and installed prior to installing the miniature regulator. Refer to paragraph 5-84. The installation of the CRU-79/P miniature regulator is shown in these procedures. The installation of other miniature regulators is similar.

THIS PAGE INTENTIONALLY LEFT BLANK.

Materials Required (Cont)

Quantity	Description	Reference Number
1	Miniature Oxygen Breathing Regulator (CRU-79/P)	P/N 900-002-025-05 -or- P/N 900-002-025-03 -or- 29267-A1 -or- 3260024-0101
1	Hose Clamp Pliers	P/N 450-813 (CAGE 53655) NIIN 01-073-4187
1	Regulator-to-Seat Kit Hose Assembly	P/N 12080-2 (CAGE 31441) NIIN 00-915-4603 -or- P/N 33C1178-1 (CAGE 80206) NIIN 00-915-4603
1	Locknut	P/N B122-2P2 NIIN 00-715-2761
1	Nipple Adapter	P/N 1-8FGD NIIN 00-433-2506
1	Elbow, 90°	AN95-1D

NOTE

If installing electrical tiedown strap instead of hose clamp (P/N 450-134A or P/N MS22064-5) pliers are not required.

1. Route cord outside tube assembly. Adjust so that there is no more than 1-inch extension in delivery tube when pulled from each end.

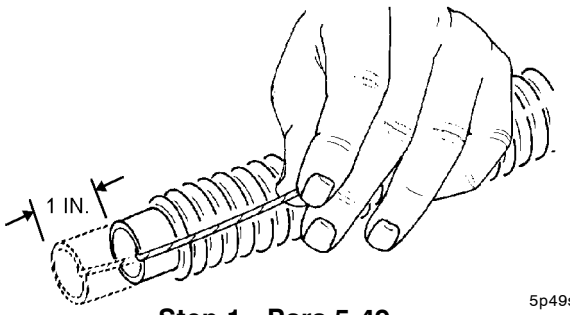

5p49s1

Step 1 - Para 5-49

NOTE

The CRU-79/P regulator is shown here for illustration purposes only.

2. Install CRU-79/P regulator into tube assembly.

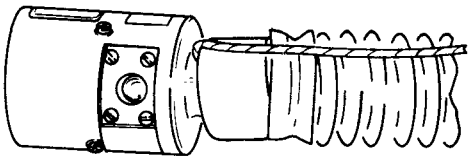

5p49s2

Step 2 - Para 5-49

WARNING

Do not reuse two locking position hose clamps.

CAUTION

Tighten mask hose clamp only enough to retain and seal the delivery tube on the CRU-79/P regulator. An excessively tightened clamp may damage the tube or regulator assembly. Be careful not to bend hook on clamp during installation.

NOTE

Electrical tiedown straps may be used in place of mask hose clamps (P/N 450-134A or P/N MS22064-5), refer to paragraph 5-83 for tiedown strap installation.

3. Using hose clamp pliers, install hose clamp over nylon cord and lower end of tube assembly and tighten. Ensure hook is fully inserted into notch of clamp, and that hook is not bent.

4. Cut off excess nylon cord so that there is no more than 1/2 inch of cord extending past clamp.

5. Lower cable guide over lower hose clamp.

NOTE

(CRU-79/P P/N 900-002-025-05 only) The locknut is not required on the 90° elbow. The 90° elbow male threads shall be wrapped with two turns of anti-seize tape (MIL-T-27730) prior to installation step 8.

(CRU-79/P P/N 900-002-025-05 only) The type regulator already has a 90° elbow installed, steps 9 and 10 apply for installation only.

During installation of the locknut onto the fittings installed steps 6, 7, and 8. The locknut should be threaded onto the seat-kit hose, 90° elbow and adapter hand tight. Ensure a minimum of two to three full threads are showing on fittings prior to installation of components, the locknuts may have to be tightened to achieve the two to three threads.

6. Thread one locknut onto regulator-to-seat kit hose connection. Teflon face on locknut shall face toward female port of adapter assembly. See figure 5-10.

7. (CRU-79/P series regulators without installed 90° elbow only) Thread one locknut onto male-threaded portion of 90° elbow. Teflon face of locknut shall face toward the regulator during installation of the 90° elbow. See figure 5-10.

8. (CRU-79/P series regulators without installed 90° elbow only) Thread 90° elbow into inlet port of regulator hand tight. Using a wrench tighten 90° elbow a minimum of one full turn. An additional one turn can be used as required until 90° elbow is tight and orientation of female port of the fitting is pointing the opposite direction of the regulator outlet. Tighten locknut until flush with regulator body, once flush tighten locknut an additional one quarter of a turn until tight. See figure 5-10.

9. (All CRU-79/P series regulators) Thread one locknut onto male-threaded portion of nipple adapter coupling (see figure 5-10). Teflon face on locknut shall face toward 90° elbow during installation. Thread nipple adapter coupling into 90° elbow hand tight. Using a wrench tighten adapter coupling one turn. An additional one turn can be used if required until adapter is tight. Tighten locknut until flush with 90° elbow, once locknut is flush tighten locknut an additional one quarter of a turn or until tight. See figure 5-10.

10. Thread regulator-to-seat-kit hose into nipple adapter a minimum of two full turns until tight and proper orientation is achieved (see figure 5-10). Tighten locknut until locknut is flush with the nipple adapter, once locknut is flush with nipple adapter tighten locknut an additional one quarter of a turn or until tight.

11. Connect communication leads as required.

5-50. INSTALLATION OF THE TORSO/CHEST MOUNTED OXYGEN REGULATOR AND REGULATOR-TO-SEAT KIT HOSE ASSEMBLY. To install the oxygen regulator and regulator-to-seat kit assembly, proceed as follows:

NOTE

If the oxygen mask bag is to be used, it must be fabricated and installed prior to installing the regulator. Refer to paragraph 5-84.

The S-3 Series aircraft has been authorized to use the CRU-79/P miniature regulator. Refer to paragraph 5-49 for installation instructions.

Materials Required

Quantity	Description	Reference Number
1	Diluter Demand Oxygen Chest-Mounted Regulator (CRU-82/P)	P/N 326005-0401 NIIN TBA
1	Demand Oxygen Torso-Mounted Regulator (Type CRU-103/P)	P/N F241-2300-3 (CAGE 04577)
	-or-	
1	Positive Pressure Torso-Mounted Regulator (Type CRU-88/P)	P/N 2900W000-001 (CAGE U1605)
1	Regulator-to-Seat Kit Hose Assembly	P/N 57012-3-2 NIIN 01-407-0686 -or- P/N MBEV148020 (CAGE W1604) NIIN 01-169-6129 -or- P/N A11206-2 (CAGE 28845) NIIN 01-169-6129
1	Elbow, 45°	AN915-1D
1	Elbow, 90°	AN95-1D
1 (If Required)	Connector	MS27796 NIIN 01-730-2247
1 (If Required)	Hose Clamp Pliers (See note)	P/N 450-813 (CAGE 53655) NIIN 01-073-4187
1	Locknut	P/N B122-2P2 NIIN 00-715-2761
1	Nipple Adapter	P/N 1-8FGD NIIN 00-433-2506
1	Adapter, Straight Flared	P/N 1643340-1 or P/N 1643340-2
1	Adapter, 90° Elbow	P/N 1654461-1
As Required	Tape, Anti-Seize	MIL-T-27730

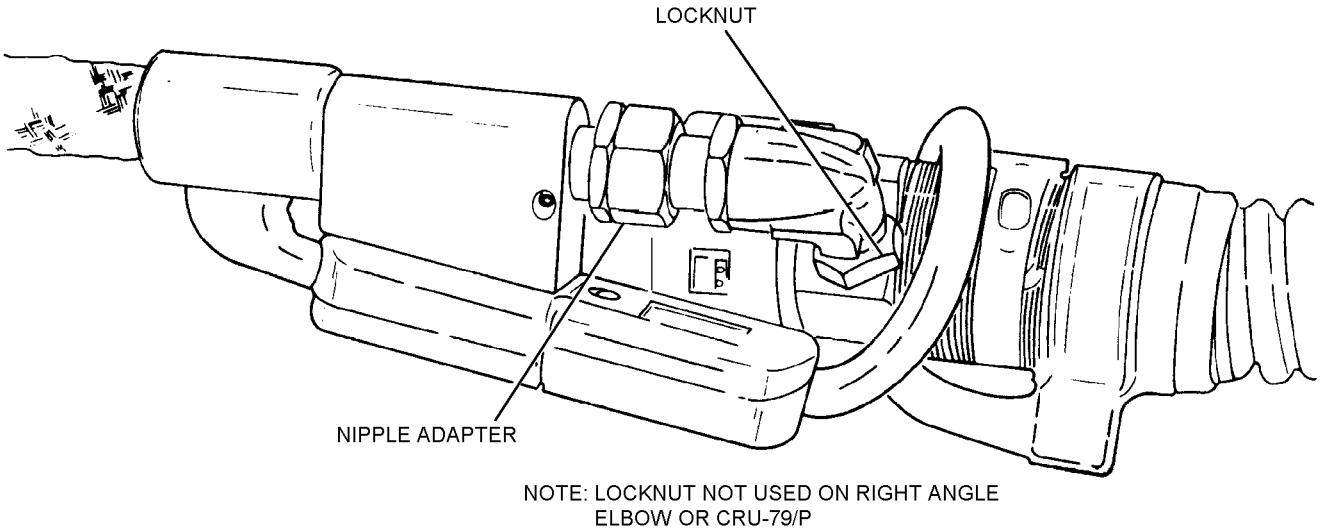

5-10

Figure 5-10. Assembly of Hoses to the CRU-79/P Series Regulator

Figure 5-11. Deleted

NOTE

Aircrewmembers may choose one of two adapters available for use on the CRU-82/P regulator, P/N 326005-0401. One is the straight flared adapter, P/N 1643340-1 and -2. The other is a modified 90 degree elbow adapter, P/N 1654461-1. The 90 degree adapter is authorized only if its use will not cause excessive bends while routing the seat kit hose.

If installing electrical tie down strap instead of hose clamp (P/N 450-134A or P/N MS22064-5), pliers are not required.

CAUTION

Care should be taken when removing pin from connector not to damage shell of connector.

1. Using 3/32-inch drive punch, remove pin from connector.

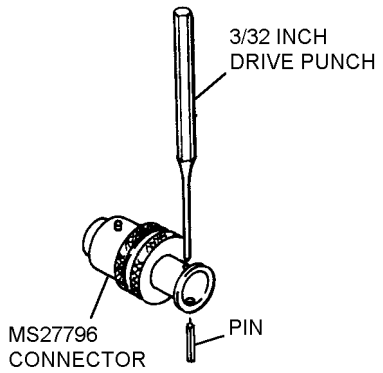

5p50s1

Step 1 - Para 5-50

CAUTION

Care should be taken to avoid damage to connector shell when inserting pin into connector.

2. Install cord and snap assembly to MS27796 connector; replace pin and slide connector into delivery tube.

3. Ensure that there is no more than 1-inch extension in delivery tube when pulled from each end. If necessary, remove connector from delivery tube and adjust length of cord.

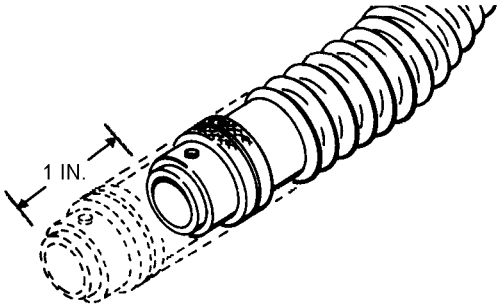

5p50s3

Step 3 - Para 5-50

WARNING

Do not reuse two locking position hose clamps.

CAUTION

Tighten mask hose clamp only enough to retain and seal the delivery tube on the CRU-79/P regulator. An excessively tightened clamp may damage the tube or regulator assembly.

Carefully avoid puncturing or otherwise damaging delivery tube with hose clamp tool or screwdriver.

NOTE

For ease of removing (or installing) hose clamps, place a small screwdriver under and slightly behind the hook.

Electrical tiedown straps may be used in place of mask hose clamps (P/N 450-134A or P/N MS22064-5), refer to paragraph 5-83 for tiedown strap installation.

4. Using hose clamp pliers, install hose clamp over lower end of tube assembly and installed MS27796 connector and tighten.

5. Lower cable guide over lower hose clamp.

6. Inspect regulator inlet and outlet for foreign objects, dirt, corrosion, bends, dents, cracks, and other damage. Ensure that regulator inlet filter screen is properly installed.

CAUTION

When attaching regulator to oxygen mask assembly, cut and discard cord holding dust cap to regulator housing. Retain dust cap in organizational work center and use only for storage or when regulator has been removed from the oxygen mask assembly for maintenance. Do not allow dust cap to remain on regulator when regulator and mask assembly are joined as a unit.

7. With a push-down, twisting motion, install regulator to the MS27796 connector on end of oxygen mask delivery hose.

NOTE

LOX aircraft only with CRU-79/P and CRU-103/P regulators, refer to paragraph 5-49 for regulator oxygen hose connection.

8. (CRU-82/P Regulator P/N 326005-0401 only.) Install inlet adapter as follows:

CAUTION

When installing inlet adapters P/N 1643340-1 or P/N 1654461-1 in CRU-82/P (P/N 326005-0401) regulator housing, use extreme care not to strip thread of regulator housing inlet.

a. (Straight flared adapter P/N 1643340-1 only.) Apply two turns of anti-seize tape (MIL-T-27730) on inlet pipe threads of adapter. Install inlet adapter in regulator housing finger tight then secure using wrench. Tighten a maximum of one to two turns. See figure 5-12.

WARNING

Excessive bends in seat kit hose causes increased wear and premature hose and communication lead failure.

NOTE

Aircrewmember must be present during installation of modified 90 degree elbow adapter, P/N 1654461-1, to ensure proper orientation of adapter.

b. (90 degree elbow adapter, P/N 1654461-1 only.) Apply two turns of anti-seize tape (MIL-T-27730) on adapter pipe threads. Install adapter in regulator housing and tighten finger tight.

c. Using wrench, secure adapter by tightening a maximum of one turn. When adapter is positioned in desired orientation, tighten nut/locknut flush to regulator housing. Once flush, tighten locknut an additional one quarter turn until tight. See figure 5-13.

9. For OBOGS regulators only, thread regulator-to-seat kit hose connection onto regulator nipple adapter coupling hand tight. Using two wrenches, hold inlet fitting at regulator inlet port and tighten oxygen seat kit hose B nut one to two turns maximum until tight.

10. Wrap communication lead around hose to eliminate slack, and couple together.

5-51. INSTALLATION OF THE 40-INCH CX-13017/AR CABLE ASSEMBLY. The 40-inch CX-13017/AR cable assembly completes communication between the HGU-68(V)3/P helmet cable (CX-13128A) and the 32-inch CX-13017/AR cable assembly attached to the RSSK-8 oxygen hose. To install the 40-inch CX-13017/AR cable assembly proceed as follows:

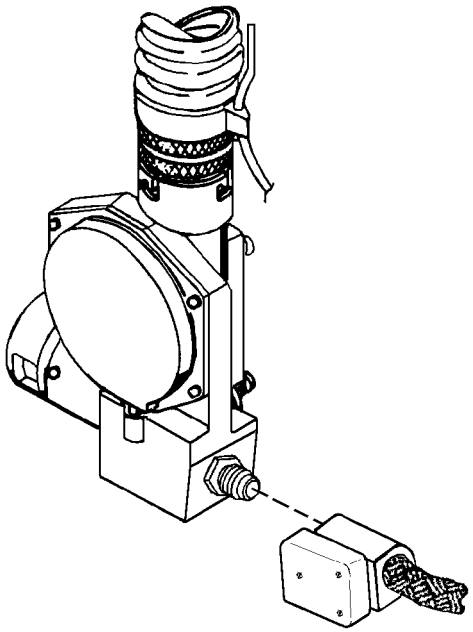

5-12

Figure 5-12. Assembly of Hoses, Regulator, and Straight Flared Adapter (P/N 1643340-1)

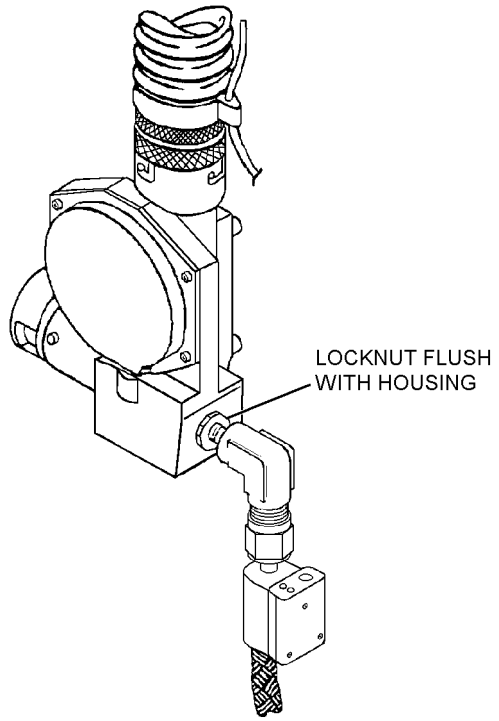

5-13

Figure 5-13. Assembly of Regulator (P/N 326005-0401), Hose, and Modified 90 Degree Elbow Adapter (P/N 1654461-1)

Materials Required

Quantity	Description	Reference Number
1	CX-13017/AR 40-Inch Cable Assembly	MIL-C-81866AS P/N 1099AS102 (CAGE 30003) -or- CX-13017/AR
2	Strap, Tiedown, Electrical	MS3367-1-9

1. Position the 40-inch cable assembly on the regulator-to-seat kit hose assembly (P/N 33C1178), so the male communication jack extends just below the fitting on the lower end of the regulator-to-seat kit hose.

2. Secure the 40-inch cable assembly to the regulator-to-seat kit hose with two tiedown straps.

3. Ensure straps are tight; cut off excess length of tiedown straps after tightening.

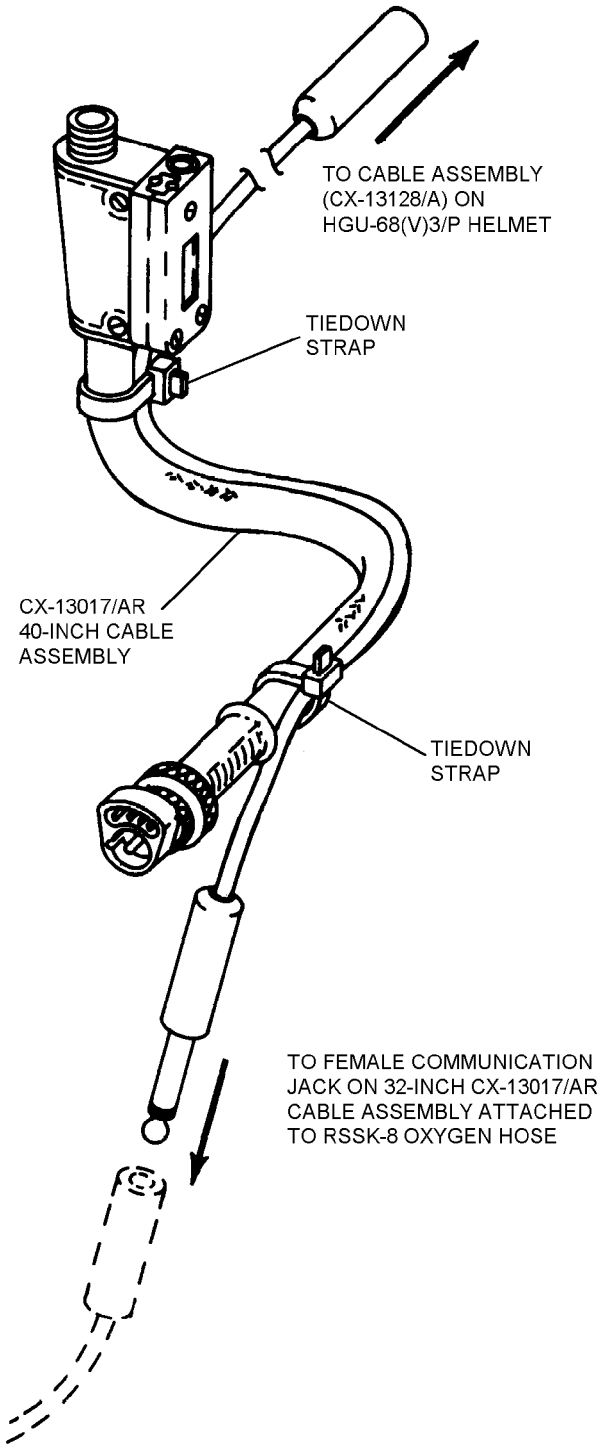

5p51s1

Steps 1 thru 3 - Para 5-51

5-52. FABRICATION AND INSTALLATION OF OXYGEN MASK SECURING FASTENER. To provide a means of fastening the oxygen mask to the PCU-33/P series and PCU-56/P series torso harnesses to secure and protect the mask from accidental exposure to contamination, proceed as follows:

Materials Required

Quantity	Description	Reference Number
1	Button, Snap Fastener	MS27980-1B NIIN 00-359-6844
1	Socket, Snap Fastener	MS27980-6B NIIN 00-285-6250
1	Chuck, Socket	P/N 1410 NIIN 00-144-2084
1	Die, Button	P/N 1401 NIIN 00-090-4412
1	Snap Setter	P/N A741 NIIN 00-880-0619
1	Punch, Cutting Revolving	MIL-P-2001 NIIN 00-596-9604

1. With the oxygen mask properly fit and adjusted, there is a minimum of 1 and 1/2 inches of retention harness webbing remaining.

2. On the lower left retention harness strap, measure, toward the adjustment buckle, 3/4 of an inch from the sear cut end of the retention harness webbing and place a mark at the center of the webbing.

3. At the marked location, using a revolving punch, make a hole slightly smaller than the diameter of the shaft of the snap fastener button.

4. Assemble snap fastener button and socket onto retention harness with the button outboard, install onto harness webbing with a snap setter.

Section 5-4. Modifications

5-53. GENERAL.

5-54. The oxygen mask assemblies shall be updated by comparing the assemblies with the directives listed in table 5-10.

Table 5-10. Oxygen Mask Assembly Directives

Description of Modification	Application	Modification Codes
Modification of CX-13126/A Communication Cable Assembly for quick disconnect from helmet assemblies.	MBU-14(V)1/P, and MBU-16/P oxygen mask assemblies	54-2748
Reconfiguration of oxygen masks from MBU-14(V)2/P to MBU-14(V)1/P for use by EA-6B aircrew.	MBU-14(V)2/P oxygen mask assemblies	66-474
Fabrication and Installation of an Oxygen Mask Securing Fastener to provide a means of fastening the oxygen mask to the torso harness.	All MBU-12/P Series oxygen masks used with the PCU Series torso harness.	66-560

Section 5-5. Maintenance

5-55. GENERAL.

5-56. Proper care and use of oxygen masks are essential to ensure optimum performance during routine flight operations and emergencies. Aircrew maintenance of the MBU-12/P series oxygen mask shall be limited to Preflight/Postflight inspections and routine cleaning. All other maintenance actions such as scheduled inspections, in-depth cleaning, and repairs shall be performed by qualified Organizational Maintenance personnel. All maintenance actions and inspections shall be documented in accordance with OPNAVINST 4790.2 Series. Repair, fabrication, and installation instructions to maintain serviceability are listed in table 5-11.

5-57. INSPECTION.

5-57A. Inspection of the MBU-12/P series oxygen mask consist of Place-in-Service, Preflight/Postflight, and Special Inspections.

5-57B. PLACE-IN-SERVICE INSPECTION. Prior to placing in service, the oxygen mask shall be inspected as follows:

1. Visually inspect in accordance with paragraph 5-60.

2. Disassemble and clean in accordance with paragraph 5-69.

5-58. PREFLIGHT/POSTFLIGHT INSPECTION. The Preflight/Postflight Inspection is a visual inspection performed by the aircrewmember to whom the oxygen mask, regulator and regulator-to-seat kit hose are issued. This inspection shall be performed before and after each flight in accordance with the below listed steps and paragraphs 5-60 and 5-61.

NOTE

Defects or questionable areas noted during the inspection shall be referred to the proper maintenance activity for required corrective action.

1. Check communication system and microphone for proper installation.

2. Check mask for damage and proper operation with tester and/or aircraft oxygen and communications system.

3. Check regulator-to-seat kit hose assembly for damage. Check hose for proper operation with tester and/or aircraft oxygen and communications system.

5-59. SPECIAL INSPECTION. The Special Inspection for the oxygen mask shall be conducted every 30 days by organizational level and shall consist of a visual inspection, a functional check, and a thorough cleaning of the oxygen mask assembly.

5-60. VISUAL INSPECTION OF OXYGEN MASK ASSEMBLY. To visually inspect the oxygen mask assembly, proceed as follows:

1. Inspect delivery tube for damage, cuts, breaks, dust, and dirt. Replace cut or split delivery tubes, clean dirty delivery tubes in accordance with paragraph 5-66.

2. Inspect oxygen valve for fit and seal. Replace oxygen valve if fit or seal is unsatisfactory.

3. Inspect microphone connector for damage, cracks, looseness, and proper seating. Replace damaged microphone connector.

4. Inspect strap and buckle assemblies for damage, raveled fabric, loose stitching, unsecure attachment, and bent or damaged grommets. Replace damaged items.

5. Inspect facepiece assembly for damage, cracks, and deformation. Replace defective facepiece assembly.

6. Inspect seals for separation or slippage between hardshell and rubber facepiece. Reseat seals and tighten oxygen valve nut to prevent slippage.

7. Inspect self-locking screws (readily identified as phillip's head) or tee nuts for damage. Replace damaged screws.

8. Inspect communication cord for cuts and split or abraided insulation. Small areas of abrasion may be covered with electrical tape, cuts or splits may require cable replacement.

9. Inspect offset bayonets for proper operation.

10. Check security of hose clamps. Tighten any loose clamps.

11. Inspect the MC-3A connector, if installed, for security of attachment, function, condition, and corrosion. Replace as necessary.

5-61. VISUAL INSPECTION OF REGULATOR-TO-SEAT KIT HOSE ASSEMBLY. To visually inspect the regulator-to-seat kit hose assembly, proceed as follows:

NOTE

Perform visual inspection on attached oxygen regulator in accordance with procedures contained in NAVAIR 13-1-6.4-2.

1. Inspect hose for obvious damage, wear, splits, cuts, fraying, and kinks.

2. Inspect quick disconnects for damage, corrosion, bent, loose, or missing pins.

3. Inspect for cleanliness and presence of foreign material.

4. Inspect housing for damage, cuts, nicks, discoloration, and wear.

5. Inspect metal fittings for damaged threads, rounded hexagon flats, security of attachment to regulator and corrosion.

6. If present, inspect CX-13017/AR 40-inch cable assembly for security of attachment and other obvious damage. Replace if necessary in accordance with paragraph 5-51.

5-62. FUNCTIONAL CHECK OF OXYGEN MASK ASSEMBLY. For best results, the functional check should be performed using Oxygen Hose and Communications Test Set TTU-489/E, P/N 1827AS100-1, in accordance with NAVAIR 17-15BC-22. At present, the TTU-489/E test set is the only test set available to perform this functional test. If a unit is not available, standard shop procedures should be followed to check the oxygen mask assembly.

NOTE

If no discrepancies are noted, proceed to paragraph 5-66, Cleaning. If problems are encountered, refer to table 5-12 for troubleshooting procedures. When discrepancy has been corrected, repeat functional check in accordance with NAVAIR 17-15BC-22.

1. Perform functional check of oxygen mask assembly.

5-63. FUNCTIONAL CHECK OF THE REGULATOR-TO-SEAT KIT HOSE ASSEMBLY. Perform a functional check in accordance with NAVAIR 13-1-6.3-1.

5-64. DISASSEMBLY.

5-65. DISASSEMBLY OF THE OXYGEN MASK ASSEMBLY. Disassembly of the oxygen mask assembly is performed only to the extent needed to replace a damaged item, or for cleaning in accordance with paragraph 5-66.

5-66. CLEANING AND SANITIZING.

5-67. Cleaning and sanitizing shall be performed only by trained maintenance personnel.

5-68. Cleaning and sanitizing of the oxygen mask assembly shall be accomplished as often as service conditions require, but not less than once every 30 days. Masks not on a personal issue basis shall be sanitized after each use in accordance with paragraph 5-70.

5-69. To clean and sanitize the oxygen mask assembly, proceed as follows:

Table 5-11. Repairs/Fabrications/Installations

Description of Repair/Fabrication/Installation	Application	Paragraph
Replacement of Bayonets and Bayonet Receivers	All masks (when applicable)	5-74
Replacement of M-101/AIC Microphone Assembly	All masks (when applicable)	5-75
Replacement of AM-7067/A Amplifier Assembly	All masks (when applicable)	5-76
Replacement of Cable Assemblies	All masks (when applicable)	5-77
Replacement of MS27796 Connector	All masks (when applicable)	5-79
Replacement of MC-3A or CRK-90 Connector	All masks (when applicable)	5-80
Replacement of Inhalation/Exhalation Valve Assembly	All masks (when applicable)	5-81
Replacement of Delivery Tube	All masks (when applicable)	5-82
Fabrication and Installation of Oxygen Mask Securing Fastener	All masks used with PCU-series torso harness	5-52
Fabrication of Oxygen Mask Storage Bag	All masks used with PCU-series torso harness (optional)	5-84
Installation of Oxygen Mask Storage Bag	All masks used with PCU-series torso harness (optional)	5-84

Table 5-12. Troubleshooting

Trouble	Probable Cause	Remedy
Leakage from facepiece	Loose fit	Hold mask tighter against face
		If mask is connected to a flight helmet, tighten straps on strap and buckle assemblies
	Improper mask size	Use next smaller mask size. Refer to Section 5-2
Leakage at microphone	Loose screws	Carefully tighten connector screws. Refer to Section 5-6
	Improper seating or defective microphone bracket	Check mating of microphone bracket with microphone. Refer to Section 5-6
		Check microphone connector and bracket for damage or cracks. Replace as necessary
	Damaged or misplaced gasket	Replace gasket. Refer to paragraph 5-76
Leakage from delivery tube	Loose inlet connection or loose or defective hose clamp	Tighten or secure inlet connection. Refer to Section 5-6
		Tighten or replace mask hose clamp. Refer to Section 5-6
	Damaged or deteriorated delivery tube	Replace delivery tube. Refer to paragraph 5-82
Breathing is difficult or inhalation/exhalation valve sticks	Defective oxygen valve	Replace oxygen valve assembly. Refer to paragraph 5-81
	Improperly seated valve nut or washers	Check for proper seating alignment of valve assembly. Reseat as necessary
	Restraint cord not properly secured	Check for 1-inch extension of delivery tube. Refer to paragraph 5-49, step 1
Voice communication difficult or impossible (if microphone is present)	Defective microphone connector or microphone bracket	Replace microphone connector amplifier and/or bracket if necessary. Refer to paragraphs 5-75 and 5-76
Leakage at strap screw	Defective seal on strap screws or incorrect screws	Replace strap screw and tee nut as necessary, tighten to 4 - 6 in-lbs of torque

Materials Required

Quantity	Description	Reference Number
As Required	Gauze Pads, Absorbent	CCC-G-101
As Required	Bleach, Laundry	O-S-602 NIIN 00-598-7316
As Required	Detergent, General Purpose, Type 1	MIL-D-16791 NIIN 00-282-9699
	-or-	
As Required	Soap, Laundry, Low-filter	P-S-600
As Required	Isopropyl Alcohol	TT-I-735
As Required	SANI-COM 3205	SC3205 (Note 1)
As Required	Cotton Swabs	6003-0019 NIIN 01-362-5829

Notes: 1. Open Purchase from:
Celeste Industries Corp
7978 Industrial Park Rd.
Easton, MD 21601
(410) 822-6200

CAUTION

Do not use methyl ethyl ketone (MEK) on or near mask. The hard shell and/or facepiece material will craze or crack if it comes in contact with MEK.

1. Disassemble oxygen mask:

a. Remove receptacle assembly or AM-7067/A amplifier assembly, microphone bracket, and M-101/AIC microphone in accordance with paragraph 5-81, steps 1 through 3.

b. Remove inhalation/exhalation valve assembly in accordance with paragraph 5-81, step 4.

c. Remove delivery tube in accordance with paragraph 5-82, steps 1 through 9.

d. Remove oxygen mask bag, if installed.

2. Inspect microphone connector for damage, cracks, looseness, and proper seating.

3. Inspect communication cord for cuts and split or abraded insulation.

4. Clean and sanitize the oxygen mask facepiece and housing assembly.

a. (Preferred solution) Make a 1% by weight solution of cleaning compound (Detergent, General Purpose, MIL-D-16791, Type 1) by adding 1/4 to 1/2 ounce (liquid) of the compound to 1 gallon of water.

CAUTION

When the substitute cleaning solution must be used, only the lather from the solution shall be used for cleaning. This prevents undissolved soap solution from getting into the valve.

b. (Alternate solution) Make a suitable soap solution by adding approximately 4 tablespoons of soap powder (P-S-600) to 1 gallon of water. Hardness of water may require more soap, but the solution must be sufficiently strong to readily form lather when agitated. Make sure that all soap particles are dissolved.

CAUTION

Ensure that cleaning solution does not enter inhalation/exhalation valve assembly.

Do not fold nose bridge portion of mask back for cleaning. There are seven ribs which can be easily torn. Damage to the ribs would destroy the structural integrity of the mask. Care shall be taken when cleaning and disinfecting this area.

c. Moisten a gauze pad with cleaning solution. Wash facepiece and housing assembly both internally and externally. Use cotton swabs to clean up under nose bridge portion of mask.

d. After washing, mask should be thoroughly and repeatedly rinsed with warm water.

e. After mask is dry, disinfect with a solution of 1/3 cup of liquid bleach per gallon of water, using gauze pads or other lint-free wipes. Rinse with clean water and allow to air-dry. Ensure disinfectant reaches inner crevices of face form.

5. To clean the delivery hose, proceed as follows:

a. Wash delivery tube with cleaning solution.

b. Rinse with clear water and allow to air-dry.

6. To clean the inhalation/exhalation valve assembly, proceed as follows:

WARNING

Isopropyl alcohol is flammable. Keep away from heat, sparks, and open flames. Use with adequate ventilation. Avoid eye and repeated skin contact. Avoid prolonged breathing of vapors. Keep container closed.

CAUTION

The inhalation/exhalation valve must be removed from mask before cleaning.

a. Obtain a small container large enough to partially submerge the oxygen valve.

NOTE

If a 70% solution of isopropyl alcohol (TT-I-735) is not available, mix 3 parts water and 7 parts isopropyl alcohol.

b. Fill container half full with a 70% solution of isopropyl alcohol (TT-I-735).

CAUTION

Do not submerge the oxygen valve in water. Do not probe any portion of the valve.

c. Hold base portion of valve; submerge in partially filled container, and wash operating portion of valve in alcohol solution. Normally only a few seconds are required to remove stains and residue.

d. Use a cotton swab saturated in isopropyl alcohol to remove stubborn residue. LIGHTLY rub only exhalation plate.

e. Gently shake excess solution from oxygen valve and allow to air-dry completely.

NOTE

Trapped isopropyl alcohol will evaporate in approximately 15 minutes.

7. To clean the microphone, proceed as follows:

a. Wipe microphone with a cotton swab or soft, clean cloth dampened lightly in cleaning solution.

b. Rinse with a second cotton swab dampened lightly in clean, potable cold water. Make sure no lint remains on microphone.

CAUTION

Do not use compressed gas for drying as valves may be damaged.

8. A dry swab can be used to assist in drying washed items. Be careful that lint is not trapped in valves or mask crevices. Air-dry in a ventilated area out of direct sunlight. The mask and delivery hose may be forced-air dried using a stream of clean, dried, oil-free air or nitrogen. Make sure that parts are completely dry before reassembling mask.

NOTE

Examine valves, mask, and hose for undissolved soap powder. Ensure that mask and valves are completely dry and lint-free.

9. If necessary, the oxygen mask storage bag may be machine or hand washed in water up to 140°F. Tumble dry up to 180°F.

10. Reassemble mask and perform functional check.

5-70. SANITIZING NON-PERSONAL ISSUE MASKS. Masks not on a personal-issue basis shall be sanitized after each use as follows:

Materials Required

Quantity	Description	Reference Number
As Required	Bleach, Laundry	O-B-420 NIIN 00-063-2842

1. Make cleaning solution by mixing 1/3 cup of bleach with 1 gallon of water.

2. Moisten a gauze pad with solution and squeeze to prevent dripping. Wipe interior of mask, exclusive of valves and microphone. Ensure that sanitizing solution penetrates all crevices.

3. Wipe valves and microphone with a clean, dry cloth. Ensure that no lint remains in mask, on valves, or on microphone.

5-71. REPAIR.

5-72. Repair of the oxygen mask assembly shall be limited to replacement of defective parts as determined by inspection and troubleshooting. (Refer to table 5-12.) Any holes or tears noted in any part of the facepiece or delivery hose shall be considered basis for rejection of that component.

5-73. REPLACEMENT.

5-74. REPLACEMENT OF OFFSET BAYONETS AND BAYONET RECEIVERS. To replace the bayonets and bayonet receivers, proceed as follows:

Materials Required

Quantity	Description	Reference Number
2	Receivers	93A8514 (CAGE 97427) NIIN 01-389-6117
1	Offset Bayonet (Left)	70280-10 (CAGE 21914) NIIN 00-186-0276
1	Offset Bayonet (Right)	70280-20 (CAGE 21914) NIIN 00-186-0277

1. To replace the offset bayonet, proceed as follows:

a. If present, cut tacking which secures strap to buckle on strap and buckle assembly.

b. Unthread the four straps from the offset bayonets, and remove the bayonets.

c. Thread the four mask straps through the slots on the new bayonet fittings and through the adjustment buckles, leaving a minimum of 1-inch adjustment length in the straps.

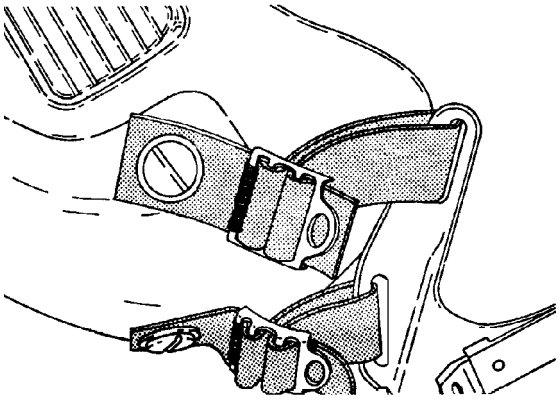

5p74s1c

Step 1c - Para 5-74

NOTE

After replacement of offset bayonets, refer to paragraph 5-42 for fitting procedures.

2. To replace the bayonet receivers, proceed as follows:

a. Remove earcup assemblies from helmet assembly. Peel back pile fastener tape.

b. Remove mounting screws and backup plate securing receiver mechanism to helmet assembly.

c. Attach new receiver assemblies to helmet using screws, lock washers, and backup plates removed in Step b above.

d. Tighten all mounting screws so that the receivers closely fit the contour of the helmet surface.

NOTE

Adhesive is required for pile fastener tape to stick to helmet.

e. Reattach pile fastener tape over backup plates.

f. Refit earcup assemblies (refer to Chapter 4).

5-75. REPLACEMENT OF M-101/AIC MICROPHONE ASSEMBLY. To replace the M-101/AIC microphone assembly, proceed as follows:

Materials Required

Quantity	Description	Reference Number
1	Microphone Assembly	M-101/AIC (CAGE 81349) NIIN 00-843-9957 (See note)
As Required	Screw, Machine 2-56 x 5/16-Inch Long	MS35275-204 (CAGE 96906) NIIN 00-948-4042
As Required	Adhesive Silicone, Type III, RTV 3145, Clear	MIL-A-46146 NIIN 00-117-8510
	-or-	
As Required	Adhesive Silicone, Type III, RTV 3145, Gray	MIL-A-46146 NIIN 00-145-0020

NOTE

Some masks may still be using an M-94B/A microphone which should be replaced with the M-101/AIC.

1. Remove two screws from receptacle assembly or amplifier assembly; remove microphone bracket and microphone assembly.

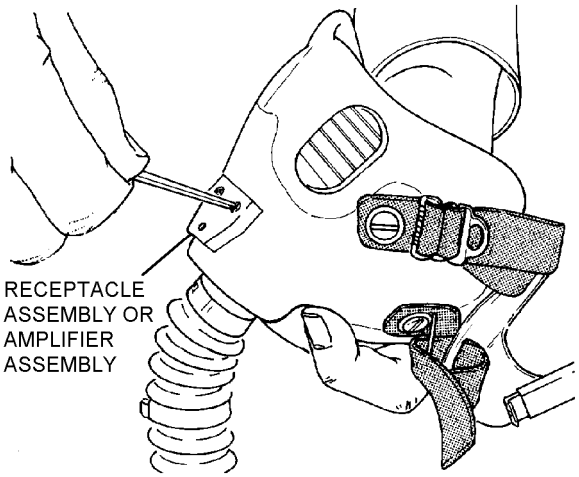

5p75s1

Step 1 - Para 5-75

2. If present, remove sealant from head of two set screws and loosen the two set screws securing microphone assembly to microphone bracket posts, remove two screws securing microphone assembly to microphone bracket.

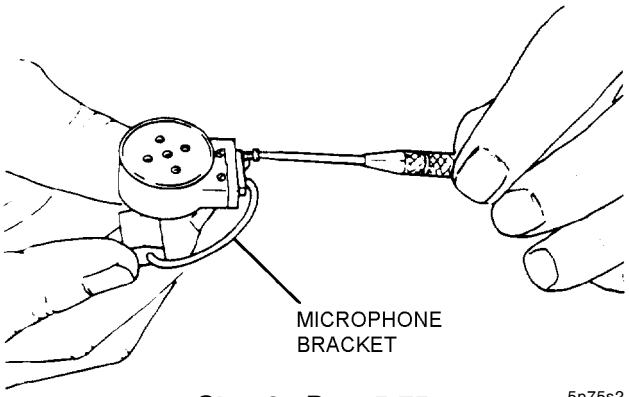

Step 2 - Para 5-75

5p75s2

3. Slide microphone assembly from microphone bracket assembly.

4. Install replacement microphone assembly onto microphone bracket posts and tighten two set screws, secure microphone assembly to microphone bracket with two screws removed in step 2.

NOTE

Ensure that the two microphone set screws, which secure the microphone assembly to the microphone bracket posts, are tight. To preclude possible electric shock to aircrewmember, apply small amount of RTV sealant over heads of set screws. Allow minimum of 12 hours for sealant to cure.

NOTE

Aircrewmembers may experience a slight electrical shock when the face or lips touch the microphone set screws. In these cases, install the microphone backwards such that the set screws face away from the mouth. The microphone should perform satisfactorily when speaking into either side.

5. Install microphone and bracket into mask and onto amplifier or receptacle, as applicable. Ensure proper seating of amplifier or receptacle and good gasket seal. Attach with two screws removed during step 1.

5-76. REPLACEMENT OF AM-7067A/A AMPLIFIER ASSEMBLY. To replace the AM-7067A/A amplifier assembly, proceed as follows:

Materials Required

Quantity	Description	Reference Number
1	Amplifier Assembly, AM-7067A/A	M23595/3-3 (81349) NIIN 01-310-6240 -or- 765AS287-1 (CAGE 30003)
As Required	Screw, 2-56 x 3/4-Inch Long	MS35275-209 NIIN 00-941-3545

1. Remove cable assembly from AM-7067A/A amplifier assembly.

2. Remove two screws from AM-7067A/A amplifier assembly; slide microphone bracket with microphone assembly from amplifier assembly.

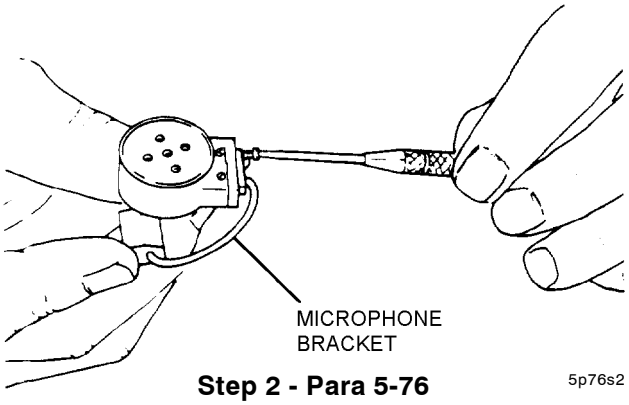

Step 2 - Para 5-76 5p76s2

3. Place amplifier gasket onto new amplifier.

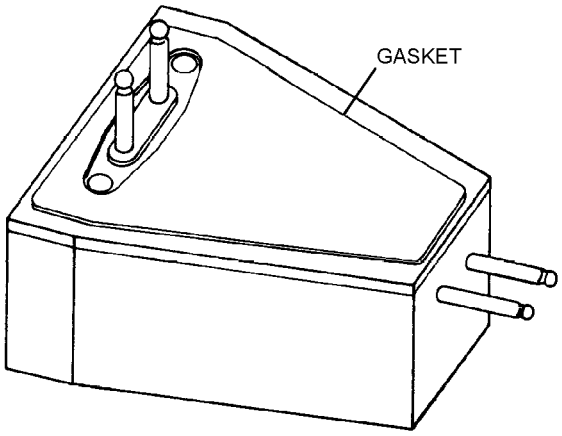

Step 3 - Para 5-76 5p76s3

CAUTION

Ensure that screws are tight enough to form a good seal between amplifier and hardshell, but do not strip screws or crack amplifier.

NOTE

Aircrewmembers may experience a slight electrical shock when the face or lips touch the microphone set screws. In these cases, install the microphone backwards such that the set screws face away from the mouth. The microphone should perform satisfactorily when speaking into either side.

4. Install microphone and bracket into mask and onto amplifier assembly. Ensure proper seating of amplifier and good gasket seal. Attach using screws and washers removed in step 2.

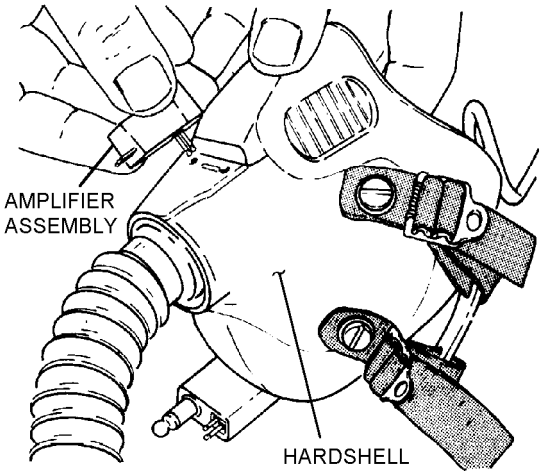

Step 4 - Para 5-76 5p76s4

5. Reinstall cable assembly to amplifier assembly.

5-77. REPLACEMENT OF CX-13154/A AND CX-4434/U CABLE ASSEMBLIES. To replace the CX-13134/A and CX-4434/U cable assemblies, proceed as follows:

Materials Required

Quantity	Description	Reference Number
1	Cable Assembly (CX-13154/A)	P/N 765AS380-1 (CAGE 30003)
1	Cable Assembly, 16-Inch (CX-4434/U)	P/N 57C12661-1-2-1-4 (CAGE 80058) NIIN 00-890-8614
1	Elastrator	P/N 00-6279 (CAGE 53655) NIIN 01-124-0649

CAUTION

Care should be taken not to overexpand cable guides with elastrator. Open only enough to pass cable assembly through opening.

1. Disconnect cable assembly from corresponding receptacle assembly, amplifier assembly, or cable assembly.

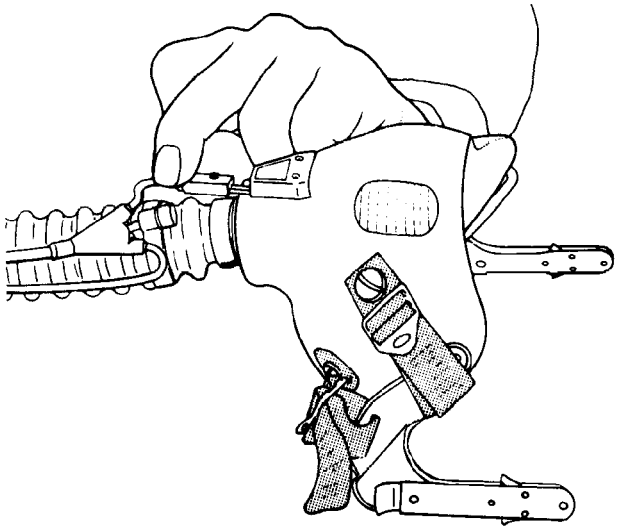

Step 1 - Para 5-77 5p77s1

2. Pass elastrator through opening in upper cable guide, stretch open and remove cable assembly.

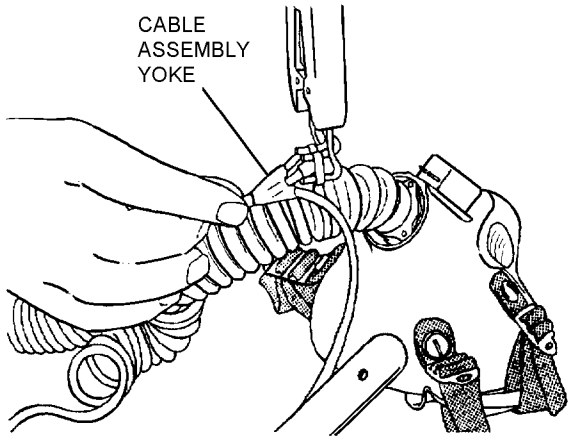

Step 2 - Para 5-77 5p77s2

3. Install upper portion of new cable assembly through opening in cable guide and remove elastrator.

4. Let cable assembly hang loose off delivery tube.

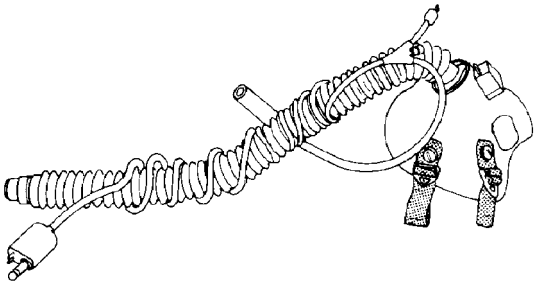

5p77s4

Step 4 - Para 5-77

5. Plug cable assembly into corresponding receptacle assembly, amplifier assembly or cable assembly.

5-78. REPLACEMENT OF CX-13126A/A OR CX-13127/A CABLE ASSEMBLIES. To replace the CX-13126A/A and CX-13127/A cable assemblies, proceed as follows:

NOTE

The CX-13126/A cable was modified by Avionics Change No. 2748. The new cable is designated CX-1326A/A.

Materials Required

Quantity	Description	Reference Number
1	Cable Assembly (CX-13126A/A)	P/N M22442/26-3 NIIN 01-209-3117
1	Cable Assembly (CX-13127/A)	P/N M22442/42-1 NIIN 01-309-4909
1	Elastrator	P/N 00-6279 (CAGE 53655) NIIN 01-124-0649
As Required	Electrical Tape, 3/4-Inch, Black	MIL-I-24391 NIIN 00-419-4291

CAUTION

Care should be taken not to overexpand cable guides with elastrator. Open only enough to pass cable assembly through opening.

1. Disconnect cable assembly from corresponding receptacle assembly, amplifier assembly, or cable assembly.

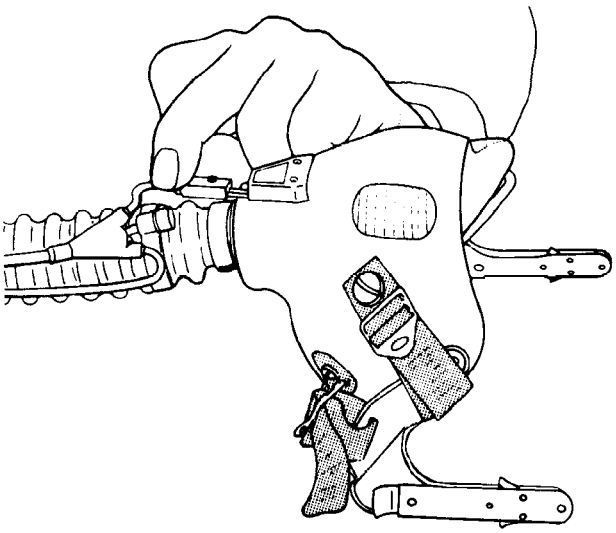

5p78s1

Step 1 - Para 5-78

2. Pass elastrator through opening in upper cable guide, stretch open and remove cable assembly.

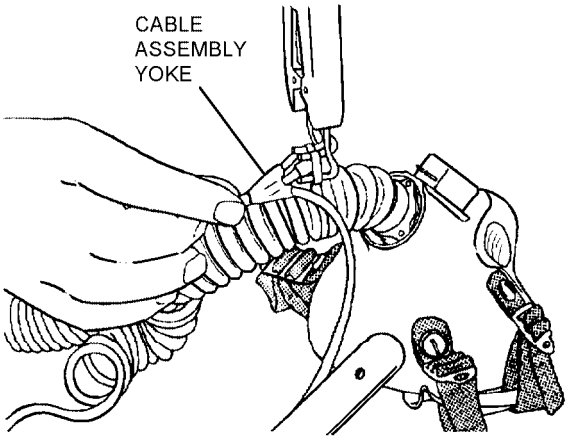

5p78s2

Step 2 - Para 5-78

3. Unwrap old cable assembly from delivery tube. Pass elastrator through opening in lower cable guide; stretch open and remove cable assembly. Insert upper portion of new cable assembly through opening in cable guide and feed cable through guide until approximately 6 inches of cable remains below lower cable guide. Remove elastrator.

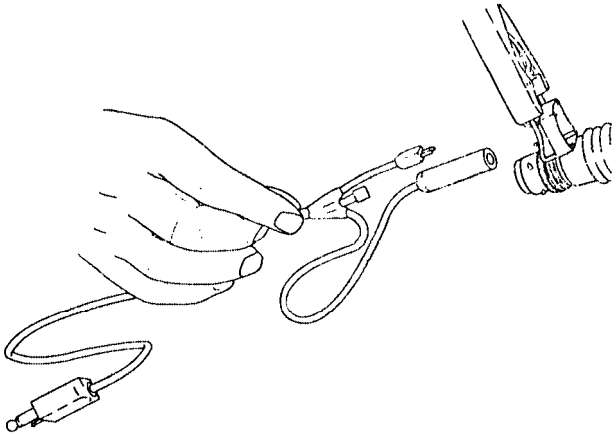

5p78s3

Step 3 - Para 5-78

4. (CX-13127/A only). Prior to installing cable in upper cable guide, secure U-385/U connector by bending back communication cable and fastening with electrical tape to the main cable.

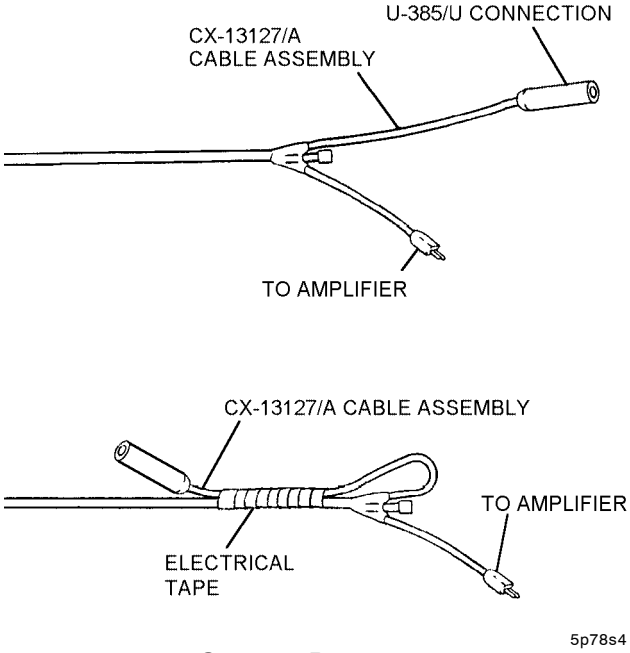

5p78s4

Step 4 - Para 5-78

5. Wrap cable assembly around delivery tube.

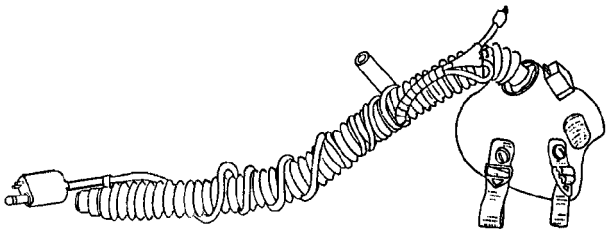

Step 5 - Para 5-78 5p78s5

6. Pass elastrator through opening in upper cable guide and stretch open.

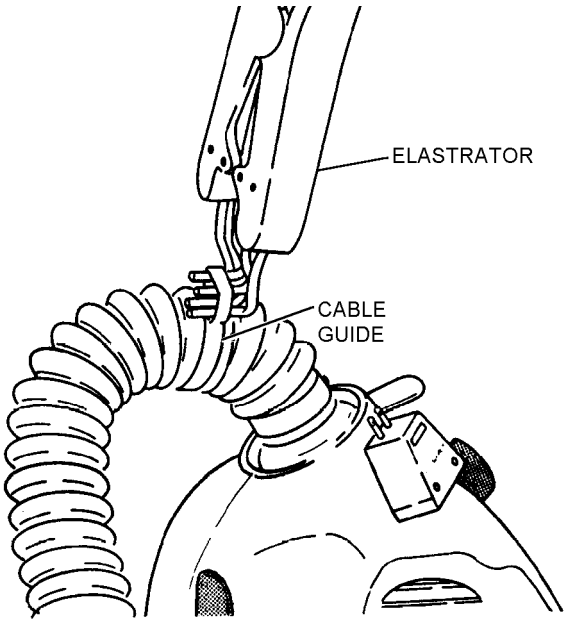

Step 6 - Para 5-78 5p78s6

7. Place nub of yoke from upper portion of cable assembly through opening of upper cable guide and remove elastrator.

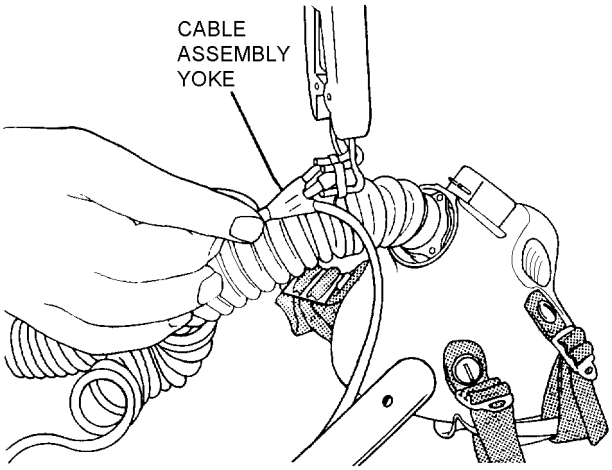

Step 7 - Para 5-78 5p78s7

8. Plug cable assembly into corresponding receptacle assembly, amplifier assembly, or cable assembly.

5-79. REPLACEMENT OF THE MS27796 CONNECTOR. To replace the MS27796 connector, proceed as follows:

Materials Required

Quantity	Description	Reference Number
1	Connector	MS27796 NIIN 00-730-2247
1	Hose Clamp Pliers (See note)	P/N 450-813 (CAGE 53655) NIIN 01-073-4187

NOTE

If installing electrical tiedown strap instead of hose clamp (P/N 450-134A or P/N MS22064-5), pliers are not required.

1. Slide lower cable guide up to expose lower hose clamp.

CAUTION

Carefully avoid puncturing or otherwise damaging delivery tube with hose clamp tool or screwdriver.

NOTE

For ease of removing (or installing) hose clamps, place a small screwdriver under and slightly behind the hook.

2. Remove lower hose clamp, using hose clamp pliers and a small screwdriver. If installed, discard two locking position hose clamps.

WARNING

Do not reuse two locking position hose clamps.

3. Slide MS27796 connector from delivery tube far enough to permit removal of cord and snap assembly.

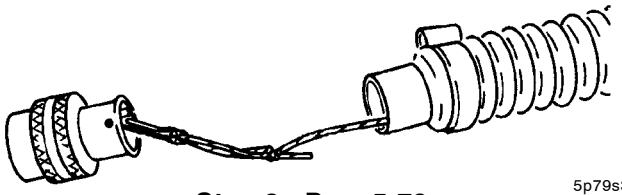

Step 3 - Para 5-79 5p79s3

CAUTION

Care should be taken when removing pin from connector not to damage shell of connector.

4. Remove pin from connector using 3/32-inch drive punch, and remove cord and snap assembly.

CAUTION

Care should be taken to avoid damage to connector shell when inserting pin into connector.

5. Install cord and snap assembly to MS27796 connector; replace pin and slide connector into delivery tube.

CAUTION

Tighten mask hose clamp only enough to retain and seal the delivery tube in the MS27796 connector. An excessively tightened clamp may damage the tube or connector.

NOTE

Electrical tiedown straps may be used in place of hose clamp (P/N 450-134A or P/N MS22064-5), refer to paragraph 5-83 for tiedown strap installation.

6. Using hose clamp pliers, install hose clamp over lower end of delivery tube and tighten.

7. Slide cable guide over lower hose clamp.

5-80. REPLACEMENT OF THE MC-3A OR CRK-90 CONNECTOR. To replace the connector, proceed as follows:

Materials Required

Quantity	Description	Reference Number
1	Connector (Type MC-3A)	MS22016-1 NIIN 00-694-8121
	-or-	
1	Connector (Type CRK-90)	P/N 1888AS100-1
1	Hose Clamp Pliers (See note)	P/N 450-813 (CAGE 53655) NIIN 01-073-4187

NOTE

If installing electrical tiedown strap instead of hose clamp (P/N 450-134A or P/N MS22064-5), pliers are not required.

1. Slide lower cable guide up to expose lower hose clamp.

CAUTION

Carefully avoid puncturing or otherwise damaging delivery tube with hose clamp tool or screwdriver.

NOTE

For ease of removing (or installing) hose clamps, place a small screwdriver under and slightly behind the hook.

2. Remove lower hose clamp, using hose clamp pliers and a small screwdriver. If installed, discard two locking position hose clamps.

WARNING

Do not reuse two locking position hose clamps.

3. Slide connector from delivery tube.

4. Route nylon cord outside delivery tube. Adjust so that there is no more than 1-inch extension in delivery tube when pulled from each end.

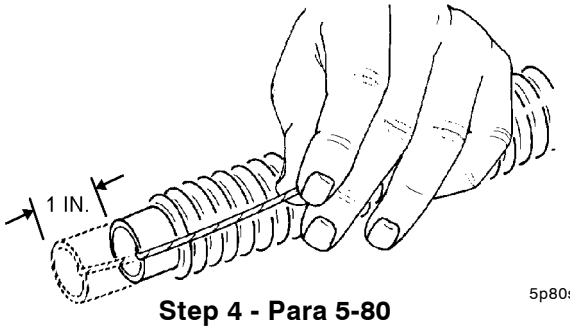

5p80s4

Step 4 - Para 5-80

5. Install new connector into delivery tube.

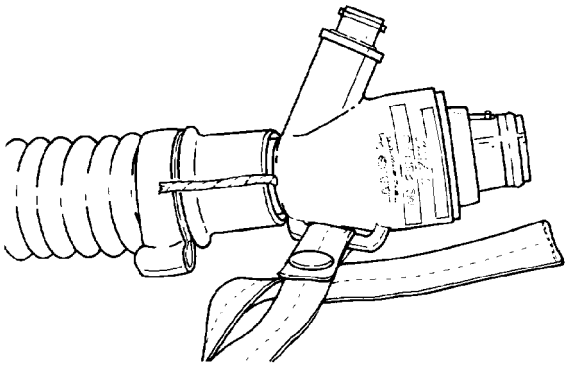

5p80s5

Step 5 - Para 5-80

CAUTION

Tighten mask hose clamp only enough to retain and seal the delivery tube on the connector. An excessively tightened clamp may damage the tube or connector.

NOTE

Electrical tiedown straps may be used in place of mask hose (P/N 450-134A or P/N MS22064-5), refer to paragraph 5-83 for tiedown strap installation.

6. Using hose clamp pliers, install hose clamp over nylon cord and lower end of delivery tube and tighten.

7. Slide cable guide over lower hose clamp.

5-81. REPLACEMENT OF INHALATION/EXHALATION VALVE ASSEMBLY. To replace the inhalation/exhalation valve assembly proceed as follows:

Materials Required

Quantity	Description	Reference Number
1	Inhalation/ Exhalation Valve Assembly	P/N 211-60 (CAGE 15927) NIIN 01-443-8133 -or- P/N G001-5030-01 (CAGE 60240)
1	Valve Wrench (See note)	P/N 211-838-1 (CAGE 53655) NIIN 00-350-8575
1	Hose Clamp Pliers (See note)	P/N 450-813 (CAGE 53655) NIIN 01-073-4187

NOTE

If installing electrical tiedown strap instead of hose clamp (P/N 450-134A or P/N MS22064-5), pliers are not required.

Valve assemblies used in the mask are interchangeable as assemblies only, but parts are not. Intermixing of valve assembly parts increases the chances of inadvertent valve separation from mask. When tightening valve nuts, ensure only MBU-12/P valve wrench is used. Use of other wrenches may cause misalignment of threads and damage to threading.

The receptacle assembly is shown in these procedures for illustration purposes.

1. Disconnect cable assembly from receptacle assembly or AM-7067A/A amplifier assembly.

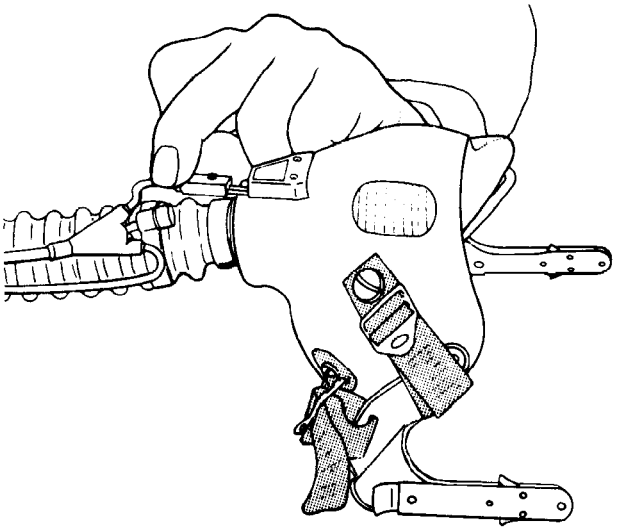

5p81s1

Step 1 - Para 5-81

2. Remove two screws from receptacle assembly or AM-7067A/A amplifier assembly, and remove unit from mask.

3. Remove microphone bracket and M-101/AIC microphone from inside of facepiece.

WARNING

Do not salvage any part from valves which require replacement.

4. Using valve wrench unscrew valve nut from oxygen valve. Remove valve nut, bearing washer, isolation washer, oxygen valve, sealing washer, delivery tube, and connector assembly as a unit from faceform. Discard all used valve parts.

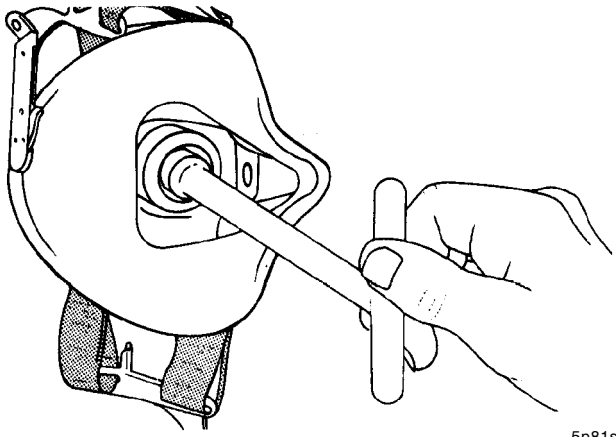

5p81s4

Step 4 - Para 5-81

CAUTION

Carefully avoid puncturing or otherwise damaging delivery tube with hose clamp tool or screwdriver.

NOTE

For ease of removing (or installing) hose clamp, place a small screwdriver under and slightly behind the hook. Do not reuse two-position hose clamps.

5. Remove upper hose clamp using hose clamp pliers and a small screwdriver. If installed, discard two locking position hose clamps. Slide delivery tube from valve. Disconnect nylon cord from valve and discard valve.

WARNING

Do not reuse two locking position hose clamps.

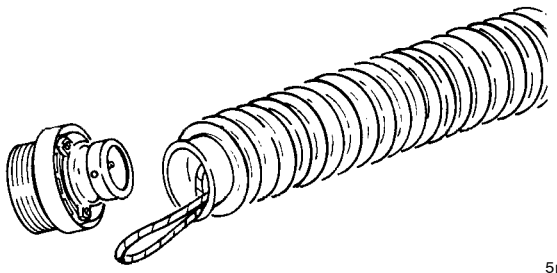

5p81s5

Step 5 - Para 5-81

6. Tie restraint cord and snap assembly to pin in base of new oxygen valve using a lark's head knot.

CAUTION

Tighten mask hose clamp only enough to retain and seal the delivery tube on the valve. An excessively tightened clamp may damage the tube or valve.

7. Slide delivery tube onto stem of new oxygen valve and ensure proper seating of valve stem head with mating tube bead groove.

NOTE

Electrical tiedown straps may be used in place of mask hose clamps (P/N 450-134A or P/N MS22064-5), refer to paragraph 5-83 for tiedown strap installation.

8. Using hose clamp pliers, install hose clamp over valve stem and upper end of tube assembly and tighten.

CAUTION

Ensure removal of old sealing washer from facepiece housing before installation of new oxygen valve assembly.

9. Install new sealing washer, (smaller diameter silicone washer supplied with valve) on upper stem of oxygen valve, and insert upper valve stem into its port in hardshell and facepiece assembly.

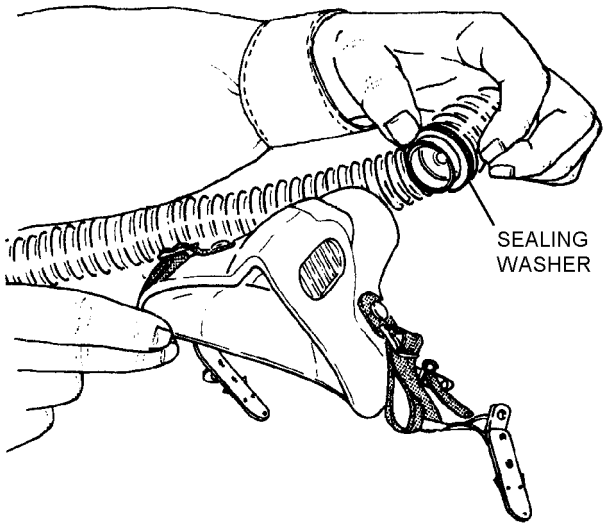

5p81s9

Step 9 - Para 5-81

NOTE

Isolation washer is soft silicone rubber and bearing washer is semi-rigid plastic or aluminum and is black in color.

10. Install isolation washer (figure 5-14) and then bearing washer over upper valve stem end inside facepiece. Align washers on upper surface of hardshell inner port flange.

CAUTION

Ensure proper valve wrench is used to tighten valve nut. Carefully avoid overtightening valve nut. Excessive tightening may misalign, unseat sealing washer, or damage threads on valve nut and valve stem. Valve parts from different vendors are not interchangeable (washer and nuts).

11. Install valve nut on oxygen valve, using valve wrench. Verify that oxygen valve and sealing washer remain centered in facepiece inlet port and that valve nut is not excessively tightened. If, while attempting to tighten

the valve nut, the valve nut loosens, nut has been overtorqued. Valve assembly should then be disposed of since threads on nut and valve stem have been damaged.

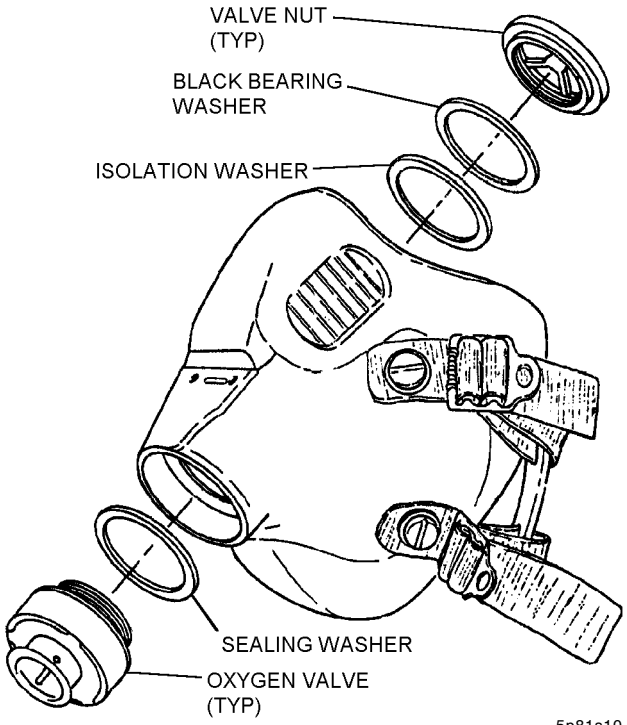

Steps 10 and 11 - Para 5-81

12. Reinstall receptacle assembly or amplifier assembly into hardshell of mask, ensuring proper seating and good gasket seal.

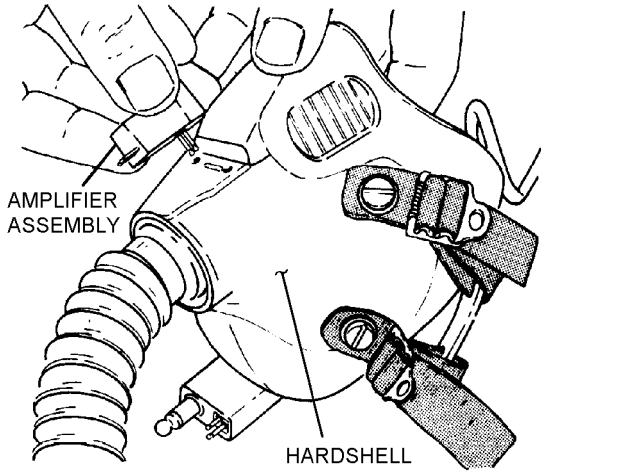

Step 12 - Para 5-81

NOTE

Ensure that screws are tight enough to form a good seal between receptacle assembly or amplifier assembly and hardshell, but do not strip screws.

13. Reinstall microphone assembly and microphone bracket into mask and onto receptacle assembly or amplifier assembly; attach with two screws (no. 2-56 x 3/4 lg).

14. Reconnect cable assembly to receptacle assembly or AM-7067/A amplifier assembly.

5-82. REPLACEMENT OF DELIVERY TUBE. To replace the delivery tube, proceed as follows:

Materials Required

Quantity	Description	Reference Number
1	Delivery Tube	P/N 834-18 (CAGE 92114) -or- P/N G012-1036-01 (CAGE 60240) -or- P/N G002-3640-01 (Note 1)
1	Hose Clamp Pliers (Note 2)	P/N 450-813 (CAGE 53655) NIIN 01-073-4187
1	Elastrator	P/N 00-6297 (CAGE 53655) NIIN 01-124-0649

Notes: 1. Delivery Tube P/N G002-3640-01 is an optional item available for open purchase from:
Gentex Western Operations
11525 6th Street
Rancho Cucamonga, CA 91730
(909) 481-7667.

2. If installing electrical tiedown strap instead of hose clamp (P/N 450-134A or P/N MS22064-5), pliers are not required.

NOTE

The receptacle assembly is shown in these procedures for illustration purposes.

1. Disconnect cable assembly from receptacle assembly or AM-7067/A amplifier assembly.

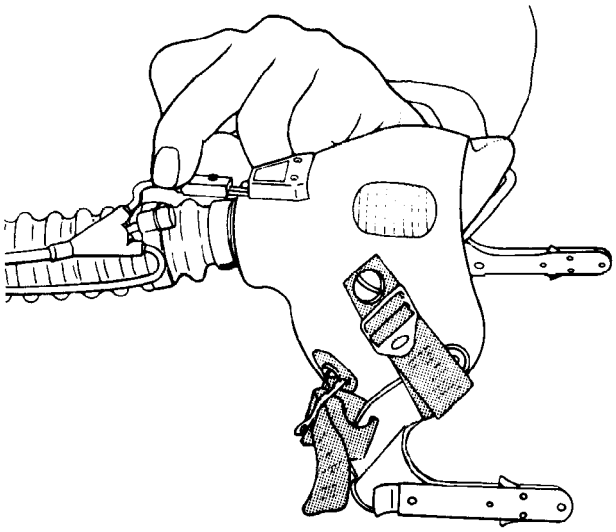

Step 1 - Para 5-82 5p82s1

THIS PAGE INTENTIONALLY LEFT BLANK.

2. Slide lower cable guide up to expose lower hose clamp.

WARNING

Do not reuse two locking position hose clamps.

CAUTION

Carefully avoid puncturing or otherwise damaging delivery tube with hose clamp tool or screwdriver.

NOTE

For ease of removing (or installing) hose clamp, place a small screwdriver under and slightly behind the hook.

3. Remove lower hose clamp, using hose clamp pliers and a small screwdriver. If installed, discard two locking position hose clamps.

4. (MS27796 connector) Slide connector from delivery tube far enough to permit removal of cord and snap assembly.

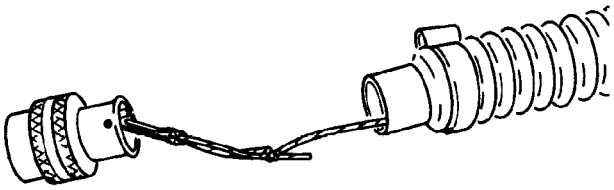

Step 4 - Para 5-82 5p82s4

CAUTION

Care should be taken when removing pin from connector not to damage shell of connector.

5. Remove pin from connector, using 3/32-inch drive punch, and remove cord and snap assembly.

6. (MC-3A connector, CRK-90 connector or miniature regulator) Slide connector with regulator-to-seat kit hose assembly or miniature regulator from delivery tube.

7. Remove upper hose clamp, using hose clamp pliers and a small screwdriver. If installed, discard two locking position hose clamps. Slide delivery tube from valve.

8. Using elastrator, remove cable guides from top and bottom of delivery tube.

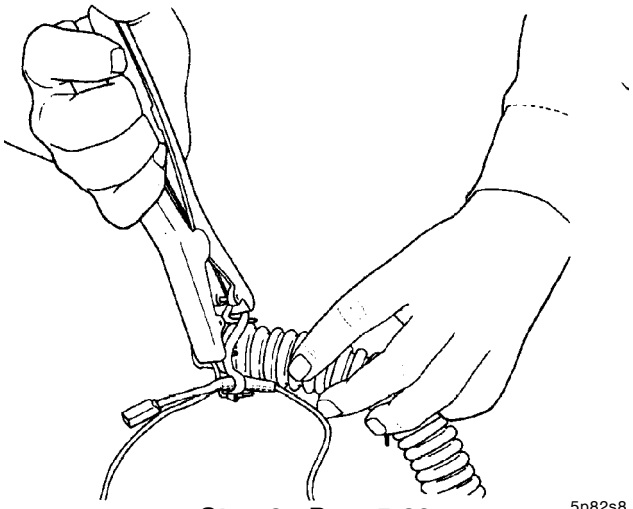

Step 8 - Para 5-82 5p82s8

9. Remove cable assembly from delivery tube.

10. Install cable assembly onto new delivery tube.

11. Using elastrator, install cable guides onto top and bottom of delivery tube.

12. Insert (snap) end of cord and snap assembly through top end of delivery tube.

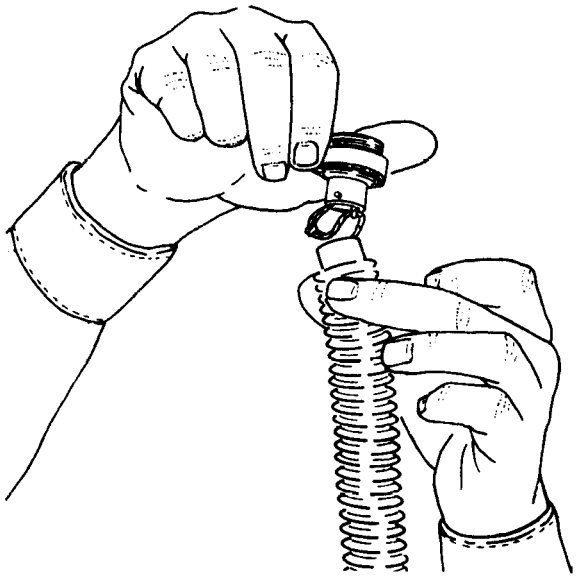

Step 12 - Para 5-82 5p82s12

13. (MS27796 connector) Attach snap end of cord and snap assembly to pin in base of MS27796 connector and replace pin into connector.

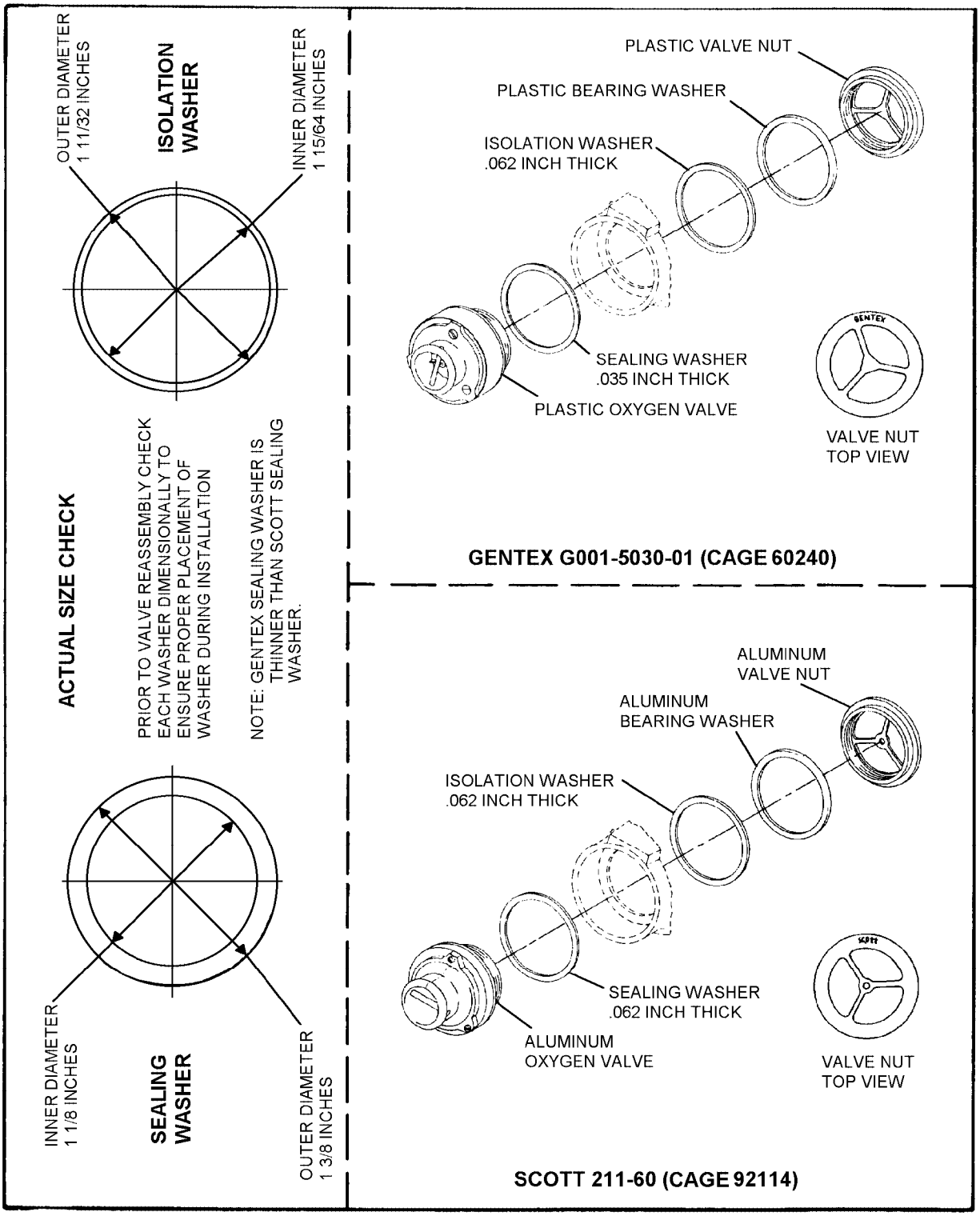

5-14

Figure 5-14. MBU-12/P Pressure Demand Oxygen Mask Assembly

14. (MC-3A connector, CRK-90 connector or miniature regulators) Route nylon cord outside delivery tube. Adjust so that there is no more than 1-inch extension in delivery tube when pulled from each end.

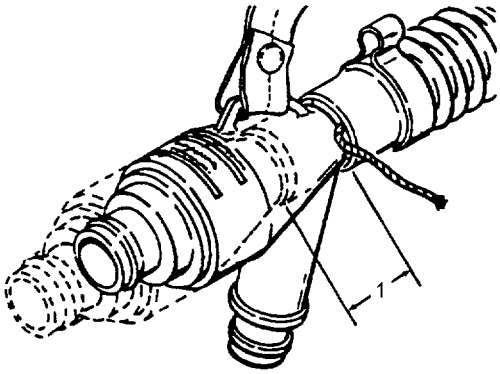

5p82s14

Step 14 - Para 5-82

15. Install connector or miniature regulator and regulator-to-seat kit hose assembly into delivery tube.

WARNING

Do not reuse two locking position hose clamps.

CAUTION

Tighten mask hose clamp only enough to retain and seal the delivery tube in the connector or miniature regulator. An excessively tightened clamp may damage the tube or connector.

NOTE

Electrical tiedown straps may be used in place of mask hose clamps (P/N 450-134A or P/N MS22064-5), refer to paragraph 5-83 for tiedown strap installation.

16. (MS27796 connector) Using hose clamp pliers, install hose clamp over the connector and lower end of delivery tube and tighten.

17. (MC-3A connector, CRK-90 connector or miniature regulator) Using hose clamp pliers, install hose clamp over nylon cord and lower end of delivery tube and tighten.

18. Lower cable guide over lower cable clamp.

19. Slide delivery tube onto stem of oxygen valve and ensure proper seating of valve stem beads with mating tube bead grooves.

20. Using hose clamp pliers, install hose clamp over valve stem and upper end of delivery tube and tighten.

21. Install cable assembly into receptacle assembly or amplifier assembly.

5-83. INSTALLATION OF ELECTRICAL TIEDOWN STRAPS (OPTIONAL). To replace upper or lower hose clamp with electrical tiedown strap, proceed as follows:

Materials Required

Quantity	Description	Reference Number
1	Installation Tool	MS90387-1 (CAGE 28210) NIIN 00-781-7894
As Required	Strap, Tiedown, Electrical	MS3367-1-0 (CAGE 96906) NIIN 00-984-6582

NOTE

Ensure tiedown strap tool has been lubricated with oxygen safe lubricant. List of safe lubricants can be found in NAVAIR 13-1-6.4-2, Chapter 3.

1. Pass tiedown strap around the delivery tube at desired location (upper or lower attachment point), with ribbed portion inboard.

2. Thread tip of tiedown strap, from left to right, through the eye in the strap boss. Cinch strap snugly around the oxygen delivery hose tube, at the combination valve stem or regulator/connector location.

CAUTION

Ensure upper edge of delivery hose tube is flush with the bottom surface of oxygen mask combination valve for proper seating of valve stem lip into the mating groove. (Located on interior of the delivery tube hose).

3. Set tension selector knob for width of the tiedown strap. The correct setting on the P/N MS390387-1 installation tool is standard (STD) for the P/N MS3367-1-0 tiedown strap. The setting is read from the bottom of tension strap knob on the handle of tool.

4. Pass free end of tiedown strap through the slotted end of the installation tool, keeping open side of slot to users left. Push tip of tool snugly against the strap boss.

NOTE

Installation tool must be positioned with open portion of slot facing and flush against the bottom edge of mask hard shell to ensure upper tiedown strap is in the correct position for tightening.

5. With installation tool correctly positioned, pull trigger. The tool will tighten the tiedown and automatically sever excess strap at the preset location.

5-84. FABRICATION AND INSTALLATION OF OXYGEN MASK STORAGE BAG.

5-85. Fabrication. To fabricate oxygen mask storage bag, proceed as follows:

Materials Required

Quantity	Description	Reference Number
12 Inches by 32 Inches	Cloth, Plain and Basket Weave, Aramid Type II, Class I, Sage Green	MIL-C-83429 NIIN 01-147-2064
As Required	Thread, Aramid Spun Staple	MIL-T-83193 NIIN 00-130-6245
	-or-	
As Required	Thread, Nylon, Type II, Size E, Olive Green	V-T-295 NIIN 00-244-0609
7 Inches	Tape, Textile and Webbing, Textile, Reinforcing Nylon, Type III, 3/4-Inch, Olive Green	MIL-T-5038 NIIN 00-176-8083
8 Inches	Fastener Tape, Hook, Type II, Class I, 1-Inch Width, Sage Green	MIL-F-21840 NIIN 00-405-2266

Materials Required (Cont)

Quantity	Description	Reference Number
9 Inches	Fastener Tape, Pile, Class I, 1-Inch Width, Sage Green	MIL-F-21840 NIIN 00-405-2263
1	Fastener, Slide, Interlocking, Type I, Style 3, Size MS	V-F-106 NIIN 00-935-5967
1	Stop, Interlocking Slide Fastener, Closed Bottom Stop, Staple Type	V-F-106 NIIN 00-276-4939
1	Fastener, Snap, Button	MS27980-1B NIIN 00-359-6844
1	Fastener, Snap, Socket	MS27980-6B NIIN 00-285-6250
8 Inches	Cord, Nylon Type I	MIL-C-5040 NIIN 00-262-2148

NOTE

All stitching should be 8 to 10 stitches per inch. Backstitch at least 1/2 inch on all rows of stitching.

1. Using the pattern provided cut four panels and two tabs of aramid cloth. See figure 5-15.

2. Cut one panel in half. Trim ends of slide fastener tape to fit. Remove bottom stop and slider. Install slide fastener as shown.

3. Stitch panel side seams using seam type SSae-2.

4. Cut two 3 1/2-inch pieces of binding tape. Position along top and bottom edges of bag and stitch in place.

5. Cut two 3-inch pieces of pile tape. Stitch one piece to inside of bag along top edge. Stitch second piece to outside of bag along bottom edge.

6. Cut two 4-inch pieces of hook tape. Construct two tabs, using hook tape and tab pieces cut in step 1. Attach tabs to bag.

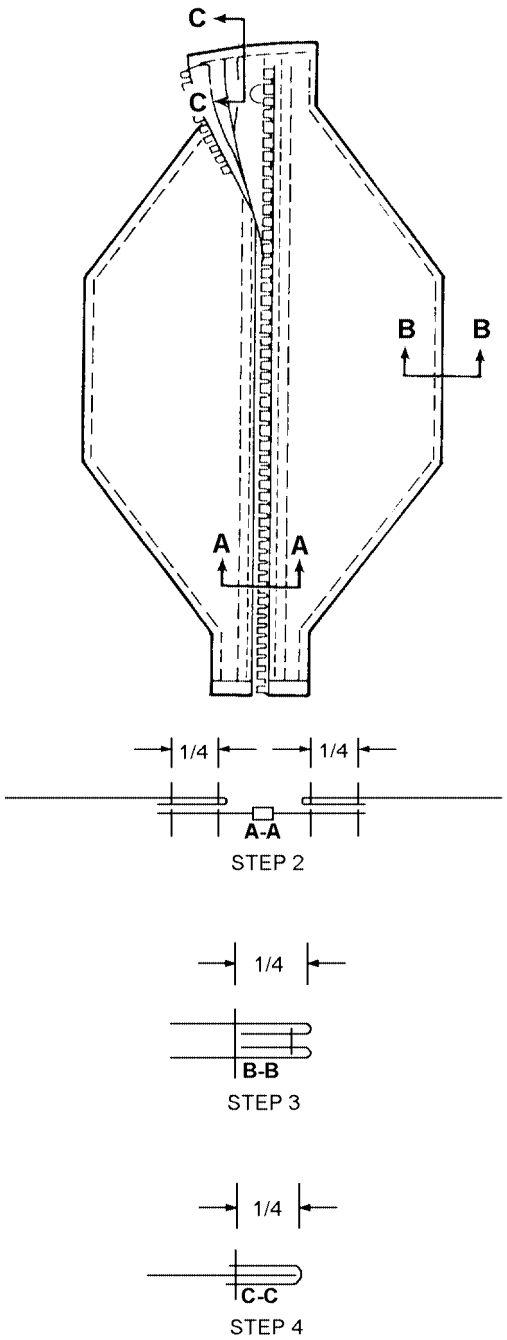

5p85s2

Steps 2 thru 4 - Para 5-85

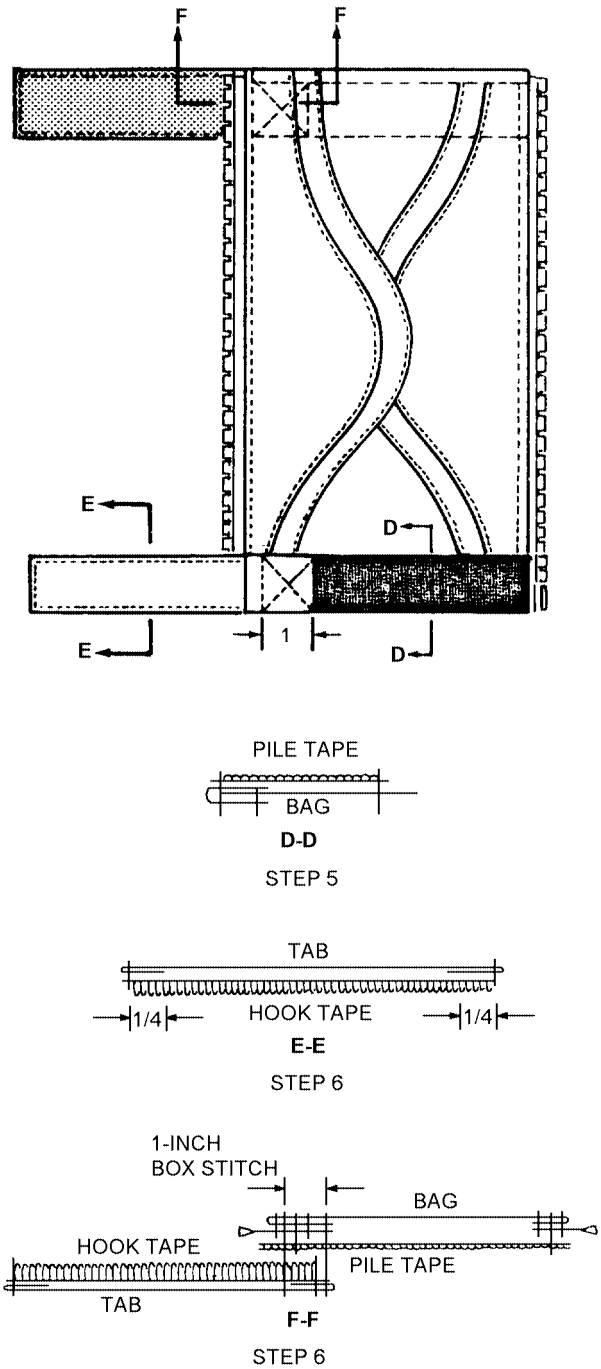

5p85s5

Steps 5 and 6 - Para 5-85

7. Attach snap fastener socket and button to back panel as indicated on pattern.

8. Attach slider and bottom stop.

9. To make thong, attach nylon cord to slider pull.

5-86. Fabrication and Installation of Inner Tab (Optional). To fabricate and install inner tab on oxygen mask bag, proceed as follows:

Materials Required

Quantity	Description	Reference Number
3 Inches by 6 Inches	Cloth, Plain and Basket Weave, Aramid, Type II, Class I, Sage Green	MIL-C-83429 NIIN 01-147-2064
As Required	Thread, Aramid, Spun Staple or Thread Nylon, Type II, Size E, Olive Green	MIL-T-83193 NIIN 00-130-6245 V-T-295 NIIN 00-244-0609
2 Inches	Fastener Tape, Pile, Class I, 1-Inch Width, Sage Green	MIL-F-21840 NIIN 00-405-2263
2 Inches	Fastener Tape, Hook, Type II, Class I, 1-Inch Width, Sage Green	MIL-F-21840 NIIN 00-405-2266

NOTE

All stitching shall be 8 to 10 stitches per inch. Backstitch at least 1/2 inch on all rows of stitching.

1. Using the pattern provided, cut one inner tab of aramid cloth.

2. Fold lengthwise and stitch. Leave one narrow end unstitched.

3. Turn inside-out, tuck-in the remaining open end and top stitch completely around tab, 1/8-inch from edge.

4. Cut one 2-inch piece of hook tape. Stitch to one end of tab.

5. Cut one 2-inch piece of pile tape. Stitch to other side of tab at reverse end.

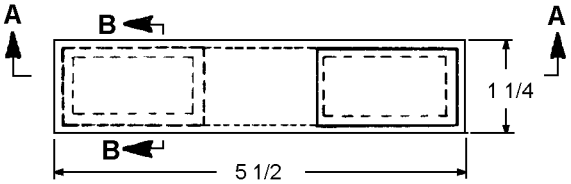

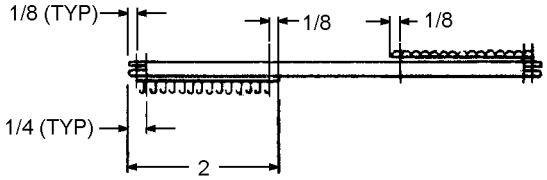

SECTION A-A

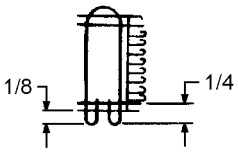

SECTION B-B

5p86s4

Steps 4 and 5 - Para 5-86

NOTE: Procedures for the construction of the pattern.

1. Print out all segments of pattern.
2. Trim all printed segments of pattern at dashed trim line ensuring the alignment marks (crosses) remain on the pattern.
3. Align crosses with adjacent pattern segments and tape in place.
4. After taping, cut out pattern.

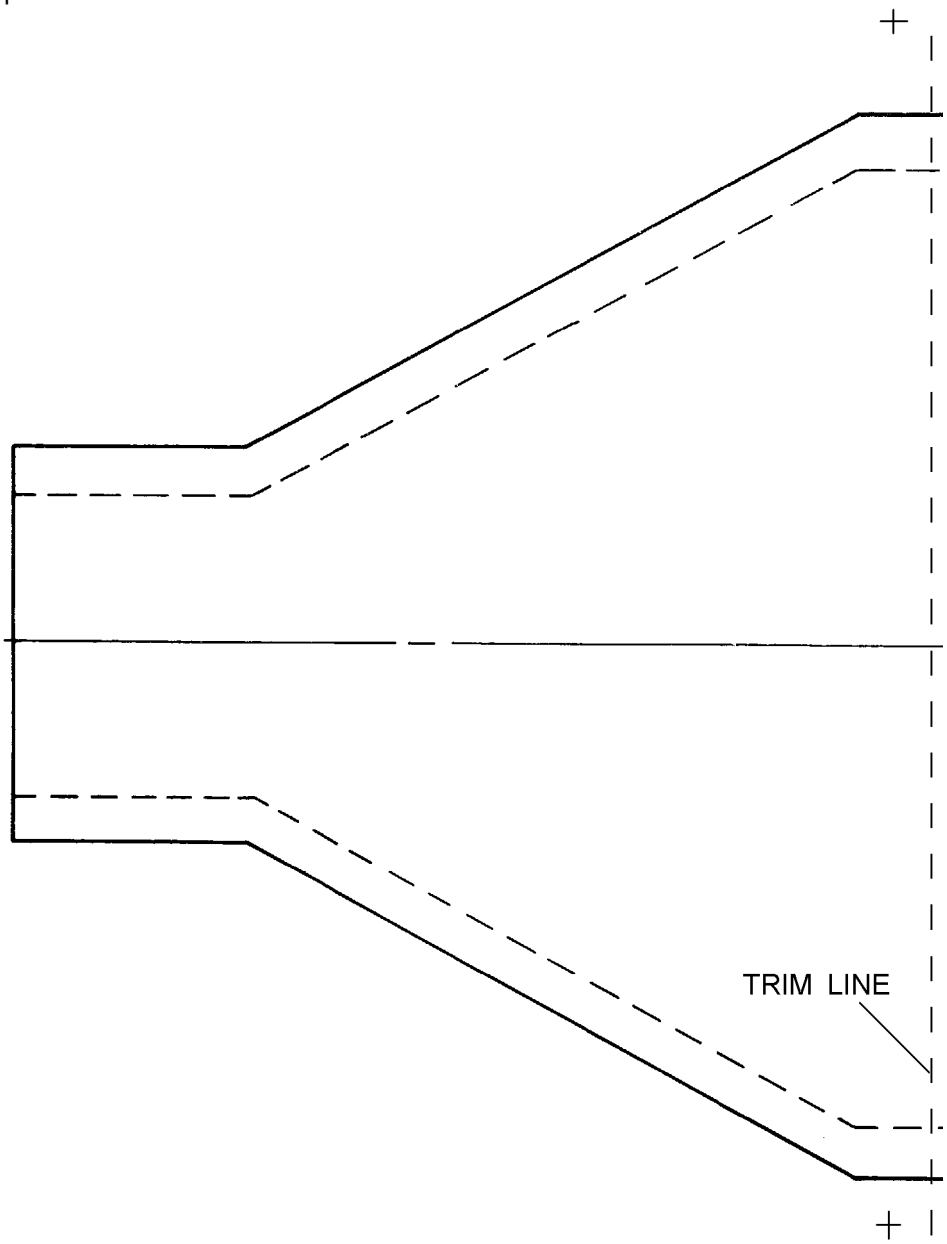

This figure has been divided into multiple segments to facilitate the printing of the pattern.

5-15-a

Figure 5-15. Oxygen Mask Storage Bag Pattern (1 of 3)

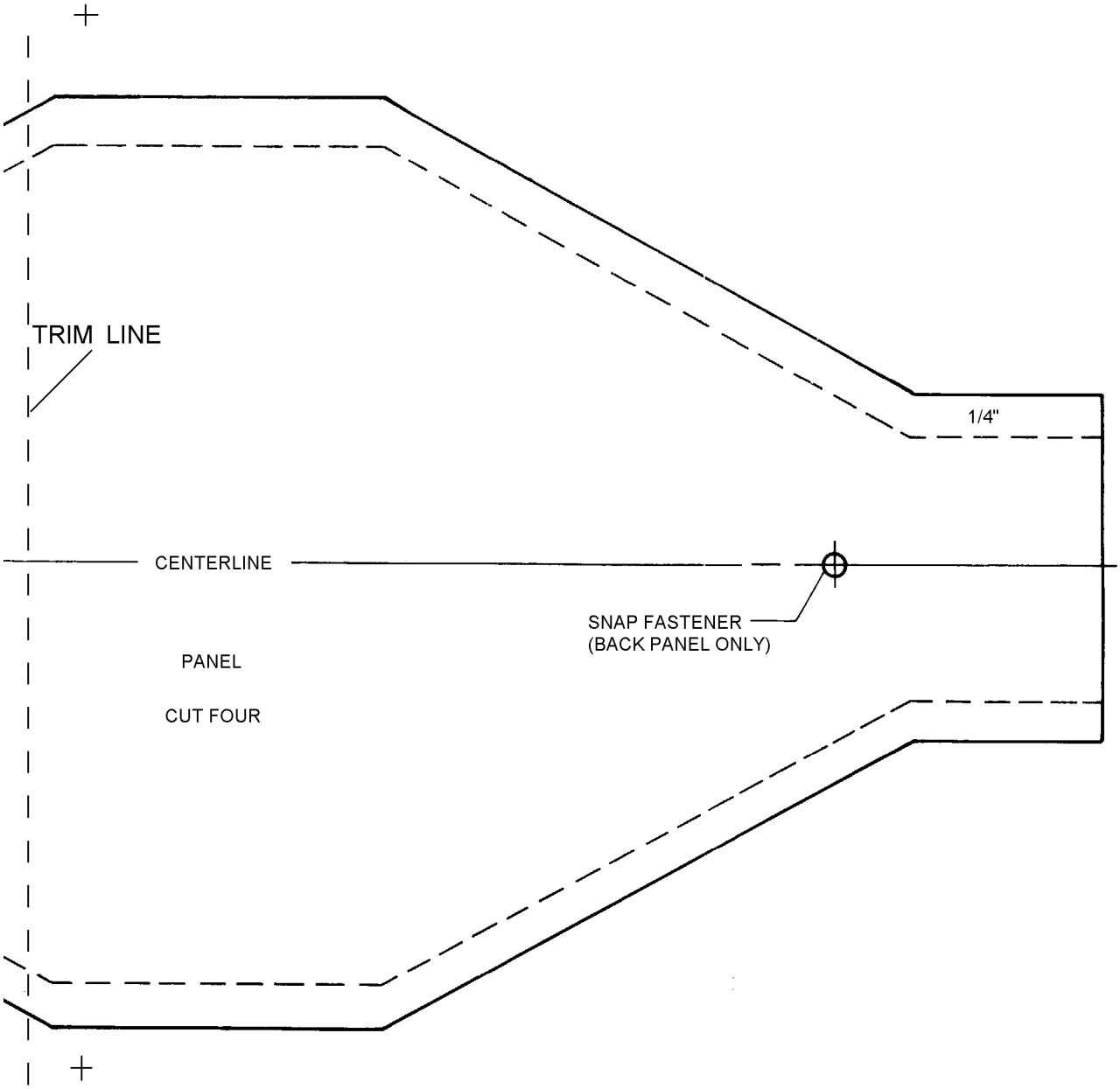

5-15-b

Figure 5-15. Oxygen Mask Storage Bag Pattern (2 of 3)

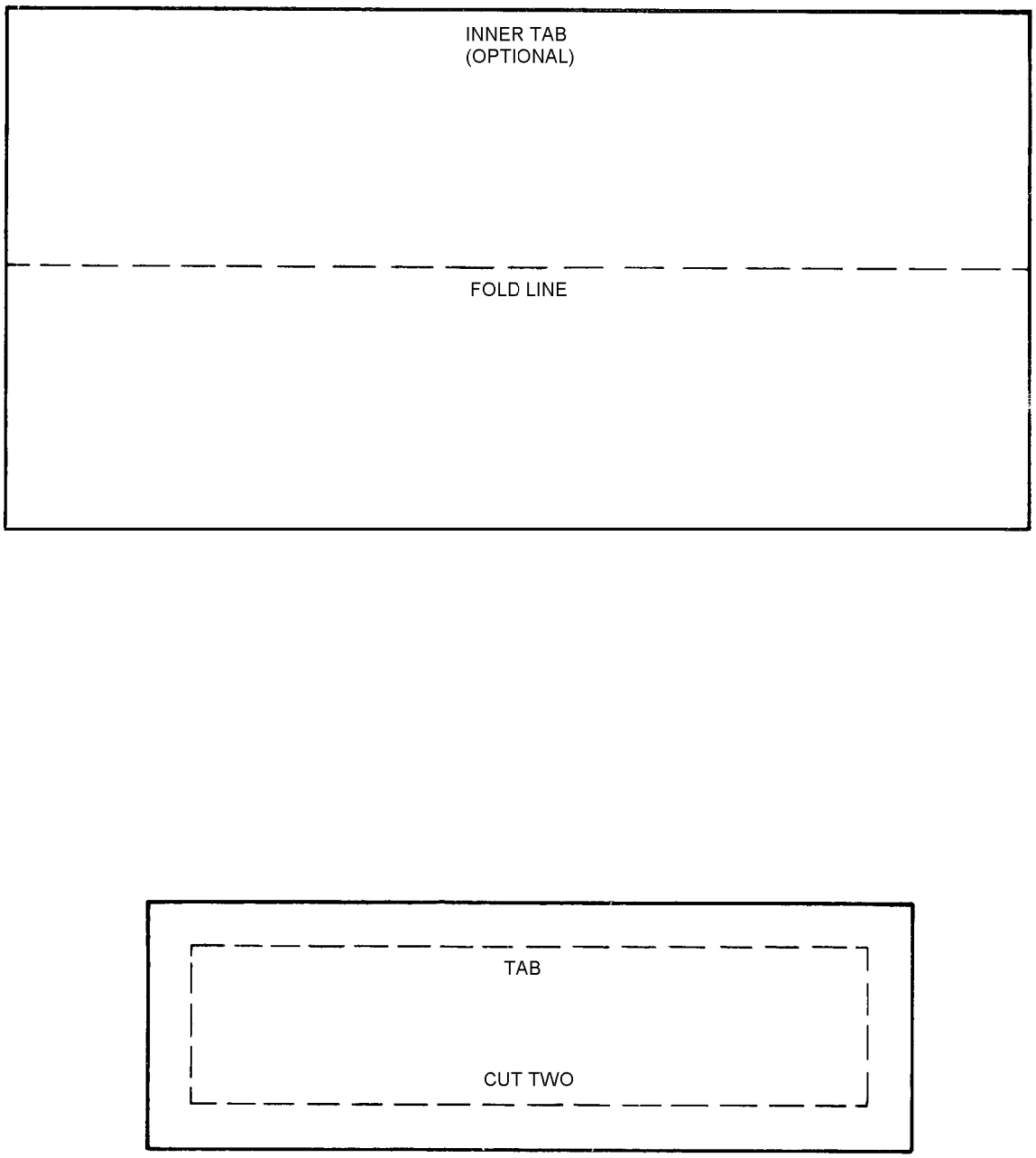

5-15c

Figure 5-15. Oxygen Mask Storage Bag Pattern (3 of 3)

THIS PAGE INTENTIONALLY LEFT BLANK.

6. The finished inner tab is attached to the reverse side of the bag at the mid-section of the slide fastener area using a cross boxstitch.

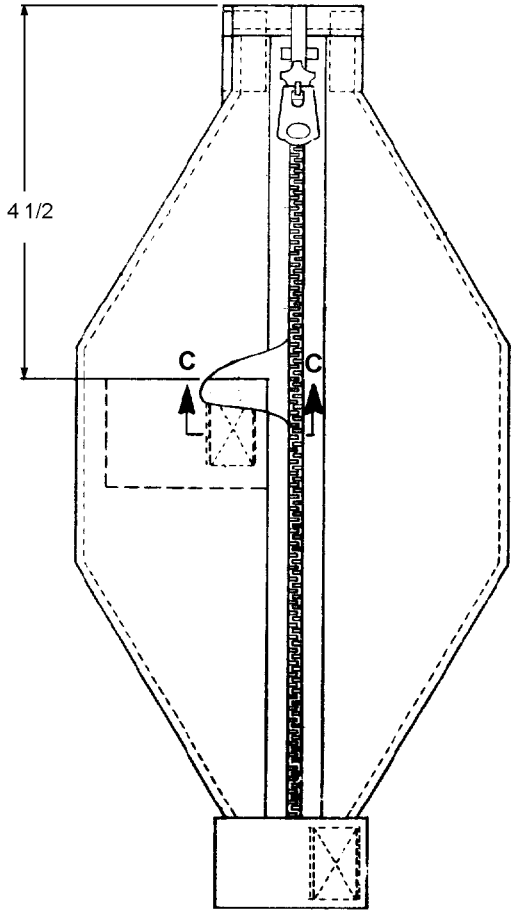

FRONT VIEW

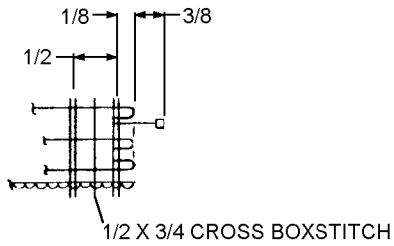

SECTION C-C

Step 6 - Para 5-86 5p86s6

5-87. Installation of Oxygen Mask Storage Bag. To install the oxygen mask storage bag, proceed as follows:

1. Open slide fastener completely.

2. Insert ends of hose and communication cable through bottom opening of bag. Slide bag up to mask.

3. To insert mask into bag, fold bayonet assemblies down (to prevent damage to mask rubber); pull assembly over mask. Close slide fastener. Top fastener may be rolled and tucked into top opening as shown.

4. Tightly close bottom fastener tab so that bag is secured around base. Hand tack tab in place.

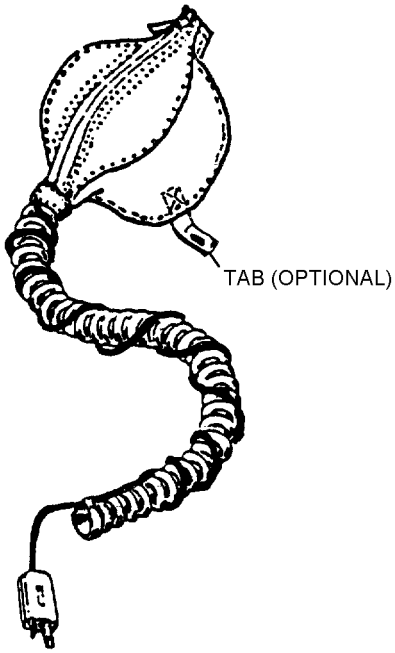

5p87s3

Steps 3 and 4 - Para 5-87

5. Bag and mask can now be snapped on the mating fastener installed on the upper left shoulder of the PCU-series torso harness.

6. To remove oxygen mask from bag for use during flight, proceed as follows:

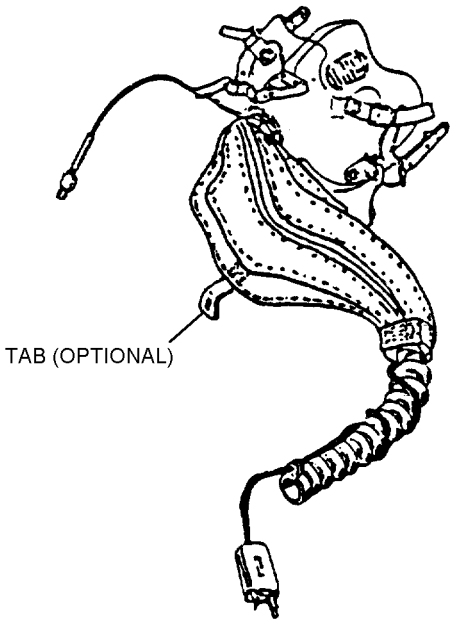

5p87s6

Step 6 - Para 5-87

a. Open slide fastener.

b. Peel assembly back from mask and over oxygen hose. Close slide fastener.

c. Tightly close tab.

d. Bags which feature the optional inner tab should be secured.

Section 5-6. Illustrated Parts Breakdown

5-88. GENERAL.

5-89. This section lists and illustrates the procurable parts of the Pressure Demand Oxygen Masks.

5-90. The IPB is intended for use in the identification, procurement, storing, and issuing of replacement parts. It also illustrates disassembly and assembly relationships. Installation, operation, and maintenance of these oxygen masks shall only be performed by authorized personnel utilizing the instructions set forth in the preceding sections.

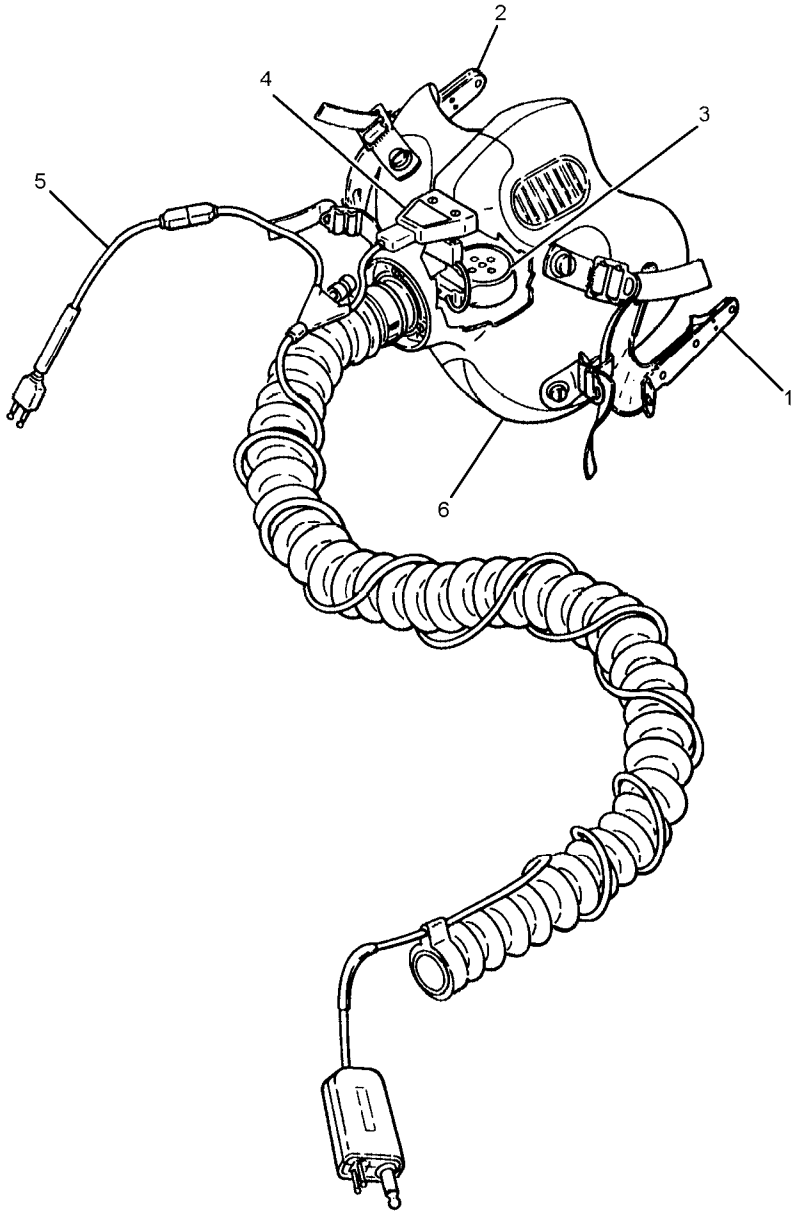

5-16

Figure 5-16. MBU-14(V)1/P Pressure Demand Oxygen Mask Assembly

Figure and Index Number	Part Number	Description 1 2 3 4 5 6 7	Units Per Assembly	Usable On Code
5-16	No Number	MBU-14(V)1/P PRESSURE DEMAND . . . . . . OXYGEN MASK ASSEMBLY, Short	1	A
	No Number	MBU-14(V)1/P PRESSURE DEMAND . . . . . . OXYGEN MASK ASSEMBLY, Regular	1	B
	No Number	MBU-14(V)1/P PRESSURE DEMAND . . . . . . OXYGEN MASK ASSEMBLY, Long	1	C
	No Number	MBU-14(V)1/P PRESSURE DEMAND . . . . . . OXYGEN MASK ASSEMBLY, Extra-Long	1	D
-1	70280-10	. OFFSET BAYONET, Left (CAGE 21914)	1	
-2	70280-20	. OFFSET BAYONET, Right (CAGE 21914)	1	
-3	M-101/AIC	. MICROPHONE ASSEMBLY, (CAGE 81349) . . . . (Note 1)	1	
-4	M23595/3-3 765AS287-1	. AM-7067/A AMPLIFIER ASSEMBLY, ... (CAGE 03487) (CAGE 30003) (Note 2)	1	
-5	M22442/26-3	. CX-13126A/A CABLE ASSEMBLY	1	
-6	834-75-01 G012-1050-01	. MBU-12/P PRESSURE DEMAND . . . . . . OXYGEN MASK SUBASSEMBLY, Short (CAGE 92114) (CAGE 60240) (See figure 5-22 for breakdown)	1	A
	834-75-02 G012-1050-02	. MBU-12/P PRESSURE DEMAND . . . . . . OXYGEN MASK SUBASSEMBLY, Regular (CAGE 92114) (CAGE 60240) (See figure 5-22 for breakdown)	1	B
	834-75-03 G012-1050-03	. MBU-12/P PRESSURE DEMAND . . . . . . OXYGEN MASK SUBASSEMBLY, Long (CAGE 92114) (CAGE 60240) (See figure 5-22 for breakdown)	1	C
	834-75-04 G012-1050-04	. MBU-12/P PRESSURE DEMAND . . . . . . OXYGEN MASK SUBASSEMBLY, Extra-Long (CAGE 92114) (CAGE 60240) (See figure 5-22 for breakdown)	1	D
	Notes: 1. M-101/AIC microphone assembly replaces the M-94B/A microphone by attrition. 2. Amplifier assembly M23595/3-3 or 765AS287-1 replaces receptacle assembly which is part of MBU-12/P oxygen mask assembly.			

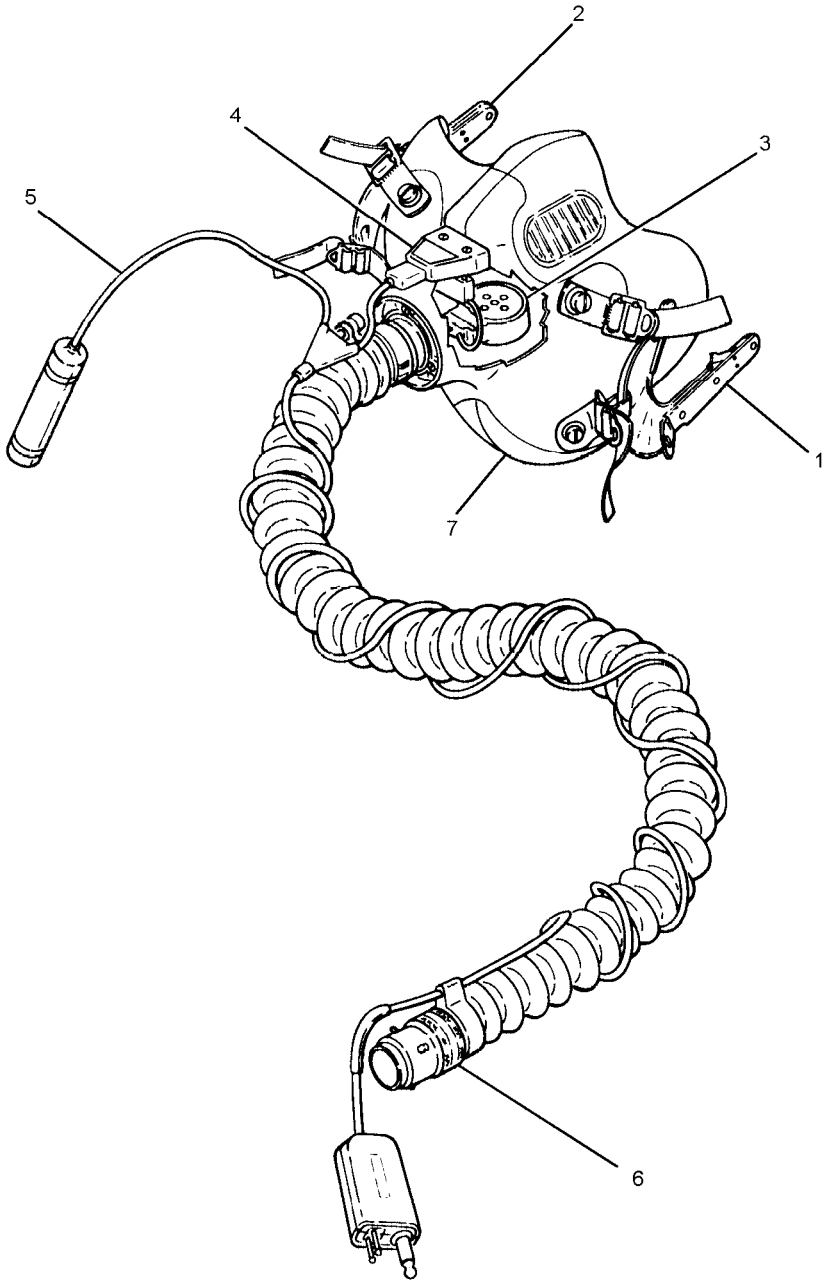

5-17

Figure 5-17. MBU-15/P Pressure Demand Oxygen Mask Assembly

Figure and Index Number	Part Number	Description 1 2 3 4 5 6 7	Units Per Assembly	Usable On Code
5-17	No Number	MBU-15/P PRESSURE DEMAND OXYGEN . . . . . MASK ASSEMBLY, Short	1	A
	No Number	MBU-15/P PRESSURE DEMAND OXYGEN . . . . . MASK ASSEMBLY, Regular	1	B
	No Number	MBU-15/P PRESSURE DEMAND OXYGEN . . . . . MASK ASSEMBLY, Long	1	C
	No Number	MBU-15/P PRESSURE DEMAND OXYGEN . . . . . MASK ASSEMBLY, Extra-Long	1	D
-1	70280-10	. OFFSET BAYONET, Left (CAGE 21914)	1	
-2	70280-20	. OFFSET BAYONET, Right (CAGE 21914)	1	
-3	M-101/AIC	. MICROPHONE ASSEMBLY (CAGE 81349) . . . . . (Note 1)	1	
-4	M23595/3-3 765AS287-1	. AM-7067/A AMPLIFIER ASSEMBLY, ... (CAGE 03487) (CAGE 30003) (Note 2)	1	
-5	M22442/42-1	. CX-13127/A CABLE ASSEMBLY	1	
-6	MS27796	. CONNECTOR, Bayonet	1	
-7	834-75-01 G012-1050-01	. MBU-12/P PRESSURE DEMAND . . . . . OXYGEN MASK SUBASSEMBLY, Short (CAGE 92114) (CAGE 60240) (See figure 5-22 for breakdown)	1	A
	834-75-02 G012-1050-02	. MBU-12/P PRESSURE DEMAND . . . . . OXYGEN MASK SUBASSEMBLY, Regular (CAGE 92114) (CAGE 60240) (See figure 5-22 for breakdown)	1	B
	834-75-03 G012-1050-03	. MBU-12/P PRESSURE DEMAND . . . . . OXYGEN MASK SUBASSEMBLY, Long (CAGE 92114) (CAGE 60240) (See figure 5-22 for breakdown)	1	C
	834-75-04 G012-1050-04	. MBU-12/P PRESSURE DEMAND . . . . . OXYGEN MASK SUBASSEMBLY, Extra-Long (CAGE 92114) (CAGE 60240) (See figure 5-22 for breakdown)	1	D

Notes:
1. M-101/AIC microphone assembly replaces the M-94B/A microphone by attrition.
2. Amplifier assembly M23595/3-3 or 765AS287-1 replaces receptacle assembly which is part of MBU-12/P oxygen mask assembly.

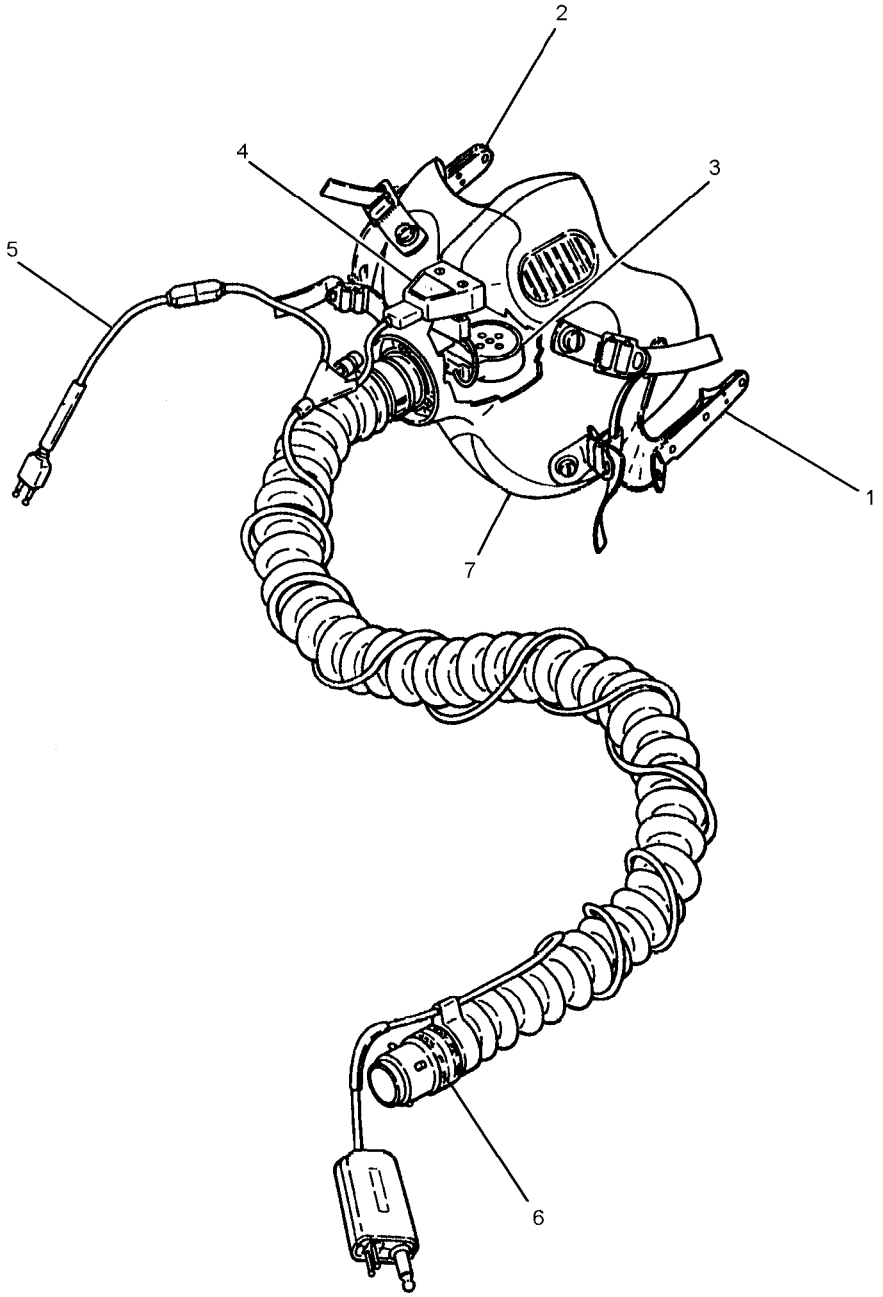

5-18

Figure 5-18. MBU-16/P Pressure Demand Oxygen Mask Assembly

Figure and Index Number	Part Number	Description 1 2 3 4 5 6 7	Units Per Assembly	Usable On Code
5-18	No Number	MBU-16/P PRESSURE DEMAND OXYGEN . . . . . MASK ASSEMBLY, Short	1	A
	No Number	MBU-16/P PRESSURE DEMAND OXYGEN . . . . . MASK ASSEMBLY, Regular	1	B
	No Number	MBU-16/P PRESSURE DEMAND OXYGEN . . . . . MASK ASSEMBLY, Long	1	C
	No Number	MBU-16/P PRESSURE DEMAND OXYGEN . . . . . MASK ASSEMBLY, Extra-Long	1	D
-1	70280-10	. OFFSET BAYONET, Left (CAGE 21914)	1	
-2	70280-20	. OFFSET BAYONET, Right (CAGE 21914)	1	
-3	M-101/AIC	. MICROPHONE ASSEMBLY (CAGE 81349) . . . . . (Note 1)	1	
-4	M23595/3-3 765AS287-1	. AM-7067/A AMPLIFIER ASSEMBLY, ... (CAGE 03487) (CAGE 30003) (Note 2)	1	
-5	M22442/26-3	. CX-13126A/A CABLE ASSEMBLY	1	
-6	MS27796	. CONNECTOR, Bayonet	1	
-7	834-75-01 G012-1050-01	. MBU-12/P PRESSURE DEMAND . . . . . OXYGEN MASK SUBASSEMBLY, Short (CAGE 92114) (CAGE 60240) (See figure 5-22 for breakdown)	1	A
	834-75-02 G012-1050-02	. MBU-12/P PRESSURE DEMAND . . . . . OXYGEN MASK SUBASSEMBLY, Regular (CAGE 92114) (CAGE 60240) (See figure 5-22 for breakdown)	1	B
	834-75-03 G012-1050-03	. MBU-12/P PRESSURE DEMAND . . . . . OXYGEN MASK SUBASSEMBLY, Long (CAGE 92114) (CAGE 60240) (See figure 5-22 for breakdown)	1	C
	834-75-04 G012-1050-04	. MBU-12/P PRESSURE DEMAND . . . . . OXYGEN MASK SUBASSEMBLY, Extra-Long (CAGE 92114) (CAGE 60240) (See figure 5-22 for breakdown)	1	D

Notes:
1. M-101/AIC microphone assembly replaces the M-94B/A microphone by attrition.
2. Amplifier assembly M23595/3-3 or 765AS287-1 replaces receptacle assembly which is part of MBU-12/P oxygen mask assembly.

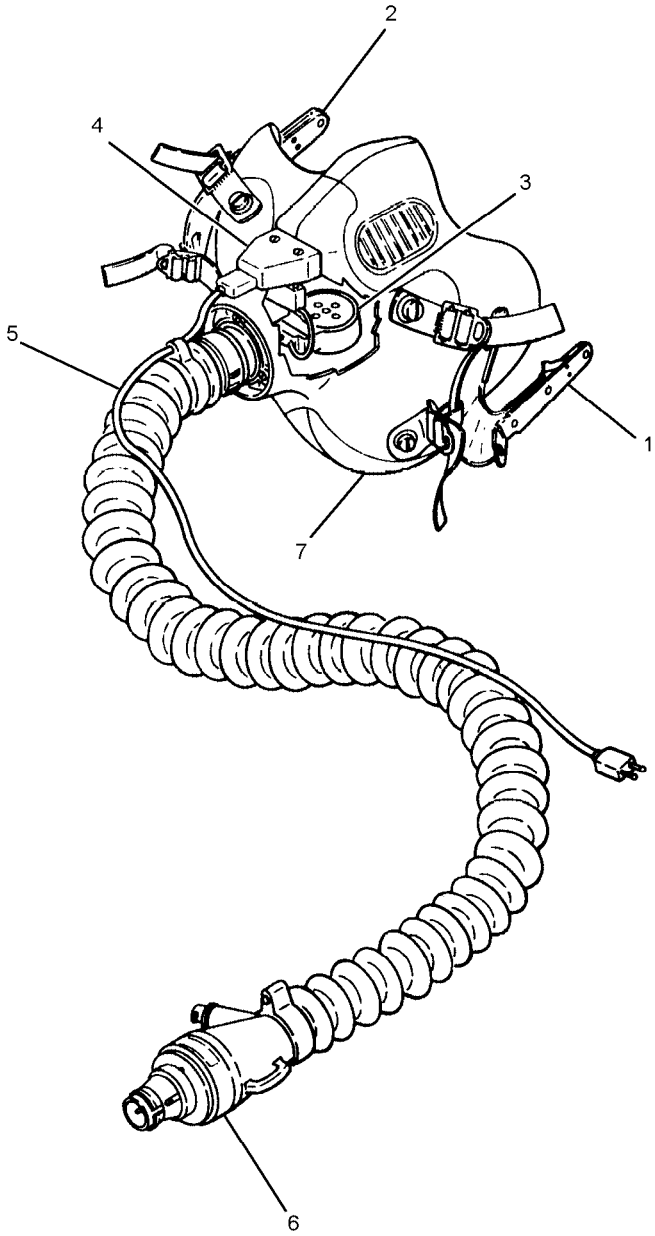

5-19

Figure 5-19. MBU-17(V)1/P Pressure Demand Oxygen Mask Assembly

Figure and Index Number	Part Number	Description 1 2 3 4 5 6 7	Units Per Assembly	Usable On Code
5-19	No Number	MBU-17(V)1/P PRESSURE DEMAND OXYGEN . . . MASK ASSEMBLY, Short	1	A
	No Number	MBU-17(V)1/P PRESSURE DEMAND OXYGEN . . . MASK ASSEMBLY, Regular	1	B
	No Number	MBU-17(V)1/P PRESSURE DEMAND OXYGEN . . . MASK ASSEMBLY, Long	1	C
	No Number	MBU-17(V)1/P PRESSURE DEMAND OXYGEN . . . MASK ASSEMBLY, Extra-Long	1	D
-1	70280-10	. OFFSET BAYONET, Left (CAGE 21914)	1	
-2	70280-20	. OFFSET BAYONET, Right (CAGE 21914)	1	
-3	M-101/AIC	. MICROPHONE ASSEMBLY (CAGE 81349) . . . . . (Note 1)	1	
-4	M23595/3-3 765AS287-1	. AM-7067/A AMPLIFIER ASSEMBLY, ... (CAGE 03487) (CAGE 30003) (Note 2)	1	
-5	765AS380-1	. CX-13154/A CABLE ASSEMBLY	1	
-6	MS22016-1	. MC-3A CONNECTOR (CAGE 92114) . . . . . Sierra P/N 224-01	1	
-7	834-75-01 G012-1050-01	. MBU-12/P PRESSURE DEMAND . . . . . OXYGEN MASK SUBASSEMBLY, Short (CAGE 92114) (CAGE 60240) (See figure 5-22 for breakdown)	1	A
	834-75-02 G012-1050-02	. MBU-12/P PRESSURE DEMAND . . . . . OXYGEN MASK SUBASSEMBLY, Regular (CAGE 92114) (CAGE 60240) (See figure 5-22 for breakdown)	1	B
	834-75-03 G012-1050-03	. MBU-12/P PRESSURE DEMAND . . . . . OXYGEN MASK SUBASSEMBLY, Long (CAGE 92114) (CAGE 60240) (See figure 5-22 for breakdown)	1	C
	834-75-04 G012-1050-04	. MBU-12/P PRESSURE DEMAND . . . . . OXYGEN MASK SUBASSEMBLY, Extra-Long (CAGE 92114) (CAGE 60240) (See figure 5-22 for breakdown)	1	D

Notes:
1. M-101/AIC microphone assembly replaces the M-94B/A microphone by attrition.
2. Amplifier assembly M23595/3-3 or 765AS287-1 replaces receptacle assembly which is part of MBU-12/P oxygen mask assembly.

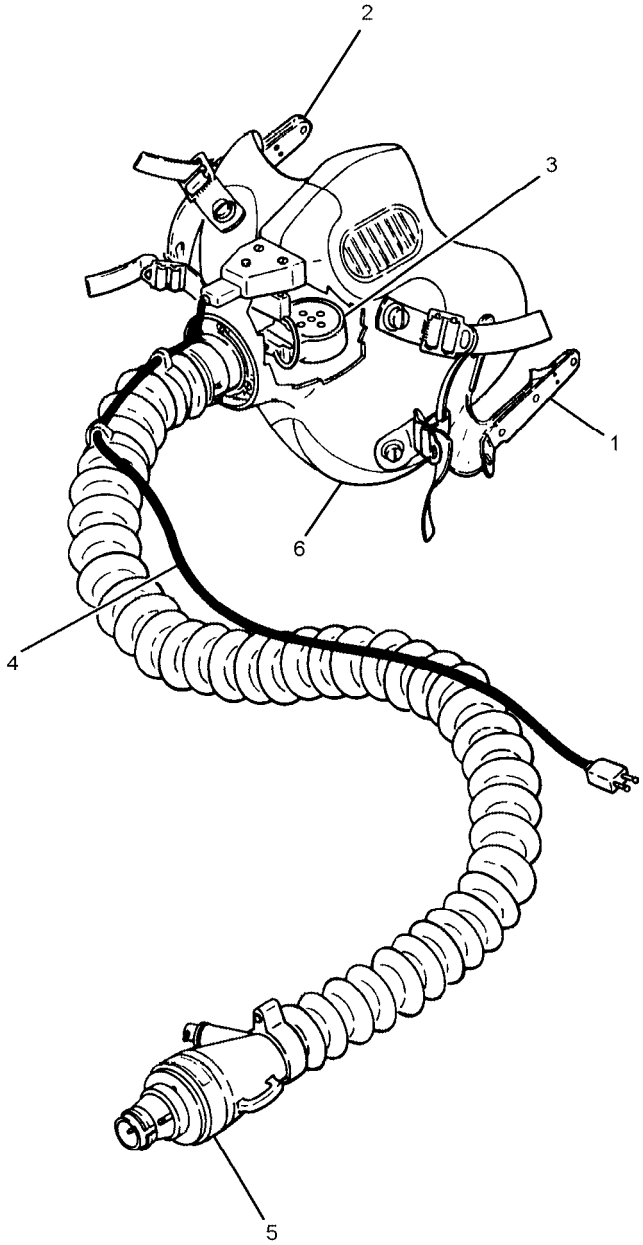

5-20

Figure 5-20. MBU-17(V)2/P Pressure Demand Oxygen Mask Assembly

Figure and Index Number	Part Number	Description 1 2 3 4 5 6 7	Units Per Assembly	Usable On Code
5-20	No Number	MBU-17(V)2/P PRESSURE DEMAND	1	A
	No Number	MBU-17(V)2/P PRESSURE DEMAND OXYGEN . . . MASK ASSEMBLY, Regular	1	B
	No Number	MBU-17(V)2/P PRESSURE DEMAND OXYGEN . . . MASK ASSEMBLY, Long	1	C
	No Number	MBU-17(V)2/P PRESSURE DEMAND OXYGEN . . . MASK ASSEMBLY, Extra-Long	1	D
-1	70280-10	. OFFSET BAYONET, Left (CAGE 21914)	1	
-2	70280-20	. OFFSET BAYONET, Right (CAGE 21914)	1	
-3	M-101/AIC	. MICROPHONE ASSEMBLY (CAGE 81349) . . . . . (Note 1)	1	
-4	57C12661-1	. CX-4434/U, 16-Inch cable assembly	1	
-5	MS22016-1	. MC-3A CONNECTOR (CAGE 92114) . . . . . (Sierra P/N 224-01)	1	
-6	834-75-01 G012-1050-01	. MBU-12/P PRESSURE DEMAND . . . . . OXYGEN MASK SUBASSEMBLY, Short (CAGE 92114) (CAGE 60240) (See figure 5-22 for breakdown)	1	A
	834-75-02 G012-1050-02	. MBU-12/P PRESSURE DEMAND . . . . . OXYGEN MASK SUBASSEMBLY, Regular (CAGE 92114) (CAGE 60240) (See figure 5-22 for breakdown)	1	B
	834-75-03 G012-1050-03	. MBU-12/P PRESSURE DEMAND . . . . . OXYGEN MASK SUBASSEMBLY, Long (CAGE 92114) (CAGE 60240) (See figure 5-22 for breakdown)	1	C
	834-75-04 G012-1050-04	. MBU-12/P PRESSURE DEMAND . . . . . OXYGEN MASK SUBASSEMBLY, Extra-Long (CAGE 92114) (CAGE 60240) (See figure 5-22 for breakdown)	1	D
	Notes: 1. M-101/AIC microphone assembly replaces the M-94B/A microphone by attrition.			

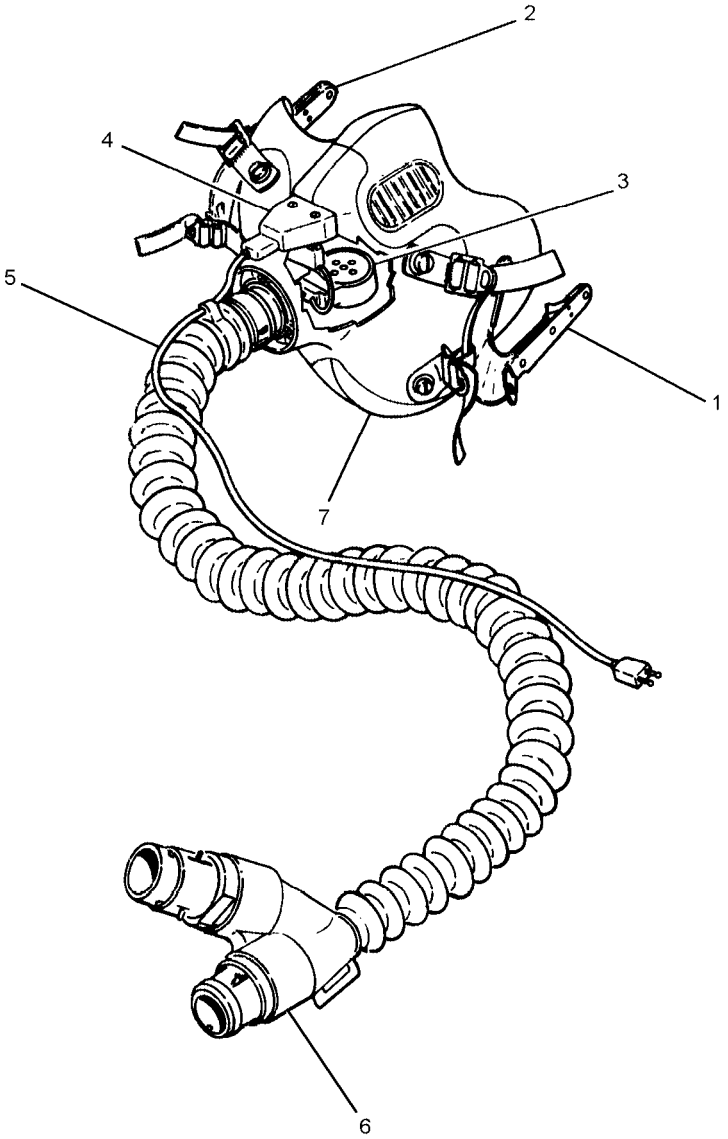

5-21

Figure 5-21. MBU-17(V)5/P Pressure Demand Oxygen Mask Assembly

Figure and Index Number	Part Number	Description 1 2 3 4 5 6 7	Units Per Assembly	Usable On Code
5-21	No Number	MBU-17(V)5/P PRESSURE DEMAND OXYGEN . . . MASK ASSEMBLY, Short	1	A
	No Number	MBU-17(V)5/P PRESSURE DEMAND OXYGEN . . . MASK ASSEMBLY, Regular	1	B
	No Number	MBU-17(V)5/P PRESSURE DEMAND OXYGEN . . . MASK ASSEMBLY, Long	1	C
	No Number	MBU-17(V)5/P PRESSURE DEMAND OXYGEN . . . MASK ASSEMBLY, Extra-Long	1	D
-1	70280-10	. OFFSET BAYONET, Left (CAGE 21914)	1	
-2	70280-20	. OFFSET BAYONET, Right (CAGE 21914)	1	
-3	M-101/AIC	. MICROPHONE ASSEMBLY (CAGE 81349) . . . . . (Note 1)	1	
-4	M23595/3-3 765AS287-1	. AM-7067/A AMPLIFIER ASSEMBLY, ... (CAGE 03487) (CAGE 30003) (Note 2)	1	
-5	765AS380-1	. CX-13154/A CABLE ASSEMBLY	1	
-6	123AB50534-5	. CRK-90 CONNECTOR (CAGE 30003)	1	
-7	834-75-01 G012-1050-01	. MBU-12/P PRESSURE DEMAND . . . . . OXYGEN MASK SUBASSEMBLY, Short (CAGE 92114) (CAGE 60240) (See figure 5-22 for breakdown)	1	A
	834-75-02 G012-1050-02	. MBU-12/P PRESSURE DEMAND . . . . . OXYGEN MASK SUBASSEMBLY, Regular CAGE 92114) (CAGE 60240) (See figure 5-22 for breakdown)	1	B
	834-75-03 G012-1050-03	. MBU-12/P PRESSURE DEMAND . . . . . OXYGEN MASK SUBASSEMBLY, Long (CAGE 92114) (CAGE 60240) (See figure 5-22 for breakdown)	1	C
	834-75-04 G012-1050-04	. MBU-12/P PRESSURE DEMAND . . . . . OXYGEN MASK SUBASSEMBLY, Extra-Long (CAGE 92114) (CAGE 60240) (See figure 5-22 for breakdown)	1	D

Notes:
1. M-101/AIC microphone assembly replaces the M-94B/A microphone by attrition.
2. Amplifier assembly M23595/3-3 or 765AS287-1 replaces receptacle assembly which is part of MBU-12/P oxygen mask assembly.

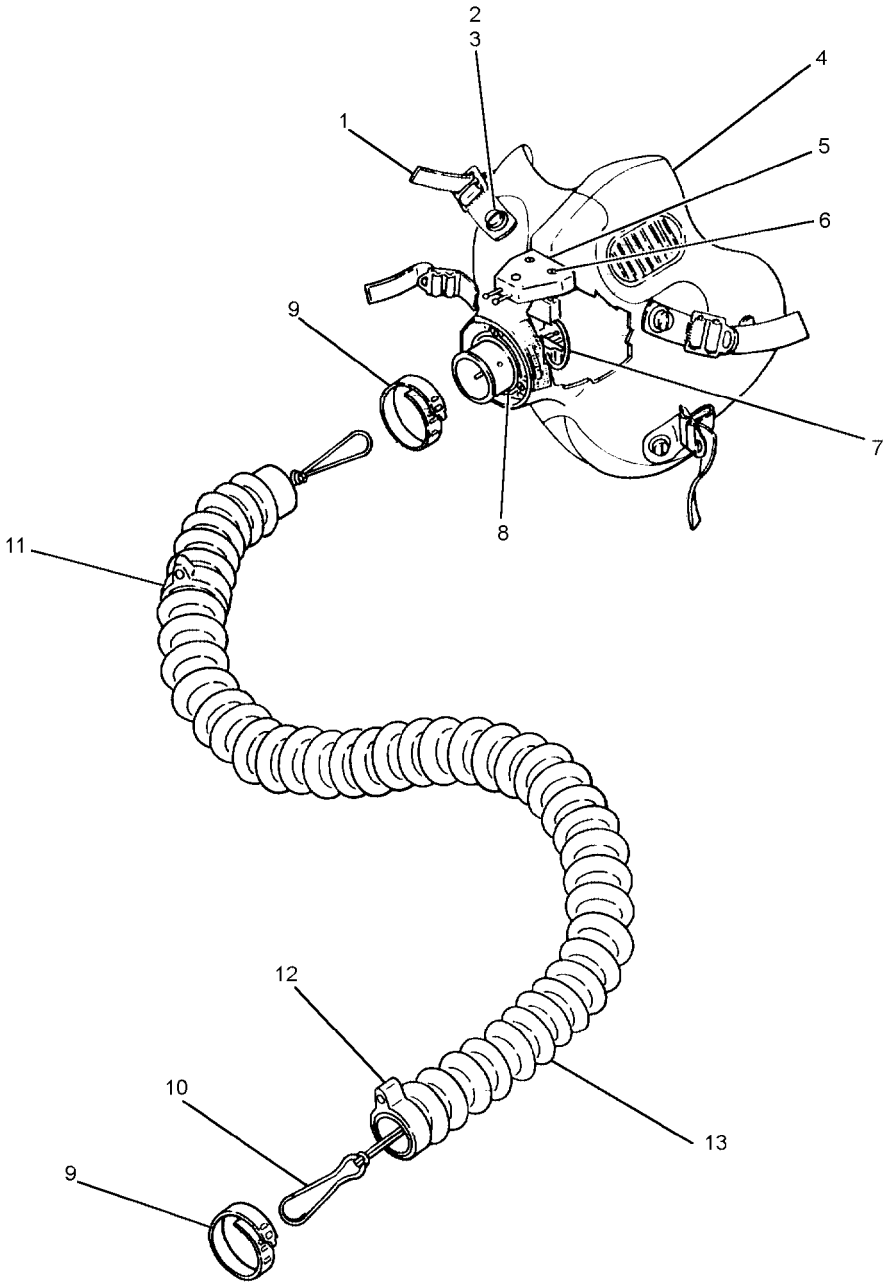

5-22

Figure 5-22. MBU-12/P Pressure Demand Oxygen Mask Assembly

Figure and Index Number	Part Number	Description 1 2 3 4 5 6 7	Units Per Assembly	Usable On Code
5-22	834-75-1 G012-1050-01	. MBU-12/P PRESSURE DEMAND . . . . . . OXYGEN MASK SUBASSEMBLY, Short (CAGE 92114) (CAGE 60240) (See figures 5-17 thru 5-22 for NHA)	REF	A
	834-75-2 G012-1050-02	. MBU-12/P PRESSURE DEMAND . . . . . . OXYGEN MASK SUBASSEMBLY, Regular (CAGE 92114) (CAGE 60240) (See figures 5-17 thru 5-22 for NHA)	REF	B
	834-75-3 G012-1050-03	. MBU-12/P PRESSURE DEMAND . . . . . . OXYGEN MASK SUBASSEMBLY, Long (CAGE 92114) (CAGE 60240) (See figures 5-17 thru 5-22 for NHA)	REF	C
	834-75-4 G012-1050-04	. MBU-12/P PRESSURE DEMAND . . . . . . OXYGEN MASK SUBASSEMBLY, Extra-Long (CAGE 92114) (CAGE 60240) (See figures 5-17 thru 5-22 for NHA)	REF	D
-1	834-11	. . STRAP AND BUCKLE ASSEMBLY . . . . . . (ATTACHING PARTS)	4	
-2	AB2662V3N	. . SCREW, Self-locking (8-32 UNC-3A)	1	
-3	834-12	. . TEE NUT, Capped . . . . . . ---*---	1	
-4	834-25-1 G012-1028-01	. . HARDSHELL AND FACEPIECE . . . . . . ASSEMBLY, Short (CAGE 92114) (CAGE 60240)	1	A
	834-25-2 G012-1028-02	. . HARDSHELL AND FACEPIECE . . . . . . ASSEMBLY, Regular (CAGE 92114) (CAGE 60240)	1	B
	834-25-3 G012-1028-03	. . HARDSHELL AND FACEPIECE . . . . . . ASSEMBLY, Long (CAGE 92114) (CAGE 60240)	1	C
	834-25-4 G012-1028-04	. . HARDSHELL AND FACEPIECE . . . . . . ASSEMBLY, Extra-Long (CAGE 92114) (CAGE 60240)	1	D
-5	834-37	. RECEPTACLE ASSEMBLY . . . . . . (ATTACHING PARTS)	1	
-6	00-5377	. SCREW . . . . . . ---*---	2	
-7	00-6268	. MICROPHONE BRACKET	1	
-8	211-60 G001-5030-01	. VALVE ASSEMBLY, Inhalation/exhalation . . . . . . (CAGE 92114) (CAGE 60240)	1	
-9	450-134A G012-1033-01 MS22064-5 MS3367-1-0	. CLAMP, Mask hose, Two-position (Note 1)	2	
-10	339-06-1 G012-1046-01	. CORD AND SNAP ASSEMBLY . . . . . . (CAGE 92114) (CAGE 60240)	1	
-11	249-425 G012-1034-01	. GUIDE, Cable, Upper (CAGE 92114) . . . . . . (CAGE 60240)	1	
-12	450-13 G012-1035-01	. GUIDE, Cable, Lower (CAGE 92114) . . . . . . (CAGE 60240)	1	

Figure and Index Number	Part Number	Description 1 2 3 4 5 6 7	Units Per Assembly	Usable On Code
5-22-13	834-18 G012-1036-01	. TUBE, Delivery (CAGE 92114) . . . . . . (CAGE 60240)	1	
	Notes: 1. Hose clamp (P/N MS22064-5, NIIN 00-269-3760, multi-position, Tinnerman) or electrical tiedown strap (P/N MS3367-1-0, NIIN 00-384-6582), may be used as alternative replacement.			

NUMERICAL INDEX

Part Number	Figure and Index Number	SM&R Code
AB2662V3N	5-22-2	PAOZZ
G001-5030-01	5-22-8	PAOZZ
G012-1028-01	5-22-4	PAOZZ
G012-1028-02	5-22-4	PAOZZ
G012-1028-03	5-22-4	PAOZZ
G012-1028-04	5-22-4	PAOZZ
G012-1033-01	5-22-9	PAOZZ
G012-1034-01	5-22-11	PAOZZ
G012-1035-01	5-22-12	PAOZZ
G012-1036-01	5-22-13	PAOZZ
G012-1046-01	5-22-10	PAOZZ
G012-1050-01	5-16-6	PAOZZ
	5-17-7	PAOZZ
	5-18-7	PAOZZ
	5-19-7	PAOZZ
	5-20-6	PAOZZ
	5-21-7	PAOZZ
	5-22	PAOZZ
G012-1050-02	5-16-6	PAOZZ
	5-17-7	PAOZZ
	5-18-7	PAOZZ
	5-19-7	PAOZZ
	5-20-6	PAOZZ
	5-21-7	PAOZZ
	5-22	PAOZZ
G012-1050-03	5-16-6	PAOZZ
	5-17-7	PAOZZ
	5-18-7	PAOZZ
	5-19-7	PAOZZ
	5-20-6	PAOZZ
	5-21-7	PAOZZ
	5-22	PAOZZ
G012-1050-04	5-16-6	PAOZZ
	5-17-7	PAOZZ
	5-18-7	PAOZZ
	5-19-7	PAOZZ
	5-20-6	PAOZZ
	5-21-7	PAOZZ
	5-22	PAOZZ
M-101/AIC	5-16-3	PAOZZ
	5-17-3	PAOZZ
	5-18-3	PAOZZ
	5-19-3	PAOZZ
	5-20-3	PAOZZ
	5-21-3	PAOZZ
MS22016-1	5-19-6	PAOZZ
	5-20-5	PAOZZ
MS22064-5	5-22-9	PAOZZ
MS27796	5-17-6	PAOZZ
	5-18-6	PAOZZ
MS3367-1-0	5-22-9	PAOZZ
M22442/26-3	5-16-5	PAOZZ
	5-18-5	PAOZZ
M22442/42-1	5-17-5	PAOZZ
M23595/3-3	5-16-4	PAOZZ
	5-17-4	PAOZZ
	5-18-4	PAOZZ
	5-19-4	PAOZZ
	5-21-4	PAOZZ
00-5377	5-22-6	PAOZZ
00-6268	5-22-7	PAOZZ
123AB50534-5	5-21-6	PAOZZ
211-60	5-22-8	PAOZZ
249-425	5-22-11	PAOZZ
339-06-1	5-22-10	PAOZZ
450-13	5-22-12	PAOZZ
450-134A	5-22-9	PAOZZ
57C12661-1	5-20-4	PAOZZ
70280-10	5-16-1	PAOZZ
	5-17-1	PAOZZ
	5-18-1	PAOZZ
	5-19-1	PAOZZ
	5-20-1	PAOZZ
	5-21-1	PAOZZ
70280-20	5-16-2	PAOZZ
	5-17-2	PAOZZ
	5-18-2	PAOZZ
	5-19-2	PAOZZ
	5-20-2	PAOZZ
	5-21-2	PAOZZ
765AS287-1	5-16-4	PAOZZ
	5-17-4	PAOZZ
	5-18-4	PAOZZ
	5-19-4	PAOZZ
	5-21-4	PAOZZ
765AS380-1	5-19-5	PAOZZ
	5-21-5	PAOZZ
834-11	5-22-1	PAOZZ
834-12	5-22-3	PAOZZ
834-18	5-22-13	PAOZZ
834-25-1	5-22-4	PAOZZ
834-25-2	5-22-4	PAOZZ
834-25-3	5-22-4	PAOZZ
834-25-4	5-22-4	PAOZZ
834-37	5-22-5	PAOZZ
834-75-01	5-16-6	PAOZZ
	5-17-7	PAOZZ
	5-18-7	PAOZZ
	5-19-7	PAOZZ
	5-20-6	PAOZZ

NUMERICAL INDEX

Part Number	Figure and Index Number	SM&R Code
834-75-01	5-21-7	PAOZZ
	5-22	PAOZZ
834-75-02	5-16-6	PAOZZ
	5-17-7	PAOZZ
	5-18-7	PAOZZ
	5-19-7	PAOZZ
	5-20-6	PAOZZ
	5-21-7	PAOZZ
	5-22	PAOZZ
834-75-03	5-16-6	PAOZZ
	5-17-7	PAOZZ
	5-18-7	PAOZZ
834-75-03	5-19-7	PAOZZ
	5-20-6	PAOZZ
	5-21-7	PAOZZ
	5-22	PAOZZ
834-75-04	5-16-6	PAOZZ
	5-17-7	PAOZZ
	5-18-7	PAOZZ
	5-19-7	PAOZZ
	5-20-6	PAOZZ
	5-21-7	PAOZZ
	5-22	PAOZZ

THIS PAGE INTENTIONALLY LEFT BLANK.

CHAPTER 6

ENHANCED PRESSURE-DEMAND OXYGEN MASK SYSTEMS MBU-23(V)/P SERIES AND MBU-24/P22P-16

Section 6-1. Description

6-1. GENERAL.

6-2. The latest and most advanced pressure demand oxygen mask systems in use in the Navy are the MBU-23(V)/P series low profile and MBU-24/P22P-16 oxygen masks. The MBU-23(V)/P series was developed for non-positive pressure breathing for g applications in aircraft not equipped with the Navy Combat Edge system. The MBU-24/P22P-16 oxygen mask was developed for positive pressure breathing for g applications as a component of the Navy Combat Edge (NCE) A/P22P-16 Aircrew Protective Assembly.

Section 6-2. MBU-23(V)/P Series Oxygen Mask

6-3. GENERAL.

6-4. The MBU-23(V)1/P Basic Oxygen Mask (figure 6-1) is a low profile pressure-demand oxygen mask developed for Non-Positive-Pressure-Breathing for g (Non-PBG) applications. The mask was designed as an alternative to the MBU-12/P and MBU-5/P to fit aircrew personnel having problems wearing the standard MBU-12/P oxygen mask. The MBU-23(V)1/P was developed for United States Navy and Marine Corps aircrew personnel flying high performance tactical jet and fixed-wing trainer aircraft. Developed by the Aircrew Systems Division of the Naval Air Warfare Center, Aircraft Division, NAS Patuxent River, MD, the MBU-23(V)1/P Oxygen Mask represents the Navy's latest technology in advanced oxygen masks and is the basic mask used in the development of the MBU-23(V)/P Series Oxygen Mask Assemblies.

6-5. The newly designed low profile MBU-23(V)1/P oxygen mask fits a wider range of face and nose shapes than some masks currently in use. It features a triangular shaped cover around the nose and mouth that provides an excellent seal. Separate inhalation and exhalation valves present less breathing resistance than current single valve masks.

6-6. CONFIGURATION.

6-7. The MBU-23(V)1/P Oxygen Mask Assembly consists of a silicone rubber facepiece with associated hard shell, inhalation and exhalation valves, flexible oxygen delivery hose, and left and right bayonet connectors. The separate inhalation and exhalation valve design requires the oxygen delivery hose to be offset from the center of the mask. The inhalation and exhalation valves are interconnected by a compensation tube. The compensation tube senses inhalation pressure and directs a portion of the pressure to the underside of the exhalation valve plate. This compensation pressure keeps the exhalation valve shut during inhalation. Mask to helmet connection is accomplished by the use of offset bayonet connectors that interface with current bayonet receivers.

6-8. The MBU-23(V)/P series enhanced pressure-demand oxygen mask configurations covered in this chapter are all based upon the MBU-23(V)1/P Basic Oxygen Mask Assembly. Each configuration in the series is developed by adding to or removing various major components of the basic MBU-23(V)1/P assembly to arrive at the desired configuration. Desired configurations are dependent upon the aircrew or aircraft application. Refer to table 6-1 and table 6-2.

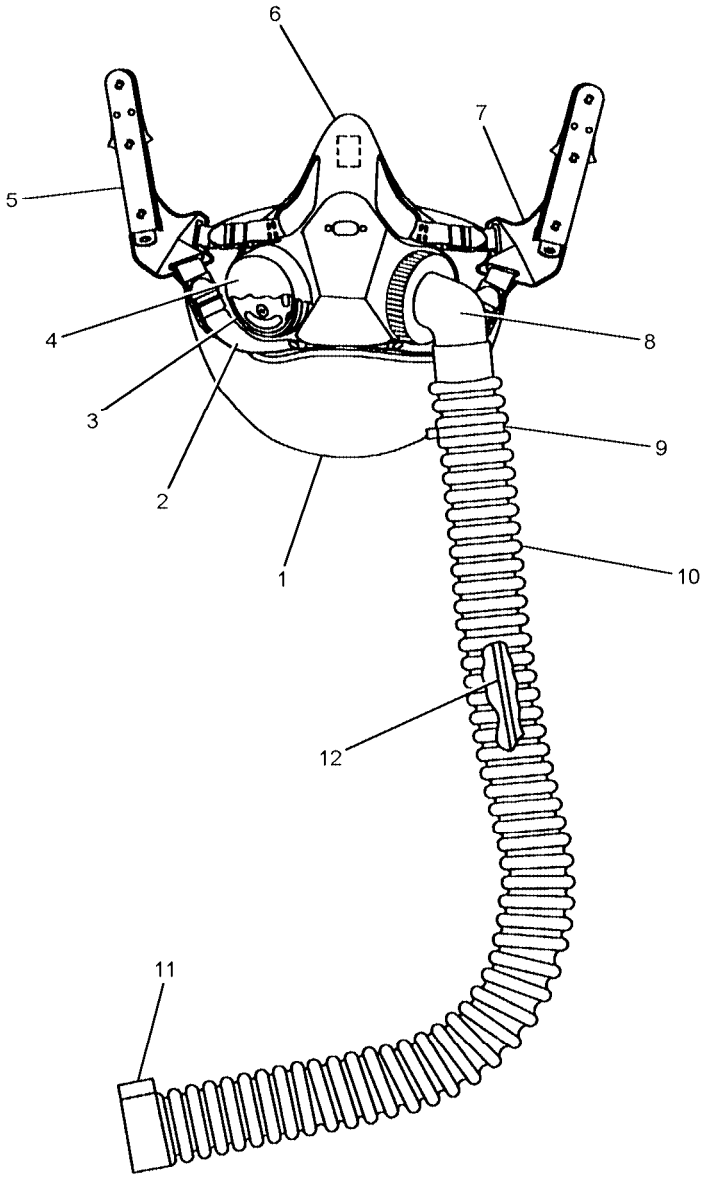

1. FACEPIECE
2. RETAINING STRAP
3. EXHALATION VALVE ASSY
4. EXHALATION VALVE CAP
5. RIGHT BAYONET
6. HARDSHELL
7. LEFT BAYONET
8. INHALATION VALVE ASSY
9. UPPER CABLE GUIDE
10. OXYGEN DELIVERY HOSE
11. LOWER CABLE GUIDE
12. STRAIN RELIEF CORD

6-1

Figure 6-1. MBU-23(V)1/P Basic Oxygen Mask Assembly

Table 6-1. Oxygen Mask Configuration Matrix

Mask Designator	Mask	Connector			Mike and Amp				Communication Cables						Regulators (Note 2)				Misc.
	MBU-23(V)1/P G010-1314-21/-22/-23/-24	MS22796	MC-3A - P/N MS22016-1 (Note 1)	CRK-90 - P/N 12AB50534-5 (Note 3)	Receptacle Assy	P/N N100493-00, 10-Volt	M-101/AIC - P/N MIL-M-26542/4	AM-7067A/A - P/N MS23595/3-3	CX-13126A/A - P/N M22442/26-3	CX-13127/A - P/N M22442/42-1	CX-13017/AR - P/N M22442/24-1	CX-13154/A - P/N 765AS380-1	CX-4434U/16 in.	M22442/33-4707	CRU-79/P (Note 4)	CRU-103	CRU-88/P	Panel Mounted or Walk-around	Offset Bayonets
MBU-23(V)2/P	X	X	–	–	–	–	X	X	X	–	–	–	–	–	O	X	O	–	X
MBU-23(V)3/P	X	X	–	–	–	–	X	X	–	X	X	–	–	–	O	X	O	–	X
MBU-23(V)4/P	X	X	–	–	–	–	X	X	X	–	–	–	–	–	–	X	O	–	X
MBU-23(V)5/P	X	–	X	–	–	–	X	X	–	–	–	X	–	–	–	–	–	X	X
MBU-23(V)6/P	X	–	X	–	X	–	X	–	–	–	–	X	X	–	–	–	–	X	X
MBU-23(V)7/P	X	–	–	X	–	–	X	X	–	–	–	X	–	–	–	–	–	X	X
MBU-23(V)8/P	X	–	–	–	–	X	–	–	–	–	–	–	X	–	–	–	–	–	X
MBU-23(V)9/P	X	X	–	–	X	–	X	–	–	–	–	–	–	X	–	–	–	–	X

Legend: X = Required – = Not Applicable
O = Optional

Notes:

1. MC-connector used with panel mounted regulator and walk-around unit.
2. Regulators are not a part of the oxygen mask configuration and are shown here for reference only. Refer to NAVAIR 13-1-6.4-2 for further information.
3. CRK-90 oxygen connector is only used in E-2C aircraft equipped with backpack emergency equipment.
4. LOX aircraft only.
5. Regulator-to-seat kit hose assembly is not part of oxygen mask configuration. Refer to NAVAIR 13-1-6.3-1 for further information.
6. Use of Bayonet, LH, P/N 70280-10 NIIN 00-186-0276 and Bayonet, RH, P/N 70280-20, NIIN 00-186-0277 with MBU-23/P oxygen masks is authorized.

Table 6-2. Oxygen Mask Application Matrix

Mask Designator	Fighter Recon				Attack		ASW	Electronics		Cargo Transport	Trainers								Tilt Rotor
	Fighters	F-5 Series	F/A-18	All Reconnaissance	AV-8B	All Other Attack	S-3 Series	E-2C	EA-6 Series	C-2A Pilot and Copilot	T-2C	T-6 Series	TA-4 Series	TA-7C	TAV-8B	TE-2C	CT-34 Series	T-45A	MV-22
MBU-23(V)2/P	X	–	X	X	–	X	–	–	X	–	X	–	X	X	–	–	–	X	–
MBU-23(V)3/P	–	–	–	–	–	–	X	–	–	–	–	–	–	–	–	–	–	–	–
MBU-23(V)4/P	–	–	O	–	X	–	–	–	–	–	–	–	–	–	X	–	–	–	–
MBU-23(V)5/P	–	–	–	–	–	–	–	X	–	–	–	–	–	–	–	X	–	–	–
MBU-23(V)6/P	–	–	–	–	–	–	–	–	–	X	–	–	–	–	–	–	X	–	–
MBU-23(V)7/P	–	–	–	–	–	–	–	X	–	–	–	–	–	–	–	–	–	–	–
MBU-23(V)8/P	–	–	–	–	–	–	–	-	–	–	–	–	–	–	–	–	–	–	X
MBU-23(V)9/P	–	X	–	–	–	–	–	-	–	–	–	X	–	–	–	–	–	–	–

Legend: X Required
O Optional

6-9. MBU-23(V)/P SERIES OXYGEN MASK CONFIGURATIONS. The MBU-23(V)/P series mask assembly configurations are based on aircraft and aircrew communication equipment requirements. Configurations are as follows:

6-10. MBU-23(V)2/P Oxygen Mask Assembly. The MBU-23(V)2/P oxygen mask assembly (figure 6-2), equipped with an M-101/AIC microphone and an AM-7067A/A amplifier, is designed for use in aircraft where a mask is required at all times. Specific aircraft are the F-14, all reconnaissance aircraft, EA-6, KA-6D, T-2C, TA-4, TA-7C, and T-45A. The MBU-23(V)2/P is used with a helmet and a chest mounted regulator. The mask is also equipped with an MS27796 connector and CX-13126A/A communications cable.

6-11. MBU-23(V)3/P Oxygen Mask Assembly. The MBU-23(V)3/P oxygen mask assembly (figure 6-3), equipped with an M-101/AIC microphone and an AM-7067A/A amplifier, is designed for use in S-3 aircraft. The MBU-23(V)3/P is used with the HGU-49/P helmet and the HGU-68(V)3/P helmet incorporating the binaural M22442/26-3 and the 40 inch CX-13017/AR communications cables. The 40 inch cable is secured to the regulator-to-seat kit oxygen delivery hose. The mask is equipped with MS27796 connector for use with chest-mounted diluter-demand regulator or CRU-79/P miniature regulator without the MS27796 connector.

6-12. MBU-23(V)4/P Oxygen Mask Assembly. The MBU-23(V)4/P oxygen mask assembly (figure 6-4), equipped with an M-101/AIC microphone and an AM-7067A/A amplifier, is designed for use in the AV-8 series aircraft where an oxygen mask is required at all times. In the AV-8 series the mask is used with a helmet and is equipped with the CX-13126A/A communications cable and MS27796 connector for use with torso mounted diluter-demand regulators.

6-13. MBU-23(V)5/P Oxygen Mask Assembly. The MBU-23(V)5/P oxygen mask assembly (figure 6-5), equipped with an M-101/AIC microphone and an AM-7067A/A amplifier, is designed for use in OV-10, E-2C, and TE-2C aircraft. The mask is fitted with the CX-13154/A communications cable as well as the MC-3A connector for use with a panel mounted regulator, walk-around unit, or bailout bottle.

6-14. MBU-23(V)6/P Oxygen Mask Assembly. The MBU-23(V)6/P oxygen mask assembly (figure 6-6), equipped with an M-101/AIC microphone, is designed for use in the C-2A and T-34 aircraft. The MBU-23(V)6/P communication configuration does not require an amplifier. The mask is fitted with the CX-13154/A and CX-4434/U 16 inch communications cables. The MBU-23(V)6/P is equipped with the MC-3A connector for use with a panel mounted regulator, walk-around unit, or bailout bottle.

6-15. MBU-23(V)7/P Oxygen Mask Assembly. The MBU-23(V)7/P oxygen mask assembly (figure 6-7) is designed for use in the E-2C aircraft which is equipped with the crew backpack escape system. The mask is equipped with the M-101/AIC microphone, AM-7067A/A amplifier, CX-13154/A communications cable, and the CRK-90 connector which is used with a panel mounted regulator or emergency escape system.

6-16. APPLICATION.

6-17. The MBU-23(V)/P Series Oxygen Masks were designed as an alternative solution for personnel having problems wearing the MBU-12/P oxygen mask and as a replacement for the MBU-5/P oxygen mask. The individual configurations of the MBU-23(V)/P series were designed to meet aircrew requirements in specific types of aircraft.

6-18. SERVICE LIFE.

6-19. The MBU-23(V)/P Series Oxygen Mask Assemblies shall remain in service as long as repairs can be made at the organizational level of maintenance.

6-20. MODIFICATIONS.

6-21. Table 6-3 contains a list of technical directives applied to the MBU-23(V)/P Series Oxygen Mask Assemblies. There are no modifications currently authorized for the MBU-23(V)/P Series oxygen masks.

Table 6-3. MBU-23(V)/P Series Oxygen Mask Assembly Directives

Description of Modification	Application	Modification Code
None	None	None

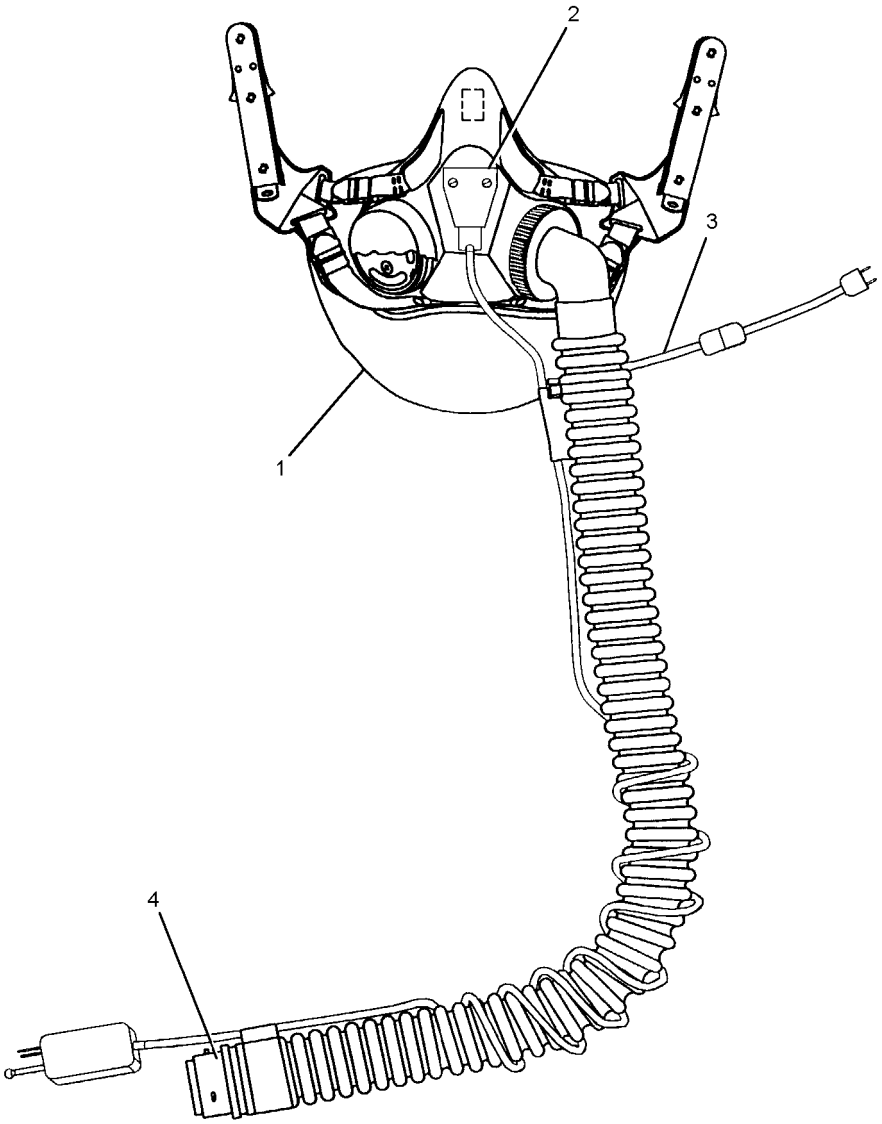

1. BASIC MASK
2. M-101/AIC MICROPHONE ASSY/ AM-7067/A AMPLIFIER ASSY
3. CX-13126A/A CABLE ASSY
4. OXYGEN CONNECTOR, MS27796

6-2

Figure 6-2. MBU-23(V)2/P Oxygen Mask Assembly

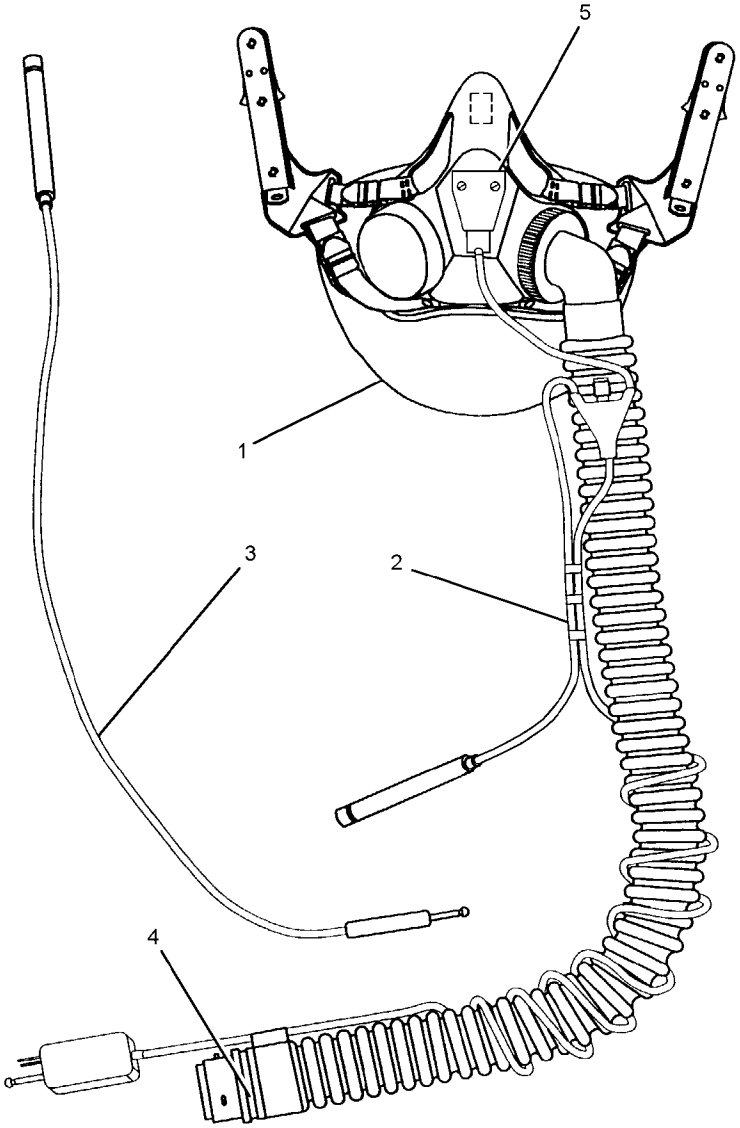

1. BASIC MASK
2. M22442/42-1 CABLE ASSY
3. CX-13017/AR CABLE ASSY
4. OXYGEN CONNECTOR, MS27796
5. M-101/AIC MICROPHONE ASSY/
   AM-7067/A AMPLIFIER ASSY

6-3

Figure 6-3. MBU-23(V)3/P Oxygen Mask Assembly

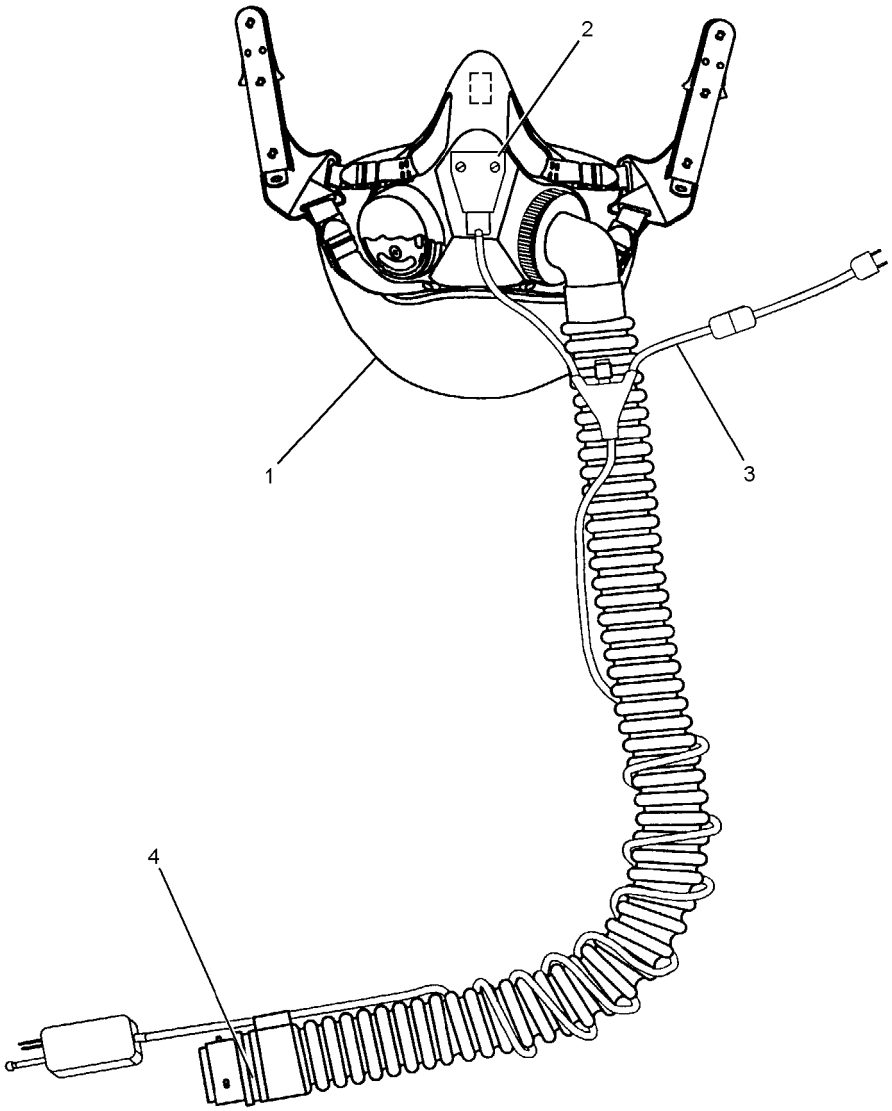

1. BASIC MASK
2. M-101/AIC MICROPHONE ASSY/ AM-7067/A AMPLIFIER ASSY
3. CX-13126A/A CABLE ASSY
4. OXYGEN CONNECTOR, MS27796

6-4

Figure 6-4. MBU-23(V)4/P Oxygen Mask Assembly

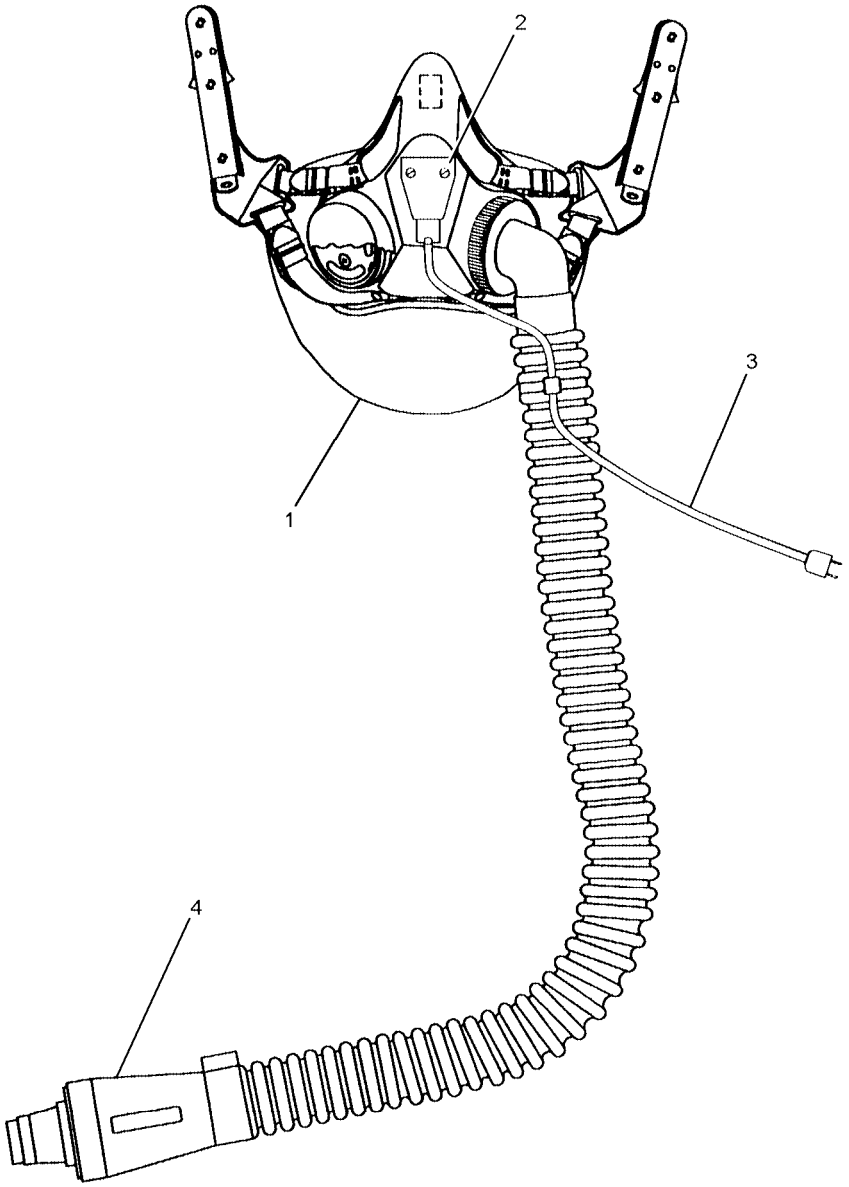

1. BASIC MASK
2. M-101/AIC MICROPHONE ASSY/ AM-7067/A AMPLIFIER ASSY
3. CX-13154/A CABLE ASSY
4. MC-3A OXYGEN CONNECTOR

6-5

Figure 6-5. MBU-23(V)5/P Oxygen Mask Assembly

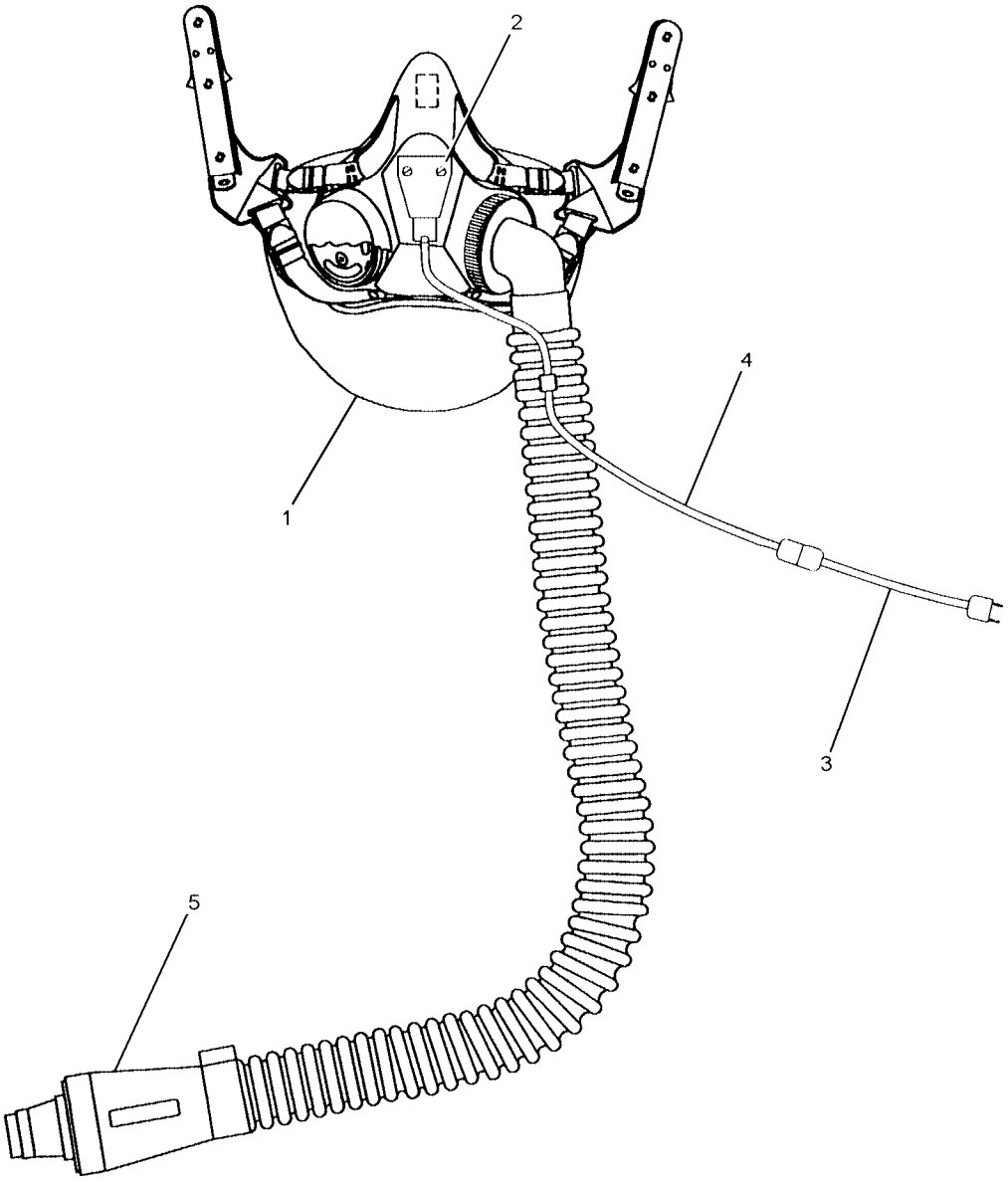

1. BASIC MASK
2. M-101/AIC MICROPHONE ASSY/ RECEPTACLE
3. CX-13154/A CABLE ASSY
4. CX-4434U/16IN CABLE ASSY
5. MC-3A OXYGEN CONNECTOR

6-6

Figure 6-6. MBU-23(V)6/P Oxygen Mask Assembly

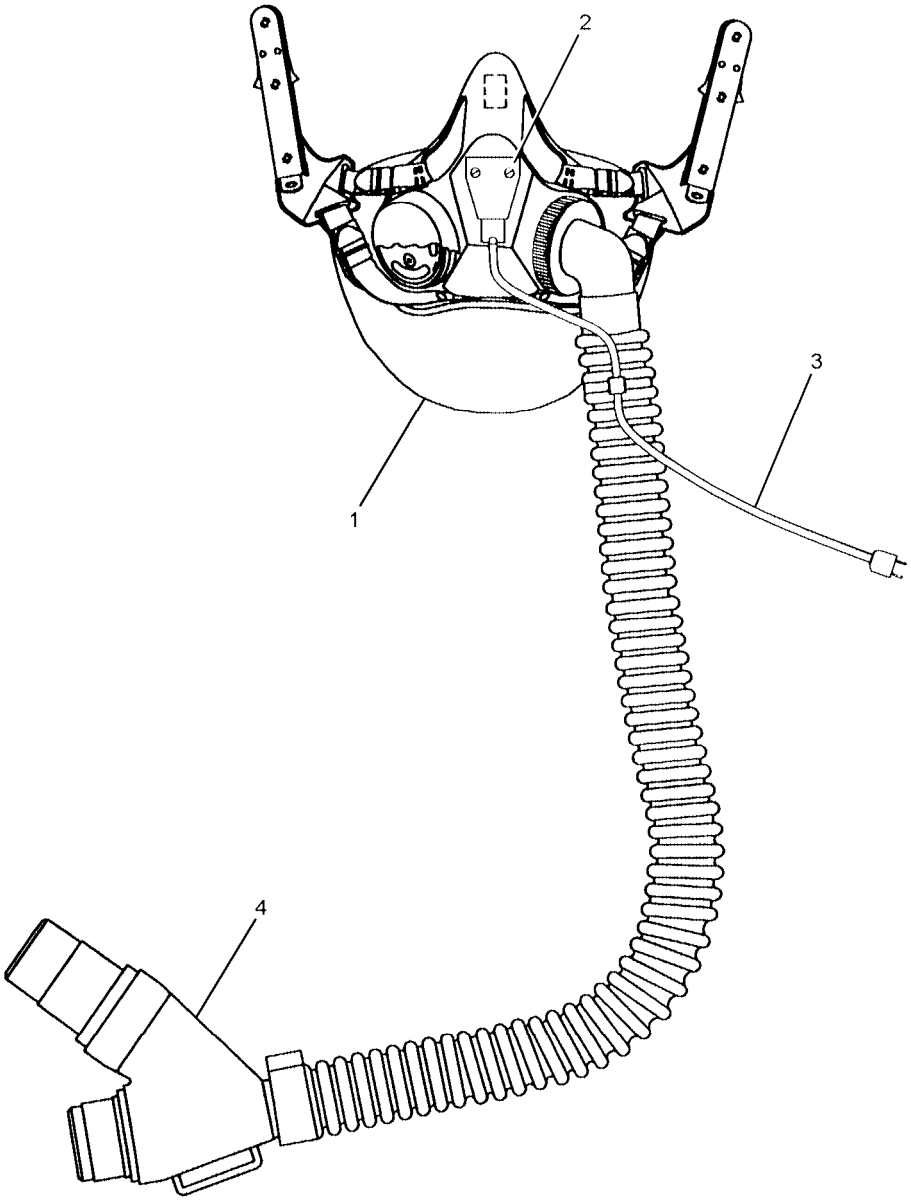

1. BASIC MASK
2. M-101/AIC MICROPHONE ASSY/ AM-7067/A AMPLIFIER ASSY
3. CX-13154/A CABLE ASSY
4. CRK-90 OXYGEN CONNECTOR

6-7

Figure 6-7. MBU-23(V)7/P Oxygen Mask Assembly

6-22. SIZING AND FITTING.

6-23. The concept of sizing as used in this section refers to the basic method used by the Aircrew Survival Equipmentman to determine proper size mask to order for a specific crewmember. Once the proper size mask has been obtained, desired configuration and fitting can be accomplished.

NOTE

The MBU-23/P oxygen mask shall be procured open purchase or GSA contract directly from the manufacturer at the following address:

Gentex Corporation
11525 6th Street
Rancho Cucamonga, CA 91730
Telephone: (909) 481-7667
Fax: (909) 481-7759

6-24. SIZING. There are four mask sizes available, small narrow, medium narrow, medium wide, and large wide. Refer to figure 6-8 and proceed as follows to determine individual crewmembers mask size.

1. Advise crewmembers to relax facial muscles and position jaw as it would normally be when wearing a mask.

2. Using sizing calipers, measure distance between nasal root and supramental as illustrated in figure 6-8. Compare caliper measurement to a standard millimeter scale and refer to sizing chart in figure 6-8 to obtain mask size.

3. If measurement is near a size boundary, try both sizes for comfort before selecting one for fitting.

6-25. FITTING. When proper size mask has been obtained, the crewmember must wear the mask during fitting process. If eyeglasses are normally worn, the glasses must also be worn during fitting. When glasses and mask are donned, proceed as follows.

1. Don properly fitted helmet.

2. With mask straps loosened, don mask and insert bayonets into the bayonet receivers to the second click.

3. While holding mask centered on crewmember's face, have crewmember tighten mask straps evenly to achieve centered fit. Check to ensure there is no twisting or bunching of mask straps. The straps should be taut and the mask should feel comfortable, but snug.

4. Lower helmet visor to ensure mask is centered on crewmember's face. The mask and visor should be in alignment. Adjust straps as necessary until centered fit is achieved.

5. After mask has been on for a few minutes, have mask removed and look for signs of non-uniform pressure. Readjust straps and repeat step 4 as necessary to obtain uniform fit.

6. If prominent cheekbones or eyeglasses prevent uniform pressure, especially in the nose/nasal root region, try next larger or smaller mask size and repeat steps 2 thru 5.

NOTE

If crewmembers wearing a large wide or medium wide mask has a comfortable, stable fit, but experiences leakage in the cheek area during use, try next smaller size mask.

7. If mask fitting procedures in steps 1 through 6 do not correct pressure problems in cheekbone and nose/nasal root area, the hardshell may require alteration.

6-26. Hardshell Alteration. If hardshell requires alteration to ensure proper fitting of the mask, material may be removed using a file as follows:

Materials Required

Quantity	Description	Reference Number
1	Tiedown Strap	MIL-S-23190 NIIN 00-984-6582
As Required	Isopropyl Alcohol	TT-I-735 NIIN 00-286-5435

CAUTION

Do not remove any material from the hardshell any closer than 1/4 inch of the valsalva ports.

1. Mark the area from which material must be removed from the hardshell. Exercise care not to remove anymore material than is necessary to achieve a proper fit.

2. Remove microphone assembly.

a. Press red button on the U-173/U plug and disconnect plug from the AM-7067A/A amplifier.

b. Remove two mounting screws from amplifier.

c. Without twisting, gently pull the amplifier away from the microphone bracket.

d. Remove microphone bracket with attached microphone element from the inside of the mask.

3. Remove inhalation valve, exhalation valve, and compensation tube.

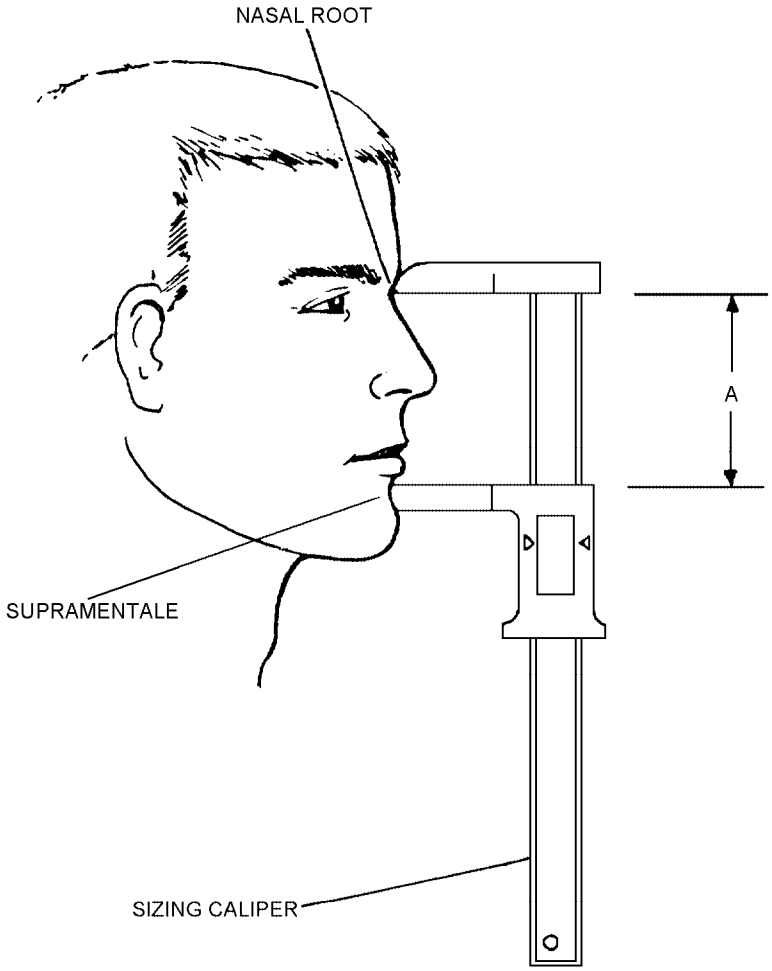

NASAL ROOT = DEEPEST IMPRESSION OF THE NOSE LINE

SUPRAMENTALE = DEEPEST IMPRESSION BETWEEN THE LOWER LIP AND THE CHIN

SIZING CHART

MASK SIZE	FACE LENGTH A (MILLIMETERS)
SMALL NARROW	LESS THAN 87
MEDIUM WIDE; MEDIUM NARROW	87 TO 100
LARGE WIDE	MORE THAN 100

6-8

Figure 6-8. Face Measurement

a. Remove exhalation valve cover.

b. Unthread Inhalation valve elbow from mask.

c. Using spanner wrench, remove exhalation valve lockring from valve on outside of mask.

d. Using spanner wrench, remove inhalation valve lockring from valve on outside of mask.

WARNING

Handle the delicate compensation tube with care. It is critical to proper operation of the exhalation valve. If kinks, twists, or other damage exists, the exhalation valve may not function properly.

e. Remove inhalation valve, exhalation valve, and compensation tube from mask by pushing valves through to inside of mask. The compensation tube easily slips off and on the inhalation and exhalation valve ports.

4. Separate the facepiece from the hardshell.

5. Using a hand file, remove material from the area marked in step 1.

6. Clean hardshell using isopropyl alcohol and let air dry.

7. Reassemble mask.

a. Insert facepiece into hardshell and align inhalation and exhalation valve openings (see figure 6-23).

NOTE

Ensure inhalation and exhalation valves are installed in correct positions. Viewing inside of mask, the inhalation valve is on the left.

The soft rubber facepiece acts as the gasket for sealing the valves in place. Ensure facepiece material is not pinched between threads and hardshell.

b. Note alignment of keyways and insert threaded components of inhalation and exhalation valves through the mask from inside. Ensure holes in facepiece and hardshell are properly aligned.

c. Install exhalation valve lockring, with flat side of lockring to outside, and tighten with spanner wrench. Do not over-tighten.

d. Install and tighten inhalation lockring using spanner wrench, observing same precautions as in step c. Do not over-tighten.

NOTE

Check exhalation valve cover for proper fit.

e. Install rubber exhalation valve cover over outer exhalation valve lockring. Ensure openings in cover are oriented down.

WARNING

The delicate compensation tube is critical to the function of the exhalation valve. Ensure tube is free of kinks, twists, and other damage.

f. If compensation tube has become disconnected, reconnect tube to inhalation and exhalation valve compensation tube ports. Ensure connections are secure and there are no kinks or twists in the compensation tube.

WARNING

Cross threading may give a false indication that inhalation valve elbow is properly tightened. A cross-threaded elbow may separate during flight.

g. Install washer and carefully thread inhalation valve elbow onto inhalation valve and hand tighten. Check to ensure cross thread did not occur.

h. Position microphone bracket with attached microphone element inside the mask.

i. Position amplifier on the outside of the mask and press the amplifier connector pins, through the facepiece holes, into the microphone bracket without twisting. Install amplifier attaching screws and secure the amplifier to the microphone bracket. Do not over-tighten screws.

j. Insert U-173/U plug into AM-7067A/A amplifier ensuring red locking button engages.

k. Test microphone assembly for proper operation.

NOTE

The test should be performed using Oxygen Hose and Communications Test Set TTU-489/E in accordance with NAVAIR 17-15BC-22. If Test Set TTU-489/E is not available, standard shop procedures shall be used to test the microphone assembly.

6-27. Softshell (Facepiece) Trimming. If necessary for crewmembers comfort, the facepiece may be trimmed in the area under the chin as follows:

1. Mark the area of the facepiece to be trimmed.

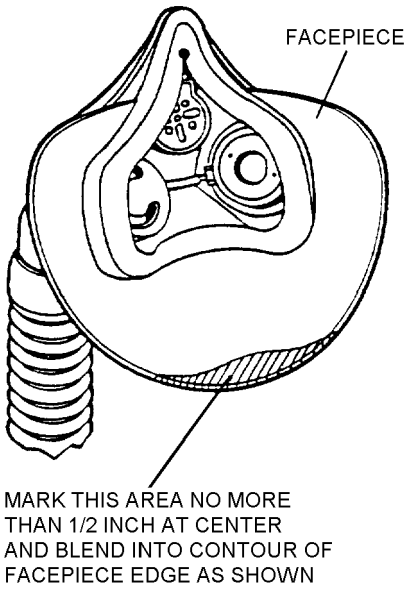

6p27s1

Step 1 - Para 6-27

NOTE

Maximum depth trimmed shall not exceed 1/2 inch from the center edge nor extend laterally above the jawline.

2. Using small scissors carefully remove area marked for trimming in step 1. Blend trim area with contour of facepiece edge so there will be no sharp corners.

3. Check mask for proper fit. Repeat above steps as necessary. But do not exceed maximum depth of 1/2 inch from center edge of facepiece.

6-28. Visor/Mask Interface Adjustment. Before the function of the oxygen mask, visor, and helmet can be considered acceptable, all three units must interface properly. Refer to Chapter 4 for helmet, visor, and mask configurations. Check interface of mask and visor as follows:

1. With visor down, check that visor contacts hardshell of mask between back edge of valsalva port and rear edge of hardshell. If aircrewmember wears glasses, check for interference with visor.

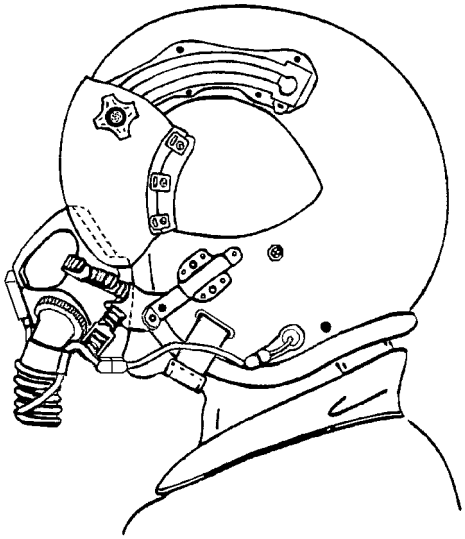

6p28s1

Step 1 - Para 6-28

2. If adjustments are necessary for standard visors:

a. Lower visor to in-service position.

NOTE

If no light is visible to wearer between mask and visor, the visor does not need to be trimmed.

b. Place lens snugly around nose section of oxygen mask and along masks suspension strap.

CAUTION

Care must be taken during trimming and sanding procedure to avoid scratching or marring lens.

c. If lens need to be trimmed, using a hand electric grinder, carefully grind visor lens away until lens follow contour of the mask. Remove no more than 1/8 inch of lens at a time. Trim slowly, ensure edges are even, and check fit with wearer frequently. After proper fit has been achieved, remove sharp edges using No. 240 grit sandpaper.

6-29. CONFIGURATION BUILD-UP.

6-30. Refer to table 6-1, Oxygen Mask Configuration Matrix, for components applicable to individual mask configurations and table 6-4 for installation of components.

6-31. INSTALLATION OF BAYONET RECEIVER ASSEMBLY. To install the bayonet receiver assembly, proceed as follows:

Materials Required

Quantity	Description	Reference Number
1	Bayonet Receiver Assembly	93A8514 (CAGE 97427)
1	Bayonet, LH	G013-1000-01 -or- P/N 70280-10 NIIN 00-186-0276
1	Bayonet, RH	G013-1000-02 -or- P/N 70280-20 NIIN 00-186-0277
As Required	Adhesive, Polychloroprene, Class 3	MIL-A-5540 NIIN 00-515-2246
As Required	Adhesive, RTV 102/732	MIL-A-46106 NIIN 00-877-9872
As Required	Thread, Nylon, Type E	V-T-295 NIIN 00-244-0609

CAUTION

Ensure that TPL assembly and chin/nape strap assembly are properly fitted and adjusted to aircrewmember's head prior to drilling holes in helmet shell assembly. Location/alignment of the bayonet receiver assembly is critical, since the bayonet receivers are not adjustable.

1. Have aircrewmember don properly fitted helmet assembly.

NOTE

Aircrewmembers who will be wearing personal prescription glasses, aviator sunglasses, or laser spectacles during flight, should be wearing those items while fitting the mask.

2. With helmet properly fitted and oriented on head, have aircrewmember hold oxygen mask in proper position on face. Lower visor until contours of mask and visor are fully mated. Lock visor in place.

3. Insert each bayonet of oxygen mask harness assembly into a bayonet receiver to the second locking position. The projections on bayonet receiver should be positioned toward the tip end of the oxygen mask bayonet.

4. While aircrewmember holds properly adjusted oxygen mask to face, ensure that the straps of the oxygen mask have equal tension.

NOTE

Ensure that placement of bayonet receivers is no closer than 1/2 inch from edge of helmet shell assembly.

5. While holding bayonet receivers firmly against the helmet shell assembly, ensure upper edge of bayonet offset is flush with helmet shell assembly edgeroll (figure 6-9). Then, trace outline of each bayonet receiver with a lead pencil onto the helmet shell assembly. Do not use marker or grease pencil.

6. While holding only the bayonet receiver spacers against the helmet shell assembly at marked positions, use a lead pencil to mark the location of the upper receiver screw hole onto the right and left hand sides of the helmet shell assembly.

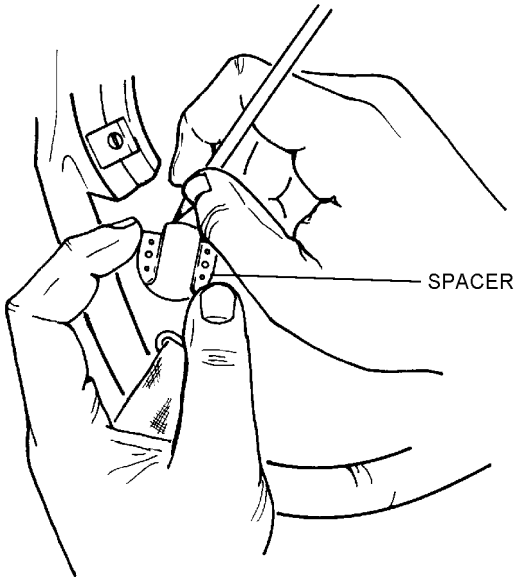

6p31s6

Step 6 - Para 6-31

NOTE

When drilling holes in helmet shell assembly, ensure that drill is held perpendicular to helmet shell assembly.

7. Remove mask and helmet from wearer and remove earcup assemblies. Hold pile fastener fabric inside helmet shell assembly away from area to be drilled. At the marked hole locations, drill each screw hole using a number 25 drill.

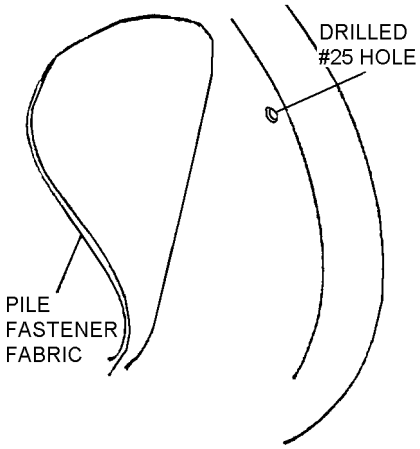

Step 7 - Para 6-31 6p31s7

NOTE

A small amount of RTV may be applied to the first few threads of screws prior to installation.

8. Attach only right and left hand receivers to helmet shell assembly using the upper screw, lock washer, and backup plate. Do not tighten screw more than four turns, allowing the assembly to rotate to its optimum location for the user, during mask fitting.

9. Reinstall earcup assemblies and have aircrewmember don helmet assembly and oxygen mask assembly, again inserting each bayonet into the second locking position of receiver.

NOTE

When experiencing difficulty inserting the bayonet into the bayonet receiver due to helmet shell edgeroll interference, fabricate and install bayonet receiver shims in accordance with paragraph 6-32, steps 1 through 4.

10. Readjust the straps on the mask tightening upper left and lower right straps together, keeping mask centered on face and equalizing tension on straps. While tightening straps, allow bayonet receivers to rotate freely to their optimum location for the individual. Lower visor and tighten visor knob. Visor cutout should mate with mask profile. Ensure comfortable, air tight fit of the mask is achieved by having crewmember breathe while manually twisting the oxygen hose to cut off air supply through hose. If leaks occur between mask and face, check the following:

a. Assure proper mask size has been issued (refer to paragraph 6-24).

b. Check fit of nape strap.

11. Using the receiver as a template, mark position of the remaining holes in the right and left hand receivers onto the helmet shell surface with a lead pencil. Have aircrewmember remove helmet and mask. Detach earcups from helmet shell interior and remove installed receivers.

12. Drill remaining holes following procedures detailed in step 7 above. Install spacers and receivers onto helmet shell at drilled locations using screws, lock washers, and backup plates. Tighten mounting screws securely ensuring receiver and spacer conform to the contour of the helmet surface.

13. Glue down pile fastener tape over backup plate.

14. Replace earcup assemblies.

15. Perform functional check in accordance with paragraph 6-49.

6-32. FABRICATION AND INSTALLATION OF BAYONET RECEIVER SHIMS. These shims provide increased bayonet receiver height to alleviate edgeroll induced bayonet/bayonet receiver interface problems. Fabricate shims as follows:

Materials Required

Quantity	Description	Reference Number
1	Spacer, Bayonet	80B4858 NIIN 01-141-5916
4	Screw, Pan Head, 6-32 x .500-Inch, Black	MS51957-30B NIIN 00-469-5382
As Required	Adhesive, Polychloroprene, Class 3	MIL-A-5540 NIIN 00-515-2246
As Required	Adhesive, RTV 102/732	MIL-A-46106 NIIN 00-877-9872

NOTE

Shims are fabricated from spacers provided in kit P/N 80B4858. Shims are intended for use by aircrewmembers experiencing difficulty inserting the bayonet into the receiver due to helmet shell edgeroll interference.

1. Remove spacers from the package and perform the following procedure on each spacer.

a. Position a spacer between the jaws of a bench vise with one raised projection facing the technician and clamp in place. Using a rotary hand tool (dremel) with a grinding drum or a rough cut hand file, grind or file raised projection flush with adjacent surface of spacer. Loosen vise and position remaining raised projection into position, clamp in place and repeat grinding/filing procedure.

b. Smooth uneven surfaces to a uniform height using a jeweler's file.

2. Detach right and left earcups from helmet shell earcup cavity pile fastener material and position clear of work area. Pull installed pile fastener material away from the interior surface of the earcup cavity and fold clear of work area.

3. Remove four screws, lock washers and backup plates securing installed spacers and receivers to helmet shell exterior, discard screws but retain remaining items for use during reinstallation.

NOTE

A small amount of RTV may be applied to each screw prior to adding lock washer and backup plate.

4. Using screws P/N MS51957-30B, lock washers and backup plate, reinstall shim, spacer and receiver onto helmet shell exterior. Ensure concave surface of shim is flush with helmet shell exterior prior to securing in place.

5. Cement pile fastener material into place on interior surface of earcup cavity.

Table 6-4. Installation of Components

Component	Paragraph
M-101/AIC Microphone and Receptacle	6-33
M-101/AIC Microphone	6-34
AM-7067A/A Amplifier	6-34
MS27796 Connector	6-40
MC-3A Connector	6-38
CRK-90 Connector	6-38
CX-13126A/A (M22442/26-3) Cable Assembly or CX-13127/A (M22442/42-1) Cable Assembly	6-36
CX-13017/AR (M22442/24-1) Cable Assembly	6-37
CX-13154/A Cable Assembly	6-35
CX-4434/U, 16-Inch Cable Assembly	6-35
Bayonet Receiver Assembly	6-31
Regulator-to-Seat Kit Hose Assembly	6-39
Torso/Chest Mounted Regulator	6-40

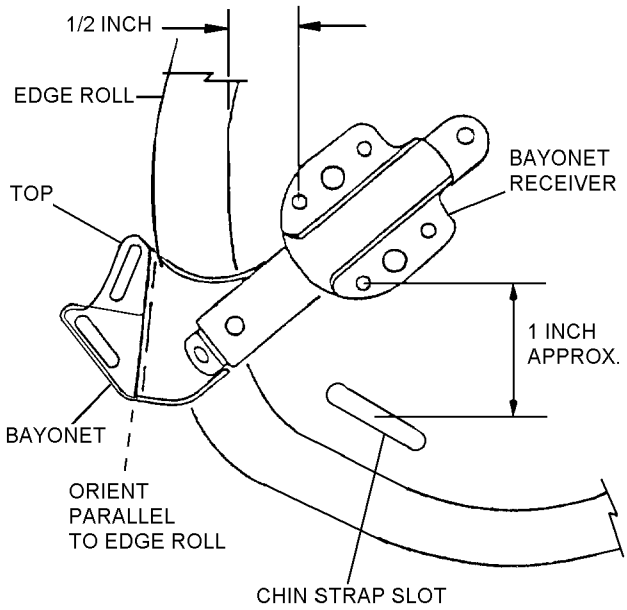

6-9

Figure 6-9. Positioning Bayonet Receivers

6-33. INSTALLATION OF M-101/AIC MICROPHONE ASSEMBLY AND RECEPTACLE ASSEMBLY (MBU-23(V)6/P ONLY). The M-101/AIC microphone assembly is installed as follows:

Materials Required

Quantity	Description	Reference Number
1	Microphone Assembly	M-101/AIC (CAGE 16575) NIIN 00-843-9957
2	Screw, Machine 2-56 x 5/16-Inch	MS35275-204 (CAGE 96906) NIIN 00-948-4042

CAUTION

When removing receptacle assembly use care not to damage gasket.

1. Remove two screws from receptacle assembly.

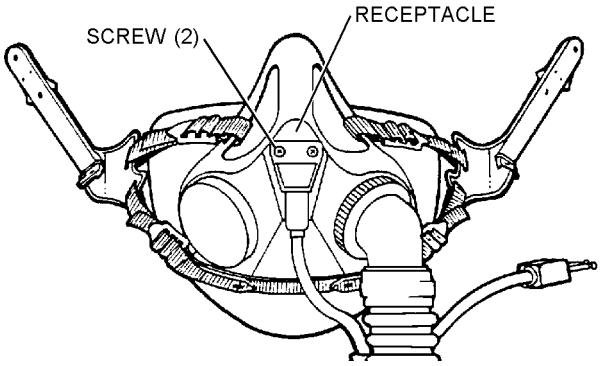

6p33s1

Step 1 - Para 6-33

2. Inside mask, separate microphone bracket from receptacle assembly.

3. Install microphone onto bracket and secure with two attaching screws; ensure set screws are tight.

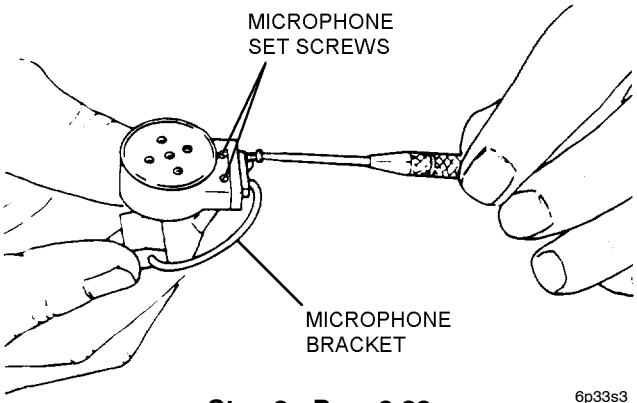

6p33s3

Step 3 - Para 6-33

CAUTION

Ensure screws are tight enough to form a good seal between connector and mask hardshell. However, do not strip screws or crack receptacle by over tightening. Over tightening may also damage internal communication wires.

NOTE

Aircrewmembers may experience a slight electrical shock when the face or lips touch the microphone set screws. In these cases, install the microphone backwards such that the set screws face away from the mouth. The microphone should perform satisfactorily when speaking into either side.

4. Place receptacle assembly in position on hardshell of mask and install microphone bracket inside mask and align with receptacle assembly.

a. Ensure proper seating of receptacle assembly and good gasket seal. Attach with two screws removed in step 1.

NOTE

Crewmembers may experience high noise level when completed mask and helmet assembly are donned. Proper positioning of M-101/AIC microphone can reduce the noise level.

5. Position M-101/AIC microphone so it is not in direct line with oxygen flow. Push microphone back against mask hardshell.

6-34. INSTALLATION OF M-101/AIC MICROPHONE AND AM-7067A/A AMPLIFIER. Install the M-101/AIC microphone and AM-7067A/A amplifier as follows:

Materials Required

Quantity	Description	Reference Number
1	Microphone Assembly	M-101/AIC (CAGE 16575) NIIN 00-843-9957
2	Screw, Machine 2-56 x 5/16-Inch	MS35275-204 NIIN 00-948-4042
1	Amplifier Assembly, AM-7067A/A	M23595 (CAGE 81349) NIIN 01-310-6240
1	Gasket, Amplifier	G012-1141-01 NIIN 01-314-9930
2	Screw, Machine 2-56 x 3/4-Inch	AN500D2-5
1	Bracket Assembly, Microphone, Oxygen	P/N 00-6268 NIIN 01-113-8365

1. Install microphone element onto microphone bracket pins, secure in place using two 2-56 x 5/16-inch long screws, then tighten the two microphone set screws.

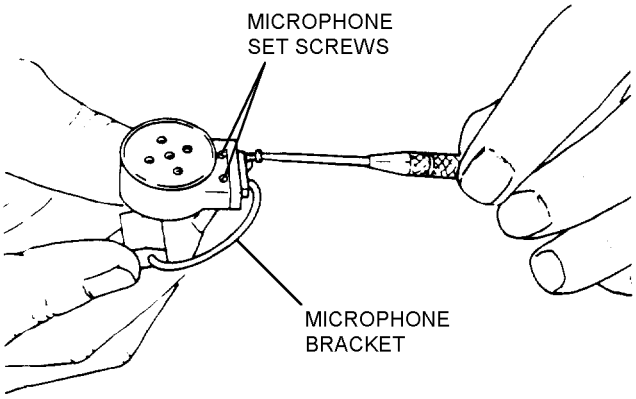

6p34s1

Step 1 - Para 6-34

NOTE

Amplifier gaskets can be ordered separately. Use care when removing and installing.

2. Place amplifier gasket on amplifier.

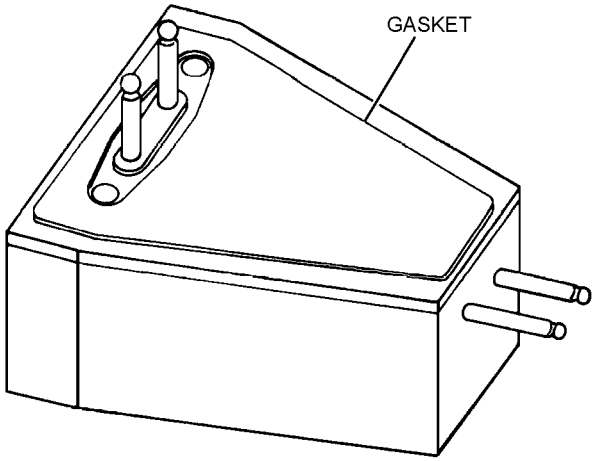

6p34s2

Step 2 - Para 6-34

CAUTION

Ensure screws are tight enough to form good seal between amplifier and hardshell, but do not strip screw threads or crack amplifier.

NOTE

Ensure correct screws are used to attach amplifier.

Aircrewmembers may experience a slight electrical shock when the face or lips touch the microphone set screws. In these cases, install the microphone backwards such that the set screws face away from the mouth. The microphone should perform satisfactorily when speaking into either side.

3. Install microphone and bracket into mask and align with amplifier.

a. Ensure proper seating of amplifier and good gasket seal. Attach using two screws P/N AN500D2-5.

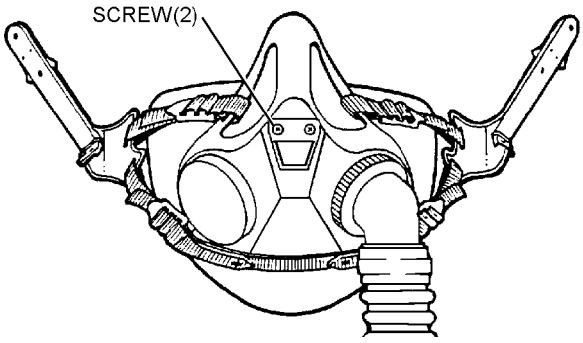

6p34s3a

Step 3a - Para 6-34

6-34A. INSTALLATION OF P/N N100493-00 MICROPHONE/AMPLIFIER 10 VOLT ASSEMBLY ON THE MBU-23(V)8/P (MV-22 OXYGEN MASK). To install the microphone/amplifier 10 volt assembly P/N N100493-00 on the MBU-23(V)8/P oxygen mask for use in the MV-22 aircraft, proceed as follows:

Materials Required

Quantity	Description	Reference Number
1	Microphone/ Amplifier, 10 Volt, Oxygen Mask	P/N N100493-00 NIIN TBD (Note 1)
2	Screw machine, 2-56 x 3/4 inch	MS35275-209 NIIN 00-941-3545
1	Cable, Branched, Electrical, CX-4434/U 16 Inch	P/N 57C12661-1-2-1-4 (CAGE 80058) NIIN 00-890-8614
1	Connector	MS27796 NIIN 01-703-4187

Notes: 1. Microphone /Amplifier, 10 Volt assembly P/N N100493-00 is commercially available from:
Gentex Corporation
Derry, NH
(603) 434-3002

1. Open package and remove amplifier and gasket. Position amplifier gasket on amplifier.

CAUTION

Ensure that screws are tight enough to form a good seal between the amplifier and the mask hardshell, but do not strip screws or crack amplifier.

NOTE

The screws removed during step 1 are not long enough for attachment of the amplifier.

2. Place amplifier with gasket into position on the mask hardshell with the electrical contact pins protruding into the interior of the mask facial cavity.

3. While holding amplifier in place on hardshell exterior, push microphone bracket firmly onto amplifier contact pins.

4. Insert 2-56 x 3/4-inch long screws through amplifier body into microphone bracket and tighten. Ensure proper seating of amplifier and good gasket seal.

6-35. INSTALLATION OF CABLE ASSEMBLIES CX-13154/A (MBU-23(V)5/P, MBU-23(V)6/P, AND MBU-23(V)7/P ONLY) AND CX-4434/U, 16 INCH (MBU-23(V)6/P ONLY). The following procedures are applicable to installation of both the CX-13154/A and CX-4434/U cable assemblies.

Materials Required

Quantity	Description	Reference Number
1	Cable Assembly, CX-13154/A	P/N 765AS380-1 NIIN 01-135-4320
1	Cable Assembly, CX-4434/U, 16-Inch	P/N 57C12661-1-2-1-4 (CAGE 80058) NIIN 00-890-8614

CAUTION

Do not overexpand cable guides with elastrator. Expand only enough to pass cable assembly through opening.

1. Pass elastrator (P/N 00-6297) through opening in upper cable guide on delivery hose and stretch open.

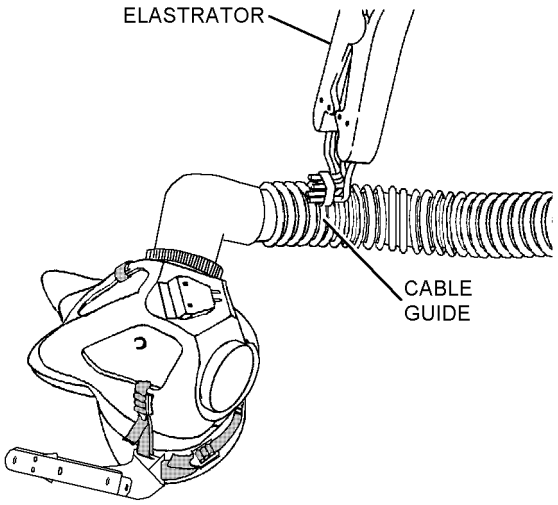

6p35s1

Step 1 - Para 6-35

2. Insert the nub on yoke of upper portion of cable assembly into the opening of the cable guide and remove elastrator.

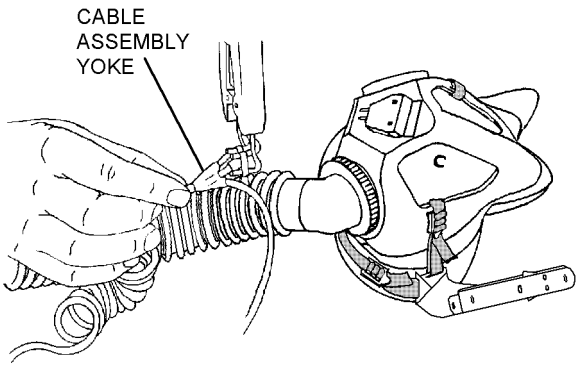

6p35s2

Step 2 - Para 6-35

3. Let cable assembly hang loosely from delivery hose.

4. Connect cable to corresponding receptacle, amplifier, or cable assembly.

6-36. INSTALLATION OF CX-13126A/A (MBU-23 (V)2/P AND MBU-23(V)4/P) OR CX-13127/A (MBU-23(V)3/P ONLY) CABLE ASSEMBLIES. The CX-13126A/A cable assembly is installed as follows:

NOTE

The CX-13126/A cable assembly was modified by Avionics Change No. 1248 and redesignated CX-13126A/A.

Materials Required

Quantity	Description	Reference Number
1	Cable Assembly, CX-13126A/A	M22442/26-3 NIIN 01-209-3117
As Required	Tape, Electrical, Black, 3/4-Inch	MIL-I-24391 NIIN 00-419-4291
1	Cable Assembly, CX-13127/A	M22442/42-1 NIIN 01-309-4909

CAUTION

Do not overexpand cable guides with elastrator. Expand only enough to pass cable assembly through opening.

1. Insert elastrator (P/N 00-6297) through opening in lower cable guide and expand the opening.

a. Insert upper portion of cable assembly through opening in cable guide.

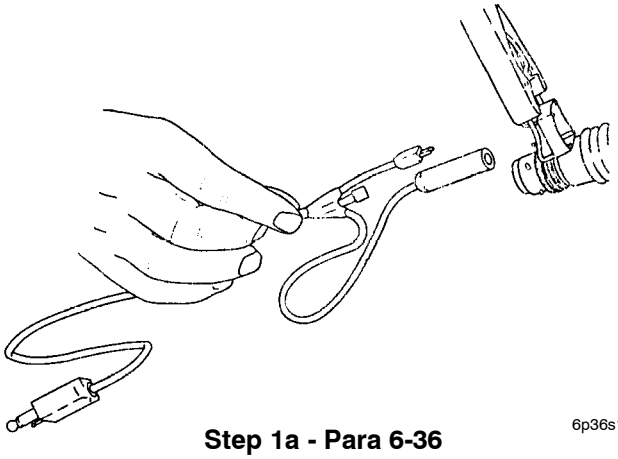

6p36s1a

Step 1a - Para 6-36

b. Feed cable through opening until approximately 6 inch of cable remains below the cable guide.

c. Remove elastrator.

2. Wrap cable around delivery hose.

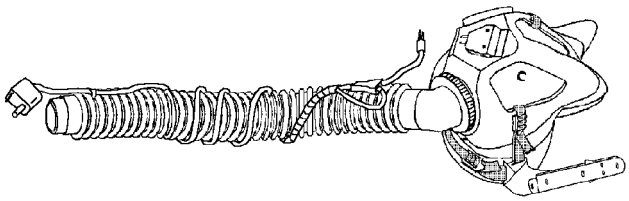

6p36s2

Step 2 - Para 6-36

3. Pass elastrator through opening in upper cable guide and expand opening.

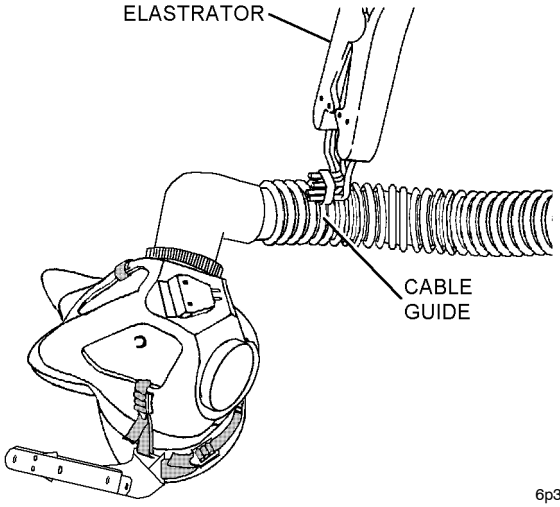

6p36s3

Step 3 - Para 6-36

a. Insert nub of cable yoke on upper portion of cable assembly through expanded cable guide opening and remove the elastrator.

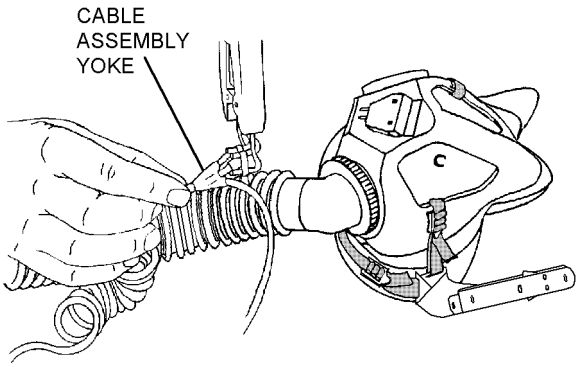

6p36s3a

Step 3a - Para 6-36

b. Connect cable assembly with corresponding receptacle assembly, amplifier assembly, or cable assembly.

6-37. INSTALLATION OF CX-13017/AR 40-INCH CABLE ASSEMBLY. The 40-inch cable assembly completes the communication cable setup required between helmet cable (CX-13128/A) and the cable assembly attached to the oxygen hose. The 40-inch CX-13017/AR cable assembly is installed as follows:

Materials Required

Quantity	Description	Reference Number
1	Cable Assembly, CX-13017/AR, 40-Inch	MIL-C-81866AS P/N 1099AS102
2	Strap, Tiedown, Electrical	MS3367-1-9

1. Position the 40-inch cable assembly on regulator-to-seat kit hose assembly (P/N 33C1178) so the male communication jack extends just below the fitting on the lower end of the regulator-to-seat kit hose.

2. Secure the 40-inch cable assembly to the regulator-to-seat kit hose using two tiedown straps.

3. Ensure straps are tight; cut off excess length of tiedown strap after tightening.

6-38. INSTALLATION OF MC-3A OR CRK-90 CONNECTOR FOR PANEL-MOUNTED REGULATORS, WALK-AROUND UNITS, AND BAILOUT BOTTLES. Install connectors as follows:

NOTE

If oxygen mask bag is to be used, it must be fabricated and installed before installing MC-3A connector. Refer to Chapter 5 for fabrication procedures.

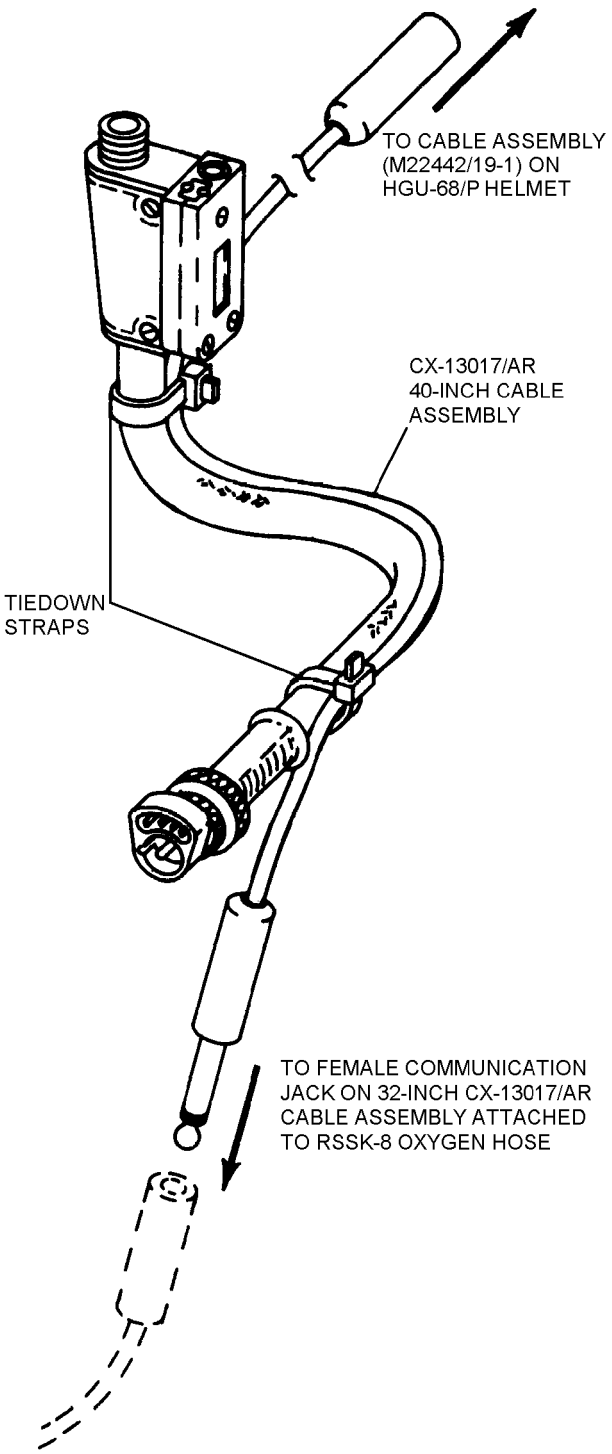

6p37s1

Steps 1 thru 3 - Para 6-37

Materials Required

Quantity	Description	Reference Number
1	Connector, MC-3A	MS22016-1 NIIN 00-694-8121
	-or-	
	Connector, CRK-90	P/N 123AB50534-5 (CAGE 26912)
1	Hose Clamp Pliers (See note)	P/N 450-813 (CAGE 53655) NIIN 01-073-4187
As Required	Hose Clamp	P/N 450-134A -or- MS22064-5

NOTE

If installing electrical tiedown strap instead of hose clamp, pliers are not required.

1. Route strain relief cord outside of delivery hose assembly. Adjust cord so there is no more than 1 inch extension of delivery hose when hose is grasped at each end and stretched. Mark hose accordingly.

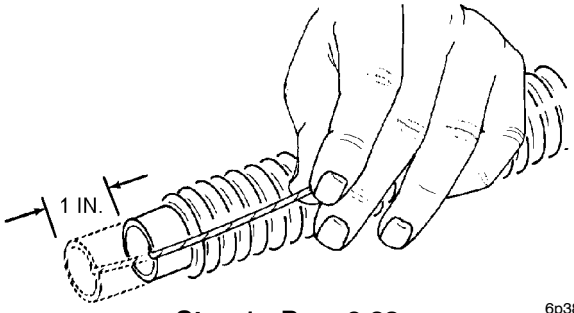

6p38s1

Step 1 - Para 6-38

2. Install connector into delivery hose assembly.

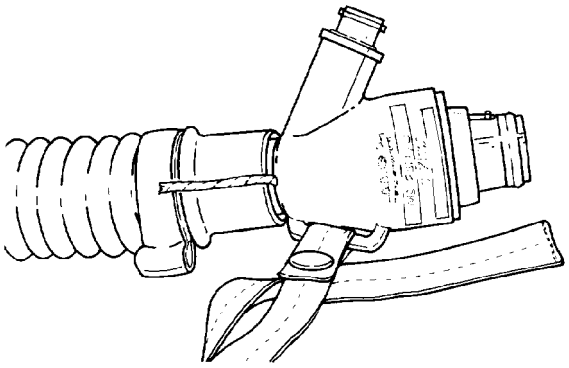

6p38s2

Step 2 - Para 6-38

WARNING

Do not reuse two locking position hose clamps.

CAUTION

Tighten mask hose clamp only enough to retain and seal delivery hose on connector. An excessively tightened clamp may damage hose or connector.

NOTE

If tiedown straps are to be used instead of hose clamp, refer to paragraph 6-60 for tiedown strap installation.

3. Using hose clamp pliers, install hose clamp over strain relief cord and lower end of delivery hose and tighten.

4. Cut off excess length of relief cord leaving no more than 1/2 inch extending past clamp.

5. Position lower cable guide over lower hose clamp.

6-39. INSTALLATION OF CRU-79/P MINIATURE REGULATOR AND REGULATOR-TO-SEAT KIT HOSE ASSEMBLY. To install the CRU-79/P Series miniature regulator and regulator-to-seat kit hose assembly, proceed as follows:

NOTE

If the oxygen mask bag is to be used, it must be fabricated and installed prior to installing the miniature regulator. Refer to Chapter 5. The installation of the CRU-79/P miniature regulator is shown in these procedures. The installation of other miniature regulators is similar.

Materials Required

Quantity	Description	Reference Number
1	Miniature Oxygen Breathing Regulator (CRU-79/P)	P/N 900-002-025-05 -or- P/N 900-002-025-03 -or- 29267-A1 -or- 3260024-0101
1	Hose Clamp Pliers	P/N 450-813 (CAGE 53655) NIIN 01-073-4187

Materials Required (Cont)

Quantity	Description	Reference Number
1	Regulator-to-Seat Kit Hose Assembly	P/N 12080-2 (CAGE 31441) NIIN 00-915-4603 -or- P/N 33C1178-1 (CAGE 80206) NIIN 00-915-4603
1	Locknut	P/N B122-2P2 NIIN 00-715-2761
1	Nipple Adapter	P/N 1-8FGD NIIN 00-433-2506
1	Elbow, 90°	AN911-1D

NOTE

If installing electrical tiedown strap instead of hose clamp (P/N 450-134A or P/N MS22064-5) pliers are not required.

1. Route cord outside tube assembly. Adjust so that there is no more than 1-inch extension in delivery tube when pulled from each end.

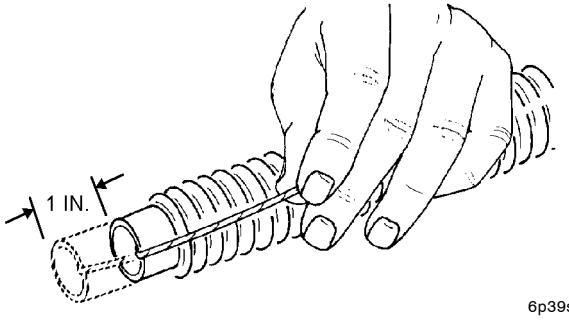

6p39s1

Step 1 - Para 6-39

NOTE

The CRU-79/P regulator is shown here for illustration purposes only.

2. Install CRU-79/P regulator into tube assembly.

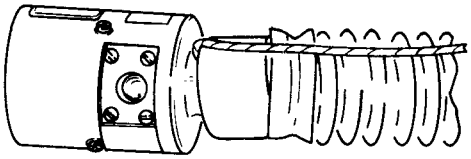

6p39s2

Step 2 - Para 6-39

WARNING

Do not reuse two locking position hose clamps.

CAUTION

Tighten mask hose clamp only enough to retain and seal the delivery tube on the CRU-79/P regulator. An excessively tightened clamp may damage the tube or regulator assembly. Be careful not to bend hook on clamp during installation.

NOTE

Electrical tiedown straps may be used in place of mask hose clamps (P/N 450-134A or P/N MS22064-5), refer to Chapter 5 for tiedown strap installation.

3. Using hose clamp pliers, install hose clamp over nylon cord and lower end of tube assembly and tighten. Ensure hook is fully inserted into notch of clamp, and that hook is not bent.

4. Cut off excess nylon cord so that there is no more than 1/2 inch of cord extending past clamp.

5. Lower cable guide over lower hose clamp.

NOTE

(CRU-79/P P/N 900-002-025-05 only) The locknut is not required on the 90° elbow. The 90° elbow male threads shall be wrapped with two turns of antisieze tape (MIL-T-27730) prior to installation step 8.

(CRU-79/P P/N 900-002-025-05 only) The type regulator already has a 90° elbow installed, steps 9 and 10 apply for installation only.

During installation of the locknut onto the fittings installed steps 6, 7, and 8. The locknut should be threaded onto the seat-kit hose, 90° elbow and adapter hand tight. Ensure a minimum of two to three full threads are showing on fittings prior to installation of components, the locknuts may have to be tightened to achieve the two to three threads.

6. Thread one locknut onto regulator-to-seat kit hose connection. Teflon face on locknut shall face toward female port of adapter assembly. See figure 6-10.

7. (CRU-79/P series regulators without installed 90° elbow only) Thread one locknut onto male-threaded portion of 90° elbow. Teflon face of locknut shall face toward the regulator during installation of the 90° elbow. See figure 6-10.

8. (CRU-79/P series regulators without installed 90° elbow only) Thread 90° elbow into inlet port of regulator hand tight. Using a wrench tighten 90° elbow a minimum of one full turn. An additional one turn can be used as required until 90° elbow is tight and orientation of female port of the fitting is pointing the opposite direction of the regulator outlet. Tighten locknut until flush with regulator body, once flush tighten locknut an additional one quarter of a turn until tight. See figure 6-10.

9. (All CRU-79/P series regulators) Thread one locknut onto male-threaded portion of nipple adapter coupling (see figure 6-10). Teflon face on locknut shall face toward 90° elbow during installation. Thread nipple adapter coupling into 90° elbow hand tight. Using a wrench tighten adapter coupling one turn. An additional one turn can be used if required until adapter is tight. Tighten locknut until flush with 90° elbow, once locknut is flush tighten locknut an additional one quarter of a turn or until tight. See figure 6-10.

10. Thread regulator-to-seat-kit hose into nipple adapter a minimum of two full turns until tight and proper orientation is achieved (see figure 6-10). Tighten locknut until locknut is flush with the nipple adapter, once locknut is flush with nipple adapter tighten locknut an additional one quarter of a turn or until tight.

11. Connect communication leads as required.

6-40. INSTALLATION OF THE TORSO/CHEST MOUNTED OXYGEN REGULATOR AND REGULATOR-TO-SEAT KIT HOSE ASSEMBLY. To install the oxygen regulator and regulator-to-seat kit assembly, proceed as follows:

NOTE

If the oxygen mask bag is to be used, it must be fabricated and installed prior to installing the regulator. Refer to paragraph Chapter 5.

The S-3 Series aircraft has been authorized to use the CRU-79/P miniature regulator. Refer to paragraph 6-39 for installation instructions.

Materials Required

Quantity	Description	Reference Number
1	Demand Oxygen Torso-Mounted Regulator (Type CRU-103/P)	P/N F241-2300-3 (CAGE 04577)
	-or-	
1	Positive Pressure Torso-Mounted Regulator (Type CRU-88/P)	P/N 2900W000-001 (CAGE U1605)
1	Regulator-to-Seat Kit Hose Assembly	P/N 57012-3-2 NIIN 01-407-0686 -or- P/N MBEU148020 (CAGE U1604) NIIN 01-407-0686 -or- P/N A11206-2 (CAGE 28845) NIIN 01-169-6129
1	Elbow, 45°	AN915-1D
1	Elbow, 90°	AN911-1D
1 (If Required)	Connector	MS27796 NIIN 01-730-2247
1 (If Required)	Hose Clamp Pliers (See note)	P/N 450-813 (CAGE 92114) NIIN 01-073-4187
1	Locknut	P/N B122-2P2 NIIN 00-715-2761
1	Nipple Adapter	P/N 1-8FGD NIIN 00-433-2506
1	Adapter, Straight Flared	P/N 1643340-1 or P/N 1643340-2
1	Adapter, 90° Elbow	P/N 1654461-1
As Required	Tape, Anti-Seize	MIL-T-27730

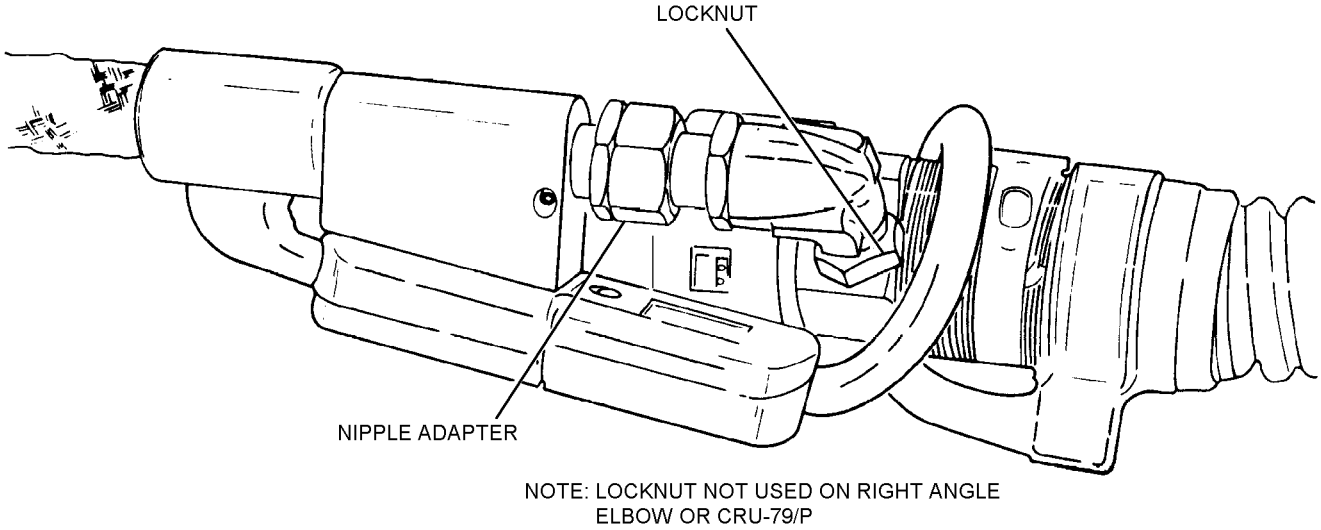

6-10

Figure 6-10. Assembly of Hoses to the CRU-79/P Series Regulator

Figure 6-11. Deleted

NOTE

Aircrewmembers may choose one of two adapters available for use on the CRU-82/P regulator, P/N 326005-0401. One is the straight flared adapter, P/N 1643340-1 and -2. The other is a modified 90 degree elbow adapter, P/N 1654461-1. The 90 degree adapter is authorized only if its use will not cause excessive bends while routing the seat kit hose.

If installing electrical tie down strap instead of hose clamp (P/N 450-134A or P/N MS22064-5), pliers are not required.

CAUTION

Care should be taken when removing pin from connector not to damage shell of connector.

1. Using 3/32-inch drive punch, remove pin from connector.

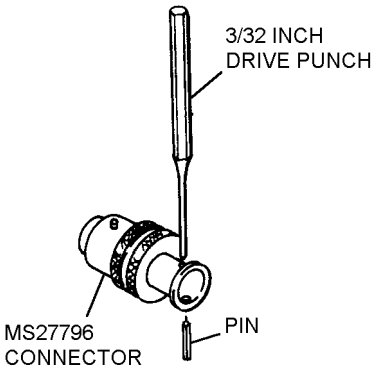

6p40s1

Step 1 - Para 6-40

CAUTION

Care should be taken to avoid damage to connector shell when inserting pin into connector.

2. Install cord and snap assembly to MS27796 connector; replace pin and slide connector into delivery tube.

3. Ensure that there is no more than 1-inch extension in delivery tube when pulled from each end. If necessary, remove connector from delivery tube and adjust length of cord.

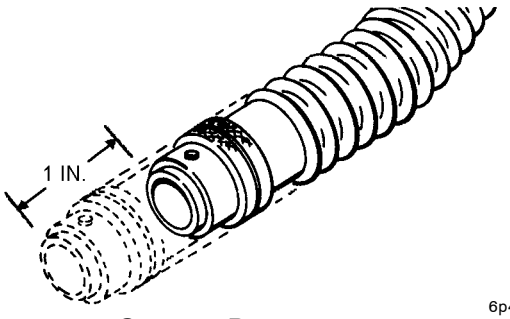

6p40s3

Step 3 - Para 6-40

WARNING

Do not reuse two locking position hose clamps.

CAUTION

Tighten mask hose clamp only enough to retain and seal the delivery tube on the CRU-79/P regulator. An excessively tightened clamp may damage the tube or regulator assembly.

Carefully avoid puncturing or otherwise damaging delivery tube with hose clamp tool or screwdriver.

NOTE

For ease of removing (or installing) hose clamps, place a small screwdriver under and slightly behind the hook.

If installing electrical tiedown strap in place of hose clamp (P/N 450-134A or MS22064-5), pliers are not required. Refer to paragraph 6-60 for tiedown strap installation.

4. Using hose clamp pliers, install hose clamp over nylon cord and lower end of tube assembly and tighten.

5. Lower cable guide over lower hose clamp.

6. Inspect regulator inlet and outlet for foreign objects, dirt, corrosion, bends, dents, cracks, and other damage. Ensure that regulator inlet filter screen is properly installed.

CAUTION

When attaching regulator to oxygen mask assembly, cut and discard cord holding dust cap to regulator housing. Retain dust cap in organizational work center and use only for storage or when regulator has been removed from the oxygen mask assembly for maintenance. Do not allow dust cap to remain on regulator when regulator and mask assembly are joined as a unit.

7. With a push-down, twisting motion, install regulator to the MS27796 connector on end of oxygen mask delivery hose.

NOTE

LOX aircraft only with CRU-79/P and CRU-103/P regulators, refer to paragraph 6-39 for regulator oxygen hose connection.

8. For OBOGS regulators only, thread regulator-to-seat kit hose connection onto regulator nipple adapter coupling hand tight. Using two wrenches, hold inlet fitting at regulator inlet port and tighten oxygen seat kit hose B nut one to two turns maximum until tight.

9. Wrap communication lead around hose to eliminate slack and couple together.

Figure 6-12. Deleted

Figure 6-13. Deleted

6-41. MAINTENANCE.

6-42. Aircrew maintenance of the MBU-23(V)/P series oxygen mask shall be limited to Preflight and Postflight inspections and routine cleaning. All other maintenance actions such as scheduled inspections, in-depth cleaning, and repairs shall be performed by qualified Organizational Maintenance personnel. All maintenance actions shall be documented in accordance with OPNAVINST 4790.2 Series.

6-43. INSPECTION. Inspection of the MBU-23(V)/P series oxygen masks shall consist of Place-In-Service, Preflight, Postflight, and Special inspections.

6-44. Place-In-Service Inspection. Prior to being placed in service the oxygen mask shall be visually inspected in accordance with paragraph 6-47 and cleaned in accordance with paragraph 6-51.

6-45. Preflight/Postflight Inspection. A Preflight/Postflight inspection shall be performed by the crewmembers to whom the oxygen mask and regulator-to-seat kit hose assemblies are assigned prior to and after every flight. The inspections shall be visual inspections in accordance with paragraphs 6-47 and 6-48.

6-46. Special Inspection. Special inspections shall be performed by organizational maintenance prior to placing in service and every 30 days thereafter. The inspection shall consist of visual inspection of the oxygen mask and regulator-to-seat kit assemblies in accordance with paragraphs 6-47 and 6-48, thorough cleaning in accordance with paragraph 6-51, and functional check of the mask assembly in accordance with paragraph 6-49.

6-47. Visual Inspection of Oxygen Mask Assembly. The visual inspection of the oxygen mask assembly shall consist of the following:

1. Oxygen delivery hose for cuts, breaks, dust, and dirt. Replace cut or split delivery tubes, clean dirty delivery tubes in accordance with paragraph 6-51.

2. Inhalation and exhalation valves for fit and seal. Refit valves into seats or replace inhalation or exhalation valves that will not achieve a proper seal.

CAUTION

Do not pull on microphone assembly.

3. Microphone assembly for damage, loose connection, and proper seating. Replace defective microphone assembly.

4. Facepiece assembly for damage and deformation. Replace damaged or deformed facepiece.

5. Communication cable for cuts and split or abraded insulation. Small areas of abrasion may be covered with electrical tape, cut or split insulation may require cable replacement.

6. Offset bayonets for proper operation.

7. Security of hose clamps. Tighten or replace loose hose clamps.

8. Delivery hose tolerance in accordance with paragraph 6-53.

6-48. Visual Inspection of Regulator-To-Seat Kit Hose. The visual inspection of the regulator-to-seat kit hose shall consist of the following:

NOTE

Perform visual inspection on attached oxygen regulator in accordance with NAVAIR 13-1-6.4-2.

1. Hose for damage, wear, fraying, and kinks.

2. Quick disconnects for operation, damage, corrosion, and loose or missing pins.

3. Cleanliness and presence of foreign matter.

4. Housing for damage, discoloration, and wear.

5. Fittings for damaged threads, rounded hexagonal flats, security of attachment to regulator, and corrosion.

6-49. FUNCTIONAL CHECK OF OXYGEN MASK AND REGULATOR-TO-SEAT KIT HOSE. Functional check of the oxygen mask assembly and regulator-to-seat kit hose should be performed using Test Set TTU-489/E in accordance with NAVAIR 17-15BC-22.

6-50. DISASSEMBLY. Disassembly of the MBU-23(V)/P series oxygen mask shall be only to the extent necessary to replace a damaged part or cleaning in accordance with paragraph 6-51. Disassemble mask as follows:

NOTE

Disassembly of the mask is performed after delivery hose has been disconnected from the inhalation valve elbow and from the regulator/connector and the lower end of the strain relief cord has been released. In addition, if disassembly is for cleaning purposes, the upper and lower cable guides with attached communications cable are removed from the delivery hose.

1. Remove microphone assembly.

a. Push red button on U-173/U plug and disconnect plug from the AM-7067A/A amplifier.

CAUTION

Do not twist or turn amplifier while disconnecting.

b. Remove two amplifier attaching screws and gently pull amplifier away from the microphone bracket assembly.

c. Remove microphone bracket with attached microphone element from inside of mask.

2. Remove inhalation valve, exhalation valve, and compensation tube.

a. Remove exhalation valve cover.

b. Unthread inhalation valve elbow from valve and remove from mask pulling attached strain relief cord from delivery hose.

c. Using spanner wrench, remove exhalation valve lockring from valve on outside of mask.

d. Using spanner wrench, remove inhalation valve lockring from valve on outside of mask.

WARNING

Handle delicate compensation tube with care. It is critical to proper operation of the exhalation valve. If any kinks, twists, or other damage to the tube exists, the exhalation valve may not function properly.

e. Remove inhalation valve, exhalation valve, and compensation tube from the mask as one unit by pushing the valves from the outside of the mask through to the inside. The compensation tube is then easily removed from the compensation ports of the inhalation and exhalation valves.

3. Separate facepiece from hardshell.

6-51. CLEANING AND SANITIZING. Cleaning and sanitizing of the MBU-23(V)/P series oxygen masks shall be performed only by authorized Aviation Survival Equipment personnel. Cleaning and sanitizing shall be performed as often as in-service conditions require, but not less than once every 30 days. Masks not on a personal issue basis shall be cleaned and sanitized after every use. Cleaning and sanitizing shall be performed as follows:

Materials Required

Quantity	Description	Reference Number
As Required	Gauze Pads, Absorbent	CCC-G-101
As Required	Bleach, Laundry	O-S-602 NIIN 00-598-7316
As Required	Detergent, General Purpose, Type I	MIL-D-16791 NIIN 00-282-9699
	-or-	
As Required	Soap, Laundry, Low-Filter	P-S-600
As Required	Isopropyl Alcohol	TT-I-735 NIIN 00-286-5435
As Required	SANI-COM 3205	SC3205 (Note 1)

Notes: 1. Open Purchase from:
Celeste Industries Corp
7978 Industrial Park Rd.
Easton, MD 21601
(401) 822-6200

Materials Required (Cont)

Quantity	Description	Reference Number
As Required	Cotton Swabs	6003-0019 NIIN 01-362-5829
As Required	Towelettes	MILP36792 NIIN 00-786-3736

CAUTION

Do not use Methyl Ethyl Ketone (MEK) on or near oxygen mask. The face piece and/or hardshell may craze or crack if it comes in contact with MEK.

1. Disassemble oxygen mask in accordance with paragraph 6-50.

2. Inspect each component in accordance with paragraph 6-47.

3. Prepare preferred cleaning solution.

a. Using General Purpose Detergent, make a 1 percent by weight cleaning solution by adding 1/4 to 1/2 ounce (liquid) detergent to one gallon of water.

CAUTION

When necessary to use a substitute cleaning solution, only the lather from the solution shall be used for cleaning. This prevents undissolved soap particles from getting into the valves.

b. Using a substitute cleaning compound such as Low-Filter Laundry Soap, P-S-600, add approximately 4 tablespoons of soap powder to one gallon of water. Hardness of the water may require use of more soap powder, but the solution must be sufficiently strong to readily form lather when agitated. Make sure all soap is dissolved.

CAUTION

Ensure cleaning solution does not enter inhalation/exhalation valve assemblies.

Use only the lather of a substitute cleaning solution.

4. Moisten a gauze pad with cleaning solution.

a. Clean facepiece inside and out.

b. Use cotton swabs to clean under nose bridge portion of mask.

5. After cleaning mask, thoroughly and repeatedly rinse mask in warm water.

6. After mask is dry, disinfect with a solution of 1/3 cup of liquid bleach per gallon of water using gauze pads or other lint-free wipes. Ensure disinfectant reaches inner crevices of face form. Rinse with clean water and air dry.

WARNING

Isopropyl alcohol is flammable. Keep away from heat, sparks, and open flame. Avoid prolonged breathing of vapors. Keep container closed.

7. Clean inhalation and exhalation valves using isopropyl alcohol.

a. Use clean small container large enough to submerge valve assembly.

b. Fill container half full with isopropyl alcohol.

CAUTION

Do not submerge unprotected oxygen (inhalation) valve.

Do not probe any portion of the valve.

Do not allow isopropyl alcohol to enter compensation tube port(s), it may cause malfunction of exhalation valve.

c. With inhalation and exhalation valves still connected to the compensation tube, cover the compensation inlet hole of the inhalation valve (figure 6-14) tightly with finger and submerge valves, washers, and lockrings in isopropyl alcohol. Using gauze pad or other lint-free cloth, wipe washers, lockrings, and valve threads clean.

d. Using cotton swab saturated with isopropyl alcohol, remove stubborn residue from inhalation valve. Lightly rub exhalation valve seat. Depress poppet and clean between poppet and seat.

e. Gently shake excess alcohol from inhalation and exhalation valves and allow to air dry.

8. Wash delivery hose and PGB supply hose in clean isopropyl alcohol. Rinse in clean clear water and allow to air dry.

6-51A. SANITIZING NON-PERSONAL ISSUE MASKS. Masks not on a personal issue basis shall be sanitized after each use as follows:

Materials Required

Quantity	Description	Reference Number
As Required	Bleach, Laundry	O-S-602 NIIN 00-598-7316

1. Prepare a sanitizing solution by mixing 1/3 cup of liquid bleach with 1 gallon of water.

2. Moisten a gauze pad with bleach solution and squeeze to prevent dripping. Wipe interior of mask, exclusive of valves and microphone, ensuring that sanitizing solution penetrates all crevices.

3. Wipe interior dry with a clean, lint-free cloth. Ensure all sanitizing solution is dried from mask interior.

6-52. ASSEMBLY. Assemble the MBU-23(V)/P series oxygen mask and perform functional test of microphone assembly. For best results, the test should be performed using test set TTU-489/E in accordance with NAVAIR 17-15BC-22. The TTU-489/E is presently the only test unit which can perform this test. If test set is not available, use standard shop procedures to test the microphone assembly.

WARNING

The delicate compensation tube is critical to the function of the exhalation valve. If improperly installed with kinks, twists, or other damage, the compensation tube may malfunction.

Cross threading could give the false indication that inhalation valve has been properly tightened and could separate during flight.

NOTE

Ensure inhalation and exhalation valves are reinstalled in their proper positions. Viewing the interior of the facepiece, the inhalation valve should be installed on the left and the exhalation valve on the right.

The soft rubber of the facepiece serves as a gasket for sealing the valves in place. Ensure facepiece material is not pinched between threads and hardshell.

6-53. OXYGEN MASK DELIVERY HOSE TOLERANCE. Check delivery hose tolerance by grasping delivery hose by each end and extending hose to full extension permitted by the installed strain relief cord. The length of the extended hose shall not exceed tolerance of 1 inch beyond normal extension. If adjustment is necessary to bring hose within required tolerance, proceed as follows.

1. Remove tiedown strap securing delivery hose to oxygen regulator.

a. Using diagonal cut pliers cut the head of tiedown strap in half laterally from above. Do not attempt to cut under tiedown strap head (see figure 6-15).

b. Separate delivery hose from oxygen regulator.

NOTE

Separating delivery hose from regulator also releases lower end of strain relief cord.

2. Holding strain relief cord as it extends from end of delivery hose, grasp delivery hose at each end and extend hose to its normal length. Hold the cord in place and mark cord where it exits from the end of the hose.

a. Fold exposed relief cord back over the delivery hose and install regulator on end of hose. Ensure marked position on cord is still at exit point from hose.

b. Install tiedown strap, or hose clamp, over cord and lower end of hose assembly.

c. Check cord length and tolerance. Cut off excess cord so no more than 1/2 inch extends beyond tiedown strap/clamp.

6-54. REPAIR/REPLACEMENT. Repair of the MBU-23(V)/P series oxygen masks shall be limited to replacement of defective parts. Any holes or tears in any part of the facepiece or delivery hose shall be cause for rejection of that component.

6-55. Facepiece/Hardshell Retaining Strap Assembly Replacement. Refer to paragraph 6-50 for details of disassembly.

Materials Required

Quantity	Description	Reference Number
As Required	Thread, Nylon, Size E	V-T-295

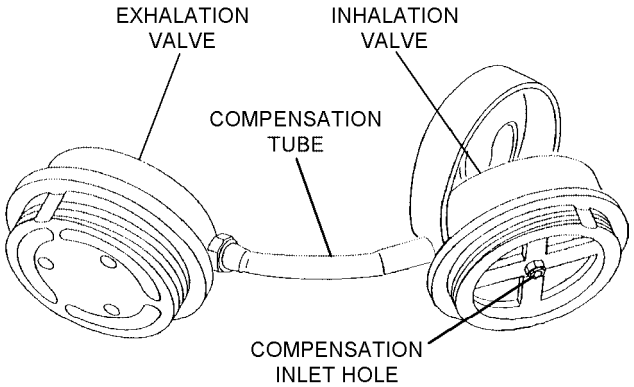

6-14

Figure 6-14. Cleaning Inhalation/Exhalation Valves

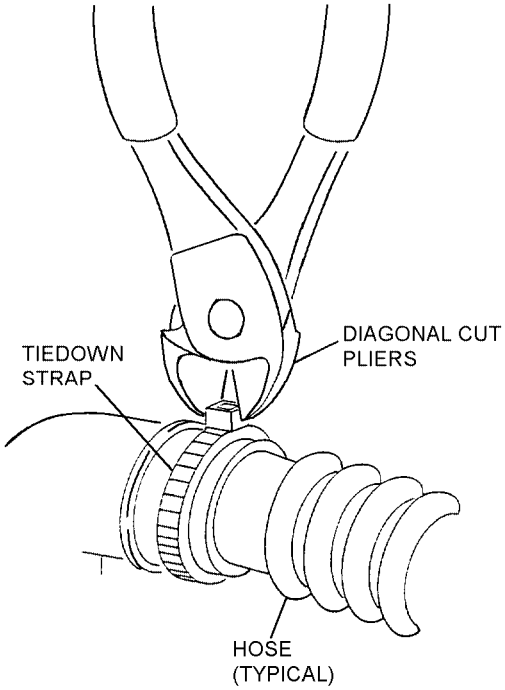

6-15

Figure 6-15. Tiedown Strap Removal

1. Disassemble mask in accordance with paragraph 6-50.

a. Remove microphone bracket with attached microphone element.

b. Remove inhalation valve, exhalation valve, and compensation tube assembly.

c. Remove facepiece from hardshell.

2. Cut tacking, if installed, on retaining straps.

3. Remove retaining straps from buckles, facepiece, and both bayonets.

4. Remove bayonets.

5. Cut replacement retaining straps to size.

6. Thread straps through bayonets, facepiece, and retaining buckles.

7. Reinstall facepiece in hardshell.

8. Reinstall inhalation valve, exhalation valve, and compensation tube assembly into facepiece as a unit.

9. Reinstall microphone bracket with attached microphone element.

10. Perform functional test of microphone assembly.

NOTE

For best results, the functional test should be performed using TTU-489/E Test Set in accordance with NAVAIR 17-15BC-22. The TTU-489/E test set is presently the only test set available which can perform this test. If test set is not available, use standard shop procedures to functionally test the microphone assembly.

11. Perform fit check in accordance with paragraph 6-25.

12. If desired by crewmembers, buckles may be tacked to retaining straps using two turns of size E nylon thread doubled. Tie with surgeons knot and secure with square knot.

6-56. Microphone Assembly Replacement. Refer to paragraph 6-50 for details of disassembly and proceed as follows:

1. Push red button on U-173/U plug and disconnect plug from AM-7067A/A amplifier.

CAUTION

Do not twist or turn amplifier while separating it from the microphone bracket.

2. Remove two screws attaching amplifier to microphone bracket and carefully separate amplifier from bracket by pulling straight back on amplifier. Remove amplifier and set aside.

3. Remove microphone bracket with attached microphone element from inside mask.

NOTE

Aircrewmembers may experience a slight electrical shock when the face or lips touch the microphone set screws. In these cases, install the microphone backwards such that the set screws face away from the mouth. The microphone should perform satisfactorily when speaking into either side.

4. Loosen and remove the two screws securing the microphone element to the bracket assembly.

a. Dislodge RTV sealant, from the heads of the two set screws, if applied, loosen set screws and remove defective microphone element from bracket connector posts.

b. Install replacement microphone element onto bracket connector posts and secure in place using two screws removed during step 4.

c. Tighten set screws and apply RTV sealant over the screw heads.

5. Place amplifier in position on outside of mask, gently press amplifier connector pins through holes in facepiece and into microphone bracket receptacle. Secure amplifier to microphone bracket using two attaching screws removed in step 2. Do not overtighten screws.

6. Insert U-173/U plug into amplifier and ensure red locking button engages.

7. Perform functional test of microphone assembly.

8. Document in accordance with OPNAVINST 4790.2 Series.

NOTE

For best results the functional test should be performed using TTU-489/E test set in accordance with NAVAIR 17-15BC-22. The TTU-489/E is presently the only test set available which can perform required test. If test set is not available, use standard shop procedures to test the microphone assembly.

6-57. Inhalation Valve, Exhalation Valve, and Compensation Tube Replacement

Refer to Figure 6-18, for component reference and paragraph 6-50 for details of disassembly and proceed as follows:

Materials Required

Quantity	Description	Reference Number
1	Valve Assembly, Inhalation	P/N G001-1077-01
	-or-	
1	Valve Assembly, Inhalation	P/N G010-1050-03
1	Valve Assembly, Exhalation	P/N G001-1010-03
1	Tube, Compensation	P/N G010-1058-01

1. Push red button on U-173/U plug and disconnect plug from amplifier.

2. Remove exhalation valve cover.

3. Unthread and remove inhalation valve elbow from mask.

4. Using spanner wrench, remove exhalation valve lockring from outside of mask.

5. Using spanner wrench, remove inhalation valve lockring from outside of mask.

6. Remove inhalation valve, exhalation valve, and compensation tube from mask as a unit by carefully pushing valves through to inside of mask.

CAUTION

Remove compensation tube carefully to avoid damage to tube.

NOTE

The following step is to be performed only if the compensation tube is to be replaced.

7. Carefully pull compensation tube from exhalation and inhalation valve ports. Do not twist tube. Retain tube for reinstallation or to aid in preparation of new compensation tube.

8. Prepare new compensation, as required, using old tube as a guide.

a. Trim non-flared end of new tube to same length as old tube.

b. If old tube is not usable as guide, cut new tube to 1 3/16 inch for wide mask, 7/8 inch for medium narrow mask, and 11/16 inch for small narrow mask.

WARNING

The delicate compensation tube is critical to the proper operation of the exhalation valve. Any twists, kinks, or other damage could cause the exhalation valve to malfunction.

9. Reinstall compensation tube to exhalation valve and exhalation valves.

a. Carefully install compensation tube on exhalation valve compensation tube port, ensure no twists or kinks result.

b. Carefully install compensation tube on inhalation valve compensation tube port, ensure no twists or kinks result.

CAUTION

Ensure inhalation and exhalation valves are installed in correct positions. Viewing inside of mask, the inhalation valve is on the left and the exhalation valve is on the right.

NOTE

The soft rubber material of the facepiece serves as gasket for sealing valves in place. Ensure no facepiece material is pinched between threads and hardshell.

10. Ensure holes in facepiece and hardshell are aligned; carefully align keyways and insert threaded portion of inhalation and exhalation valves through mask from inside.

11. Ensure there are no twists or kinks in the compensation tube as installed. If necessary retrim the compensation tube and return to step 9 above.

12. Reinstall exhalation valve lockring on outside of mask with flat side of lockring to outside. Hands tighten using spanner wrench.

13. Reinstall and hand tighten inhalation valve lockring on outside of mask using spanner wrench.

14. Reinstall exhalation valve cover over flat of lockring with openings in cover oriented downward.

WARNING

Cross threading may give false impression that inhalation valve elbow is properly installed and tightened. Elbow could become loosened and separate during flight if not properly installed.

15. Install washer and carefully thread inhalation valve elbow onto inhalation valve.

16. Connect U-173/U plug to AM-7067A/A amplifier. Check to make sure red locking button is engaged.

NOTE

For best results the functional test should be performed using TTU-489/E test set in accordance with NAVAIR 17-15BC-22. The TTU-489/E is presently the only test set available to perform the required test. If test set is not available, use standard shop procedures to test microphone assembly.

17. Perform functional test of microphone assembly.

6-58. Oxygen Delivery Hose Replacement. Disconnect oxygen delivery hose from regulator. Refer to paragraph 6-50 for details of disassembly and proceed as follows:

Materials Required

Quantity	Description	Reference Number
As Required	Strap, Tiedown, Electrical	MR-1-0 (CAGE 96303) NIIN 00-984-6382
As Required	Strap, Tiedown, Electrical	MR-4-0 (CAGE 96303) NIIN 00-903-2284
1	Hose, Oxygen Delivery	P/N G010-1025-01
As Required	Clamp, Adjustable	P/N MS22064-5
	-or-	
As Required	Clamp, Adjustable	P/N 450-134A
As Required	Strap, Tiedown Electrical	P/N MS3367-1-0 NIIN 00-984-6582

1. Press red button on U-173/U plug and disconnect plug from amplifier.

2. Unthread inhalation valve elbow from mask.

3. Remove hose clamps or tiedown straps from upper and lower ends of delivery hose.

a. Remove hose clamps using hose clamp pliers and a small screwdriver.

b. To remove tiedown straps, refer to figure 6-15 and use diagonal cut pliers.

4. Separate delivery hose from inhalation valve elbow and lower connector/regulator. Disconnect strain relief cord from the connector and slide delivery hose down over free end of strain relief cord.

5. Remove upper and lower cable guides, with communications cable attached, from delivery hose.

a. Remove upper and lower hose clamps using hose clamp pliers and small screwdriver. If installed, discard two locking position hose clamps.

b. To remove tiedown straps, refer to figure 6-15 and use diagonal cut pliers.

6. Uncoil communications cable from around delivery hose.

7. If necessary, replace strain relief cord and attach replacement cord to inhalation valve connector pin with a larks' head knot.

8. Coil communications cable around delivery hose and slide upper and lower cable guides, with attached communications cable, onto delivery hose.

a. Position top end of delivery hose on inhalation valve elbow.

b. On lower end of delivery hose install regulator and strain relief cord in accordance with paragraph 6-53.

9. Insert free end of strain relief cord through upper end of replacement delivery hose.

a. Slide upper end of delivery hose over inhalation valve elbow.

b. Attach free end of strain relief cord to connector in accordance with paragraph 6-38 or if attaching regulator in accordance with paragraph 6-39.

WARNING

Do not reuse two locking position hose clamps.

10. Install upper and lower hose clamps using hose clamp pliers, or install tiedown straps using tensioning tool adjusted to setting 3.

11. Insert U-173/U connector pins into amplifier and ensure red locking button engages.

12. Document in accordance with OPNAVINST 4790.2 Series.

6-59. Communication Cable CX-13126A/A Replacement. To replace the CX-13126A/A communications cable, proceed as follows:

Materials Required

Quantity	Description	Reference Number
1	Cable Assembly, CX-13126A/A	P/N M22442/26-3 NIIN 01-209-3117

1. Push red button on U-173/U plug and disconnect plug from amplifier.

2. Remove nub of cable yoke assembly from upper cable guide.

3. Uncoil communication cable from around delivery hose.

4. Expand lower cable guide, using elastrator tool and remove upper portion of communication cable through lower cable guide.

5. Using an elastrator tool, expand lower cable guide and insert upper portion of replacement communications cable through expanded cable guide.

6. Coil cable around delivery hose.

7. Insert nub of cable yoke assembly through upper cable guide using an elastrator tool.

8. Insert U-173/U plug connector pins into amplifier and ensure red locking button engages.

9. Document in accordance with OPNAVINST 4790.2 Series.

6-60. INSTALLATION OF ELECTRICAL TIEDOWN STRAPS (OPTIONAL). If use of tiedown straps instead of hose clamps is desired, proceed as follows:

Materials Required

Quantity	Description	Reference Number
1	Installation Tool	MS90387-1 (CAGE 28210) NIIN 00-781-7894
As Required	Strap, Tiedown, Electrical	MS3367-1-0 NIIN 00-984-6352

NOTE

Ensure tiedown strap tool has been lubricated with oxygen safe lubricant. List of safe lubricants can be found in NAVAIR 13-1-6.4-2, Chapter 3.

1. Install tiedown strap around delivery hose at desired location (upper and lower hose attachment points) with ribbed portion of tiedown strap inboard.

CAUTION

Ensure bottom end of oxygen delivery hose is flush against upper surface of connector or regulator to ensure proper seating of raised lip of connector/regulator coupling into mating groove of delivery hose. (Mating groove of hose is located on interior surface of each end of delivery hose).

2. Thread tip of tiedown strap, from left to right through eye of strap boss. Cinch strap snugly around oxygen delivery hose at inhalation valve elbow or regulator connection.

3. Set tension selector knob for width of tiedown strap being installed.

NOTE

The correct setting for installation tool P/N MS390387 is standard (STD) when installing tiedown strap P/N MS3367-1-0. The setting is read from the bottom of the tension strap knob on the handle of the tool.

4. Pass free end of tiedown strap through the slotted end of the tool, keeping open side of slot to users left. Push tip of tool snugly against strap boss.

5. With installation tool properly positioned, pull trigger. The tool will tighten the tiedown strap and automatically sever excess strap at preset location.

6-61. FABRICATION OF INHALATION/EXHALATION SPANNER WRENCH. Fabricate spanner wrench using 2024T3 Aluminum Alloy Tubing in accordance with figure 6-16.

6-61A. FABRICATION AND INSTALLATION OF OXYGEN MASK SECURING FASTENER. To provide a means of fastening the oxygen mask to the PCU-33/P series and PCU-56/P series torso harnesses to secure and protect the mask from accidental exposure to contamination, proceed as follows:

Materials Required

Quantity	Description	Reference Number
1	Button, Snap Fastener	MS27980-1B NIIN 00-359-6844
1	Socket, Snap Fastener	MS27980-6B NIIN 00-285-6250
1	Chuck, Socket	P/N 1410 NIIN 00-144-2084
1	Die, Button	P/N 1401 NIIN 00-090-4412
1	Snap Setter	P/N A741 NIIN 00-880-0619
1	Punch, Cutting Revolving	MIL-P-2001 NIIN 00-596-9604

1. With the oxygen mask properly fit and adjusted, there is a minimum of 1 and 1/2 inches of retention harness webbing remaining.

2. On the lower left retention harness strap, measure, toward the adjustment buckle, 3/4 of an inch from the sear cut end of the retention harness webbing and place a mark at the center of the webbing.

3. At the marked location, using a revolving punch, make a hole slightly smaller than the diameter of the shaft of the snap fastener button.

4. Assemble snap fastener button and socket onto retention harness with the button outboard, install onto harness webbing with a snap setter.

6-62. ILLUSTRATED PARTS BREAKDOWN.

6-63. This section lists and illustrates the assemblies and detail parts of the MBU-23(V)/P Series Oxygen Masks.

6-64. The Illustrated Parts Breakdown (IPB) is intended for use in identification, procurement, storing, and issuing of replacement parts. It also illustrates disassembly and assembly relationships. Installation, operation, and maintenance of the equipment detailed herein shall be performed only by authorized personnel using the instructions set forth in the preceding sections.

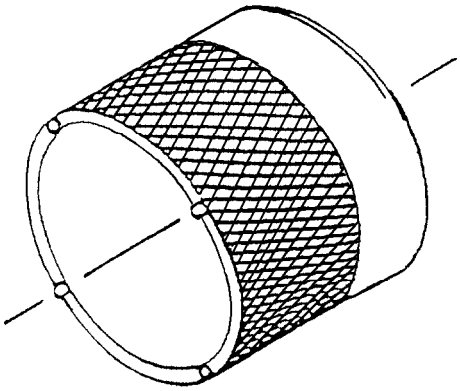

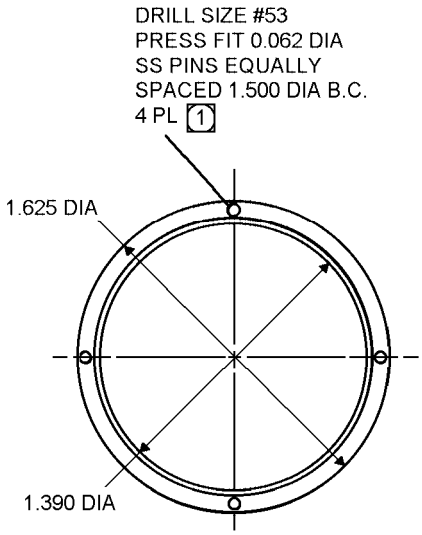

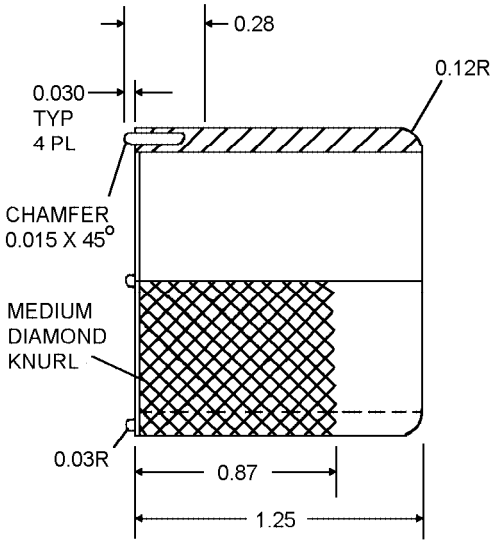

1 PINS (MS16555-601)

DIMENSIONS: 1.25 IN L X 1 5/8 IN DIA
(LINEAR DIMENSIONS ARE IN INCHES)

MAKE FROM: 2024T3 ALUMINUM ALLOY

TOLERANCES

FRACTIONS	DECIMALS	ANGLE
+/- 1/32	+/- 0.01 +/- 0.005	+/- 1°

6-16

Figure 6-16. Fabrication of Spanner Wrench

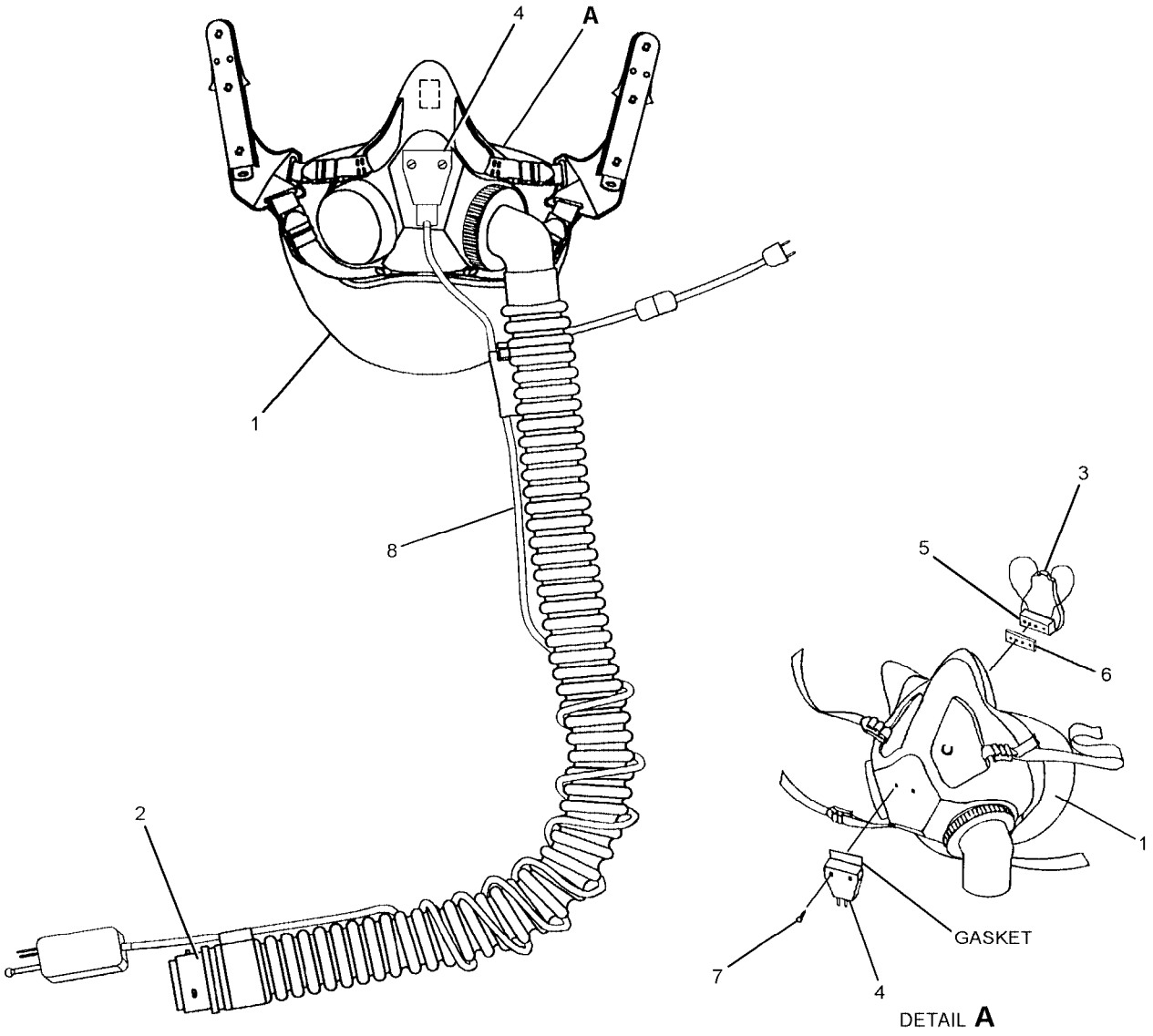

6-17

Figure 6-17. MBU-23(V)2/P Oxygen Mask Assembly Components

Figure and Index Number	Part Number	Description 1 2 3 4 5 6 7	Units Per Assembly	Usable On Code
6-17	No Number	MBU-23(V)2/P OXYGEN MASK ASSEMBLY, ... Small narrow	REF	A
	No Number	MBU-23(V)2/P OXYGEN MASK ASSEMBLY, ... Medium narrow	REF	B
	No Number	MBU-23(V)2/P OXYGEN MASK ASSEMBLY, ... Medium wide	REF	C
	No Number	MBU-23(V)2/P OXYGEN MASK ASSEMBLY, ... Large wide	REF	D
-1	G010-1314-21	. MBU-23(V)1/P OXYGEN MASK ..... ASSEMBLY, Small narrow (See figure 6-23 for breakdown)	REF	A
	G010-1314-22	. MBU-23(V)1/P OXYGEN MASK ..... ASSEMBLY, Medium narrow (See figure 6-23 for breakdown)	REF	B
	G010-1314-23	. MBU-23(V)1/P OXYGEN MASK ..... ASSEMBLY, Medium wide (See figure 6-23 for breakdown)	REF	C
	G010-1314-24	. MBU-23(V)1/P OXYGEN MASK ..... ASSEMBLY, Large wide (See figure 6-23 for breakdown)	REF	D
-2	MS27796	. CONNECTOR	1	
-3	MIL-M-26542/4	. MICROPHONE, M-101/AIC	1	
-4	M23595/3-3	. AMPLIFIER ASSEMBLY, AM-7067A/A	1	
-5	G012-1076-01	. ADAPTER, M-101/AIC	1	
-6	G012-1141-01	. GASKET	1	
-7	AN500D2-5	. SCREW	2	
-8	M22442/26-3	. CABLE, Communications, CX-13126A/A	1	

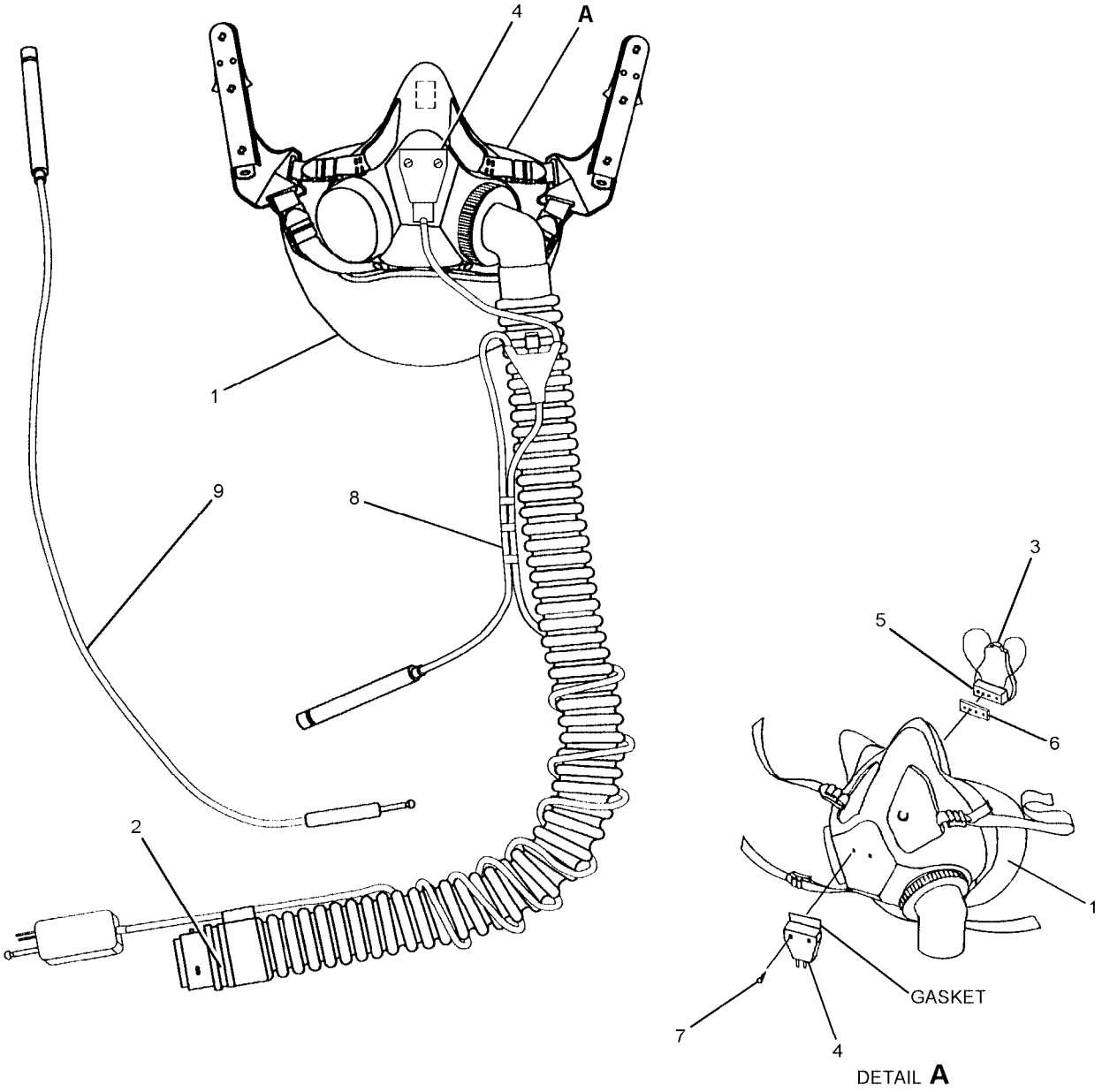

6-18

Figure 6-18. MBU-23(V)3/P Oxygen Mask Assembly Components

Figure and Index Number	Part Number	Description 1 2 3 4 5 6 7	Units Per Assembly	Usable On Code
6-18	No Number	MBU-23(V)3/P OXYGEN MASK ASSEMBLY, ... Small narrow	REF	A
	No Number	MBU-23(V)3/P OXYGEN MASK ASSEMBLY, ... Medium narrow	REF	B
	No Number	MBU-23(V)3/P OXYGEN MASK ASSEMBLY, ... Medium wide	REF	C
	No Number	MBU-23(V)3/P OXYGEN MASK ASSEMBLY, ... Large wide	REF	D
-1	G010-1314-21	. MBU-23(V)1/P OXYGEN MASK ..... SUBASSEMBLY, Small narrow (See figure 6-23 for breakdown)	REF	A
	G010-1314-22	. MBU-23(V)1/P OXYGEN MASK ..... SUBASSEMBLY, Medium narrow (See figure 6-23 for breakdown)	REF	B
	G010-1314-23	. MBU-23(V)1/P OXYGEN MASK ..... SUBASSEMBLY, Medium wide (See figure 6-23 for breakdown)	REF	C
	G010-1314-24	. MBU-23(V)1/P OXYGEN MASK ..... SUBASSEMBLY, Large wide (See figure 6-23 for breakdown)	REF	D
-2	MS27796	. CONNECTOR	1	
-3	MIL-M-26542/4	. MICROPHONE, M-101/AIC	1	
-4	M23595/3-3	. AMPLIFIER ASSEMBLY, AM-7067A/A	1	
-5	G012-1076-01	. ADAPTER, M-101/AIC	1	
-6	G012-1141-01	. GASKET	1	
-7	AN500D2-5	. SCREW	2	
-8	M22442/42-1	. CABLE, Communication, CX-13127/A	1	
-9	M22442/24-1	. CABLE, Communication, CX-13017/A	1	

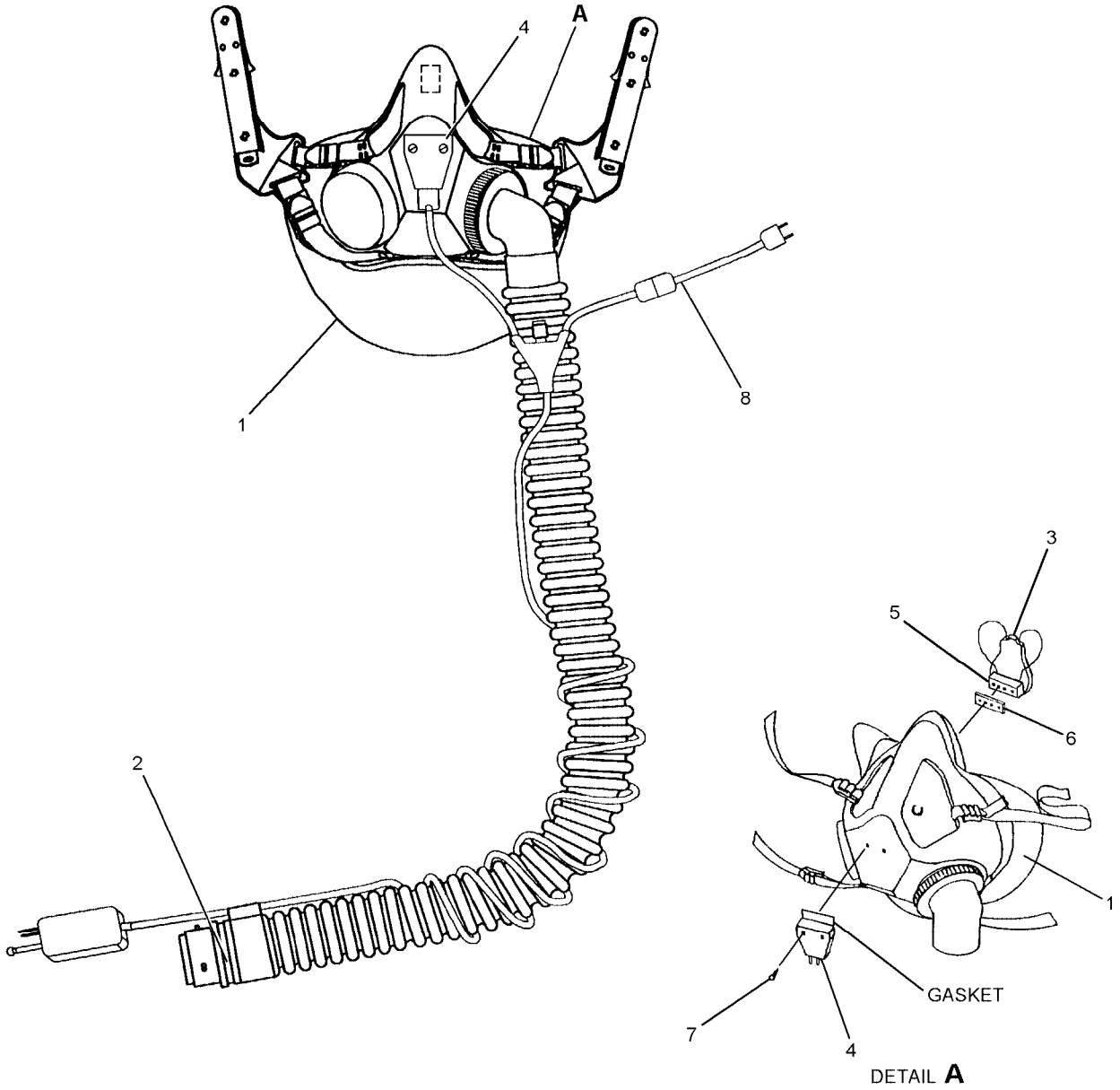

6-19

Figure 6-19. MBU-23(V)4/P Oxygen Mask Assembly Components

Figure and Index Number	Part Number	Description 1 2 3 4 5 6 7	Units Per Assembly	Usable On Code
6-19	No Number	MBU-23(V)4/P OXYGEN MASK ASSEMBLY, ... Small narrow	REF	A
	No Number	MBU-23(V)4/P OXYGEN MASK ASSEMBLY, ... Medium narrow	REF	B
	No Number	MBU-23(V)4/P OXYGEN MASK ASSEMBLY, ... Medium wide	REF	C
	No Number	MBU-23(V)4/P OXYGEN MASK ASSEMBLY, ... Large wide	REF	D
-1	G010-1314-21	. MBU-23(V)1/P OXYGEN MASK ..... SUBASSEMBLY, Small narrow (See figure 6-23 for breakdown)	REF	A
	G010-1314-22	. MBU-23(V)1/P OXYGEN MASK ..... SUBASSEMBLY, Medium narrow (See figure 6-23 for breakdown)	REF	B
	G010-1314-23	. MBU-23(V)1/P OXYGEN MASK ..... SUBASSEMBLY, Medium wide (See figure 6-23 for breakdown)	REF	C
	G010-1314-24	. MBU-23(V)1/P OXYGEN MASK ..... SUBASSEMBLY, Large wide (See figure 6-23 for breakdown)	REF	D
-2	MS27796	. CONNECTOR	1	
-3	MIL-M-26542/4	. MICROPHONE, M-101/AIC	1	
-4	M23595/3-3	. AMPLIFIER ASSEMBLY, AM-7067A/A	1	
-5	G012-1076-01	. ADAPTER, M-101/AIC	1	
-6	G012-1141-01	. GASKET	1	
-7	AN500D2-5	. SCREW	2	
-8	M22442/26-3	. CABLE, Communication, CX-13126A/A	1	

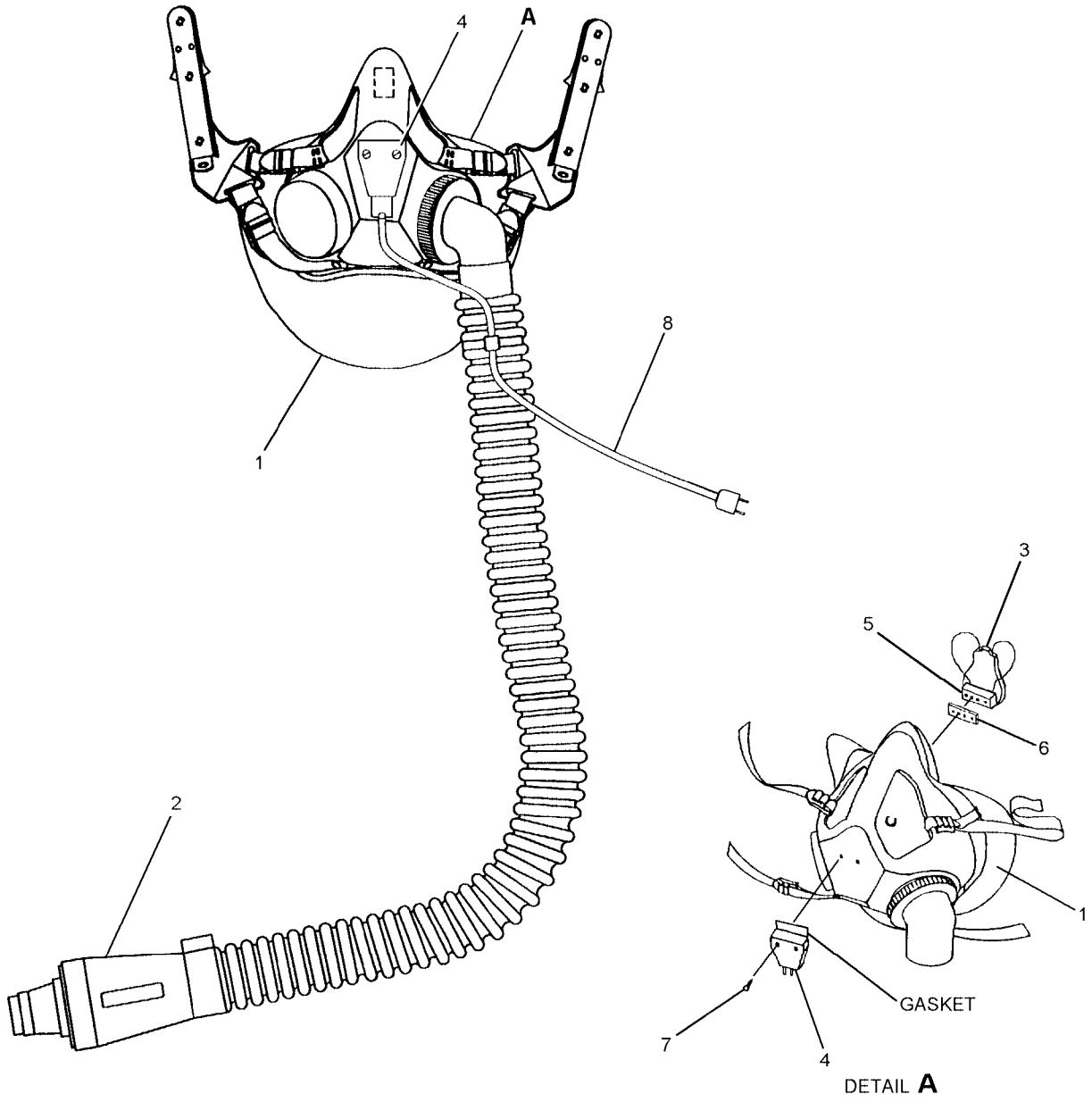

6-20

Figure 6-20. MBU-23(V)5/P Oxygen Mask Assembly Components

Figure and Index Number	Part Number	Description 1 2 3 4 5 6 7	Units Per Assembly	Usable On Code
6-20	No Number	MBU-23(V)5/P OXYGEN MASK ASSEMBLY, ... Small narrow	REF	A
	No Number	MBU-23(V)5/P OXYGEN MASK ASSEMBLY, ... Medium narrow	REF	B
	No Number	MBU-23(V)5/P OXYGEN MASK ASSEMBLY, ... Medium wide	REF	C
	No Number	MBU-23(V)5/P OXYGEN MASK ASSEMBLY, ... Large wide	REF	D
-1	G010-1314-21	. MBU-23(V)1/P OXYGEN MASK ..... SUBASSEMBLY, Small narrow (See figure 6-23 for breakdown)	REF	A
	G010-1314-22	. MBU-23(V)1/P OXYGEN MASK ..... SUBASSEMBLY, Medium narrow (See figure 6-23 for breakdown)	REF	B
	G010-1314-23	. MBU-23(V)1/P OXYGEN MASK ..... SUBASSEMBLY, Medium wide (See figure 6-23 for breakdown)	REF	C
	G010-1314-24	. MBU-23(V)1/P OXYGEN MASK ..... SUBASSEMBLY, Large wide (See figure 6-23 for breakdown)	REF	D
-2	MS22016-1	. CONNECTOR, MC-3A	1	
-3	MIL-M-26542/4	. MICROPHONE, M-101/AIC	1	
-4	M23595/3-3	. AMPLIFIER ASSEMBLY, AM-7067A/A	1	
-5	G012-1076-01	. ADAPTER, M-101/AIC	1	
-6	G012-1141-01	. GASKET	1	
-7	AN500D2-5	. SCREW	2	
-8	765AS380-1	. CABLE, Communication, CX-13154/A	1	

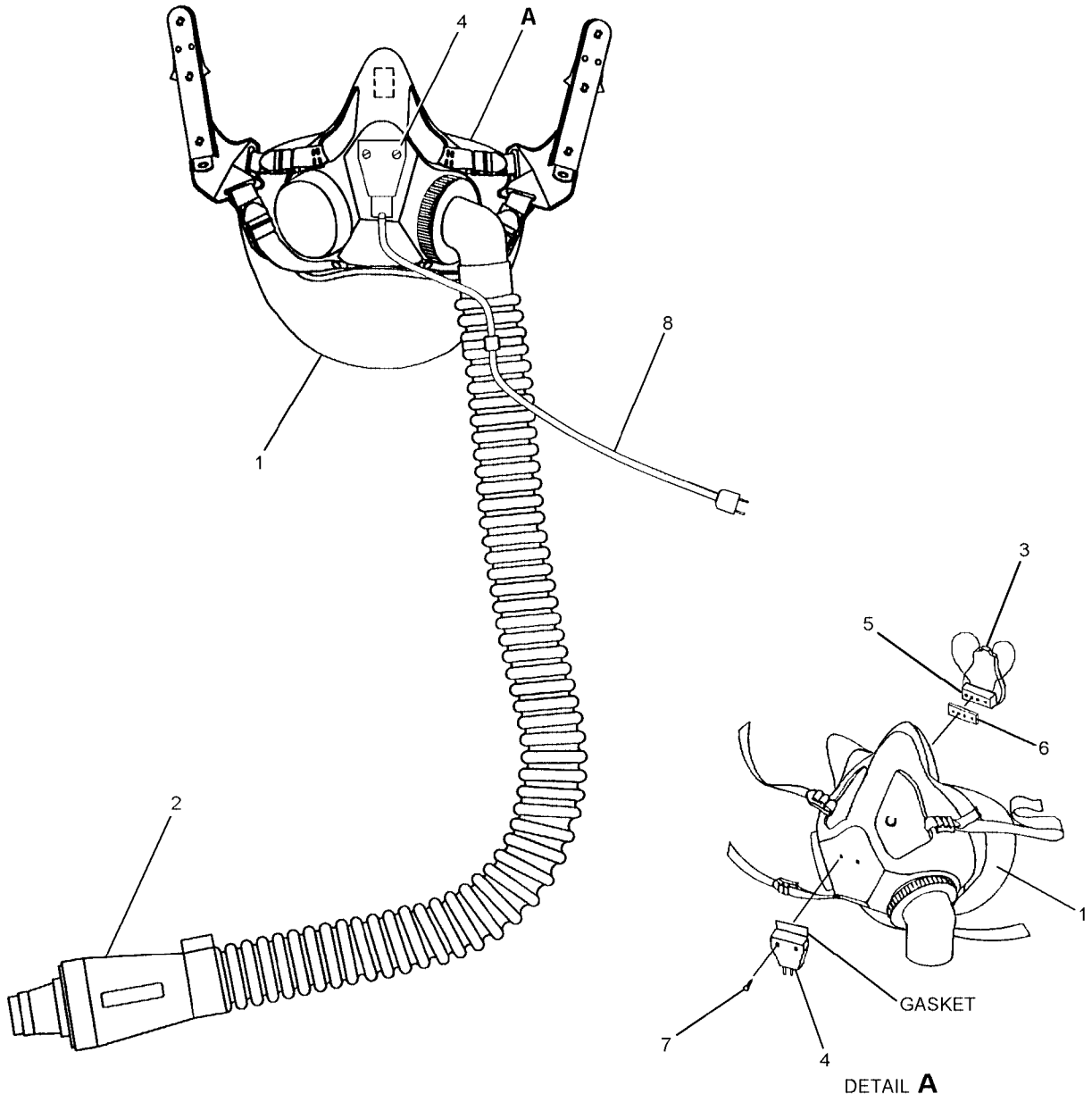

6-21

Figure 6-21. MBU-23(V)6/P Oxygen Mask Assembly Components

Figure and Index Number	Part Number	Description 1 2 3 4 5 6 7	Units Per Assembly	Usable On Code
6-21	No Number	MBU-23(V)6/P OXYGEN MASK ASSEMBLY, ... Small narrow	REF	A
	No Number	MBU-23(V)6/P OXYGEN MASK ASSEMBLY, ... Medium narrow	REF	B
	No Number	MBU-23(V)6/P OXYGEN MASK ASSEMBLY, ... Medium wide	REF	C
	No Number	MBU-23(V)6/P OXYGEN MASK ASSEMBLY, ... Large wide	REF	D
-1	G010-1314-21	. MBU-23(V)1/P OXYGEN MASK ..... SUBASSEMBLY, Small narrow (See figure 6-23 for breakdown)	REF	A
	G010-1314-22	. MBU-23(V)1/P OXYGEN MASK ..... SUBASSEMBLY, Medium narrow (See figure 6-23 for breakdown)	REF	B
	G010-1314-23	. MBU-23(V)1/P OXYGEN MASK ..... SUBASSEMBLY, Medium wide (See figure 6-23 for breakdown)	REF	C
	G010-1314-24	. MBU-23(V)1/P OXYGEN MASK ..... SUBASSEMBLY, Large wide (See figure 6-23 for breakdown)	REF	D
-2	MS22016-1	. CONNECTOR, MC-3A	1	
-3	MIL-M-26542/4	. MICROPHONE, M-101/AIC	1	
-4	No Number	. RECEPTACLE	1	
-5	G012-1076-01	. ADAPTER, M-101/AIC	1	
-6	G012-1141-01	. GASKET	1	
-7	AN500D2-5	. SCREW	2	
-8	765AS380-1	. CABLE, Communication, CX-13154/A	1	
-9	57C12661-1-2-1-4	. CABLE, Communication, CX-4434U/16 IN	1	

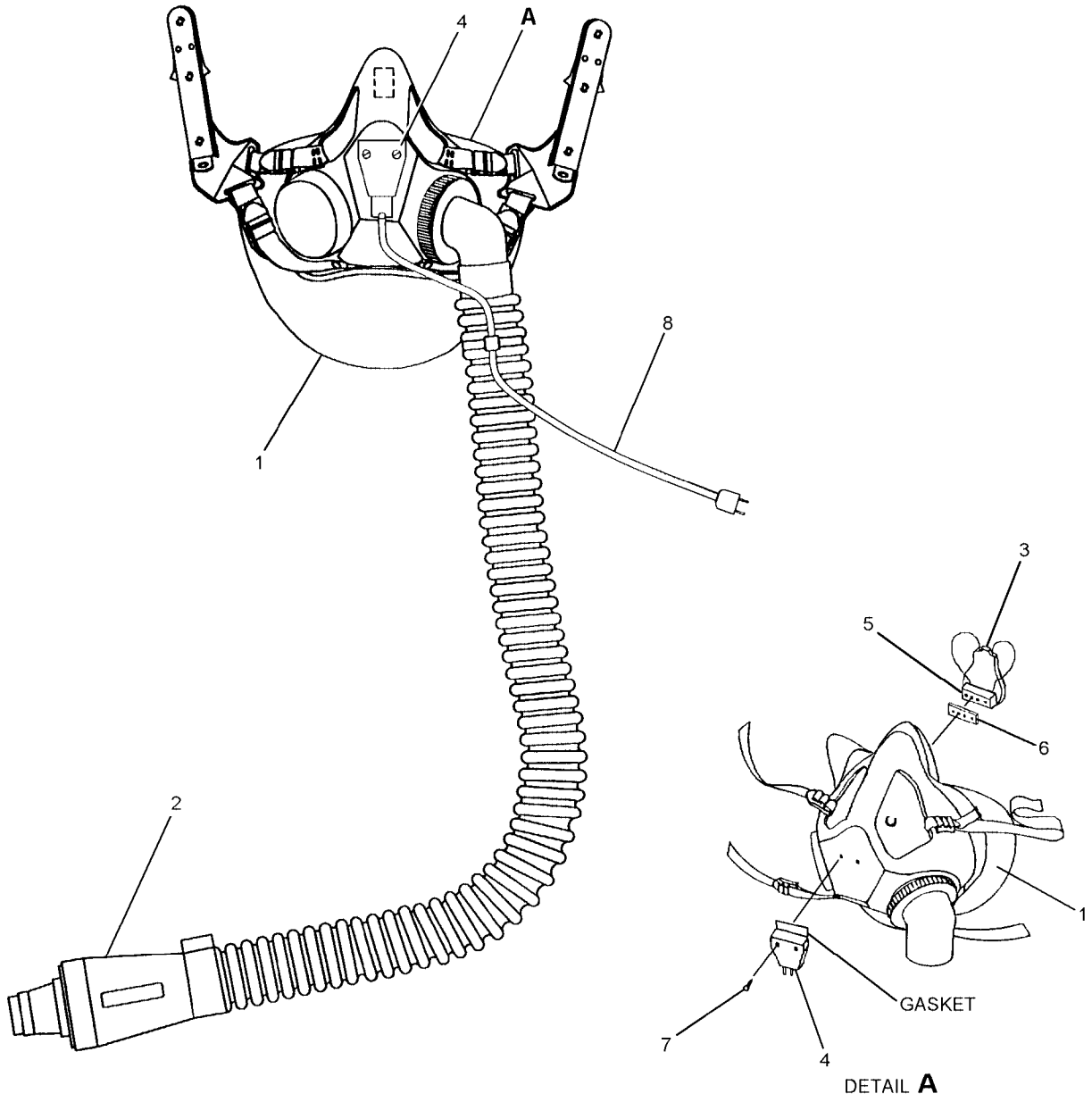

6-22

Figure 6-22. MBU-23(V)7/P Oxygen Mask Assembly Components

Figure and Index Number	Part Number	Description 1 2 3 4 5 6 7	Units Per Assembly	Usable On Code
6-22	No Number	MBU-23(V)7/P OXYGEN MASK ASSEMBLY, ... Small narrow	REF	A
	No Number	MBU-23(V)7/P OXYGEN MASK ASSEMBLY, ... Medium narrow	REF	B
	No Number	MBU-23(V)7/P OXYGEN MASK ASSEMBLY, ... Medium wide	REF	C
	No Number	MBU-23(V)7/P OXYGEN MASK ASSEMBLY, ... Large wide	REF	D
-1	G010-1314-21	. MBU-23(V)1/P OXYGEN MASK ..... SUBASSEMBLY, Small narrow (See figure 6-23 for breakdown)	REF	A
	G010-1314-22	. MBU-23(V)1/P OXYGEN MASK ..... SUBASSEMBLY, Medium narrow (See figure 6-23 for breakdown)	REF	B
	G010-1314-23	. MBU-23(V)1/P OXYGEN MASK ..... SUBASSEMBLY, Medium wide (See figure 6-23 for breakdown)	REF	C
	G010-1314-24	. MBU-23(V)1/P OXYGEN MASK ..... SUBASSEMBLY, Large wide (See figure 6-23 for breakdown)	REF	D
-2	123AB50534-5	. CONNECTOR, CRK-90	1	
-3	MIL-M-26542/4	. MICROPHONE, M-101/AIC	1	
-4	M23595/3-3	. AMPLIFIER ASSEMBLY, AM-7067A/A	1	
-5	G012-1076-01	. ADAPTER, M-101/AIC	1	
-6	G012-1141-01	. GASKET	1	
-7	AN500D2-5	. SCREW	2	
-8	765AS380-1	. CABLE, Communication, CX-13154/A	1	

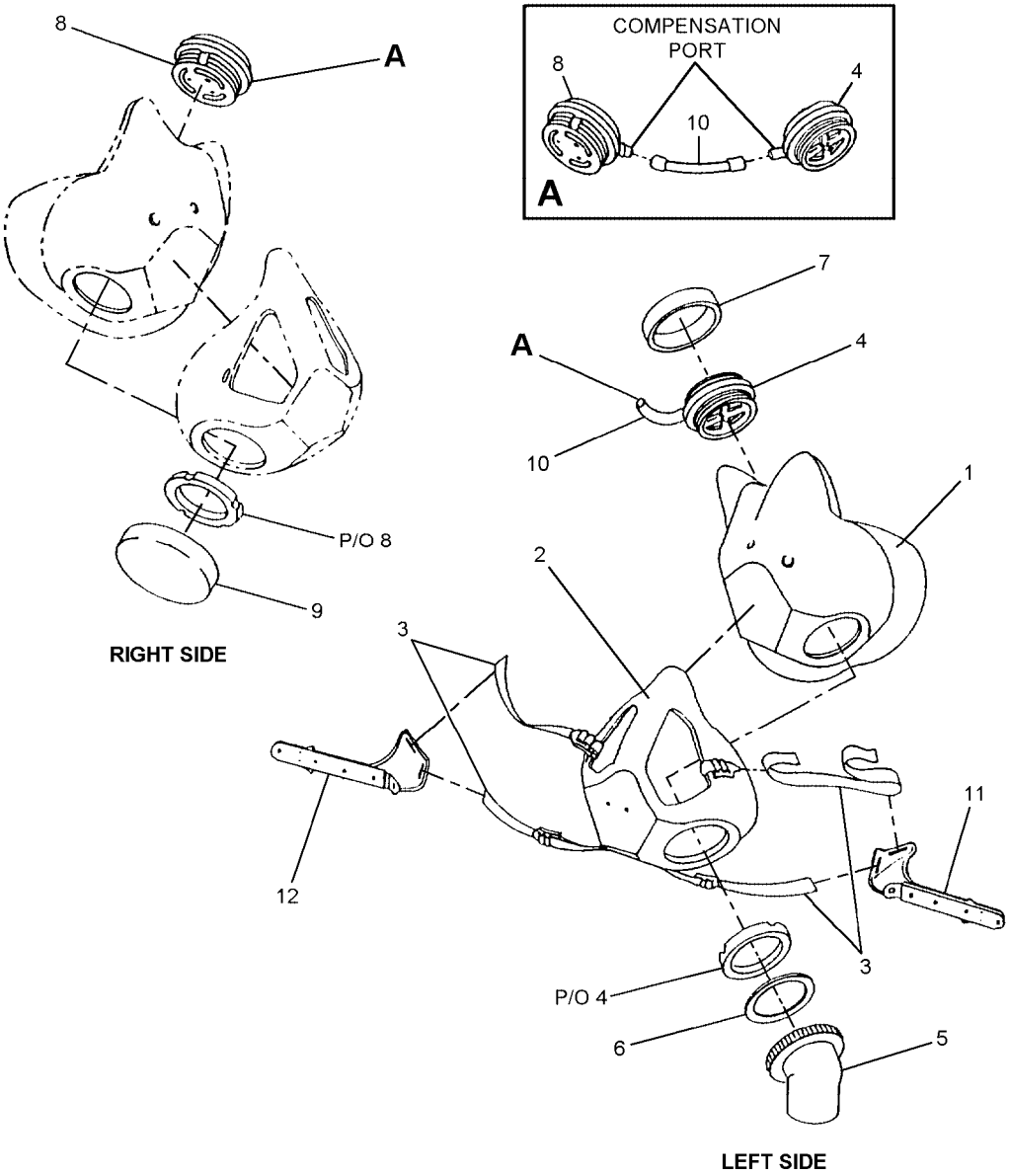

6-23-1

Figure 6-23. MBU-23(V)1/P Basic Oxygen Mask Assembly Components (Sheet 1 of 2)

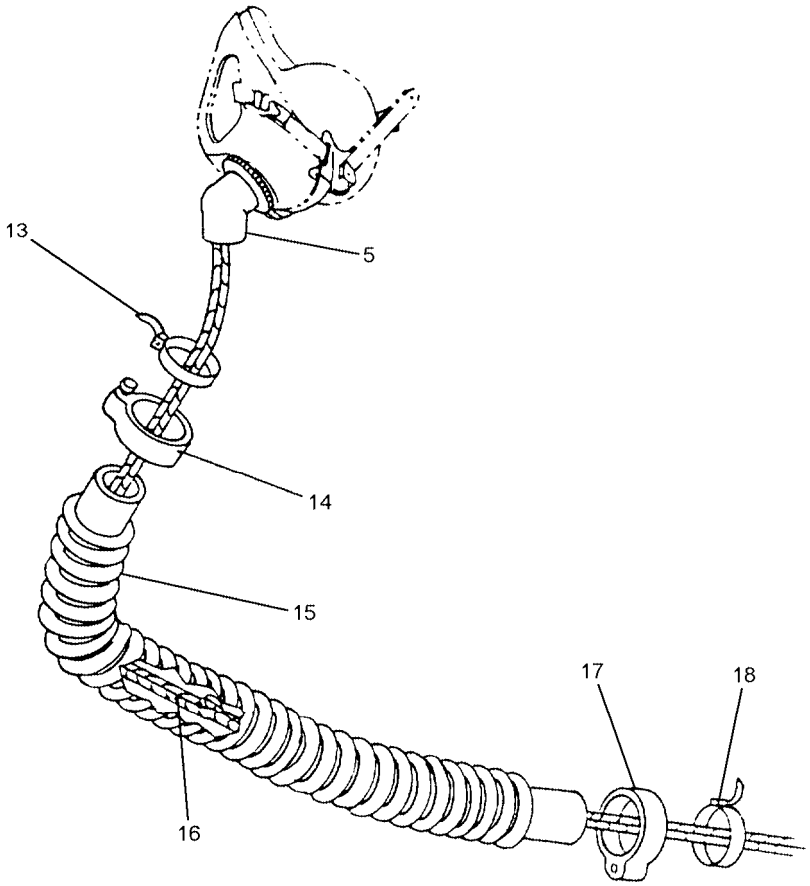

6-23-2

Figure 6-23. MBU-23(V)1/P Basic Oxygen Mask Assembly Components (Sheet 2 of 2)

Figure and Index Number	Part Number	Description 1 2 3 4 5 6 7	Units Per Assembly	Usable On Code
6-23	G010-1314-21	MBU-23(V)1/P OXYGEN MASK ASSEMBLY, Small narrow	REF	A
	G010-1314-22	MBU-23(V)1/P OXYGEN MASK ASSEMBLY, Medium narrow	REF	B
	G010-1314-23	MBU-23(V)1/P OXYGEN MASK ASSEMBLY, Medium wide	REF	C
	G010-1314-24	MBU-23(V)1/P OXYGEN MASK ASSEMBLY, Large wide	REF	D
-1	G010-1101-11	. FACEPIECE, Small narrow	1	A
	G010-1101-12	. FACEPIECE, Medium narrow	1	B
	G010-1101-13	. FACEPIECE, Medium wide	1	C
	G010-1101-14	. FACEPIECE, Large wide	1	D
-2	G010-1181-01	. HARDSHELL, Small narrow	1	A
	G010-1181-02	. HARDSHELL, Medium narrow	1	B
	G010-1181-03	. HARDSHELL, Medium wide	1	C
	G010-1181-04	. HARDSHELL, Large wide	1	D
-3	MIL-T-5038	. WEBBING ASSEMBLY	A/R	
-4	G001-1077-01	. VALVE ASSEMBLY, Inhalation (When exhausted, use P/N G010-1050-03 (60240)) (Note 1)	1	
	G010-1050-03	. VALVE ASSEMBLY, Inhalation	1	
-5	G001-1078-01	. ELBOW, Inhalation Valve	1	
-6	G010-1064-01	. WASHER	1	
-7	G033-1015-02	. COVER, Valve, Inhalation	1	
-8	G001-1010-03	. VALVE ASSEMBLY, Exhalation	1	
-9	G033-1014-01	. COVER, Valve, Exhalation	1	
-10	G010-1058-01	. TUBE, Compensation	1	
-11	G013-1000-01	. BAYONET, Left	1	
-12	G013-1000-02	. BAYONET, Right	1	
-13	MS3367-4-0	. STRAP, Tiedown	1	
-14	G012-1034-02	. GUIDE, Cable, Upper	1	
-15	G010-1025-01	. HOSE, Oxygen delivery	1	
	G002-1244-01	. HOSE, Long, Oxygen delivery (Note 2)	1	
-16	M5040-2N	. CORD, Restraint, Fibrous	1	
-17	G012-1035-02	. GUIDE, Cable, Lower	1	
-18	MS3367-4-0	. STRAP, Tiedown	1	

Notes:
1. Requires spanner wrench P/N G010-2009-03 for assembly. Spanner wrench is available open purchase from Gentex Corporation, 11525 6th St. Rancho Cucamonga, CA 91730 (909) 481-7667.
2. 24 inch hose, optional item for MBU-23/P Mask. Open purchase from Gentex Corporation, 11525 6th St. Rancho Cucamonga, CA 91730 (909) 481-7667.

NUMERICAL INDEX

Part Number	Figure and Index Number	SM&R Code
AN500D2-5	6-17-7	PAOZZ
	6-18-7	PAOZZ
	6-19-7	PAOZZ
	6-20-7	PAOZZ
	6-21-7	PAOZZ
	6-22-7	PAOZZ
G001-1010-03	6-23-8	PAOZZ
G001-1077-01	6-23-4	PAOZZ
G001-1078-01	6-23-5	PAOZZ
G002-1244-01	6-23-15	XDOZZ
G010-1025-01	6-23-15	PAOZZ
G010-1050-03	6-23-4	PAOZZ
G010-1058-01	6-23-10	PAOZZ
G010-1064-01	6-23-6	PAOZZ
G010-1101-11	6-23-1	PAOZZ
G010-1101-12	6-23-1	PAOZZ
G010-1101-13	6-23-1	PAOZZ
G010-1101-14	6-23-1	PAOZZ
G010-1181-01	6-23-2	PAOZZ
G010-1181-02	6-23-2	PAOZZ
G010-1181-03	6-23-2	PAOZZ
G010-1181-04	6-23-2	PAOZZ
G010-1314-21	6-17-1	PAOZZ
	6-18-1	PAOZZ
	6-19-1	PAOZZ
	6-20-1	PAOZZ
	6-21-1	PAOZZ
	6-22-1	PAOZZ
	6-23	PAOZZ
G010-1314-22	6-17-1	PAOZZ
	6-18-1	PAOZZ
	6-19-1	PAOZZ
	6-20-1	PAOZZ
	6-21-1	PAOZZ
	6-22-1	PAOZZ
	6-23	PAOZZ
G010-1314-23	6-17-1	PAOZZ
	6-18-1	PAOZZ
	6-19-1	PAOZZ
	6-20-1	PAOZZ
	6-21-1	PAOZZ
	6-22-1	PAOZZ
	6-23	PAOZZ
G010-1314-24	6-17-1	PAOZZ
	6-18-1	PAOZZ
	6-19-1	PAOZZ
	6-20-1	PAOZZ
	6-21-1	PAOZZ
	6-22-1	PAOZZ
	6-23	PAOZZ
G012-1034-02	6-23-14	PAOZZ
G012-1035-02	6-23-17	PAOZZ
G012-1076-01	6-17-5	PAOZZ
	6-18-5	PAOZZ
	6-19-5	PAOZZ
	6-20-5	PAOZZ
	6-21-5	PAOZZ
	6-22-5	PAOZZ
G012-1141-01	6-17-6	PAOZZ
	6-18-6	PAOZZ
	6-19-6	PAOZZ
	6-20-6	PAOZZ
	6-21-6	PAOZZ
	6-22-6	PAOZZ
G013-1000-01	6-23-11	PAOZZ
G013-1000-02	6-23-12	PAOZZ
G033-1014-01	6-23-9	PAOZZ
G033-1015-02	6-23-7	PAOZZ
MIL-M-26542/4	6-17-3	PAOZZ
	6-18-3	PAOZZ
	6-19-3	PAOZZ
	6-20-3	PAOZZ
	6-21-3	PAOZZ
	6-22-3	PAOZZ
MIL-T-5038	6-23-3	PAOZZ
MS22016-1	6-20-2	PAOZZ
	6-21-2	PAOZZ
MS27796	6-17-2	PAOZZ
	6-18-2	PAOZZ
	6-19-2	PAOZZ
MS3367-4-0	6-23-13	PAOZZ
	6-23-18	PAOZZ
M22442/24-1	6-18-9	PAOZZ
M22442/26-3	6-17-8	PAOZZ
	6-19-8	PAOZZ
M22442/42-1	6-18-8	PAOZZ
M23595/3-3	6-17-4	PAOZZ
	6-18-4	PAOZZ
	6-19-4	PAOZZ
	6-20-4	PAOZZ
	6-22-4	PAOZZ
M5040-2N	6-23-16	PAOZZ
123AB50534-5	6-22-2	PAOZZ
57C12661-1-2-1-4	6-21-9	PAOZZ
765AS380-1	6-20-8	PAOZZ
	6-21-8	PAOZZ
	6-22-8	PAOZZ

Section 6-3. MBU-24/P22P-16 Oxygen Mask

6-65. GENERAL.

6-66. The MBU-24/P22P-16 Oxygen Mask (figure 6-24) is designed to be worn in conjunction with the HGU-87(V)/P22P-16 and HGU-89(V)/P22P-16 helmets as a component of the pressure breathing system comprising the Navy Combat Edge (NCE) A/P22P-16 Aircrew Protective Assembly.

6-67. CONFIGURATION.

6-68. The MBU-24/P22P-16 oxygen mask has separate inhalation and exhalation valves. The separate valve design requires the breathing hose to be offset from the center of the mask. A compensation tube interconnects the inhalation and exhalation valves. Inhalation pressure is sensed by the compensation tube which directs a portion of the pressure to the underside of the exhalation valve plate. This compensation pressure keeps the exhalation valve shut during inhalation. Mask connection to the helmet is accomplished using offset bayonet connectors that interface with bayonet receivers installed on the helmet. A bladder supply hose connects the mask assembly to the KMU-561/P22P-16 bladder installed in the HGU-87(V)/P22P-16 and HGU-89(V)/P22P-16 helmets.

6-69. APPLICATION.

6-70. The MBU-24/P oxygen mask is used in conjunction with Navy Combat Edge flight equipment worn by aircrew personnel assigned to high performance aircraft which have the Navy Combat Edge system integrated.

6-71. SERVICE LIFE.

6-72. The MBU-24/P oxygen mask shall remain in service until it can no longer be economically repaired.

6-73. MODIFICATIONS.

6-74. Table 6-5 lists all technical directives applied to the MBU-24 Mask. There are no modifications currently authorized for the MBU-24/P22P-16 Oxygen Mask Assembly.

6-75. SIZING/FITTING.

6-76. Refer to paragraph 6-22 for sizing and fitting procedures.

6-77. OXYGEN MASK DELIVERY HOSE TOLERANCE.

6-78. Grasp oxygen delivery hose at each end and extend to full length permitted by the installed strain relief cord. Hose should not extend more than one inch beyond its normal extension. If hose stretches beyond its normal extended length by more than one inch, adjustment of strain relief cord is necessary to bring it within tolerance as follows:

1. Press red button on U-173/U plug and carefully disconnect plug from amplifier.

2. Unthread inhalation valve from mask.

CAUTION

Cut tiedown strap head laterally from above.
Do not cut under tiedown head.

3. Using diagonal cut pliers remove tiedown straps from inhalation valve elbow and 3-pin connector.

Table 6-5. MBU-24/P22P-16 Oxygen Mask Assembly Directives

Description of Modification	Application	Modification Code
None	None	None

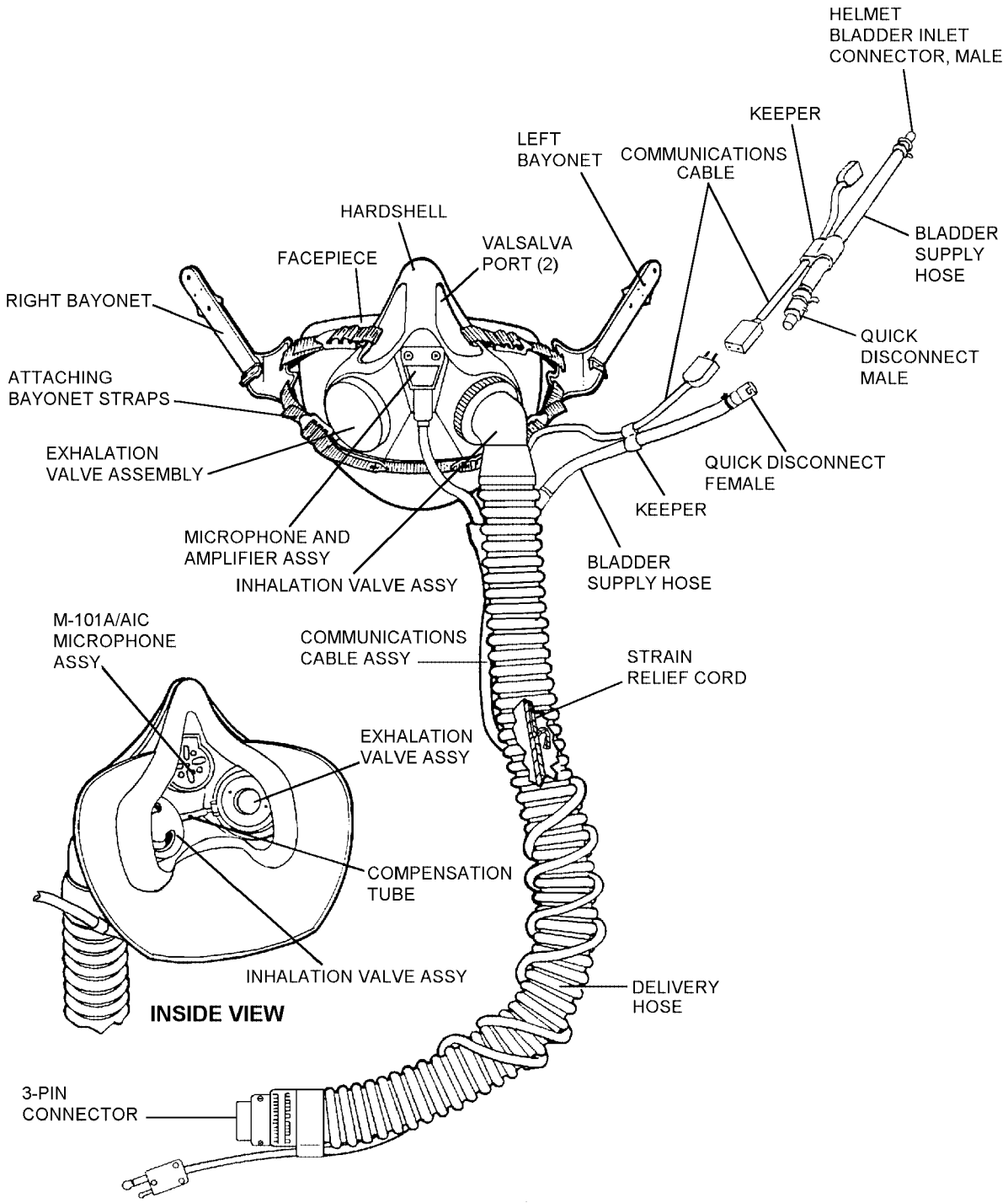

6-24

Figure 6-24. MBU-24/P22P-16 Enhanced Pressure - Demand Oxygen Mask Assembly

4. Separate delivery hose from 3-pin connector.

NOTE

Present MBU-24/P22P-16 Oxygen Mask does not have clip on strain relief cord so retaining pin must be removed from 3-pin connector to release cord.

5. Using 3/32 inch drift punch, remove retaining pin and remove strain relief cord from 3-pin connector.

6. Remove delivery hose from inhalation valve elbow. Slide delivery hose off the strain relief cord.

7. Shorten strain relief cord by retying cord at the loop knot. See figure 6-25.

8. Reinstall hose. Check hose length and repeat process if necessary until proper length is achieved.

6-79. FITTING HELMET BLADDER SUPPLY HOSE.

6-80. Have aircrew member don helmet and mask and proceed as follows:

1. Attach male quick disconnect to helmet bladder supply hose and secure with tiedown strap using a tensioning tool at setting 3. Connect male and female quick disconnects that form the junction in the bladder supply hose.

2. Align bladder supply hose with the edge of the opening of the bladder inlet connector. Mark supply hose with chalk where connector meets the supply hose. Cut off excess hose.

NOTE

To reduce the possibility of creating either a snag hazard or a potential oxygen blockage, the supply hose should not be kinked or bowed away from helmet.

3. Install male bladder inlet connector and verify the length.

4. Secure bladder inlet connector to bladder hose with tiedown strap using tensioning tool at setting 3.

6-81. MAINTENANCE.

6-82. Aircrew member responsibility for maintenance of the MBU-24/P22P-16 oxygen mask is limited to Preflight and Postflight Inspections. All other maintenance actions shall be performed by Organizational Maintenance and documented in accordance with OPNAVINST 4790.2 Series.

6-83. INSPECTION. Refer to paragraph 6-43 for inspection requirements and procedures. Refer to table 6-6 for troubleshooting.

6-84. FUNCTIONAL CHECK OF OXYGEN MASK AND REGULATOR-TO-SEAT KIT HOSE. Functional check should be performed using Test Set TTU-489/E in accordance with NAVAIR 17-15BC-22.

6-85. DISASSEMBLY OF MBU-24/P22P-16. The MBU-24/P22P-16 oxygen mask is disassembled as follows:

1. Disassemble oxygen mask in accordance with paragraph 6-50 instructions.

2. Cut tiedown strap and remove female quick disconnect from end of helmet bladder supply hose.

3. Remove cable keeper from bladder supply hose using elastrator.

4. Remove cable guides (with communication cable intact) from oxygen delivery hose using elastrator.

5. Uncoil communication cable from delivery hose.

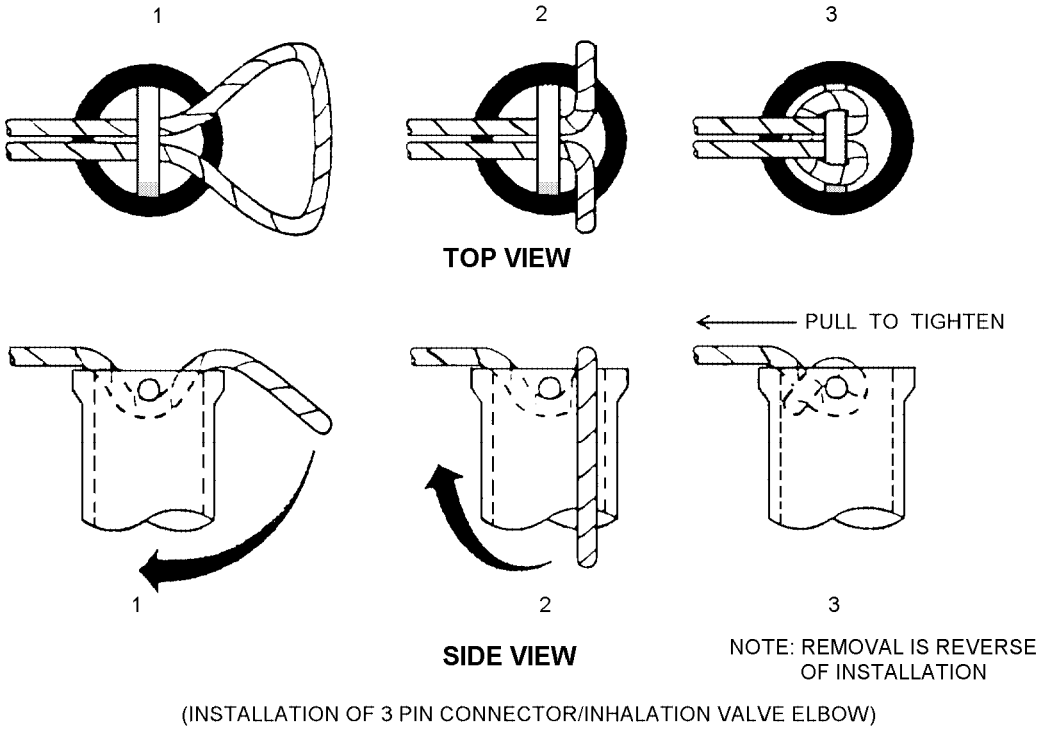

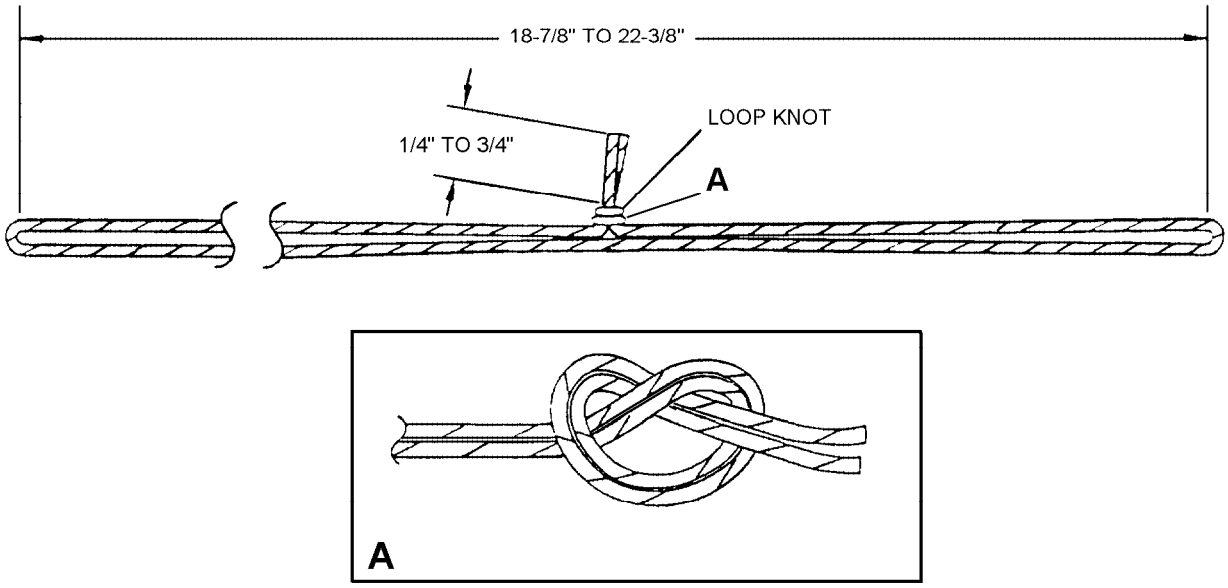

6-25

Figure 6-25. MBU-24/P22P-16 Oxygen Mask Strain Relief Cord Installation

Table 6-6. Troubleshooting MBU-24/P22P-16 Oxygen Mask

Trouble	Probable Cause	Remedy
Leakage from facepiece	Improper mask size	Ensure correct mask size and fit IAW paragraph 6-22
	Improper mask adjustment	Verify strap, bayonet and receiver adjustment is correct IAW paragraph 6-31
	Mask seal torn or ripped	Replace mask facepiece IAW paragraph 6-88
	Mask shell failed	Remove/Replace mask hard shell IAW paragraph 6-88
	Helmet bladder functioning improperly	See procedures for helmet bladder
Reduced or no oxygen flow to mask	Malfunction of regulator	See procedures for CRU-103/P regulator.
	Improper connection of supply hose to regulator.	Verify connection of hose to regulator. Inspect connector for proper operation. Replace connector as required. See paragraph 6-97
	Leak or obstruction of oxygen supply hose.	Inspect oxygen hose for rips/tears/ obstructions. Replace hose as required. See paragraph 6-91
	Improper connection of oxygen supply hose to inhalation valve.	Ensure that threaded connection at inhalation valve is correct threaded and snug IAW paragraph 6-57
	Inhalation valve obstructed	Inspect inhalation valve for obstruction. Clean and replace as required IAW paragraph 6-51
Unable to exhale or difficulty exhaling	Compensation tube broken or disconnected	Inspect compensation tube for proper connection or failure. Reconnect or replace as required IAW paragraph 6-57
	Inhalation valve failed open	Inspect exhalation valve for proper operation. Replace as required IAW paragraph 6-57
	Exhalation valve failed/obstructed	Inspect compensation tube for obstruction and correct installation. Replace compensation tube as required IAW paragraph 6-57

Table 6-6. Troubleshooting MBU-24/P22P-16 Oxygen Mask (Cont)

Trouble	Probable Cause	Remedy
No/reduced PPG pressure	Improper pressure from regulator	See procedure for regulator
	Compensation tube kinked or twisted	Inspect exhalation valve for obstruction and correct installation. Replace compensation tube as required IAW paragraph 6-57
	Inhalation valve obstruction	Inspect inhalation valve for obstruction. Clean/replace as required IAW paragraphs 6-51 and 6-57
	Exhalation valve failed to open	Inspect exhalation valve for proper operation. Replace as required IAW paragraph 6-57
Uncommanded PPG pressure	Improper pressure schedule from regulator	See procedures for regulator
	Compensation tube broken or disconnected	Inspect compensation tube for proper connection or failure. Reconnect or replace as required IAW paragraph 6-57
	Inhalation valve failed to open	Inspect inhalation valve for proper operation. Replace as required IAW paragraph 6-57
	Exhalation valve failed/obstructed	Inspect exhalation valve for obstruction/ proper operation. Replace as required IAW paragraph 6-57

6-86. CLEANING AND SANITIZING. Refer to paragraph 6-51 for cleaning and sanitizing requirements and procedures.

6-87. ASSEMBLY. Assemble the MBU-24/P22P-16 oxygen mask as follows:

1. If applicable, reinstall bladder supply hose.

2. Install bladder inlet connection into bladder supply hose. Secure with tiedown strap using tensioning tool set at 3.

3. Coil communications cable around delivery hose, attach upper and lower cable guides to upper and lower ends of delivery hose.

4. Refer to figure 6-25 and prepare new strain relief cord as required.

5. Connect strain relief cord to inhalation valve elbow as shown in figure 6-25. Ensure knot is centered between ends of strain relief cord.

6. Insert free end of strain relief cord in delivery hose and pull cord through hose.

7. Install upper end of delivery hose onto inhalation valve elbow.

8. Connect free end of strain relief cord to 3-pin connector as shown in figure 6-25.

9. Install lower end of delivery hose on 3-pin connector.

10. Install upper and lower hose clamps using clamp pliers or install tiedown straps. Smooth all sharp edges.

11. Insert bladder supply hose through cable keeper.

12. Reinstall facepiece in hardshell and align inhalation and exhalation valve openings.

13. Reinstall inhalation and exhalation valves in accordance with paragraph 6-57.

WARNING

Crossthreading may give false indication that inflation valve elbow is properly installed and tightened. Cross threaded elbow could separate during flight.

14. Carefully reinstall inhalation valve elbow and orient so bladder supply hose will lie flush along helmet.

15. Reinstall microphone assembly in accordance with paragraph 6-56.

6-88. REPAIR/REPLACEMENT. Repair of the MBU-24/P22P-16 Oxygen Mask (figure 6-26) shall be limited to replacement of defective parts as determined by inspection and troubleshooting. Any holes or tears in any part of the facepiece or delivery hose shall be basis for rejection of damaged component.

6-89. Facepiece/Hardshell Strap Assembly. Refer to paragraph 6-55 for replacement of facepiece/hardshell strap assembly.

6-90. M-101/AIC Microphone Assembly. Refer to paragraph 6-56 for replacement of M-101/AIC Microphone Assembly.

6-91. MBU-24/P22P-16 Delivery Hose. To replace oxygen mask delivery hose assembly, proceed as follows:

Materials Required

Quantity	Description	Reference Number
1	Tensioning Tool	MS90387-1
1	Elastrator Tool	00-6297
2	Strap, Tiedown, Electrical	MS3367-1-0 (CAGE 96306) NIIN 00-984-6582
1	Hose, Oxygen Delivery	P/N G010-1155-01, NIIN 01-380-7440

1. Remove the delivery hose assembly as follows:

a. Press red button on communications cable plug and disengage plug from amplifier connector pins.

b. Unthread inhalation valve elbow from mask.

NOTE

Remove tiedown straps using diagonal cut pliers. Cut strap head in half laterally from above. Do not cut under tiedown strap head.

c. Remove tiedown strap on bladder supply hose three flange coupler and remove bladder supply hose.

d. Remove hose clamps using hose clamp pliers and a small screw driver or tiedown straps using diagonal pliers.

e. Remove cable guides from delivery hose with communications cable attached.

f. Uncoil communications cable from around delivery hose and set aside.

g. Separate 3-pin connector from delivery hose, release strain relief cord, remove 3-pin connector and set aside.

h. Remove delivery hose from inhalation valve elbow and attached strain relief cord.

2. Install new delivery hose assembly as follows:

a. Install bladder supply hose and coupler onto delivery hose outlet from inside delivery hose.

CAUTION

Exercise care not to damage delivery hose nipple when installing bladder supply hose on coupler.

NOTE

If installing bladder hose on three-flange coupler, position only the hose up to the middle flange. The hose does not go over the nipple on the delivery hose.

b. While supporting the bladder supply hose coupler from inside the delivery hose, install the helmet bladder supply hose on bladder supply hose coupler.

c. Install tiedown strap using tensioning tool set at 3.

d. If strain relief cord requires replacement, refer to paragraph 6-98.

e. Refer to figure 6-25 and connect strain relief cord to inhalation valve elbow. Ensure knot is centered between ends of cord as indicated.

f. Coil communications cable around replacement delivery hose and install upper and lower cable guides onto appropriate ends of hose.

g. Insert free end of strain relief cord into upper end of delivery hose and pull through hose. Slide upper end of delivery hose onto inhalation valve elbow.

h. Refer to figure 6-25 and connect free end of strain relief cord to 3-pin connector.

i. Check delivery hose tolerance in accordance with paragraph 6-77 and adjust if required.

j. Slide delivery hose onto 3-pin connector.

k. Orient inhalation valve elbow so that bladder supply hose will lie flush along helmet.

l. Install upper and lower hose clamps or tiedown straps using hose clamp pliers or strap tensioning tool.

WARNING

Cross threading may give false indication of properly installed and tightened inhalation valve elbow. Cross threaded elbow could separate during flight.

m. Install washer and thread inhalation valve elbow onto inhalation valve and hand tighten.

n. Connect U-173/U plug to amplifier and ensure red locking button engages.

6-92. Bladder Inlet Connector Quick Disconnect. Replace bladder inlet connector quick disconnect as follows:

1. Remove the bladder inlet connector quick disconnect as follows:

CAUTION

Cut through top of tiedown strap head. Do not cut under strap head.

a. Cut tiedown strap using diagonal pliers.

b. Remove bladder inlet quick disconnect.

2. Install new bladder inlet quick disconnect as follows:

a. Install bladder inlet quick disconnect in bladder supply hose.

b. Secure quick disconnect with tiedown strap using tensioning tool set at 3.

6-93. Helmet Bladder Supply Hose. Replace helmet bladder supply hose as follows:

1. Remove helmet bladder supply hose as follows:

CAUTION

Cut laterally through top of tiedown strap head. Do not cut under strap head.

a. Cut tiedown straps from each end of the helmet bladder supply hose using diagonal cut pliers.

NOTE

When removing helmet bladder supply hose equipped with three-flange coupler, cut only the outer tiedown strap and the tiedown strap securing the quick disconnect fitting of bladder supply hose.

b. Remove bladder inlet quick disconnect fitting from helmet bladder supply hose.

c. Push red button on U-173/U plug and separate plug from AM-7067/A amplifier.

d. Remove and retain two screws securing amplifier to microphone assembly and remove amplifier. Remove microphone bracket with microphone assembly from from mask.

e. Remove (unthread) inhalation elbow from mask.

f. Remove cable guides with communication cable intact from delivery hose.

g. Remove clamp using hose clamp pliers and small screwdriver, or tiedown strap using diagonal cut pliers, as applicable, from mask end of delivery hose.

h. Remove delivery hose from inhalation valve elbow.

i. Remove helmet bladder supply hose from delivery hose.

j. If required, remove helmet bladder supply hose coupler from inside delivery hose.

NOTE

If removing a three-flange hose coupler, remove remaining tiedown strap using diagonal cut pliers.

k. Remove helmet bladder supply hose from cable keeper using elastrator.

2. Install new helmet bladder supply hose as follows:

a. If required, install bladder supply hose coupler in delivery hose outlet from inside delivery hose.

CAUTION

Use care to prevent damage to delivery hose nipple when installing bladder supply hose on coupler.

NOTE

When installing bladder supply hose, position hose only to middle flange. Hose does not go over nipple extending from the delivery hose.

b. While supporting bladder supply hose coupler from inside delivery hose, install helmet bladder supply hose on coupler and secure with tiedown strap using tensioning tool set at 3.

c. Install delivery hose on inhalation valve elbow and adjust position of elbow so bladder supply hose will lay flush along helmet.

d. Secure delivery hose on elbow with hose clamp or, if preferred, tiedown strap using tensioning tool set at 8. Smooth any sharp edges.

e. Install lower cable guide on delivery hose.

f. Install cable keeper on bladder supply hose using elastrator.

g. Install bladder inlet connector on bladder supply hose and secure with tiedown strap using tensioning tool set at 3.

WARNING

Crossthreading could give false indication of properly tightened inhalation valve elbow and could become separated during flight.

h. Install washer and carefully thread elbow on inhalation valve hand tight. Ensure crossthreading does not occur.

i. Install microphone assembly inside mask.

j. Connect new AM-7067/A amplifier with gasket to microphone assembly from outside mask and secure with two mounting screws. Do not overtighten screws.

k. Connect U-173/U plug to amplifier connector ensuring red locking button engages.

6-94. Replacement of Helmet Bladder Supply Hose Extension. Replace helmet bladder supply hose extension connecting bladder supply hose from mask to helmet female quick disconnect as follows:

1. Remove helmet bladder supply hose extension as follows:

CAUTION

Remove tiedown strap by carefully cutting laterally through tiedown strap head using diagonal cut pliers. Do not attempt to cut under strap head.

a. Remove tiedown straps securing male connectors at each end of bladder supply hose extension. Remove connectors and retain for reinstallation.

b. Separate supply hose from hose/cable keeper using elastrator.

2. Install new helmet bladder supply hose extension as follows:

a. Route required length of new bladder supply hose through hose/cable keeper.

b. Install male connectors at each end of bladder supply hose and secure with tiedown straps using tensioning tool set at 3.

6-95. Replacement of Communication Cable Extension Assembly, Oxygen Mask to Helmet. Replace communication cable extension between cable leading from mask and helmet as follows:

1. Remove communication cable extension assembly as follows:

a. Remove connector from one end of defective communication cable assembly to facilitate removal.

b. Using elastrator separate cable assembly from hose/cable keeper.

2. Install new communication cable extension assembly as follows:

a. Using elastrator install new communication cable extension assembly in hose/cable keeper.

b. Connect new cable extension assembly between cable leading from mask and connector on helmet and perform communication check.

6-96. Communication Cable CX-13126A/A. Replace communication cable as follows:

1. Remove communication cable as follows:

a. Push red button on U-173/U plug and disconnect from AM-7067/A amplifier.

b. Remove communication cable from keeper using elastrator.

c. Remove communication cable from cable guides using elastrator.

d. Uncoil cable from delivery hose.

2. Install new communication cable as follows:

a. Insert communication cable in lower cable guide.

b. Coil cable around delivery hose, insert cable through upper cable guide, and cable keeper.

6-97. 3-Pin Connector. Replace 3-pin connector as follows:

1. Remove 3-pin connector as follows:

a. Remove cable guide from lower hose clamp or tiedown strap.

b. Remove hose clamp using hose clamp pliers and small screwdriver or tiedown strap using diagonal cut pliers.

c. Separate 3-pin connector from delivery hose.

d. Remove strain relief cord from 3-pin connector (figure 6-25).

2. Install new 3-pin connector as follows:

a. Attach strain relief cord to 3-pin connector (figure 6-25).

b. Insert 3-pin connector into delivery hose and secure with hose clamp or, if preferred, tiedown strap using tensioning tool set at 8. Smooth any sharp edges.

c. Slide cable guide over clamp or tiedown strap, as applicable.

6-98. Strain Relief Cord. Replace strain relief cord as follows:

Materials Required

Quantity	Description	Reference Number
As Required	Cord, Nylon	MIL-C-5040

1. Remove strain relief cord as follows:

a. Press red button on U-173/U plug and disconnect plug from amplifier.

b. Unthread inhalation valve elbow from mask.

c. Remove hose clamp using hose clamp pliers and small screwdriver or tiedown strap using diagonal cut pliers.

d. Separate 3-pin connector from delivery hose.

e. Refer to figure 6-25 and remove strain relief cord from 3-pin connector.

f. Separate delivery hose from from inhalation valve elbow. Remove delivery hose from over strain relief cord.

g. Disconnect strain relief cord from inhalation valve elbow.

2. Adjust or, if necessary, construct and install new strain relief cord as follows:

a. Cut a length of 100 pound-test nylon cord approximately 49.5 inch long.

b. Tie loop in cord at desired length as shown in figure 6-25. Pull cord out to full length tightly and check for proper length.

c. Sear cord ends 1/4 to 3/4 inch as shown in figure 6-25.

d. Install washer and thread the inhalation valve elbow to inhalation valve hand tight.

e. Insert U-713/U plug into amplifier connector ensuring red locking button engages.

6-98A. FABRICATION AND INSTALLATION OF OXYGEN MASK SECURING FASTENER. To provide a means of fastening the oxygen mask to the PCU-33/P series and PCU-56/P series torso harnesses to secure and protect the mask from accidental exposure to contamination, proceed as follows:

Materials Required

Quantity	Description	Reference Number
1	Button, Snap Fastener	MS27980-1B NIIN 00-359-6844
1	Socket, Snap Fastener	MS27980-6B NIIN 00-285-6250
1	Chuck, Socket	P/N 1410 NIIN 00-144-2084
1	Die, Button	P/N 1401 NIIN 00-090-4412
1	Snap Setter	P/N A741 NIIN 00-880-0619
1	Punch, Cutting Revolving	MIL-P-2001 NIIN 00-596-9604

1. With the oxygen mask properly fit and adjusted, there is a minimum of 1 and 1/2 inches of retention harness webbing remaining.

2. On the lower left retention harness strap, measure, toward the adjustment buckle, 3/4 of an inch from the sear cut end of the retention harness webbing and place a mark at the center of the webbing.

3. At the marked location, using a revolving punch, make a hole slightly smaller than the diameter of the shaft of the snap fastener button.

4. Assemble snap fastener button and socket onto retention harness with the button outboard, install onto harness webbing with a snap setter.

6-99. ILLUSTRATED PARTS BREAKDOWN.

6-100. This section lists and illustrates the assemblies and detail parts of the MBU-24/P22P-16 Oxygen Mask Assembly.

6-101. The IPB is intended for use in the identification, procurement, storing, and issuing of replacement parts. It also illustrates disassembly and assembly relationships. Installation, operation, and maintenance of this helmet shall be performed only by authorized personnel utilizing the instructions set forth in the preceding sections.

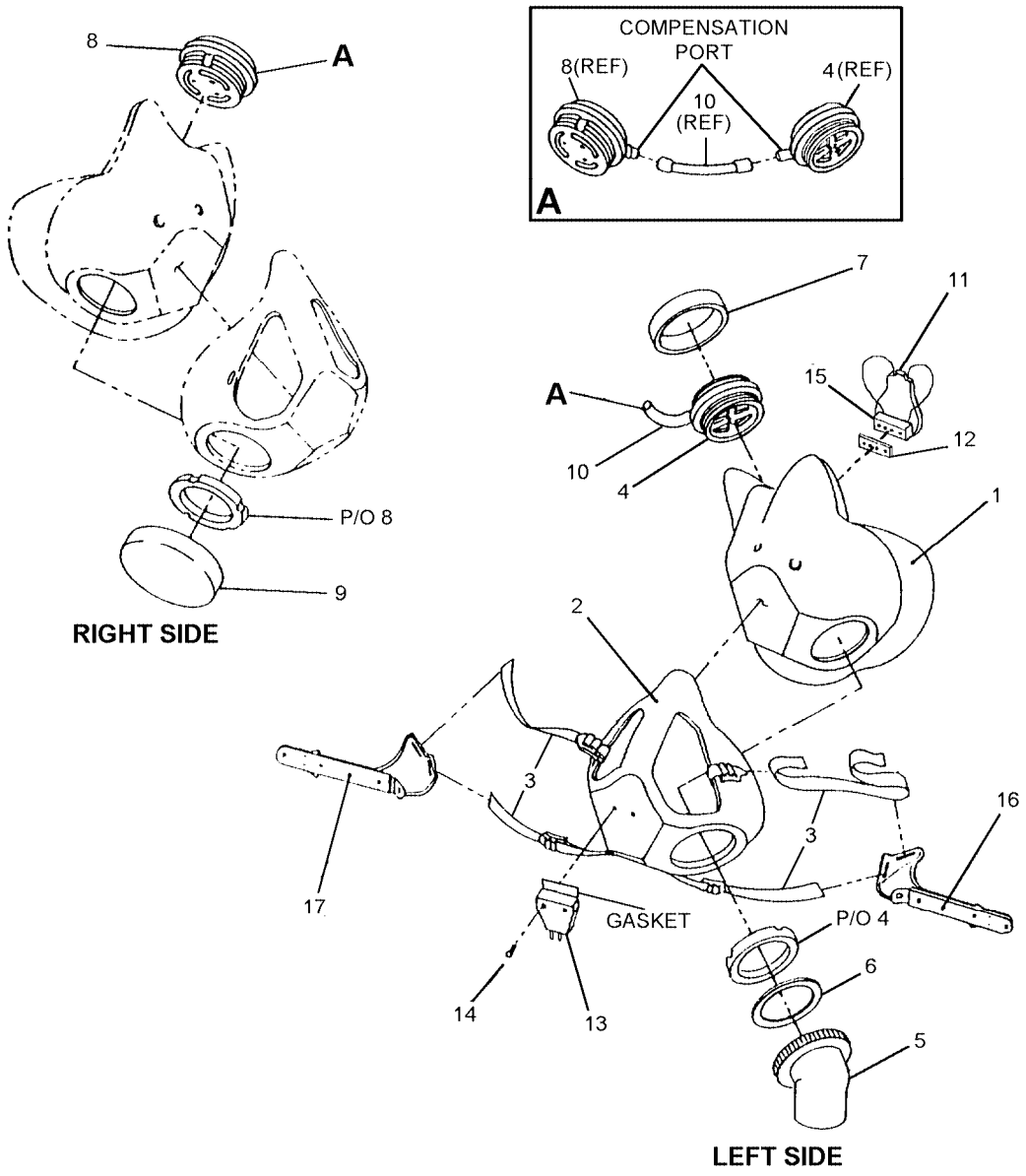

6-26-1

Figure 6-26. MBU-24/P22P-16 Oxygen Mask Assembly (Sheet 1 of 2)

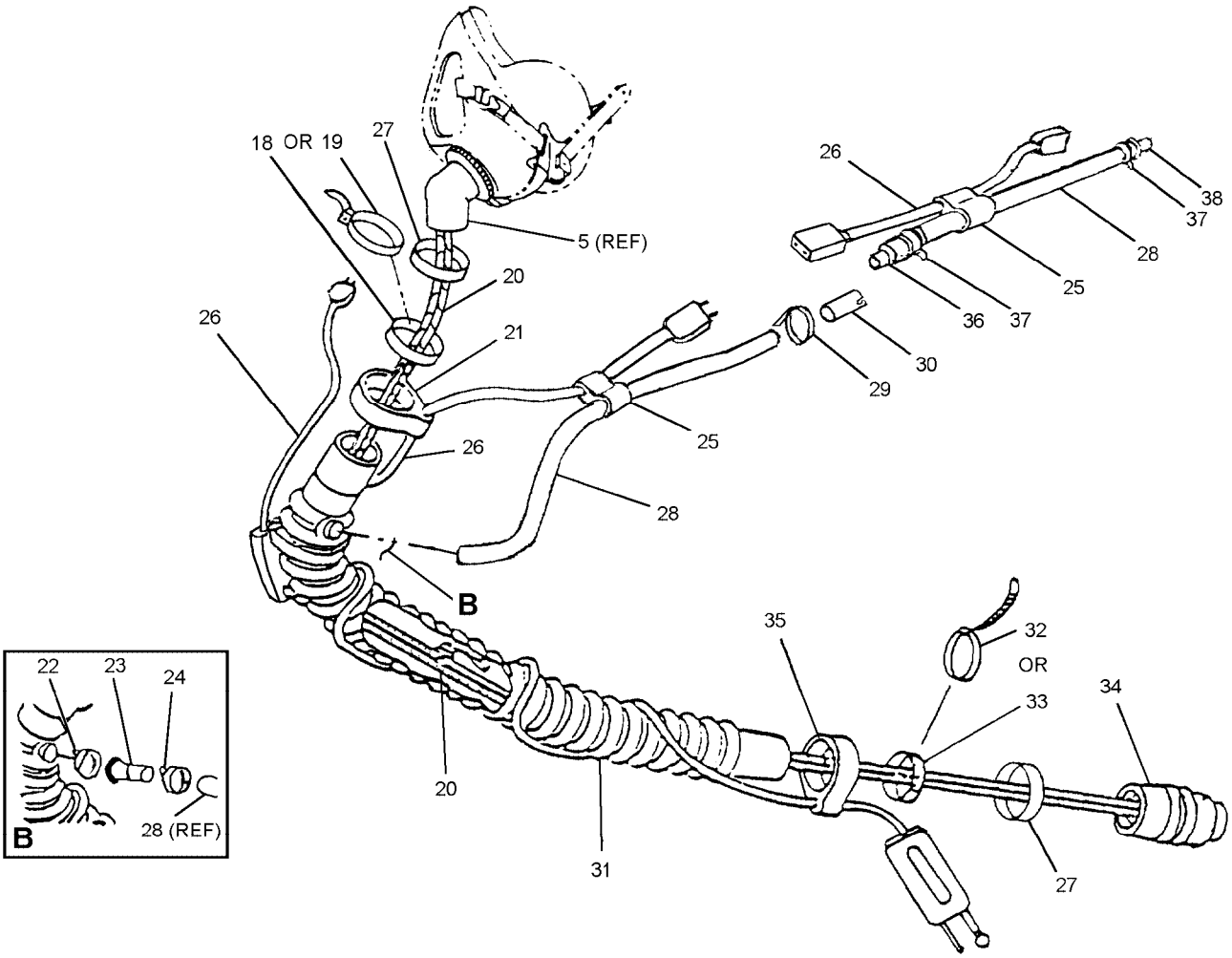

6-26-2

Figure 6-26. MBU-24/P22P-16 Oxygen Mask Assembly (Sheet 2 of 2)

Figure and Index Number	Part Number	Description 1 2 3 4 5 6 7	Units Per Assembly	Usable On Code
6-26	G010-1310-01	MBU-24/P22P-16 OXYGEN MASK ASSEMBLY Small Narrow	REF	A
	G010-1310-02	MBU-24/P22P-16 OXYGEN MASK ASSEMBLY, Medium Narrow	REF	B
	G010-1310-03	MBU-24/P22P-16 OXYGEN MASK ASSEMBLY, Medium Wide	REF	C
	G010-1310-04	MBU-24/P22P-16 OXYGEN MASK ASSEMBLY, Large Wide	REF	D
-1	G010-1101-11	. FACEPIECE, Small Narrow	1	A
	G010-1101-12	. FACEPIECE, Medium Narrow	1	B
	G010-1101-13	. FACEPIECE, Medium Wide	1	C
	G010-1101-14	. FACEPIECE, Large Wide	1	D
-2	G010-1181-01	. HARDSHELL, Small Narrow	1	A
	G010-1181-02	. HARDSHELL, Medium Narrow	1	B
	G010-1181-03	. HARDSHELL, Medium Wide	1	C
	G010-1181-04	. HARDSHELL, Large Wide	1	D
-3	MIL-T-5038	. WEBBING ASSEMBLY, Black	A/R	
-4	G001-1077-01	. VALVE ASSEMBLY, Inhalation (When exhausted, use P/N G010-1050-03 (60240)) (Note 1)	1	
	G010-1050-03	. VALVE ASSEMBLY, Inhalation	1	
-5	G001-1078-01	. . ELBOW, Inhalation Valve	1	
-6	G010-1064-01	. . WASHER	1	
-7	G033-1015-02	. . COVER, Valve, Inhalation	1	
-8	G001-1010-03	. VALVE ASSEMBLY, Exhalation	1	
-9	G033-1014-01	. COVER, Valve, Exhalation	1	
-10	G010-1058-01	. TUBE, Compensation	1	
-11	MIL-M-26542/4	. MICROPHONE ELEMENT, M-101/AIC	1	
-12	G012-1141-01	. GASKET	1	
-13	M23595/3-3	. AMPLIFIER ASSEMBLY, 7067A w/Gasket (ATTACHING PARTS)	1	
-14	AN500D2-5	. SCREW ---*---	2	
-15	G012-1076-01	. ADAPTER, M-101/AIC	1	
-16	G013-1000-01	. BAYONET, Left	1	
-17	G013-1000-02	. BAYONET, Right	1	
-18	MS22064-5	. CLAMP, Hose	1	
-19	MS3367-4-0	. STRAP, Tiedown	1	
-20	M5040-2N	. CORD, Restraint	1	
-21	G012-1034-02	. GUIDE, Cable, upper	1	
-22	MS3367-4-0	. STRAP, Tiedown	1	
-23	G010-1154-01	. COUPLER, Bladder Supply Hose	1	
-24	MS3367-4-0	. STRAP, Tiedown	1	
-25	G002-1056-01	. KEEPER, Hose/Cable	1	
-26	G030-1076-01	. CABLE ASSEMBLY, Communication	1	
-27	G010-1027-01	. COVER, Clamp	2	
-28	G002-1051-02	. HOSE, Bladder Supply, Helmet	1	
-29	MS3367-4-0	. STRAP, Tiedown	1	

Figure and Index Number	Part Number	Description 1 2 3 4 5 6 7	Units Per Assembly	Usable On Code
6-26-30	G002-1191-01	. CONNECTOR, Quick Disconnect, Female	1	
-31	G010-1155-01	. HOSE, Oxygen Delivery	1	
-32	MS3367-4-0	. STRAP, Tiedown	1	
-33	MS22064-5	. CLAMP, Hose	1	
-34	MS27796	. CONNECTOR, 3-Pin	1	
-35	G012-1035-02	. GUIDE, Cable, Lower	1	
-36	G002-1192-01	. CONNECTOR, Quick Disconnect, Male	1	
-37	MS3367-4-0	. STRAP, Tiedown	2	
-38	G002-1120-01	. CONNECTOR, Bladder Supply Hose, Male	1	
	Notes: 1. Requires spanner wrench P/N G010-2009-03 for assembly. Spanner wrench is available open purchase from Gentex Corporation, 11525 6th St. Rancho Cucamonga, CA 91730 (909) 481-7667.			

NUMERICAL INDEX

Part Number	Figure and Index Number	SM&R Code
AN500D2-5	6-26-14	PAOZZ
G001-1010-03	6-26-8	PAOZZ
G001-1077-01	6-26-4	PAOZZ
G001-1078-01	6-26-5	PAOZZ
G002-1051-02	6-26-28	PAOZZ
G002-1056-01	6-26-25	PAOZZ
G002-1120-01	6-26-38	PAOZZ
G002-1191-01	6-26-30	PAOZZ
G002-1192-01	6-26-36	PAOZZ
G010-1027-01	6-26-27	PAOZZ
G010-1050-03	6-26-4	PAOZZ
G010-1058-01	6-26-10	PAOZZ
G010-1064-01	6-26-6	PAOZZ
G010-1101-11	6-26-1	PAOZZ
G010-1101-12	6-26-1	PAOZZ
G010-1101-13	6-26-1	PAOZZ
G010-1101-14	6-26-1	PAOZZ
G010-1154-01	6-26-23	PAOZZ
G010-1155-01	6-26-31	PAOZZ
G010-1181-01	6-26-2	PAOZZ
G010-1181-02	6-26-2	PAOZZ
G010-1181-03	6-26-2	PAOZZ
G010-1181-04	6-26-2	PAOZZ
G010-1310-01	6-26	PAOOO
G010-1310-02	6-26	PAOOO
G010-1310-03	6-26	PAOOO
G010-1310-04	6-26	PAOOO
G012-1034-02	6-26-21	PAOZZ
G012-1035-02	6-26-35	PAOZZ
G012-1076-01	6-26-15	PAOZZ
G012-1141-01	6-26-12	PAOZZ
G013-1000-01	6-26-16	PAOZZ
G013-1000-02	6-26-17	PAOZZ
G030-1076-01	6-26-26	PAOZZ
G033-1014-01	6-26-9	PAOZZ
G033-1015-02	6-26-7	PAOZZ
MIL-M-26542/4	6-26-11	PAOZZ
MIL-T-5038	6-26-3	PAOZZ
MS22064-5	6-26-18	PAOZZ
	6-26-33	PAOZZ
MS27796	6-26-34	PAOZZ
MS3367-4-0	6-26-19	PAOZZ
	6-26-22	PAOZZ
	6-26-24	PAOZZ
	6-26-29	PAOZZ
	6-26-32	PAOZZ
	6-26-37	PAOZZ
M23595/3-3	6-26-13	PAOZZ
M5040-2N	6-26-20	PAOZZ

CHAPTER 7

HGU-24/P AND HGU-25(V)2/P CLOTH HELMET ASSEMBLIES AND RELATED SOUND ATTENUATING HEAD-SETS AND ACCESSORIES

Section 7-1. Description

7-1. GENERAL.

NOTE

Unless otherwise specified, paragraphs in this chapter pertain to all HGU-24/P and HGU-25(V)2/P assemblies.

7-2. The HGU-24/P and HGU-25(V)2/P cloth helmet assemblies (figures 7-1 and 7-2) are designed to provide the wearer with protection from head injuries and, when used with the 372-9AN2 Aural Sound Protectors, they provide attenuation of high intensity noise. The difference between these assemblies is that the HGU-24/P utilizes a sound powered microphone and head set assembly for communication; the HGU-25(V)2/P does not have communication capability. Generic commercial foam earplugs are available for use in conjunction with the cloth helmet assemblies, providing dual protection, or as standalone protective devices for brief exposures to a high noise environment. Custom fit earplugs are also available, but must be fit to the individual by medically qualified personnel to ensure optimum protection.

7-3. CONFIGURATION.

7-4. The cloth helmets are provided in four standard hat sizes and the attachable cranial impact shields are available in a wide variety of colors to meet the requirements of authorized flight quarters clothing allowance in the CV NATOPS manual (NIIN LP-000-7256). Standard protective goggles may be worn with all assemblies. Refer to table 7-1.

7-5. HGU-24/P HELMET ASSEMBLY. The HGU-24/P sound attenuating protective helmet assembly consists of four major components. These parts are the Khaki cloth inner liner, the colored front and back cranial impact shields and a sound powered microphone and head set assembly with integrated aural protectors. Standard and optional flight deck protective goggles are compatible for wear with this helmet assembly. See figure 7-1.

7-6. HGU-25(V)2/P HELMET ASSEMBLY. The HGU-25(V)2/P sound attenuating protective helmet is comprised of the same components as the HGU-24/P with the exception that in place of the sound powered microphone and head set assembly, the HGU-24/P utilizes a 372-9AN2 aural protector. Standard flight deck protective goggles are compatible for wear with this model. These cloth helmet assemblies use only white front and back cranial shields. See figure 7-2.

7-7. GENERAL USE EAR PLUGS. Commercially available general use, one size fits all, foam ear plugs are provided in a variety of shapes and colors and are intended to be used in conjunction with other sound attenuating devices to provide dual hearing protection in high noise environments.

7-8. CUSTOM FIT EAR PLUGS. Custom fit ear plugs are provided to individuals whose routine job assignment requires prolonged exposure to a high noise environment. These ear plugs are available in various sizes and must be individually fit to the wearer by trained medical personnel.

7-9. APPLICATION.

7-10. HGU-24/P HELMET ASSEMBLY. The HGU-24/P helmet assembly was designed primarily for use by crew chiefs of rotary and fixed wing aircraft when required to conduct special operations. It should be noted

that the preferred helmet for helicopter crew chiefs is the HGU-84/P (Chapter 3).

7-11. HGU-25(V)2/P HELMET ASSEMBLY. The HGU-25(V)2/P helmet assembly is the preferred configuration for passengers aboard Carrier On-board Delivery (COD) and Vertical On-board Delivery (VOD) aircraft.

7-12. GENERAL USE AND CUSTOM FIT EAR PLUGS. Ear plugs are widely used to supplement protection provided by head sets and sound attenuating devices by aircraft servicing and handling personnel on the flight deck and flight line.

7-13. REFERENCE NUMBERS, ITEMS, AND SUPPLY DATA.

7-14. Section 7-6, Illustrated Parts Breakdown, contains information on each assembly, subassembly and component part of the basic HGU-24/P and HGU-25(V)2/P cloth helmet assemblies. The figure and index number, reference or part number, description, units per assembly and usable on codes are also provided with the breakdown.

Table 7-1. Major Components for HGU-24/P and HGU-25(V)2/P

Nomenclature	Quantity	Size	Color	Reference Number
Helmet, Cloth (less cranial impact shield)	1	6 3/4	Khaki	SPHPG1
	1	7	Khaki	SPHPG2
	1	7 1/4	Khaki	SPHPG3
	1	7 1/2	Khaki	SPHPG4
Shield Assembly, Cranial Impact (Front)	1	—	Brown	ASP332-2
	1	—	Blue	ASP332-3
	1	—	Green	ASP332-4
	1	—	Red	ASP332-5
	1	—	Yellow	ASP332-6
	1	—	White	ASP332-7
	1	—	Purple	ASP332-8
Shield Assembly, Cranial Impact (Back)	1	—	Brown	ASP333-2
	1	—	Blue	ASP333-3
	1	—	Green	ASP333-4
	1	—	Red	ASP333-5
	1	—	Yellow	ASP333-6
	1	—	White	ASP333-7
	1	—	Purple	ASP333-8
Front Pad Assembly	1	—	—	ASP223
Back Pad Assembly	1	—	—	ASP222
(HGU-24/P Only) Head Set Assembly, Sound Powered with Microphone and Suspension System	1	—	—	HSC61C
(HGU-25(V)2/P Only) Aural Sound Protector Assembly	1	—	—	372-9AN2
Goggles, Sun, Wind, and Dust	1	—	—	NIIN 01-328-8268
ESS Goggles (suitable substitute)	1	—	—	ESS01CB-NV NIIN 01-492-5720

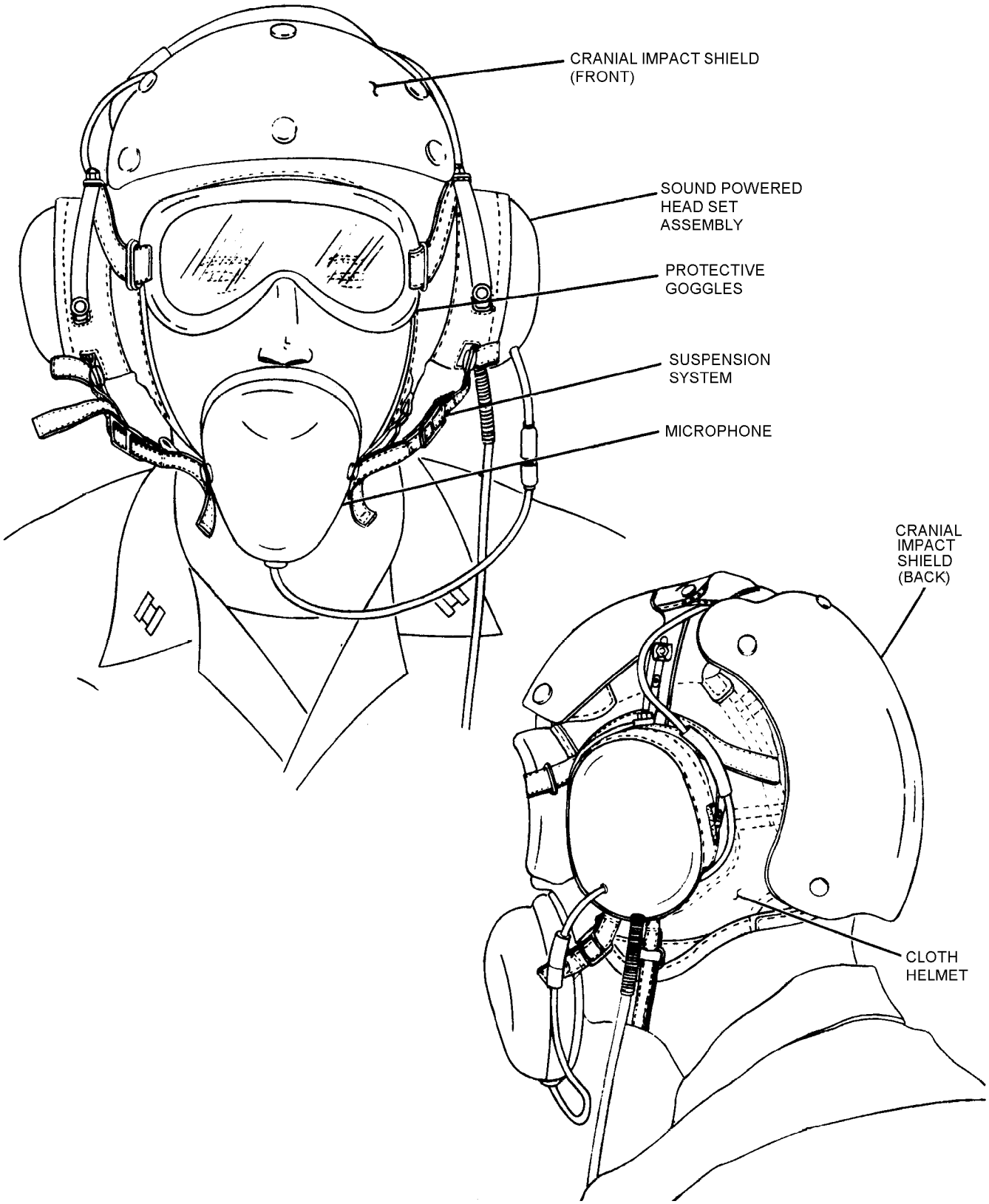

Figure 7-1. HGU-24/P Helmet Assembly

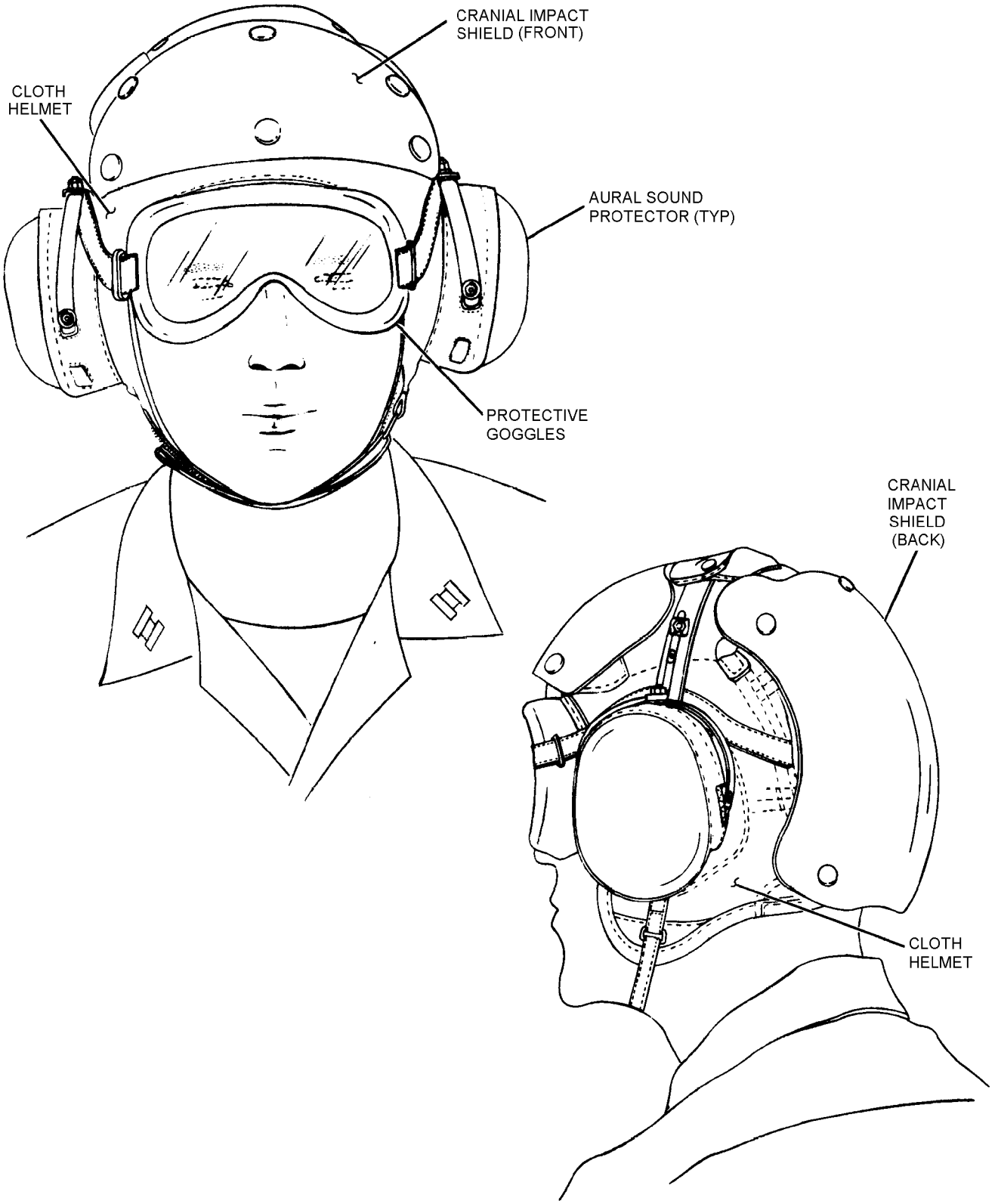

Figure 7-2. HGU-25(V)2/P Helmet Assembly

Section 7-2. Sizing

7-15. GENERAL.

7-16. The concept of sizing as used in this chapter refers to the basic methods to be followed by the Aircrew Survival Equipmentman to determine the proper size cloth helmet to requisition from supply. Once the appropriate size cloth helmet has been received from supply, it is ready to be built-up to the desired configuration (HGU-24/P or HGU-25(V)2/P). Refer to Section 7-3.

7-17. SIZING.

7-18. SIZING THE BASIC CLOTH HELMET. To determine the proper size cloth helmet for the aircrewmember, proceed as follows:

1. Determine aircrewmember's head circumference, using a cloth tape measure, by measuring around the aircrewmember's head at the hatband line.

2. Select the correct size cloth helmet for aircrewmember from measurement and hat size equivalent as indicated in table 7-2.

Table 7-2. Cloth Helmet Assembly Sizing Guide

Circumference (Inches)	Comparable Hat Size	Reference Number
19 - 21	6 3/4	SPHPG1
21 - 22	7	SPHPG2
22 - 23	7 1/4	SPHPG3
23 - 24	7 1/2	SPHPG4

7-19. SIZING AND INSERTING THE GENERAL USE EAR PLUG. The general use ear plug is a one-size-fits-all. To prepare for use, proceed as follows:

NOTE

Hands and ear plugs should be clean and free of dirt prior to performing the sizing operations.

1. Squeezing lightly between thumb and forefinger, roll the ear plug into a thin crease free cylinder. Ensure the plug is as tightly compressed as possible.

2. Once the plug is properly rolled and compressed, pull outward and upward on the outer ear and immediately insert the plug into the ear canal. In most instances it is easier to use the right hand to insert the plug into the right ear, using the left hand to pull outward on the outer ear. Hold the plug in place with the fingertip a few moments to allow it to expand and block out the noise.

3. Repeat the procedure above on the left ear, using the right hand to pull outward on the outer ear.

4. If not satisfied with the fit of the ear plug, remove the plug and repeat the process until a satisfactory fit is obtained.

7-20. SIZING THE CUSTOM FIT EAR PLUG. The custom fit ear plugs are sized to the individual by qualified medical personnel who will explain the specific insertion techniques to the user.

Section 7-3. Helmet Configuration Build-Up

7-21. GENERAL.

7-22. Once the basic cloth helmet assembly has been procured the helmet may be built-up by adding or removing major components in order to obtain the desired configuration for the intended application. This section used in accordance with table 7-1 should provide enough information for one to accomplish this task.

7-23. ASSEMBLY OF COMPONENTS.

7-24. HGU-24/P HELMET ASSEMBLY. To assemble the HGU-24/P helmet assembly proceed as follows:

NOTE

To assemble the HGU-24/P helmet assembly you begin by ordering the HSC61C sound powered headset and add the cloth helmet and other major components as shown in table 7-1.

1. Detach the microphone unit from HSC61C headset assembly by unplugging the microphone connector and detaching the lift-the-dot fasteners from the attaching snap fastener studs. Set aside for reinstallation.

2. Remove the ear domes from the headset assembly by removing installed retaining rings and pulling the ear dome lugs free from the retention band and set aside for reassembly.

3. Insert the ear domes into the openings provided in the cloth helmet assembly, ensuring the ear dome lugs and the snap fastener stud support bracket extent through the prefabricated slots in the left and right cloth helmet ear dome openings.

4. Place headset assembly retention bands over the ear dome lugs and secure in place with retaining rings.

5. Position the headset assembly head-pad into the prefabricated channel of the cloth helmet and secure in place using three snap fasteners provided. Set partially assembled helmet aside while preparing the impact shields for installation.

6. Attach front and back pads to the inside surface of the impact shields using installed hook and pile fastener tape.

NOTE

During assembly of the impact shields to the cloth helmet to securing the pull-the-dot snap fasteners, turn the strap the snap fastener stud installed, 90 degrees from its normal position, insert the outboard part of the stud into the socket, then press in the of the stud under the dot. To facilitate removal of the impact, turn the strap with the snap fastener stud installed 180 degrees its normal position and pull away from the dot.

7. Snap the impact shields to the cloth helmet. Ensure that head-pad cutouts are adjacent to each other at the top of the helmet assembly during assembly.

8. Attach microphone suspension straps to the support brackets using the installed snap fasteners.

9. Unthread one side of the elastic goggle retention strap from the friction adapter buckle. Position goggle across facial opening of the cloth helmet assembly to simulate as worn position. Route free end of retention strap webbing rearward beneath headset retention band support, between cloth helmet assembly and rear impact shield foam pad, beneath retention band support on the opposite side, and through slot on side of goggle assembly.

10. Re-thread retention strap webbing through friction adapter, don helmet assembly and adjust retention webbing to obtain a satisfactory fit.

11. Inspect assembly and document in accordance with OPNAVINST 4790.2 series.

7-25. Installation of Tempest Communications Cable and MJS-103 Switching Assembly (MK-1564/AIC). To install the Tempest Communications Cable and MJS-103 Switching Assembly (MK-1564/AIC) onto the HGU-24/P Helmet Assembly aural protectors and microphone suspension assembly, proceed as follows:

Materials Required

Quantity	Description	Reference Number
1	Tempest Communications Cable, with MJS-103 Switching Assembly	MK-1564/AIC NIIN 01-164-0561
As Required	Strap, Tiedown	MS3367-1-0 NIIN 00-984-6382

NOTE

Communications assembly, P/N MK-1564/AIC, is delivered with earcups, earphones and earphone holders attached. The earcup assemblies are not used with the following configuration and must be removed in order to complete this installation.

1. Removal of installed sound powered headset components from the aural protectors and microphone suspension assembly:

a. Disconnect the microphone suspension assembly connector (U-173/U) from the sound powered headset receptacle (U-172/U) on the left spring band ear dome. Release the lift-the-dot fasteners securing the microphone suspension assembly to the right and left ear domes and set aside for microphone removal.

b. Remove the two screws securing the coiled spring strain relief assembly to the bottom of the left ear dome.

c. Spread the headset ear dome retention bands and detach ear dome lugs from retention bands. Remove detached ear domes from the cloth helmet assembly.

d. From inside the left ear dome, remove the foam insert encircling the earphone and set aside for reuse. Remove the two screws and flat washers holding the earphone to the positioning assembly. Withdraw the earphone, with existing communications cable attached, from the interior of the ear dome. Remove the two screws securing the cable leads to the earphone terminals and discard earphone. Repeat the procedure for the right ear dome.

e. Using diagonal cut pliers or an end cutter, remove the crimped communication cable retaining ring from the ear dome cable lead and withdraw the cable lead, with encircling rubber grommet from each ear dome. Carefully split and remove rubber grommets from communication cable leads. Set aside for reuse.

f. Remove the two screws and flat washers securing the microphone to the positioning assembly inside the suspension assembly. Withdraw the microphone, with attached cable, from inside the suspension assembly and remove the two screws holding the cable leads to the microphone terminals.

g. Remove the crimped communication cable retaining ring using diagonal cut pliers or an end cutter. Dislodge and remove the large split grommet encircling the microphone cable from the bottom of the suspension assembly and withdraw the cable from the suspension assembly. Set split grommet aside for reuse in the installation of the tempest communication cable. Discard removed microphone.

h. Cut and remove heat shrink securing the earphone lead to the ear dome retention band. Loosen the two cable clip elastic stop nuts located on the right and left sides of the aural protector headband and dislodge the earphone lead from the headband. Split and remove the rubber grommets from the earphone lead and set aside for reuse. Discard the earphone lead.

2. To configure the HGU-24/P Helmet Assembly with the Tempest Communications Cable and MJS-103 Switching Assembly (MK-1564/AIC), proceed as follows:

a. Remove the earseals from the Tempest Cable Assembly earcups and withdraw the earphone holders from the inside of each earcup. Loosen setscrews securing the earphone leads to the earphone assemblies and set the earphone holders with enclosed earphones aside. Withdraw the tempest cable earphone leads from the earcup assemblies. Discard removed earcups and seals.

b. To establish the location of the MJS-103 mounting screw location on the exterior surface of the left ear dome, measure upward, using a cloth tape measure, 1 1/16 inches from the outboard threaded brass insert and place a mark. From this location, measure upward 3/16 inch and place a second mark.

NOTE

The MJS-103 Communication Switching Assembly is positioned on the left ear dome with the actuating lever downward.

c. On the back of the MJS-103 Communication Switching Assembly, remove the two screws securing the backing plates to the assembly. Using one of the backing plates, verify the position and location of the proposed mounting screw holes.

d. At the verified locations, using a No. 35 drill bit, ensuring the drill bit is perpendicular to the surface of the left ear dome, drill the two MJS-103 mounting screw holes. Deburr holes using a rattail jeweler's file.

NOTE

Only one of the two backing plates provided with the MJS-103 switching assembly is required for these installation procedures.

e. Position a backing plate over the drilled mounting holes on the inside of the left ear dome. From the inside of the ear dome, pass the two mounting screws outward, through the backing plate and the ear dome shell, into the threaded mounting holes on the rear of the switching assembly. Tighten the mounting screws securely.

f. Remove the tempest microphone element from the boom bracket by removing the mounting screw. Discard the boom bracket assembly.

g. Cut a one-inch wide by two-inch long section of self-adhesive hook fastener tape. Remove the protective backing from the section of hook fastener tape and position the hook tape vertically on the inside surface of the microphone suspension assembly.

h. Cut and trim a section of self-adhesive pile fastener tape to fit on the back of the tempest microphone element. Remove the protective backing and affix the pile fastener tape to the back of the microphone element. Feed the connector end of the microphone cable through the mouthpiece portion of the suspension assembly and out the large hole at the lower end of the assembly.

i. Wrap the large split grommet around the microphone cable at the point it exits the lower end of the suspension assembly. Ensuring the grommet completely encircles the cable, seat the grommet securely into the hole. Keeping the microphone element oriented vertically, mate the hook and pile fastener tape material. Place closed cell foam inserts, removed from ear domes in step 1d., around the microphone element on the inside of the suspension assembly.

j. Reinstall ear domes into cloth helmet assembly and reattach headset ear dome retention bands over ear dome lugs.

k. Route the longer communication cable earphone lead across the rear of the cloth helmet assembly between the inner surface of the back cranial shield and the foam comfort pad to the right ear dome. The shorter earphone lead is routed directly to the left ear dome.

l. Insert the cable earphone leads into the ear domes through the pre-drilled holes at the rear edge of the ear domes. Encircle each lead with one of the rubber grommets split during step 1e. at the point the earphone lead enters each ear dome. Making certain the grommets completely encircle the lead, insert the grommets into the pre-drilled holes, ensuring they lay smoothly on the exterior surface of the ear dome.

m. Insert earphone cable contacts into tempest earphones and tighten the setscrews. Place earphone holders, with enclosed earphones into ear domes. Smooth earphone holder inside ear domes to avoid fabric bunching. Reinstall earseals by hooking them over one end of the ear dome and carefully stretching them over the ear dome lip.

n. To avoid chance of entanglement, fake excess tempest power cable into 5-inch bights and secure each end with electrical tiedown straps.

7-26. HGU-25(V)2/P HELMET ASSEMBLY. To assemble the HGU-25(V)2/P helmet assembly proceed as follows:

NOTE

The HGU-25(V)2/P helmet assembly is configured with the 372-9AN2 Aural Protectors only. Additionally, the HGU-25(V)2/P is assembled using white cranial impact only.

1. Remove the ear domes from the 372-9AN2 Aural protector by removing installed retaining ring and pulling the ear dome lugs free from the retention band and set aside for re-assembly.

2. Insert the ear domes into the openings provided in the cloth helmet assembly, ensuring the ear dome lugs extend through the prefabricated slots in the left and right cloth helmet ear dome openings.

3. Place headset assembly retention bands over the ear dome lugs and secure in place with retaining rings.

4. Position the headset assembly head-pad into the prefabricated channel of the cloth helmet and secure in place using three snap fasteners provided. Set partially assembled helmet aside while preparing the impact shields for installation.

5. Attach front and back pads to the inside surface of the impact shields using installed hook and pile fastener tape.

NOTE

To facilitate securing the pull-the-dot snap fasteners during assembly of the impact shields to the cloth helmet, turn the strap with the snap fastener stud installed, 90 degrees from its normal position, insert the outboard part of the stud into the socket, then press in the side of the stud under the dot.

6. Snap the impact shields to the cloth helmet. Ensure that head-pad cutouts are adjacent to each other at the of the helmet assembly during assembly.

7. Unthread the left side of the elastic goggle retention strap from the friction adapter buckle. Position goggle the facial opening of the cloth helmet assembly to simulate as worn position. Route free end of strap webbing rearward beneath headset retention band support, between cloth helmet assembly rear impact shield foam pad, beneath retention band support on opposite side, and through slot on side goggle assembly.

8. Re-thread retention strap webbing through friction adapter, don helmet assembly and adjust retention webbing to obtain a satisfactory fit.

9. Inspect assembly and document in accordance with OPNAVINST 4790.2 series.

7-27. INSTALLATION.

7-28. REFLECTIVE TAPE INSTALLATION. To install reflective tape to outer surface of cranial impact shield, proceed as follows:

Materials Required

Quantity	Description	Reference Number
As Required	Tape, Reflective:	
	White, 3-Inch Wide High Intensity	NIIN 01-078-8660 (Note 1)
	White, 6-Inch Wide	L-S-300, Class 3 NIIN 00-100-2153
	Orange, 1-Inch Wide	L-S-300, Class 1 NIIN 00-656-1494
	Orange, 3-Inch Wide	L-S-300, Class 1 NIIN 00-656-1186
As Required	Detergent, Mild	Commercial
As Required	Cloth, Lint-Free	MIL-C-85043 NIIN 00-165-7195

Notes: 1. The High Intensity grade white tape provides the greatest overall reflectivity and is optimum for visual detection. Submit requisitions for High Intensity grade tape to routing identifier code ZNC.

1. Clean outer surface of cranial impact shields with a damp cloth and a mild cleaning agent to remove all traces of grease, salt, or foreign substances.

2. Remove all traces of cleaning agent with a clean damp cloth. Dry with a clean dry cloth.

3. Examine all surfaces of cranial impact shields for obvious signs of cracks, soft portions, splits or other defects which would be cause for replacement of the item. Defective shields shall be disposed of in accordance with the proper directives.

4. The cranial impact shields shall be taped in accordance with NAVAIR 00-80T-105 (CV NATOPS).

5. Remove protective backing from reflective tape and place in desired position on helmet/visor housing surface. Avoid excessive stretching, air bubbles, and wrinkles. To obtain maximum adhesion, apply firm pressure to tape. Strip overlap should be minimized.

CAUTION

Application of any type of coating on top of reflective tape may decrease reflectivity.

6. Inspect tape installation and document in accordance with OPNAVINST 4790.2 Series.

7-29. PILE FASTENER TAPE INSTALLATION. Use following procedure to add pile fastener tape to the front cranial impact shield for attachment of the distress signal light SDU-5/E or SDU-39/N.

Materials Required

Quantity	Description	Reference Number
2 Inches	Fastener Tape, Pile, Type 1, 2-Inch Width	MIL-F-21840 NIIN 00-106-5973
As Required	Adhesive, Polychloroprene, Class 3	MIL-A-5540 NIIN 00-515-2246

NOTE

Use of any size or type pile tape available through local supply is authorized. Black or olive green are preferred colors.

Refer to Rescue and Survival Equipment, NAVAIR 13-1-6.5, for addition of hook tape to distress signal light.

1. Apply adhesive to a 2 x 2-inch area on left side of front cranial impact shield assembly where pile fastener tape is to be attached. Apply adhesive to underside of pile tape.

2. Allow adhesive to become tacky, approximately 15 minutes. Then press pile tape firmly onto prepared area on front cranial impact shield.

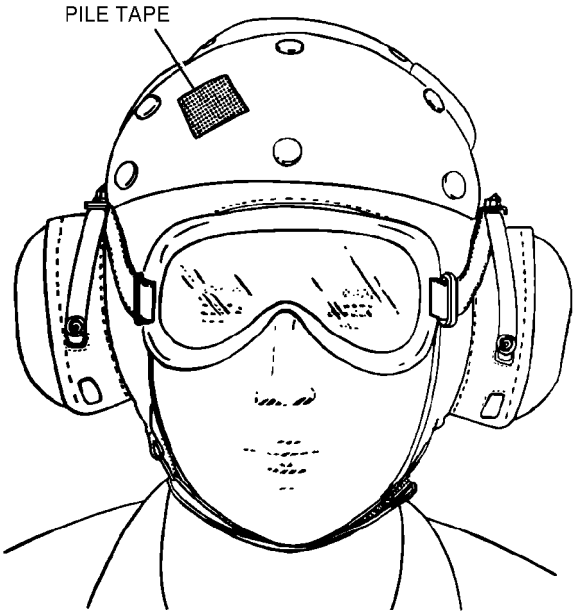

Step 2 - Para 7-23

7p23s2

3. Inspect pile fastener tape installation and document in accordance with OPNAVINST 4790.2 Series.

Section 7-4. Modifications

7-30. GENERAL.

7-31. Ensure that the HGU-24/P and HGU-25(V)2/P helmet assemblies have been updated in accordance with the directives listed in table 7-3.

Table 7-3. HGU-24/P and HGU-25(V)2/P Helmet Assembly Directives

Description of Modification	Application	Modification Code
Installation of Pile Tape on Helmet	All helmets	66-441

Section 7-5. Maintenance

7-32. GENERAL.

7-33. Proper care and use of the cloth helmet assemblies is essential to ensure optimum performance during routine and emergency operations. The users responsibility for maintenance of the cloth helmet is limited to general cleaning of the impact shields and attached protective goggles. Repairs or other maintenance actions required will be performed at the organizational level of maintenance or above. A special inspection shall be performed upon issue and at least every 90 days thereafter. All maintenance actions and inspections shall be documented in accordance with OPNAVINST 4790.2 Series maintenance manual. Repair, fabrication, and installation instructions to maintain the serviceability of the assemblies are listed in table 7-4.

7-34. INSPECTION.

NOTE

Defects or questionable areas noted during these inspections shall be referred to the proper maintenance activity for required corrective action.

General use ear plugs are inspected upon removal from packaging prior to use, if defects are noted discard and select another package.

7-35. PRE-OPERATION/POST-OPERATION INSPECTIONS. The Pre-operational and Post-operational inspections are performed by the person who has physical custody of the helmet assembly, and consists of a visual inspection for the overall integrity of the cloth helmet assembly. Refer to paragraph 7-36.

NOTE

General use ear plugs are normally a one time use item and are not subjected to a Special Inspection.

7-36. SPECIAL INSPECTION. The Special Inspection shall be conducted upon issue and every 90 days thereafter by Designated Qualified Personnel and shall consist of a visual inspection in accordance with paragraph 7-37, a functional check of the installed communications assembly and a thorough exterior cleaning of the assembly.

7-37. VISUAL INSPECTION. Visually inspect the cloth helmet assembly as follows:

1. Inspect chin strap for loose or broken stitching, fraying, security of attachment to cloth helmet and missing or damaged hook and pile fastener tape.

2. Inspect chinstrap-securing loop for security of attachment; check metal loop for corrosion.

3. Inspect impact shields for delamination, cracks, and broken/missing snap fastener hardware.

4. Inspect cloth helmet assembly for rips, tears, broken or missing stitching and overall condition.

5. Goggles should be inspected for deteriorated or damaged face seal, lens retention, loose or broken stitches on elastic headband, lenses for scratches and security of attachment to helmet assembly.

6. Muff microphone (HGU-24/P only) for loose or broken stitches on the retention strap, retention strap snap fastener for security of attachment and presence of corrosion.

7-38. FUNCTIONAL INSPECTION. Inspect the HGU-24/P headset using the TTU-489/E or standard shop procedures.

Table 7-4. Repairs/Replacements

Description of Repair/Replacement	Application	Paragraph
Replacement of Reflective Tape	All Cloth Helmet Assemblies	7-43
Replacement of Pile Fastener Tape	All Cloth Helmet Assemblies	7-44
Earphone Replacement (Sound Powered)	HGU-24/P	7-45
Microphone Replacement (Sound Powered)	HGU-24/P	7-46
Earseal Replacement	All Cloth Helmet Assemblies	7-47
Cloth Helmet Assembly Replacement	All Cloth Helmet Assemblies	7-48
Snap Fastener Tab Replacement	All Cloth Helmet Assemblies	7-49
Snap Fastener Stud and Post Replacement	All Cloth Helmet Assemblies	7-50
Goggle Replacement	All Cloth Helmet Assemblies	7-51

7-39. CLEANING.

NOTE

While general use ear plugs are normally a one time use item, if required to be worn for an extended period, ear plugs can be hand washed in warm soapy water to maintain personal hygiene standards.

7-40. To clean various parts of the cloth helmet assemblies, proceed as follows:

Materials Required

Quantity	Description	Reference Number
As Required	Detergent, Laundry	Commercial
As Required	Cloth, Lint-Free	MIL-C-85043 NIIN 00-165-7195
As Required	Plastic Polish	P-P-560 Type 1 NIIN 00-935-3794

1. HGU-24/P and HGU-25(V)2/P impact shields.

a. Clean impact shields using a mixture of warm water and mild detergent and a lint-free cloth.

b. Wipe impact shields with a clean lint-free cloth dampened with clear warm water to remove any detergent residue.

2. Cloth helmet assembly.

a. The cloth helmet assembly may be cleaned by machine washing in a solution of mild detergent and water.

b. Thoroughly rinse in clear water and allow to air dry.

3. Goggle lenses.

a. Clean lens with a solution of mild detergent and water using a lint-free cloth.

b. If lens is still soiled after washing, clean inner and outer surfaces with liquid plastic polish. After cleaning use a lint-free cloth to remove any polish residue.

7-41. REPLACEMENT OF CLOTH HELMET COMPONENTS.

7-42. The following procedures list the steps necessary to replace individual components of the cloth helmet assembly. Disassembly of the cloth helmet assembly shall be limited to the extent necessary to perform the required replacement. Refer to table 7-4 for listing of authorized replacements and fabrications.

7-43. REPLACEMENT OF REFLECTIVE TAPE. If replacement of installed reflective tape is required, proceed as follows:

Materials Required

Quantity	Description	Reference Number
As Required	Tape, Reflective:	
	White, 3-Inch Wide High Intensity	NIIN 01-078-8660 (Note 1)
	White, 6-Inch Wide	L-S-300, Class 3 NIIN 00-100-2153
	Orange, 1-Inch Wide	L-S-300, Class 1 NIIN 00-656-1494
	Orange, 3-Inch Wide	L-S-300, Class 1 NIIN 00-656-1186
As Required	Detergent, Mild	Commercial
As Required	Cloth, Lint-Free	MIL-C-85043 NIIN 00-165-7195
As Required	Alcohol, Isopropyl	TT-I-735 NIIN 00-655-8366

Notes: 1. The High Intensity grade white tape provides the greatest overall reflectivity and is optimum for visual detection. Submit requisitions for High Intensity grade tape to routing identifier code ZNC.

NOTE

Removal of reflective tape requires a considerable amount of care and patience. In some instances use of a heat gun may expedite tape removal.

1. Reflective tape removal.

a. To minimize damage to the outer surface of the impact shield, carefully work a beveled (not sharp) short blade putty knife under an edge of the tape, carefully stripping the reflective tape from the impact shield. Remove any adhesive residue with a lint-free cloth dampened with isopropyl alcohol.

2. Install new reflective tape in accordance with paragraph 7-28.

3. Inspect reflective tape installation and document in accordance with OPNAVINST 4790.2 series.

7-44. REPLACEMENT OF PILE FASTENER TAPE. To replace damaged or missing pile fastener tape, proceed as follows:

Materials Required

Quantity	Description	Reference Number
2-Inches	Fastener Tape, Pile, Type 1, 2-Inch Width	MIL-F-21840 NIIN 00-106-5973
As Required	Adhesive, Polychloroprene, Class 3	MIL-A-5540 NIIN 00-515-2246
As Required	Alcohol, Isopropyl	TT-I-735 NIIN 00-655-8366

Use of any size or type of pile tape available through local supply is authorized. Black or olive green, are the preferred colors.

1. Remove damaged/deteriorated pile fastener tape and remove any adhesive residue using isopropyl alcohol.

2. Apply adhesive to the 2 x 2-inch area on the left side of the front impact shield where pile fastener tape is to be attached. Apply a coat of adhesive to the underside of the pile tape patch.

3. Allow adhesive to become tacky, approximately 15 minutes, then press pile fastener tape patch firmly into position on the selected area of the impact shield.

4. Inspect pile tape installation and document in accordance with instructions in OPNAVINST 4790.2 series.

7-45. REPLACEMENT OF EARPHONE (HGU-24/P ONLY). To replace defective earphones, proceed as follows: TBD

7-46. REPLACEMENT OF MICROPHONE ELEMENT (HGU-24/P ONLY). To replace a defective microphone element, proceed as follows: TBD

7-47. EARSEAL REPLACEMENT. To replace worn or damaged earseals, proceed as follows:

Materials Required

Quantity	Description	Reference Number
1 PR	Cushion, Ear Elliptical	P/N 18316G-02 NIIN 01-415-6871

1. Remove worn/damaged earseals and discard.

2. Install replacement earseals onto eardomes by hooking them over one end of the eardome and carefully stretching them over the lip of the eardome.

7-48. CLOTH HELMET ASSEMBLY REPLACEMENT. To replace damaged/contaminated/deteriorated cloth helmet assemblies, proceed as follows:

Materials Required

Quantity	Description	Reference Number
1	Cloth helmet,	SPHPG1 NIIN 00-861-3527
	-or-	
1	Cloth Helmet	SPHPG2 NIIN 00-071-8785
	-or-	
1	Cloth Helmet	SPHPG3 NIIN 00-071-8786
	-or-	
1	Cloth Helmet	SPHPG4 NIIN 00-071-8787

NOTE

Cloth helmet assemblies that have become excessively soiled or have deteriorated to a condition where they are considered beyond economical repair shall be replaced.

1. (HGU-24/P) Detach microphone unit from headset assembly by disconnecting microphone U-173/U from headset U-172/U connector and unsnapping the lift-the-dot snap fasteners securing the microphone unit adjustment straps to the eardome stud support brackets.

2. Remove E-clips from eardome lugs, spread retention bands to release eardomes. Set E-clips aside for reuse.

NOTE

To facilitate removal of the impact shields, turn the strap with the snap fastener stud installed 180 degrees from its normal position and pull away from the dot.

3. Unsnap and remove front and back impact shields with attached pads from the cloth helmet assembly and set aside for reinstallation.

4. Remove earseals from eardomes and withdraw eardomes from the factory-fabricated openings on each side of the cloth helmet assembly.

5. Unsnap head-pad channel on top of cloth helmet, remove the headband assembly and discard cloth helmet assembly.

6. Using replacement cloth helmet assembly, insert the ear domes into the openings provided in the cloth helmet assembly, ensuring the ear dome lugs extend through the pre-fabricated slots in the left and right cloth helmet ear dome openings. (HGU-24/P) Ensure eardome support brackets extend through lower set of pre-fabricated slots.

7. Place headset assembly retention bands over the ear dome lugs and secure in place with retaining rings. With retention bands secured in place, replace earseals onto eardome lip.

8. Position the headset assembly head-pad into the pre-fabricated channel of the cloth helmet and secure in place using three snap fasteners provided.

NOTE

To facilitate securing the pull-the-dot snap fasteners during assembly of the impact shields to the cloth helmet, position the strap with the snap fastener stud installed, 90 degrees from its normal position, insert the outboard part of the stud into the socket, then press in the side of the stud under the dot.

9. Snap the impact shields to the cloth helmet. Ensure that head-pad cutouts are adjacent to each other at the top of the helmet assembly during assembly.

10. (HGU-24/P) Snap microphone unit adjustment straps to eardome support bracket snap fastener stud on each eardome then reconnect microphone U-173/U to headset U-172/U connector.

11. Inspect cloth helmet assembly replacement and document in accordance with OPNAVINST 4790.2 Series.

7-49. SNAP FASTENER TAB REPLACEMENT. To replace the snap fastener tab, proceed as follows: TBD

7-50. SNAP FASTENER STUD AND POST REPLACEMENT. To replace the snap fastener stud and post, proceed as follows: TBD

7-51. GOGGLE REPLACEMENT. To replace defective goggles, proceed as follows:

Materials Required

Quantity	Description	Reference Number
1	Goggle, Sun, Wind and Dust	MIL-G-43914 NIIN 01-328-8268
	-or-	
1	ESS Goggles	ESS01CB-NV NIIN 01-492-5720

Materials Required (Cont)

Quantity	Description	Reference Number

Notes: 1. ESS Goggles are commercially available from:
ESS Goggles, Incorporated
221 Northwood Way, Unit 200
Ketchum, ID
Telephone (208) 726-4072.

1. Unthread or unsnap left hand goggle retention strap of defective goggle and remove from cloth helmet assembly.

2. Unthread or unsnap left hand goggle retention strap and route free end of retention strap webbing rearward beneath headset retention band support, between cloth helmet assembly and rear impact shield foam pad, beneath retention band support on the opposite side, and through slot on side of goggle assembly.

3. Inspect goggle replacement and document in accordance with OPNAVINST 4790.2 series.

Section 7-6. Illustrated Parts Breakdown

7-52. GENERAL.

7-53. This section lists and illustrates the assemblies and detail parts of the HGU-24/P and HGU-25(V)2/P Cloth Helmet Assemblies as manufactured by David Clark Co., Inc. (CAGE 71483).

7-54. The IPB is intended for use in the identification, procurement, storing and issuing of replacement parts. It also illustrates disassembly and assembly relationships. Installation, operation and maintenance of these helmets shall only be performed by authorized personnel utilizing the instructions set forth in the preceding sections.

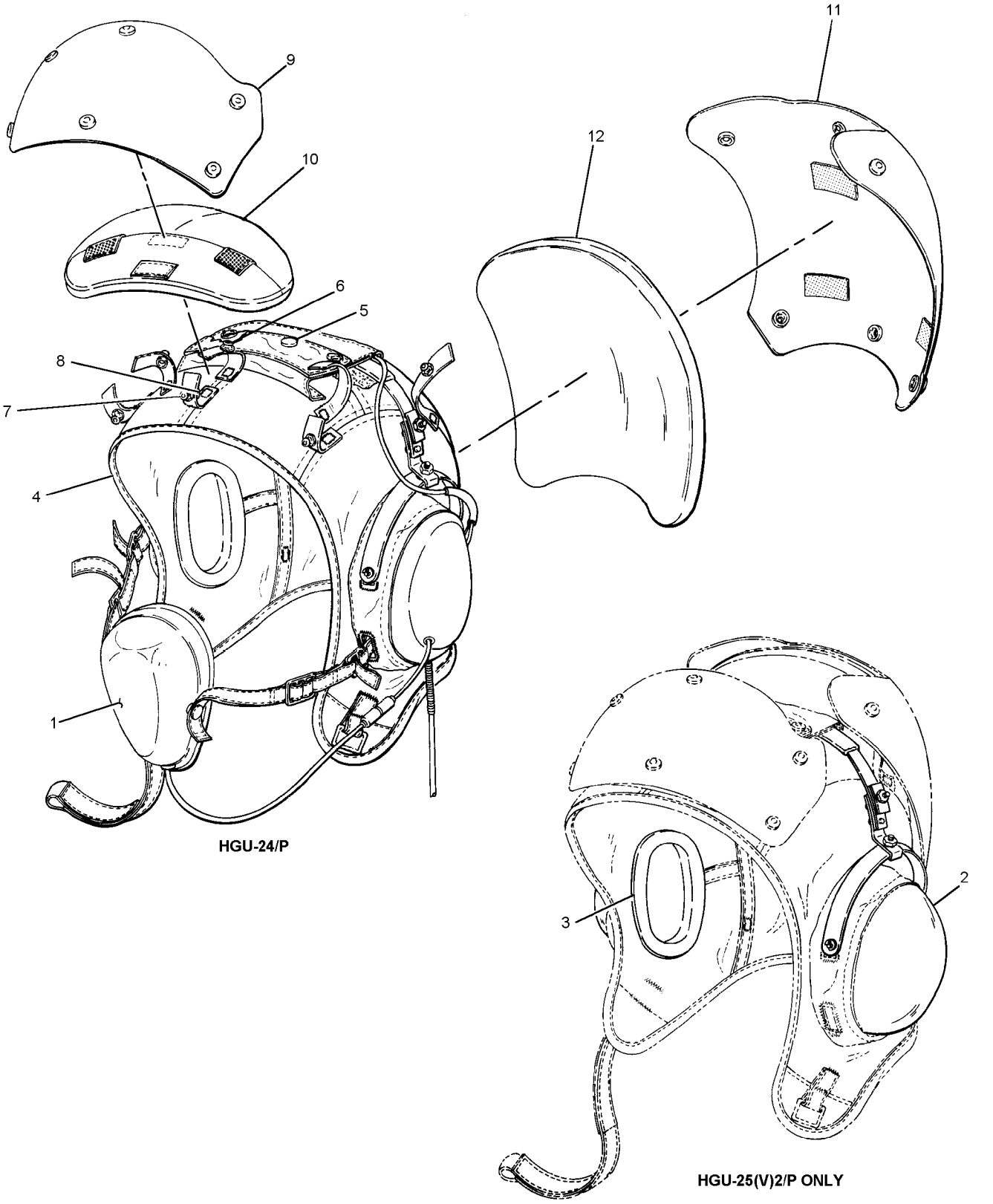

Figure 7-3. Cloth Helmet Assembly

Figure and Index Number	Part Number	Description 1 2 3 4 5 6 7	Units Per Assembly	Usable On Code
7-3	No Number	HGU-24/P CLOTH HELMET ASSEMBLY	1	A
	No Number	HGU-25(V)2/P CLOTH HELMET ASSEMBLY	1	B
-1	HSC61C	. HEAD SET ASSEMBLY, Sound powered . . . . . (CAGE 71483)	1	A
-2	372-9AN2	. AURAL SOUND PROTECTOR ASSEMBLY, ... (CAGE 71483) MIL-A-23899	1	B
-3	12192G-09	. . AURAL SOUND PROTECTOR SUPPORT, ... Ear Seal (CAGE 71483) (Note 1)	1	B
	SP2014	. . AURAL SOUND PROTECTOR SUPPORT, ... Ear Seal (CAGE 71483) (Alternate for 12192G-09) (Note 1)	1	B
	40863G-02	. . AURAL SOUND PROTECTOR SUPPORT, ... Gel Ear Seal (CAGE 71483) (Note 2)	1	B
	18316G-02	. . CUSHION, Ear, Elliptical	1	
-4	SPHPG1	. HELMET, Cloth, Size 6 3/4, (CAGE 71483)	1	
	SPHPG2	. HELMET, Cloth, Size 7, (CAGE 71483)	1	
	SPHPG3	. HELMET, Cloth, Size 7 1/4, (CAGE 71483)	1	
	SPHPG4	. HELMET, Cloth, Size 7 1/2, (CAGE 71483)	1	
-5	MS27981-3N	. . FASTENER, Socket	3	
-6	MS27981-5N	. . FASTENER, Eyelet	3	
-7	MS27983-3	. . FASTENER, Stud	12	
-8	MS27983-4	. . FASTENER, Eyelet	12	
-9	ASP332-2	. SHIELD ASSEMBLY, Cranial Impact, Front, ... Brown (CAGE 71483)	1	
	ASP332-3	. SHIELD ASSEMBLY, Cranial Impact, Front, ... Blue (CAGE 71483)	1	
	ASP332-4	. SHIELD ASSEMBLY, Cranial Impact, Front, ... Green (CAGE 71483)	1	
	ASP332-5	. SHIELD ASSEMBLY, Cranial Impact, Front, ... Red (CAGE 71483)	1	
	ASP332-6	. SHIELD ASSEMBLY, Cranial Impact, Front, ... Yellow (CAGE 71483)	1	
	ASP332-7	. SHIELD ASSEMBLY, Cranial Impact, Front, ... White (CAGE 71483)	1	
	ASP332-8	. SHIELD ASSEMBLY, Cranial Impact, Front, ... Purple (CAGE 71483)	1	
-10	ASP223	. FRONT PAD ASSEMBLY, Brown . . . . . (CAGE 71483)	1	
-11	ASP333-2	. SHIELD ASSEMBLY, Cranial Impact, Back, ... Brown (CAGE 71483)	1	
	ASP333-3	. SHIELD ASSEMBLY, Cranial Impact, Back, ... Blue (CAGE 71483)	1	
	ASP333-4	. SHIELD ASSEMBLY, Cranial Impact, Back, ... Green (CAGE 71483)	1	
	ASP333-5	. SHIELD ASSEMBLY, Cranial Impact, Back, ... Red (CAGE 71483)	1	
	ASP333-6	. SHIELD ASSEMBLY, Cranial Impact, Back, ... Yellow (CAGE 71483)	1	
	ASP333-7	. SHIELD ASSEMBLY, Cranial Impact, Back, ... White (CAGE 71483)	1	

Figure and Index Number	Part Number	Description 1 2 3 4 5 6 7	Units Per Assembly	Usable On Code
7-3-11 (cont)	ASP333-8	. SHIELD ASSEMBLY, Cranial Impact, Back, ... Purple (CAGE 71483)	1	
-12	ASP222	. BACK PAD ASSEMBLY, Brown . . . . . (CAGE 71483)	1	
	MIL-G-43914	GOGGLES, Sun, Wind, Dust (NIIN 01-328-8268) . . . (Not Illustrated)	1	
	ESS01CB-NV	GOGGLES, ESS (Not Illustrated)	1	
	Notes: 1. This is the only part to support the Aural Protector that is presently carried in the supply system. 2 Open purchase from: David Clark Co. Inc. 360 Franklin St Box 15054, Worcester, MA 01615 Tel (508) 756-6216			

NUMERICAL INDEX

Part Number	Figure and Index Number	SM&R Code
ASP222	7-3-12	PAOZZ
ASP223	7-3-10	PAOZZ
ASP332-2	7-3-9	PAGGZ
ASP332-3	7-3-9	PAGGZ
ASP332-4	7-3-9	PAGGZ
ASP332-5	7-3-9	PAGGZ
ASP332-6	7-3-9	PAGGZ
ASP332-7	7-3-9	PAGGZ
ASP332-8	7-3-9	PAGGZ
ASP333-2	7-3-11	PAGGZ
ASP333-3	7-3-11	PAGGZ
ASP333-4	7-3-11	PAGGZ
ASP333-5	7-3-11	PAGGZ
ASP333-6	7-3-11	PAGGZ
ASP333-7	7-3-11	PAGGZ
ASP333-8	7-3-11	PAGGZ

Part Number	Figure and Index Number	SM&R Code
EES01CB-NV	7-3-	
HSC61C	7-3-1	PAOGG
MIL-G-43914	7-3-	
MS27981-3N	7-3-5	PAOZZ
MS27981-5N	7-3-6	PAOZZ
MS27983-3	7-3-7	PAOZZ
MS27983-4	7-3-8	PAOZZ
SPHPG1	7-3-4	PAOZZ
SPHPG2	7-3-4	PAOZZ
SPHPG3	7-3-4	PAOZZ
SPHPG4	7-3-4	PAOZZ
SP2014	7-3-3	PAOZZ
12192G-09	7-3-3	PAOZZ
372-9AN2	7-3-2	PAOZZ
40863G-02	7-3-3	XDOZZ

THIS PAGE INTENTIONALLY LEFT BLANK.

CHAPTER 8

AUXILIARY PERSONAL EQUIPMENT

Section 8-1. Description

8-1. GENERAL.

8-2. Auxiliary Personal Equipment covered by this chapter consists of items of equipment worn or used by aircrew personnel to enhance operations within the aircraft and/or personal safety.

Section 8-2. Boom Microphone Light, ML-8

8-3. GENERAL.

8-4. The ML-8 Boom Microphone Light, hereinafter referred to as the lip lite, is optional equipment to be installed in accordance with ACC 620 if desired by the aircrewmember. The lip lite provides a hands-free alternate means of obtaining cockpit lighting during night operations.

8-5. CONFIGURATION.

8-6. The lip lite is a self-contained assembly drawing its power from a battery unit attached to the helmet.

8-7. APPLICATION.

8-8. The lip light is authorized as optional equipment on helmets used in rotary wing aircraft, fixed wing non-ejection seat aircraft, and helmets used by pilot and COTAC aircrewmembers of S-3 series aircraft. Helmets involved are the HGU-67, HGU-68, HGU-84, and HGU-85.

8-9. INSTALLATION.

8-10. The ML-8 lip lite is installed as follows:

Materials Required

Quantity	Description	Reference Number
1	Microphone Light Kit	ML-8
	-or-	
1	Lip Lite	NIIN 01-362-4902
2	Battery, AA	NIIN 00-985-7845
1	Tiedown Strap	MS3367-4-9 NIIN 00-727-5133
As Required	Fastener, Pile Tape	MIL-F-21830 NIIN 01-033-1735
As Required	Fastener, Hook Tape	MIL-F-21840 NIIN 01-033-1734
1	Battery Bag	BG-AA (COML)
1	Battery Holder	ML2-7 (COML)

1. Attach lip lite to boom mike bracket using pivot screw provided in kit.

2. Place pile tape on microphone.

3. Place hook tape on lip lite.

4. Attach battery bag on rear of helmet using hook and pile tape provided in kit.

5. For added security route tiedown strap over top of microphone and through hole in top of lip lite. Remove excess strap.

6. Conduct appropriate test and/or operational check upon completion of modification/installation.

8-11. MAINTENANCE.

8-12. Maintenance requirements of the lip lite shall be limited to replacement of parts and inspection. All maintenance actions shall be documented in accordance with OPNAVINST 4790.2 Series.

8-13. INSPECTION. Inspection shall consist of visual type Preflight/Postflight and Special Inspections.

8-14. Preflight/Postflight Inspection. The lip lite shall be inspected during the Preflight/Postflight inspection of the helmet on which it is installed by the aircrewmember to whom the helmet is assigned.

8-15. Special Inspection. Special Inspection of the lip lite shall be performed every 90 days in conjunction with 90-day inspection requirements of the helmet on which it is installed. The inspection shall be performed at organizational maintenance level and shall consist of a visual inspection and functional check of the lip lit.

8-16. Visual Inspection. The visual inspection of the lip lite is performed as follows:

1. Check function of lip lite.

2. Check security of attachment of connections and components.

3. Check batteries and battery holder for corrosion.

4. Inspect battery bag and electrical wire for cuts, tears, and abrasions.

Section 8-3. Parachutist Goggles

8-17. GENERAL.

8-18. The parachutist goggles are worn beneath the helmet visor to provide added eye protection when conducting air operations in areas of high concentrations of dust, ash, or sand. Authorized goggles are available through normal supply channels or open purchase from commercial sources.

8-19. CONFIGURATION.

8-20. Sky Eye goggles, P/N 91-8854, and Headlights goggles, P/N GTX-H11, incorporate a lexan polycarbonate lens with a urethane face seal and are worn over the outside of the HGU-84/P series protective helmet. The goggles fit well into the facial cavity of the helmets under the visor and provide an airtight seal around the eyes. The Zan anti-fog goggles (Cruiser model), P/N BCA001C, and (Bugey2 model), P/N BA2001C, incorporate a clear polycarbonate lens within a rigid plastic frame with a urethane face seal. The Zan goggles are worn around the head, under the HGU-84/P series protective helmets. The Zan goggles are authorized for non-pilot aircrew members only. The Zan anti-fog goggles, like the parachutist goggles, are compatible with the facial cavity of the helmets and are worn under the visor providing an airtight seal around the eyes. The Gentex goggles, P/N G022-4607-02, also come with a clear polycarbonate lens and urethane face seal, providing an airtight seal around the eyes. The Gentex goggles, however, may be snapped directly to the helmet in place of the visor or the goggle straps may be altered to permit concurrent use of the visor and goggles. The ESS goggles, P/N ESS01CB-NV, can be worn either under the helmet or over the outside of the helmet.

8-21. APPLICATION.

8-22. Parachutist goggles are intended for use by fixed-wing and rotary-wing USN/USMC aircrewmembers when required to conduct air operations in areas of high concentrations of dust, ash, or sand.

8-23. SIZING.

8-24. The Parachutist goggles are available in one universal size. Gentex goggles, P/N G022-4607-02, and ESS goggles, P/N ESS01CB-NV, are available through normal supply channels under NIIN 01-289-2831 and NIIN 01-492-5720 respectively. The commercial sources for Sky goggles, P/N 91-8854, Headlights goggles, P/N GTX-H11, and Zan goggles (Cruiser model), P/N BCA001C and (Bugey2 model), P/N BA2001C are:

Sky Eyes Limited
6469 Magnolia Court
Englewood, CO 80111
Telephone (303) 779-9042
FAX (303) 722-2782

Headlights Goggle
9 Numbers International Inc.
Telephone 1-800-653-9003
FAX (717) 865-0242

Zan Headgear
5629 Copley Drive
San Diego, CA 92111
Telephone 1-800-603-2662, Ext. 1303
FAX (858) 715-0066

8-25. MODIFICATIONS.

8-26. There are no current directives affecting the parachutist goggles.

8-27. MAINTENANCE.

8-28. Maintenance of the parachutist goggles shall consist of inspection, cleaning, and necessary repairs at the organizational level. Maintenance and inspection actions shall be documented in accordance with OPNAVINST 4790.2 Series.

8-29. INSPECTION. Inspections shall consist of Acceptance/Special, Preflight, and Postflight performed at the organizational level. Inspections shall be visual inspections in accordance with paragraph 8-32.

8-30. Acceptance/Special Inspection. This inspection shall be performed by an Aircrew Survival Equipmentman prior to issue and every 90 days thereafter.

8-31. Preflight/Postflight Inspection. The preflight and postflight inspections shall be performed before and after each flight by the aircrewmember to whom the goggles are assigned.

8-32. Visual Inspection. The visual inspection of the parachutist goggles shall be performed as follows:

1. Lens for scratches, abrasions, pitting, and cleanliness.

2. Straps for cuts, tears, and chafing.

3. Face seal for adhesion to lens, cuts, rips, and deterioration.

4. Snap fasteners for security of attachment, corrosion, and operation.

5. Discrepancies noted shall be documented and the goggles turned in for maintenance action.

8-33. SERVICE LIFE. The parachutist goggles shall remain in service until damaged beyond economical repair.

8-34. CLEANING. Cleaning of the goggles shall be performed by the aircrewmember to whom assigned or the Aircrew Survival Equipmentman prior to issue as follows:

Materials Required

Quantity	Description	Reference Number
As Required	Plastic Polish, Type I	P-P-560 NIIN 01-133-5375

CAUTION

Do not use solvent or hot water on goggles.

1. Light scratches may be removed using plastic polish, P-P-560, in accordance with instructions on the container.

2. Remove dust and fingerprints by first rinsing with clear warm water then wash with warm soapy water or steaming with breath.

3. Dry with clean, soft cloth, or soft tissue.

8-35. REPAIRS/REPLACEMENT/FABRICATIONS. Repair, replacement, and fabrication maintenance shall be performed by an Aircrew Survival Equipmentman. Repairs, replacement, and/or fabrications shall include but are not limited to the following:

8-36. Minor Repairs.

Materials Required

Quantity	Description	Reference Number
As Required	Adhesive, Polychloroprene, Class 3	MIL-A-5540 NIIN 00-515-2246
As Required	Cap, Snap Fastener	MS27983-1 NIIN 00-891-9073
As Required	Socket, Snap Fastener	MS27983-2 NIIN 00-945-2577

1. Re-cement loose or detached face seal.

a. Apply adhesive to underside of face seal and goggle edge.

b. Allow adhesive to become tacky (approximately 15 minutes).

c. Press face seal firmly onto goggle.

2. Replace damaged or missing snap fasteners using standard shop procedures.

8-37. Fabrication/Replacement. Fabricate and/or replacement of parachutist goggle dual snap fastener strap for combined use of goggle and HGU-84/P or HGU-67/P helmet visor.

Materials Required

Quantity	Description	Reference Number
As Required	Webbing, Cotton Elastic, Black, Type I, Class I, 3/4-Inch	MIL-W-5664 NIIN 00-432-8179
As Required	Thread, Nylon, Size E, Sage Green	V-T-295 NIIN 00-204-3884
2	Socket, Snap Fastener	MS27983-2N NIIN 00-486-7929

Materials Required (Cont)

Quantity	Description	Reference Number
2	Stud, Snap Fastener	MS27983-3 NIIN 00-276-4908
4	Post, Snap Fastener	MS27983-4 NIIN 00-276-4978

CAUTION

Use care when removing cap and socket fasteners. Do not damage adjustment straps.

1. Using end cutters or diagonal cut pliers, remove existing snap fastener cap and socket from right and left goggle adjustment straps and discard.

2. Cut two 5 1/2-inch lengths of elastic webbing and fold each length in half. At center of webbing one inch from folded end, cut a hole through folded webbing using rotary punch.

3. Unfold webbing, then using post (MS27983-4), install socket (MS27983-2N) and stud (MS27983-3) facing upward on each webbing length.

4. With right hand goggle adjustment strap laid out flat, fold elastic webbing over end of adjustment strap where snap fastener was removed. Align installed fasteners, with socket positioned inward, over hole created by removal of original fastener.

NOTE

All stitching shall be Type 301 lockstitch, 7 to 10 stitches per inch with minimum 1/2-inch backstitch.

a. Maintaining snap fastener alignment, sew elastic webbing onto adjustment strap using three rows of stitches 1/8 inch apart positioned as close as practical to right and left side of installed snap fasteners.

b. Fold cut ends of elastic webbing under 1/4 inch and secure to adjustment strap using two rows of stitches 1/8 inch apart.

5. Repeat procedure on left adjustment strap, ensuring socket is positioned inward.

Section 8-4. Microphone Mount on T-Bayonet

8-38. GENERAL.

8-39. The Microphone Mount on T-Bayonet (hereinafter referred to as bayonet mic mount) is optional equipment for use by T-34 series instructor pilots who already have HGU-68/P helmets. The bayonet mic mount provides a means of utilizing a boom microphone without having to permanently affix a boom microphone mount to the helmet.

8-40. CONFIGURATION.

8-41. The bayonet mic mount, P/N 8322, is available as an open purchase item from:

Flight Suits
1675 Pioneer Way
El Cajon, CA 92020
Telephone 800-748-6693
www.flightsuits.com

8-42. APPLICATION.

8-43. The bayonet mic mount is intended for use by T-34 series instructor pilots whose previously issued HGU-68/P helmets already have bayonet receivers and who do not wish to permanently affix a boom microphone mount to their helmet.

8-44. INSTALLATION.

8-45. INSTALLATION OF BOOM MICROPHONE ONTO BAYONET MIC MOUNT.

1. Remove outer pan head screw from the knurled nut of the boom swivel assembly.

2. Remove the knurled nut from the boom swivel assembly by twisting it counterclockwise.

3. Remove the serrated washer and upper half of boom adapter.

4. Place boom microphone assembly between the inner and outer boom adapters, ensuring that the boom is aligned in the adapter grooves. Hold parts together.

5. Install the boom microphone and adapters; install the serrated washer with serration inboard. Install the knurled nut with the countersink outboard. Tighten the knurled knob. Secure the pan head screw.

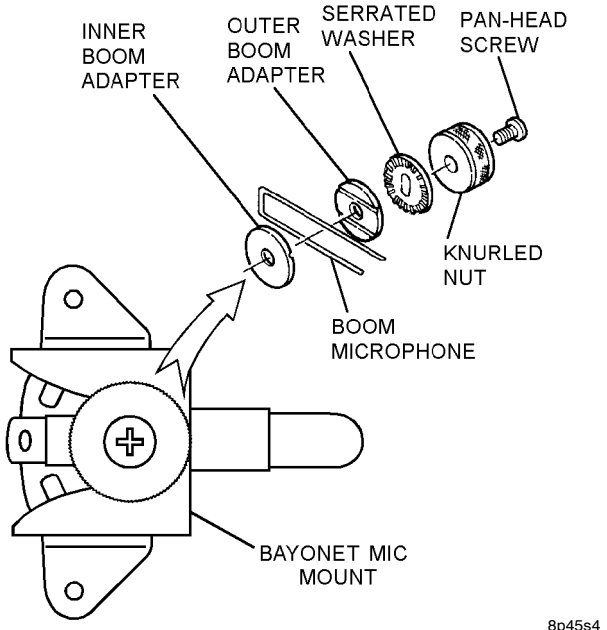

Steps 4 and 5 - Para 8-45

8-46. MAINTENANCE.

8-47. Maintenance requirements of the bayonet mic mount shall be limited to replacement of parts and inspection. All maintenance actions shall be documented in accordance with OPNAVINST 4790.2.

8-48. INSPECTION. Inspection shall consist of Preflight/Postflight and Special Inspections.

8-49. Preflight/Postflight Inspections. The Preflight/Postflight Inspections consist of a visual inspection.

8-50. Special Inspection. The Special Inspection consists of a visual inspection.

THIS PAGE INTENTIONALLY LEFT BLANK.

APPENDIX A

THE METRIC SYSTEM AND METRIC UNIT CONVERSION CHARTS

The Metric System simply and logically coordinates the measurements of length, area, volume, and mass into one decimalized system. United States currency, with its unexcelled convenience, was the first large scale national use of a decimal system. The ratio between the units of the series - dollars, dimes, cents, and mills - is ten. Additions and other numerical operations are simple. Calculations with metric units require no conversion from unit to unit, as for example between inches and feet or ounces and pounds.

In the Metric System there is one series of units for length, one for area, one for volume or capacity, one for mass, and one for temperature.

LENGTH - The common metric units of length are the millimeter (mm) for small dimensions, the centimeter (cm) for daily practical use, the meter (m) for expressing dimensions of larger objects and short distances and the kilometer (km) for longer distances. The centimeter is about four-tenths of an inch. The meter is about forty inches and the kilometer about six-tenths of a mile (figure A-1). When drawing to metric scale, engineering and product dimensions are in millimeters. Architectural drawings can be in millimeters or centimeters. On land surveys the unit is the meter. On maps the kilometer is the unit of measurement.

AREA - Small areas are usually measured in square centimeters (cm^2). In building and construction the square meter (m^2) is used and is about 20 percent larger than a square yard. The hectare (ha) is used for land surveys and is about 2.5 acres.

VOLUME - For volume the most convenient unit is the cubic decimeter (dm^3), referred to as the liter (l). The liter is slightly larger than the U.S. liquid quart but smaller than the U.S. dry quart and the British Imperial quart. The preferred unit for dispensing unit for dispensing drugs and for scientific work is the cubic centimeter (cm^3) or milliliter (ml) as it is also called. For measuring amounts of concrete and excavations the cubic meter (m^3) is used.

MASS - In pharmaceutical and scientific work the gram (g) is the most convenient unit. There are slightly less than 30 grams in one avoirdupois ounce. For most other uses the kilogram (kg) is convenient and is approximately 2.2 pounds. The metric ton (t), 1000 kg, is used for farm commodities, minerals, and large shipments. It is convenient that a liter of pure water at standard temperature and pressure has a mass of one kilogram (discrepancy less than one part in 10,000). This relationship makes it easy to determine the mass of any known volume of water, or of any other liquid if its specific gravity is known.

TEMPERATURE - All countries using the Metric System of weights and measures also use the Celsius (C) scale (formerly called centigrade) for ordinary measurement of temperature. On the Celsius scale pure water at standard atmospheric pressure freezes at 0 and boils at 100. Normal human body temperature is 37°, while a comfortable room temperature is about 22°. The preferred temperature scale for engineering and physics is the kelvin (K) which has the same units as the Celsius and where the freezing point of pure water is 273.15 K.

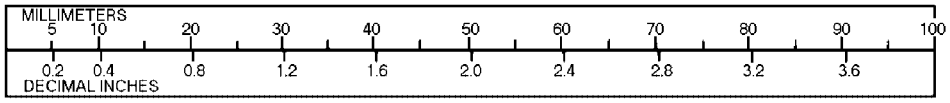

1 Millimeter = 0.03937 Inch Scale - 1 Centimeter = 5 Millimeters

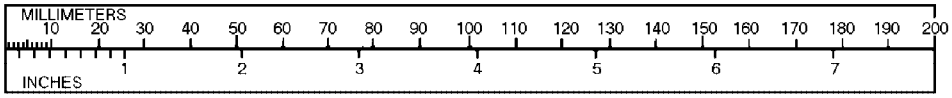

1 Inch = 25.4 Millimeters Scale - 1 Centimeter = 10 Millimeters

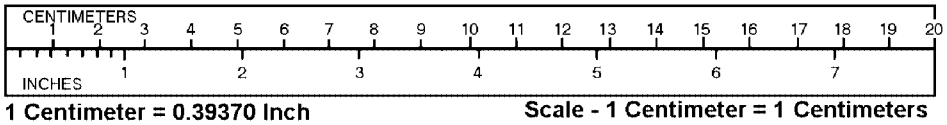

1 Centimeter = 0.39370 Inch Scale - 1 Centimeter = 1 Centimeters

1 Inch = 2.54 Centimeters

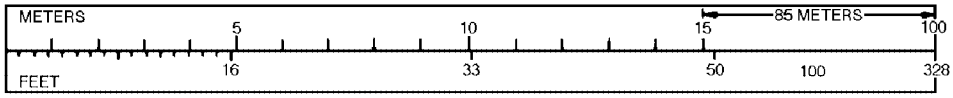

Scale - 1 Centimeter = 1 Meter 1 Foot = 0.3048 Meter

1 Meter = 3.28083 Feet (39.37 Inches - Act of Congress 1866)

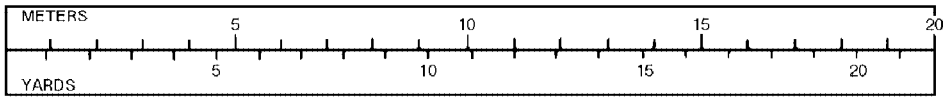

1 Meter = 1.09361 Yards 1 Yard = 0.9144 Meter Scale - 1 Centimeter = 1 Meter

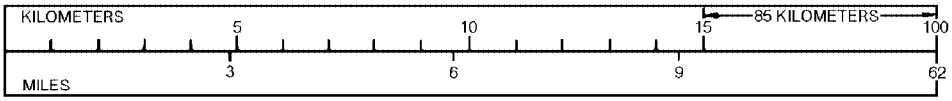

1 Kilometer = 0.62137 Mile Scale - 1 Centimeter = 1 Kilometer

Mile = 1.6093 Kilometers

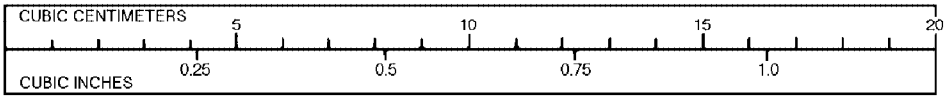

1 Cubic Centimeter = 0.061 Cubic Inch Scale - 1 Centimeter = 1 Cubic Centimeter

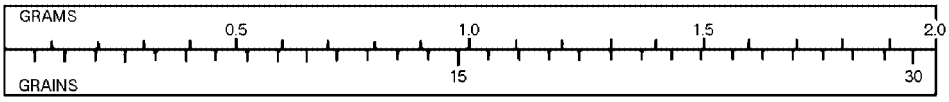

1 Gram = 15.4324 Grains Scale - 1 Centimeter = 0.1 Gram

A-1-1

Figure A-1. Reference Conversion Charts (Sheet 1 of 2)

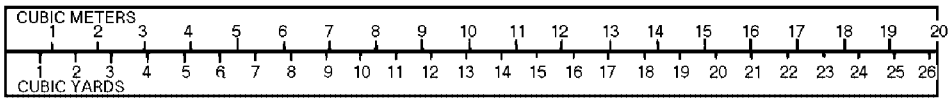

1 Cubic Meter = 1.30795 Cubic meter **Scale - 1 Centimeter = 1 Cubic Meter**

1 Cubic Yard = 0.76455 Cubic meter

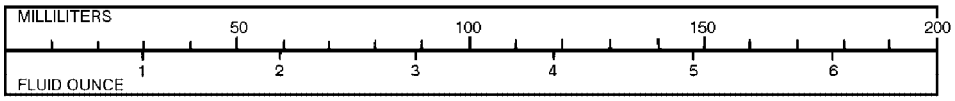

1 Milliliter = 0.03381 Fluid Ounce **Scale - 1 Centimeter = 10 Milliliter**

1 Fluid Ounce = 29.57 Milliliters

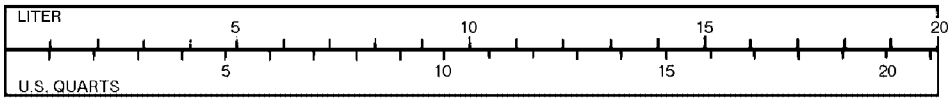

1 Liter = 1.0567 U.S. Quarts 1 U.S. Quart = 0.9463 Liter Scale - 1 Centimeter = 1 Liter

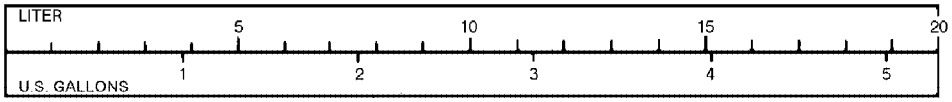

1 Liter = 0.26418 U.S. Gallon **Scale - 1 Centimeter = 1 Liter**

1 U.S. Gallon = 3.7853 Liters

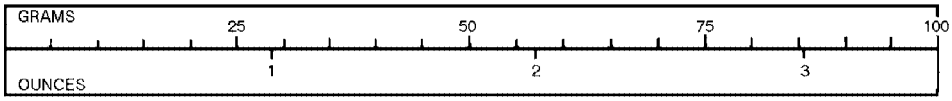

1 Avoirdupois ounce = 28.3495 Grams **Scale - 1 Centimeter = 5 Grams**

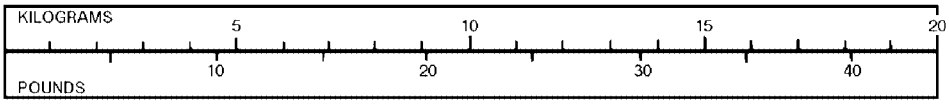

1 Kilogram = 2.2045 Pounds **Scale - 1 Centimeter = 1 Kilogram**

1 Pound = 0.45359 Kilogram

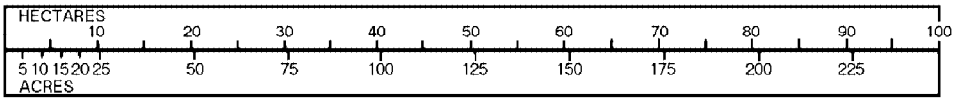

1 Hectare = 2.47105 Acres **Scale - 1 Centimeter = 5 Hectares**

1 Acres = 0.40489 Hectares **40 Acres = 16.19 Hectares**

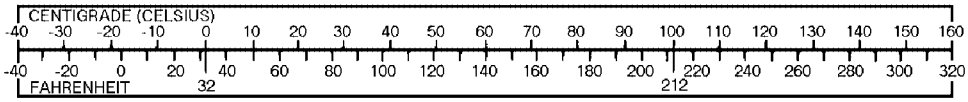

Fahrenheit = 9/5 Centigrade plus 32 **Scale - 1 Centigrade = 10° Centigrade**

Centigrade = Fahrenheit minus 32 x 5/9

A-1-2

Figure A-1. Reference Conversion Charts (Sheet 2 of 2)

Table A-1. Symbols and Relationships of Metric Units

Quantity	Unit (Note 1)	Symbol	Relationship of Units
Length	millimeter centimeter decimeter meter (Note 2) kilometer	mm cm dm m km	1 mm = 0.001 m 1 cm = 10 mm 1 dm = 10 cm 1 m = 100 cm 1 km = 1000 m
Area	square centimeter square decimeter square meter (Note 2) are hectare square kilometer	cm^2 dm^2 m^2 a ha km^2	1 cm^2 = 100 mm^2 1 dm^2 = 100 cm^2 1 m^2 = 100 dm^2 1 a = 100 m^2 1 ha = 100 a 1 km^2 = 100 ha
Volume	cubic centimeter millimeter cubic decimeter liter cubic meter (Note 2)	cm^3 ml dm^3 l m^3	1 cm^3 } = 0.001 l 1 ml 1 dm^3 } = 1000 ml 1 l 1 m^3 = 1000 l
Mass*	milligram gram kilogram (Note 2) metric ton	mg g kg t	1 mg = 0.001 g 1 g = 1000 mg 1 kg = 1000 g 1 t = 1000 kg

*Mass is the quantity of matter. Weight is a force Earth's attraction for a given mass. Generally the term mass is meant when we use weight.

Notes:
1. The three main units; meter liter and gram can be changed to more convenient sized units for specific purposes by means of several well known prefixes. Milli means 1/1000. Centi means 1/100. Deci means 1/10. Kilo means 1000. One merely learns the main units and the value of the most commonly used prefixes. The symbols for metric units are the same for single and plural amounts and are not followed by a period. Rates are usually shown by use of the slash as in m/s.
2. The underlined units in this table are basic or derived units of the International System of Units (SI).

Table A-2. Inches to Millimeters Conversion Chart

Inch	mm	Inch	mm	Inch	mm	Inch	mm	Inch	mm
.001	0.0254	.051	1.2954	.101	2.5654	.151	3.8354	.201	5.1054
.002	0.0508	.052	1.3208	.102	2.5908	.152	3.8608	.202	5.1308
.003	0.0762	.053	1.3462	.103	2.6162	.153	3.8862	.203	5.1562
.004	0.1016	.054	1.3716	.104	2.6416	.154	3.9116	.204	5.1816
.005	0.1270	.055	1.3970	.105	2.6670	.155	3.9370	.205	5.2070
.006	0.1524	.056	1.4224	.106	2.6924	.156	3.9624	.206	5.2324
.007	0.1778	.057	1.4478	.107	2.7178	.157	3.9878	.207	5.2578
.008	0.2032	.058	1.4732	.108	2.7432	.158	4.0132	.208	5.2832
.009	0.2286	.059	1.4986	.109	2.7686	.159	4.0386	.209	5.3086
.010	0.2540	.060	1.5240	.110	2.7940	.160	4.0640	.210	5.3340
.011	0.2794	.061	1.5494	.111	2.8194	.161	4.0894	.211	5.3594
.012	0.3048	.062	1.5748	.112	2.8448	.162	4.1148	.212	5.3848
.013	0.3302	.063	1.6002	.113	2.8702	.163	4.1402	.213	5.4102
.014	0.3556	.064	1.6256	.114	2.8956	.164	4.1656	.214	5.4356
.015	0.3810	.065	1.6510	.115	2.9210	.165	4.1910	.215	5.4610
.016	0.4064	.066	1.6764	.116	2.9464	.166	4.2164	.216	5.4864
.017	0.4318	.067	1.7018	.117	2.9718	.167	4.2418	.217	5.5118
.018	0.4572	.068	1.7272	.118	2.9972	.168	4.2672	.218	5.5372
.019	0.4826	.069	1.7526	.119	3.0226	.169	4.2926	.219	5.5626
.020	0.5080	.070	1.7780	.120	3.0480	.170	4.3180	.220	5.5880
.021	0.5334	.071	1.8034	.121	3.0734	.171	4.3434	.221	5.6134
.022	0.5588	.072	1.8288	.122	3.0988	.172	4.3688	.222	5.6388
.023	0.5842	.073	1.8542	.123	3.1242	.173	4.3942	.223	5.6642
.024	0.6096	.074	1.8796	.124	3.1496	.174	4.4196	.224	5.6896
.025	0.6350	.075	1.9050	.125	3.1750	.175	4.4450	.225	5.7150
.026	0.6604	.076	1.9304	.126	3.2004	.176	4.4704	.226	5.7404
.027	0.6858	.077	1.9558	.127	3.2258	.177	4.4958	.227	5.7658
.028	0.7112	.078	1.9812	.128	3.2512	.178	4.5212	.228	5.7912
.029	0.7366	.079	2.0066	.129	3.2766	.179	4.5466	.229	5.8166
.030	0.7620	.080	2.0320	.130	3.3020	.180	4.5720	.230	5.8420
.031	0.7874	.081	2.0574	.131	3.3274	.181	4.5974	.231	5.8674
.032	0.8128	.082	2.0828	.132	3.3528	.182	4.6228	.232	5.8928
.033	0.8382	.083	2.1082	.133	3.3782	.183	4.6482	.233	5.9182
.034	0.8636	.084	2.1336	.134	3.4036	.184	4.6736	.234	5.9436
.035	0.8890	.085	2.1590	.135	3.4290	.185	4.6990	.235	5.9690
.036	0.9144	.086	2.1844	.136	3.4544	.186	4.7244	.236	5.9944
.037	0.9398	.087	2.2098	.137	3.4798	.187	4.7498	.237	6.0198
.038	0.9652	.088	2.2352	.138	3.5052	.188	4.7752	.238	6.0452
.039	0.9906	.089	2.2606	.139	3.5306	.189	4.8006	.239	6.0706
.040	1.0160	.090	2.2860	.140	3.5560	.190	4.8260	.240	6.0960
.041	1.0414	.091	2.3114	.141	3.5814	.191	4.8514	.241	6.1214
.042	1.0668	.092	2.3368	.142	3.6068	.192	4.8768	.242	6.1468
.043	1.0922	.093	2.3622	.143	3.6322	.193	4.9022	.243	6.1722
.044	1.1176	.094	2.3876	.144	3.6576	.194	4.9276	.244	6.1976
.045	1.1430	.095	2.4130	.145	3.6830	.195	4.9530	.245	6.2230
.046	1.1684	.096	2.4384	.146	3.7084	.196	4.9784	.246	6.2484
.047	1.1938	.097	2.4638	.147	3.7338	.197	5.0038	.247	6.2738
.048	1.2192	.098	2.4892	.148	3.7592	.198	5.0292	.248	6.2992
.049	1.2446	.099	2.5146	.149	3.7846	.199	5.0546	.249	6.3246
.050	1.2700	.100	2.5400	.150	3.8100	.200	5.0800	.250	6.3500

Inch	mm	Inch	mm	Inch	mm	Inch	mm	Inch	mm
.251	6.3754	.301	7.6454	.351	8.9154	.401	10.1854	.451	11.4554
.252	6.4008	.302	7.6708	.352	8.9408	.402	10.2108	.452	11.4808
.253	6.4262	.303	7.6962	.353	8.9662	.403	10.2362	.453	11.5062
.254	6.4516	.304	7.7216	.354	8.9916	.404	10.2616	.454	11.5316
.255	6.4770	.305	7.7470	.355	9.0170	.405	10.2870	.455	11.5570
.256	6.5024	.306	7.7724	.356	9.0424	.406	10.3124	.456	11.5824
.257	6.5278	.307	7.7978	.357	9.0678	.407	10.3378	.457	11.6078
.258	6.5532	.308	7.8232	.358	9.0932	.408	10.3632	.458	11.6332
.259	6.5786	.309	7.8486	.359	9.1186	.409	10.3886	.459	11.6586
.260	6.6040	.310	7.8740	.360	9.1440	.410	10.4140	.460	11.6840
.261	6.6294	.311	7.8994	.361	9.1694	.411	10.4394	.461	11.7094
.262	6.6548	.312	7.9248	.362	9.1948	.412	10.4648	.462	11.7348
.263	6.6802	.313	7.9502	.363	9.2202	.413	10.4902	.463	11.7602
.264	6.7056	.314	7.9756	.364	9.2456	.414	10.5156	.464	11.7856
.265	6.7310	.315	8.0010	.365	9.2710	.415	10.5410	.465	11.8110
.266	6.7564	.316	8.0264	.366	9.2964	.416	10.5664	.466	11.8364
.267	6.7818	.317	8.0518	.367	9.3218	.417	10.5918	.467	11.8618
.268	6.8072	.318	8.0772	.368	9.3472	.418	10.6172	.468	11.8872
.269	6.8326	.319	8.1026	.369	9.3726	.419	10.6426	.469	11.9126
.270	6.8580	.320	8.1280	.370	9.3980	.420	10.6680	.470	11.9380
.271	6.8834	.321	8.1534	.371	9.4234	.421	10.6934	.471	11.9634
.272	6.9088	.322	8.1788	.372	9.4488	.422	10.7188	.472	11.9888
.273	6.9342	.323	8.2042	.373	9.4742	.423	10.7442	.473	12.0142
.274	6.9596	.324	8.2296	.374	9.4996	.424	10.7696	.474	12.0396
.275	6.9850	.325	8.2550	.375	9.5250	.425	10.7950	.475	12.0650
.276	7.0104	.326	8.2804	.376	9.5504	.426	10.8204	.476	12.0904
.277	7.0358	.327	8.3058	.377	9.5758	.427	10.8458	.477	12.1158
.278	7.0612	.328	8.3312	.378	9.6012	.428	10.8712	.478	12.1412
.279	7.0366	.329	8.3566	.379	9.6266	.429	10.8966	.479	12.1666
.280	7.1120	.330	8.3820	.380	9.6520	.430	10.9220	.480	12.1920
.281	7.1374	.331	8.4074	.381	9.6774	.431	10.9474	.481	12.2174
.282	7.1628	.332	8.4328	.382	9.7028	.432	10.9728	.482	12.2428
.283	7.1882	.333	8.4582	.383	9.7282	.433	10.9982	.483	12.2682
.284	7.2136	.334	8.4836	.384	9.7536	.434	11.0236	.484	12.2936
.285	7.2390	.335	8.5090	.385	9.7790	.435	11.0490	.485	12.3190
.286	7.2644	.336	8.5344	.386	9.8044	.436	11.0744	.486	12.3444
.287	7.2898	.337	8.5598	.387	9.8298	.437	11.0998	.487	12.3698
.288	7.3152	.338	8.5852	.388	9.8552	.438	11.1252	.488	12.3952
.289	7.3406	.339	8.6106	.389	9.8806	.439	11.1506	.489	12.4206
.290	7.3660	.340	8.6360	.390	9.9060	.440	11.1760	.490	12.4460
.291	7.3914	.341	8.6614	.391	9.9314	.441	11.2014	.491	12.4714
.292	7.4168	.342	8.6868	.392	9.9568	.442	11.2268	.492	12.4968
.293	7.4422	.343	8.7122	.393	9.9822	.443	11.2522	.493	12.5222
.294	7.4676	.344	8.7376	.394	10.0076	.444	11.2776	.494	12.5476
.295	7.4930	.345	8.7630	.395	10.0330	.445	11.3030	.495	12.5730
.296	7.5184	.346	8.7884	.396	10.0584	.446	11.3284	.496	12.5984
.297	7.5438	.347	8.8138	.397	10.0838	.447	11.3538	.497	12.6238
.298	7.5692	.348	8.8392	.398	10.1092	.448	11.3792	.498	12.6492
.299	7.5946	.349	8.8646	.399	10.1346	.449	11.4046	.499	12.6746
.300	7.6200	.350	8.8900	.400	10.1600	.450	11.4300	.500	12.7000

Table A-3. International System of Units (SI)

Quantity	Unit	Symbol
Elemental units		
Length	meter	m
Mass	kilogram	kg
Time	second	s
Electric current	ampere	A
Temperature	degree Kelvin	°K
Luminous intensity	candela	cd
Supplementary units		
Plane angle	radian	rad
Solid angle	steradian	sr
Derived units		
Area	square meter	m^2
Volume	cubic meter	m^3
Frequency	hertz	Hz (s^{-1})
Density	kilogram per cubic meter	kg/m^3
Velocity	meter per second	m/s
Angular velocity	radian per second	rad/s
Acceleration	meter per second squared	m/s^2
Angular acceleration	radian per second squared	rad/s^2
Force	newton	N (kg m/s^2)
Pressure	newton per square meter	N/m^2
Kinematic viscosity	square meter per second	m^2/s
Dynamic viscosity	newton-second per square meter	N s/m^2
Work, energy, quantity of heat	joule	J (N m)
Power	watt	W (J/s)
Electric charge	coulomb	C (A s)
Voltage, potential difference, electrotive force	volt	V (W/A)
Electric field strength	volt per meter	V/m
Electric resistance	ohm	Ω (V/A)
Electric capacitance	farad	F (A s/V)
Magnetic flux	weber	Wb (V s)
Inductance	henry	H (V s/A)
Magnetic flux density	tesla	T (Wb/m^2)
Magnetic field strength	ampere per meter	A/m
Magnetomotive force	ampere	A
Luminous flux	lumen	lm (cd sr)
Luminance	candela per square meter	cd/m^2
Illumination	lux	lx (lm/m^2)

USE OF TABLES

Following are step by step directions for the solution to an example conversion problem. The example is: Convert 12 3/4 inches to centimeters.

1. Convert all fractions to decimals. (Refer to table A-3.)

   12 3/4 = 12.75

2. Refer to table A-4 and find the column for the unit which you have. This would be the column labeled “INCHES” in the “Length” table.

3. Locate the numeral 1 in the column labeled “INCHES.”

4. Locate the column labeled “CENTIMETERS.”

5. Read the number in the CENTIMETERS column that is in direct line with the numeral 1 located in the INCHES column.

   Read 2.540

6. Multiply the number of inches of this example by the conversion factor to obtain the number of centimeters.

   2.540 times 12.75 equals 32.385

7. Round off the answer to not over four significant figures (four numbers counting from the first non-zero number on the left. Fewer significant figures may be used depending on the accuracy of measurement and the tolerances allowed. For most work in this manual, centimeters would be expressed as three significant figures.

   12 3/4 inches = 32.4 centimeters

Table A-4. Fraction/Decimal/Millimeter Conversion Chart

Fractions	Dec Equiv	MM Equiv	Fractions	Dec Equiv	MM Equiv
1/64	0.01562	0.397	33/64	0.515625	13.097
1/32	0.03125	0.794	17/32	0.53125	13.494
3/64	0.04688	1.191	35/64	0.546875	13.891
1/16	0.0625	1.588	9/16	0.5625	14.288
5/64	0.078125	1.984	37/64	0.578125	14.684
3/32	0.09375	2.381	19/32	0.59375	15.081
7/64	0.109375	2.778	39/64	0.609375	15.478
1/8	0.125	3.175	5/8	0.625	15.875
9/64	0.140625	3.572	41/64	0.640625	16.272
5/32	0.15625	3.969	21/32	0.65625	16.669
11/64	0.171875	4.366	43/64	0.671875	17.066
3/16	0.1875	4.762	11/16	0.6875	17.462
13/64	0.203125	5.159	45/64	0.703125	17.859
7/32	0.21875	5.556	23/32	0.71875	18.256
15/64	0.234375	5.953	47/64	0.734375	18.653
1/4	0.25	6.350	3/4	0.75	19.050
17/64	0.265625	6.747	49/64	0.765625	19.447
9/32	0.28/125	7.144	25/32	0.78125	19.844
19/64	0.296875	7.541	51/64	0.796875	20.241
5/16	0.3125	7.938	13/16	0.8125	20.638
21/64	0.328125	8.334	53/64	0.828125	21.034
11/32	0.34375	8.731	27/32	0.84375	21.431
23/64	0.359375	9.128	55/64	0.859375	21.828
3/8	0.375	9.525	7/8	0.875	22.225
25/64	0.390625	9.922	57/64	0.890625	22.622
13/32	0.40625	10.319	29/32	0.90625	23.019
27/64	0.421875	10.716	59/64	0.921875	23.416
7/16	0.4375	11.112	15/16	0.9375	23.812
29/64	0.453125	11.509	61/64	0.953125	24.209
15/32	0.46875	11.906	31/32	0.96875	24.606
31/64	0.484375	12.303	63/64	0.984375	25.003
1/2	0.5	12.700	1	1.0	25.400

Table A-5. Metric Unit Conversions

Length

Millimeters	Centimeters	Inches	Feet	Yards	Meters
1.0	0.1000	0.03937	0.003281	0.001094	0.001000
10.0	1.0	0.3937	0.03281	0.01094	0.01000
25.40	2.540	1.0	0.08333	0.02778	0.0254
304.8	30.48	12.0	1.0	0.3333	0.3048
914.4	91.44	36.0	3.000	1.0	0.9144
1000.0	100.0	39.37	3.281	1.094	1.0

Weight

Grams	Kilograms	Grains	Ounces Avoirdupois	Pounds Avoirdupois
1000.0	1.0	15,432.0	35.27	2.205
1.0	0.0010	15,432	0.03527	0.002205
0.06480	0.00006480	1.0	0.002286	0.0001429
28.35	0.02835	437.5	1.0	0.0625
453.6	0.4536	7,000.0	16.0	1.0

Velocity

Meters/Sec	Kilometers/Hr	Feet/Sec	Miles/Hr	Knots
1.0	3.600	3.281	2.237	1.944
0.2778	1.0	0.9113	0.6214	0.5400
0.3048	1.097	1.0	0.6818	0.5925
0.4470	1.609	1.467	1.0	0.8690
0.5144	1.852	1.688	1.1511	1.0

Pressure

Bars (Mega-baryes)	Kilograms/ square cm	Pounds/ square inch	Atmos-pheres	Columns of Mercury (0°C) Meters	Columns of Mercury (0°C) Inches	Columns of Water (15°C) Meters	Columns of Water (15°C) Inches	Columns of Water (15°C) Feet
1.0	1.0197	14.50	0.9869	0.7501	29.53	10.21	401.8	33.49
0.9807	1.0	14.22	0.9678	0.7356	28.96	10.01	394.1	32.84
0.06895	0.07031	1.0	0.06805	0.05171	2.036	0.7037	27.70	2.309
1.0133	1.0332	14.70	1.0	0.7600	29.92	10.34	407.1	33.93
1.3332	1.3595	19.34	1.316	1.0	39.37	13.61	535.7	44.64
0.03386	0.03453	0.4912	0.03342	0.02540	1.0	0.3456	13.61	1.134
0.09798	0.09991	1.421	0.09670	0.07349	2.893	1.0	39.37	3.281
0.002489	0.002538	0.03609	0.002456	0.001867	0.0739	0.02540	1.0	0.08333
0.02986	0.03045	0.4331	0.02947	0.02240	0.8819	0.3048	12.0	1.0

Area

Square Meters	Square Centimeters	Square Inches	Square Feet	Square Yards
1.0	10,000.0	1,550.0	10.76	1.196
0.0001	1.0	0.1550	0.001076	0.0001196
0.0006452	6,452.0	1.0	0.006944	0.0007716
0.9290	929.0	144.0	1.0	0.1111
0.8361	8,361.0	1,296.0	9.0000	1.0

Volume

Cubic Inches	Cubic Feet	Cubic Yards	Gallons (U.S.)	Quarts (U.S.)	Liters (Cubic Decimeters)	Cubic Meters	Milliliters (Cubic Centimeters)
1.0	0.0005787	0.00002143	0.004329	0.01732	0.01639	0.00001639	16.39
1,728.0	1.0	0.03704	7.481	29.92	28.32	0.02832	28,320
46,656.0	27.0	1.0	202.2	807.9	764.6	0.7646	764,600
231.0	0.1337	0.004951	1.0	4.000	3.785	0.003785	3,785
57.75	0.03342	0.001238	0.2500	1.0	0.9464	0.0009464	946.4
61.02	0.03531	0.001308	0.2642	1.057	1.0	0.001	1,000
61020	353.1	1.308	264.2	1057	1000.0	1	1,000,000
0.06102	0.00003531	0.000001308	0.0002642	0.001057	0.001	0.000001	1

Table A-6. Alphabetical Index of Metric Unit Conversions

TO CONVERT	INTO	MULTIPLY BY
A		
Abcoulomb	Statcoulombs	2.998×10^{10}
Acre	Sq. chain (Gunters)	10
Acre	Rods	160
Acre	Square links (Gunters)	1×10^{5}
Acre	Hectare or sq.hectometer	0.4047
acres	sq feet	43,560.0
acres	sq meters	4,047.
acres	sq miles	1.562×10^{-3}
acres	sq yards	4,840.
acre-feet	cu feet	43,560.0
acre-feet	gallons	3.259×10^{4}
amperes/sq cm	amps/sq in.	6.452
amperes/sq cm	amps/sq meter	10^{4}
amperes/sq in.	amps/sq cm	0.1550
amperes/sq in.	amps/sq meter	1,550.0
amperes/sq meter	amps/sq cm	10^{-4}
amperes/sq meter	amps/sq in.	6.452×10^{-4}
ampere-hours	coulombs	3,600.0
ampere-hours	faradays	0.03731
ampere-turns	gilberts	1.257
ampere turns/cm	amp-turns/in.	2.540
ampere-turns/cm	amp-turns/meter	100.0
ampere-turns/cm	gilberts/cm	1.257
ampere-turns/in.	amp-turns/cm	0.3937
ampere-turns/in.	amp-turns/meter	39.37
ampere-turns/in.	gilberts/cm	0.4950
ampere-turns/meter	amp/turns/cm	0.01
ampere-turns/meter	amp-turns/in.	0.0254
ampere-turns/meter	gilberts/cm	0.01257
Angstrom unit	Inch	3937×10^{-9}
Angstrom unit	Meter	1×10^{-10}
Angstrom unit	Micron or (Mu)	1×10^{-4}
Are	Acre (US)	0.02471
Ares	sq. yards	119.60
ares	acres	0.02471
ares	sq meters	100.0
Astronomical Unit	Kilometers	1.495×10^{8}
Atmospheres	Ton/sq. inch	0.007348
atmospheres	cms of mercury	76.0
atmospheres	ft of water (at 4°C)	33.90
atmospheres	in. of mercury (at 0°C)	29.92
atmospheres	kgs/sq cm	1.0333
atmospheres	kgs/sq meter	10,332
atmospheres	pounds/sq in.	14.70
atmospheres	tons/sq ft	1.058
B		
Barrels (U.S., dry)	cu. inches	7056.0
Barrels (U.S., dry)	quarts (dry)	105.0
Barrels (U.S., liquid)	gallons	31.5
barrels (oil)	gallons (oil)	42.0
bars	atmospheres	0.9869
bars	dynes/sq cm	10^{4}
bars	kgs/sq meter	1.020×10^{4}
bars	pounds/sq ft	2,089.0
bars	pounds/sq in.	14.50
B (Cont)		
Baryl	Dyne/sq. cm.	1.000
Bolt (US Cloth)	Meters	36.576
BTU	Liter-Atmosphere	10.409
Btu	ergs	1.0550×10^{10}
Btu	foot-lbs	778.3
Btu	gram-calories	252.0
Btu	horsepower-hrs	3.931×10^{-4}
Btu	joules	1,054.8
Btu	kilogram-calories	0.2520
Btu	kilogram-meters	107.5
Btu	kilowatt-hrs	2.928×10^{-4}
Btu/hr	foot-pounds/sec	0.2162
Btu/hr	gram-cal/sec	0.0700
Btu/hr	horsepower-hrs	3.929×10^{-4}
Btu/hr	watts	0.2931
Btu/min	foot-lbs/sec	12.96
Btu/min	horsepower	0.02356
Btu/min	kilowatts	0.01757
Btu/min	watts	17.57
Btu/sq ft/min	watts/sq in.	0.1221
Bucket (Br. dry)	Cubic Cm.	1.818×10^{4}
bushels	cu ft	1.2445
bushels	cu in.	2,150.4
bushels	cu meters	0.03524
bushels	liters	35.24
bushels	pecks	4.0
bushels	pints (dry)	64.0
bushels	quarts (dry)	32.0
C		
Calories, gram(mean)	B.T.U. (mean)	3.9685×10^{-3}
Candle/sq. cm	Lamberts	3.142
Candle/sq. inch	Lamberts	0.4870
Centares (centiares)	sq meters	1.0
Centigrade	Fahrenheit	(C° X 9/5) + 32
centigrams	grams	0.01
Centiliter	Ounce fluid (US)	0.3382
Centiliter	Cubic inch	0.6103
Centiliter	drams	2.705
centiliters	liters	0.01
centimeters	feet	3.281×10^{-2}
centimeters	inches	0.3937
centimeters	kilometers	10^{-5}
centimeters	meters	0.01
centimeters	miles	6.214×10^{-8}
centimeters	millimeters	10.0
centimeters	mils	393.7
centimeters	yards	1.024×10^{-2}
centimeter-dynes	cm-grams	1.020×10^{-3}
centimeter-dynes	meter-kgs	1.020×10^{-8}
centimeter-dynes	pound-feet	7.376×10^{-8}
centimeter-grams	cm-dynes	980.7
centimeter-grams	meter-kgs	10^{-5}
centimeter-grams	pound-feet	7.233×10^{-5}
centimeters of mercury	atmospheres	0.01316
centimeters of mercury	feet of water	0.4461
centimeters of mercury	kgs/sq meter	136.0

Table A-6. Alphabetical Index of Metric Unit Conversions (Cont)

TO CONVERT	INTO	MULTIPLY BY
C (Cont)		
centimeters of mercury	pounds/sq ft	27.85
centimeters of mercury	pounds/sq in.	0.1934
centimeters/sec	feet/min	1.1969
centimeters/sec	feet/sec	0.03281
centimeters/sec	kilometers/hr	0.036
centimeters/sec	knots	0.1943
centimeters/sec	miles/hr	0.02237
centimeters/sec	miles/min	3.728×10^{-4}
centimeters/sec/sec	feet/sec/sec	0.03281
centimeters/sec/sec	kms/hr/sec	0.036
centimeters/sec/sec	meters/sec/sec	0.01
centimeters/sec/sec	miles/hr/sec	0.02237
Chain	Inches	792.00
Chain	meters	20.12
Chains (surveyors' or Gunter's)	yards	22.00
circular mils	sq cms	5.067×10^{-6}
circular mils	sq mils	0.7854
Circumference	Radians	6.283
circular mils	sq inches	7.854×10^{-7}
Cords	cord feet	8
Cord feet	cu. feet	16
Coulomb	Statcoulombs	2.998×10^{9}
coulombs	faradays	1.036×10^{-5}
coulombs/sq cm	coulombs/sq in.	64.52
coulombs/sq cm	coulombs/sq meter	10^{4}
coulombs/sq in.	coulombs/sq cm	0.1550
coulombs/sq in.	coulombs/sq meter	1,550.0
coulombs/sq meter	coulombs/sq cm	10
coulombs/sq meter	coulombs/sq in.	6.452×10^{-4}
cubic centimeters	cu feet	3.531×10^{-5}
cubic centimeters	cu inches	0.06102
cubic centimeters	cu meters	10^{-6}
cubic centimeters	cu yards	1.308×10^{-6}
cubic centimeters	gallons (U.S. liq.)	2.642×10^{-4}
cubic centimeters	liters	0.001
cubic centimeters	pints (U.S. liq.)	2.113×10^{-3}
cubic centimeters	quarts (U.S. liq.)	1.057×10^{-3}
cubic feet	bushels (dry)	0.8036
cubic feet	cu cms	28,320.0
cubic feet	cu inches	1,728.0
cubic feet	cu meters	0.02832
cubic feet	cu yards	0.03704
cubic feet	gallons (U.S. liq.)	7.48052
cubic feet	liters	28.32
cubic feet	pints (U.S. liq.)	59.84
cubic feet	quarts (U.S. liq.)	29.92
cubic feet/min	cu cms/sec	472.0
cubic feet/min	gallons/sec	0.1247
cubic feet/min	liters/sec	0.4720
cubic feet/min	pounds of water/min	62.43
cubic feet/sec	million gals/day	0.646317
cubic feet/sec	gallons/min	448.831
cubic inches	cu cms	16.39
cubic inches	cu feet	5.787×10^{-4}
cubic inches	cu meters	1.639×10^{-5}
cubic inches	cu yards	2.143×10^{-5}
C (Cont)		
cubic inches	gallons	4.329×10^{-3}
cubic inches	liters	0.01639
cubic inches	mil-feet	1.061×10^{5}
cubic inches	pints(U.S. liq.)	0.03463
cubic inches	quarts(U.S. liq.)	0.01732
cubic meters	bushels (dry)	28.38
cubic inches	cu yards	2.143×10^{-5}
cubic meters	cu cms	10^{4}
cubic meters	cu feet	35.31
cubic meters	cu inches	61,023.0
cubic meters	cu yards	1.308
cubic meters	gallons (U.S. liq.)	264.2
cubic meters	liters	1,000.0
cubic meters	pints(U.S. liq.)	2,113.0
cubic meters	quarts (U.S. liq.)	1,057.0
cubic yards	cu cms	7.646×10^{5}
cubic yards	cu feet	27.0
cubic yards	cu inches	46,656.0
cubic yards	cu meters	0.7646
cubic yards	gallons (U.S. liq.)	202.0
cubic yards	liters	764.6
cubic yards	pints (U.S. liq.)	1,615.9
cubic yards	quarts (U.S. liq.)	807.9
cubic yards/min	cubic ft/sec	0.45
cubic yards/min	gallons/sec	3.367
cubic yards/min	liters/sec	12.74
D		
Dalton	Gram	1.650×10^{-24}
days	seconds	86,400.0
decigrams	grams	0.1
deciliters	liters	0.1
decimeters	meters	0.1
degrees (angle)	quadrants	0.01111
degrees (angle)	radians	0.01745
degrees (angle)	seconds	3,600.0
degrees/sec	radians/sec	0.01745
degrees/sec	revolutions/min	0.1667
degrees/sec	revolutions/sec	2.778×10^{-3}
dekagrams	grams	10.0
dekaliters	liters	10.0
dekameters	meters	10.0
Drams (apothecaries' or troy)	ounces (avoirdupois)	0.1371429
Drams (apothecaries' or troy)	ounces (troy)	0.125
Drams (U.S., fluid or apoth.)	cubic cm.	3.6967
drams	grams	1.7718
drams	grains	27.3437
drams	ounces	0.0625
Dyne/cm	Erg/sq. millimeter	0.01
Dyne/sq. cm.	Atmospheres	9.869×10^{-7}
Dyne/sq. cm.	Inch of Mercury at 0°C	2.953×10^{-5}
Dyne/sq.cm.	Inch of Water at 4°C	4.015×10^{-4}
dynes	grams	1.020×10^{-3}
dynes	joules/cm	10^{-7}
dynes	joules/meter (newtons)	10^{-5}

Table A-6. Alphabetical Index of Metric Unit Conversions (Cont)

TO CONVERT	INTO	MULTIPLY BY
	D (Cont)	
dynes	kilograms	1.020×10^{-6}
dynes	poundals	7.233×10^{-5}
dynes	pounds	2.248×10^{-6}
dynes/sq cm	bars	10^{-6}
	E	
Ell	Cm.	114.30
Ell	Inches	45
Em, Pica	Inch	0.167
Em, Pica	Cm.	0.4233
Erg/sec	Dyne - cm/sec	1.000
ergs	Btu	9.480×10^{-11}
ergs	dyne-centimeters	1.0
ergs	foot-pounds	7.367×10^{-8}
ergs	gram-calories	0.2389×10^{-7}
ergs	gram-cms	1.020×10^{-3}
ergs	horsepower-hrs	3.7250×10^{-14}
	E (Cont)	
ergs	joules	10^{-7}
ergs	kg-calories	2.389×10^{-11}
ergs	kg-meters	1.020×10^{-8}
ergs	kilowatt-hrs	0.2778×10^{-13}
ergs	watt-hours	0.2778×10^{-18}
ergs/sec	Btu/min	5.688×10^{-6}
ergs/sec	ft-lbs/min	4.427×10^{-6}
ergs/sec	ft-lbs/sec	7.3756×10^{-8}
ergs/sec	horsepower	1.341×10^{-10}
ergs/sec	kg-calories/min	1.433×10^{-9}
ergs/sec	kilowatts	10^{-10}
	F	
farads	microfarads	10^{6}
Faraday/sec	Ampere (absolute)	9.6500×10^{4}
faradays	ampere-hours	26.80
faradays	coulombs	9.649×10^{4}
Fathom	Meter	1.828804
fathoms	feet	6.0
feet	centimeters	30.48
feet	kilometers	3.048×10^{-4}
feet	meters	0.3048
feet	miles (naut.)	1.645×10^{-4}
feet	miles (stat.)	1.894×10^{-4}
feet	millimeters	304.8
feet	mils	1.2×10^{4}
feet of water	atmospheres	0.02950
feet of water	in. of mercury	0.8826
feet of water	kgs/sq cm	0.03048
feet of water	kgs/sq meter	304.8
feet of water	pounds/sq ft	62.43
feet of water	pounds/sq in	0.4335
feet/min	cms/sec	0.5080
feet/min	feet/sec	0.01667
feet/min	kms/hr	0.01829
feet/min	meters/min	0.3048
feet/min	miles/hr	0.01136
feet/sec	cms/sec	30.48
	F (Cont)	
feet/sec	kms/hr	1.097
feet/sec	knots	0.5921
feet/sec	meters/min	18.29
feet/sec	miles/hr	0.6818
feet/sec	miles/min	0.01136
feet/sec	cms/sec	30.48
feet/sec/sec	cms/sec/sec	30.48
feet/sec/sec	kms/hr/sec	1.097
feet/sec/sec	meters/sec/sec	0.3048
feet/sec/sec	miles/hr/sec	0.6818
feet/100 feet	per cent grade	1.0
Foot - candle	Lumen/sq. meter	10.764
foot-pounds	Btu	1.286×10^{-3}
foot-pounds	ergs	1.356×10^{7}
foot-pounds	gram-calories	0.3238
foot-pounds	hp-hrs	5.050×10^{-7}
foot-pounds	joules	1.356
foot-pounds	kg-calories	3.24×10^{-4}
foot-pounds	kg-meters	0.1383
foot-pounds	kilowatt-hrs	3.766×10^{-7}
foot-pounds/min	Btu/min	1.286×10^{-3}
foot-pounds/min	foot-pounds/sec	0.01667
foot-pounds/min	horsepower	3.030×10^{-5}
foot-pounds/min	kg-calories/min	3.24×10^{-4}
foot-pounds/min	kilowatts	2.260×10^{-5}
foot-pounds/sec	Btu/hr	4.6263
foot-pounds/sec	Btu/min	0.07717
foot-pounds/sec	horsepower	1.818×10^{-3}
foot-pounds/sec	kg-calories/min	0.01945
foot-pounds/sec	kilowatts	1.356×10^{-3}
Furlongs	miles(U.S.)	0.125
furlongs	rods	40.0
furlongs	feet	660.0
	G	
gallons	cu cms	3,785.0
gallons	cu feet	0.1337
gallons	cu inches	231.0
gallons	cu meters	3.785×10^{-3}
gallons	cu yards	4.951×10^{-3}
gallons	liters	3.785
gallons (liq Br. Imp.)	gallons (U.S. liq)	1.20095
gallons (U.S.)	gallons (Imp.)	0.83267
gallons of water	pounds of water	8.3453
gallons/min	cu ft/sec	2.228×10^{-3}
gallons/min	liters/sec	0.06308
gallons/min	cu ft/hr	8.0208
gausses	lines/sq in.	6.452
gausses	webers/sq cm	10^{-8}
gausses	webers/sq in.	6.452×10^{-8}
gausses	webers/sq meter	10^{-4}
gilberts	ampere-turns	0.7958
gilberts/cm	amp-turns/cm	0.7958
gilberts/cm	amp-turns/in	2.021
gilberts/cm	amp-turns/meter	79.58
Gills (British)	cubic cm.	142.07
gills	liters	0.1183
gills	pints (liq.)	0.25

Table A-6. Alphabetical Index of Metric Unit Conversions (Cont)

TO CONVERT	INTO	MULTIPLY BY
G (Cont)		
Grade	Radian	0.01571
Grains	drams (avoirdupois)	0.03657143
grains (troy)	grains (avdp)	1.0
grains (troy)	grams	0.06480
grains (troy)	ounces (avdp)	2.0833×10^{-3}
grains (troy)	pennyweight (troy)	0.04167
grains/U.S. gal	parts/million	17.118
grains/U.S. gal	pounds/million gal	142.86
grains/Imp. gal	parts/million	14.286
grams	dynes	980.7
grams	grains	15.43
grams	joules/cm	9.807×10^{-5}
grams	joules/meter (newtons)	$9,807 \times 10^{-3}$
grams	kilograms	0.001
grams	milligrams	1.000.0
grams	ounces (avdp)	0.03527
grams	ounces (troy)	0.03215
grams	poundals	0.07093
grams	pounds	2.205×10^{-3}
grams/cm	pounds/inch	5.600×10^{-3}
grams/cu cm	pounds/cu ft	62.43
grams/cu cm	pounds/cu in	0.03613
grams/cu cm	pounds/mil-foot	3.405×10^{-7}
grams/liter	grains/gal	58.417
grams/liter	pounds/1.000 gal	8.345
grams/liter	pounds/cu ft	0.062427
grams/liter	parts/million	1,000.0
grams/sq cm	pounds/sq ft	2.0481
gram-calories	Btu	3.9683×10^{-3}
gram-calories	ergs	4.1868×10^{7}
gram-calories	foot-pounds	3.0880
gram-calories	horsepower-hrs	1.5596×10^{-6}
gram-calories	kilowatt-hrs	1.1630×10^{-6}
gram-calories	watt-hrs	1.1630×10^{-3}
grams-calories/sec	Btu/hr	14.286
gram-centimeters	Btu	9.297×10^{-8}
gram-centimeters	ergs	980.7
gram-centimeters	joules	9.807×10^{-5}
gram-centimeters	kg-cal	2.343×10^{-8}
gram-centimeters	kg-meters	10^{-5}
H		
Hand	Cm.	10.16
hetacres	acres	2.471
hectares	sq feet	1.076×10^{5}
hectograms	grams	100.0
hectoliters	liters	100.0
hectometers	meters	100.0
hectowatts	watts	100.0
henries	millihenries	1,000.0
Hogsheads (British)	cubic ft.	10.114
Hogsheads (U.S.)	cubic ft.	8.42184
Hogsheads (U.S)	gallons (U.S.)	63
horsepower	Btu/min	42.44
horsepower	foot-lbs/min	33,000.0
horsepower	foot-lbs/sec	550.0
horsepower (metric) (542.5 ft lb/sec)	horsepower (550 ft lb/sec)	0.9863
H (Cont)		
horsepower (550 ft lb/sec)	horsepower (metric) (542.5 ft lb/sec)	1.014
horsepower	kg-calories/min	10.68
horsepower	kilowatts	0.7457
horsepower	watts	745.7
horsepower (boiler)	Btu/hr	33.479
horsepower (boiler)	kilowatts	9.803
horsepower-hrs	Btu	2,547.0
horsepower-hrs	ergs	2.6845×10^{13}
horsepower-hrs	foot-lbs	1.98×10^{4}
horsepower-hrs	gram-calories	641,190.0
horsepower-hrs	joules	2.684×10^{4}
horsepower-hrs	kg-calories	641.1
horsepower-hrs	kg-meters	2.737×10^{5}
horsepower-hrs	kilowatts-hrs	0.7457
hours	days	4.167×10^{-2}
hours	weeks	5.952×10^{-3}
Hundredweights (long)	pounds	112
Hundredweights (long)	tons (long)	0.05
Hundredweights (short)	ounces (avoirdupois)	1600
Hundredweights (short)	pounds	100
Hundredweights (short)	tons (metric)	0.0453592
Hundredweights (short)	tons (long)	0.0446429
I		
inches	centimeters	2.540
inches	meters	2.540×10^{-2}
inches	miles	1.578×10^{-5}
inches	millimeters	25.40
inches	mils	1,000.0
inches	yards	2.778×10^{-2}
inches of mercury	atmospheres	0.03342
inches of mercury	feet of water	1.133
inches of mercury	kgs/sq cm	0303453
inches of mercury	kgs sq meter	345.3
inches of mercury	pounds/sq ft	70.73
inches of mercury	pounds/sq in.	0.4912
inches of water (at 4°C)	atmospheres	2.458×10^{-3}
inches of water (at 4°C)	inches of mercury	0.07355
inches of water (at 4°C)	kgs/sq cm	2.540×10^{-3}
inches of water (at 4°C)	ounces/sq in.	0.5781
inches of water (at 4°C)	pounds/sq ft	5.204
inches of water (at 4°C)	pounds/sq in.	0.03613
International Ampere	Ampere (absolute)	0.9998
International Volt	Volts (absolute)	1.0003
International volt	Joules (absolute)	$1\text{-}593 \times 10^{-19}$
International volt	Joules	9.654×10^{4}
J		
joules	Btu	9.480×10^{-4}
joules	ergs	10^{7}
joules	foot-pounds	0.7376
joules	kg calories	2.389×10^{-4}
joules	kg-meters	0.1020
joules	watt-hrs	2.778×10^{-4}
joules/cm	grams	1.020×10^{4}
joules/cm	dynes	10^{7}

Table A-6. Alphabetical Index of Metric Unit Conversions (Cont)

TO CONVERT	INTO	MULTIPLY BY
	J (Cont)	
joules/cm	joules/meter (newtons)	100.0
joules/cm	poundals	723.3
joules/cm	pounds	22.48
	K	
kilograms	dynes	980,665.0
kilograms	grams	1,000.0
kilograms	joules/cm	0.09807
kilograms	joules/meter (newtons)	9.807
kilograms	poundals	70.93
kilograms	pounds	2.205
kilograms	tons (long)	9.842×10^{-4}
kilograms	tons (short)	1.102×10^{-3}
kilograms/cu meter	grams/cu cm	0.001
kilograms/cu meter	pounds/cu ft	0.06243
kilograms/cu meter	pounds/cu in.	3.613×10^{-5}
kilograms/cu meter	pounds/mil-foot	3.405×10^{-10}
kilograms/meter	pounds/ft	0.6720
Kilogram/sq. cm.	Dynes	980,665
kilograms/sq cm	atmospheres	0.9678
kilograms/sq cm	feet of water	32.81
kilograms/sq cm	inches of mercury	28.96
kilograms/sq cm	pounds/sq ft	2,048.0
kilograms/sq cm	pounds/sq in.	14.22
kilograms/sq meter	atmospheres	9.678×10^{-5}
kilograms/sq meter	bars	98.07×10^{-6}
kilograms/sq meter	feet of water	3.281×10^{-3}
kilograms/sq meter	inches of mercury	2.896×10^{-3}
kilograms/sq meter	pounds/sq ft	0.2048
kilograms/sq meter	pounds/sq in.	1.422×10^{-3}
kilograms/sq mm	kgs/sq meter	10^6
kilogram-calories	Btu	3.968
kilogram-calories	foot-pounds	3,088
kilogram-calories	hp-hrs	1.560×10^{-3}
kilogram-calories	joules	4,186
kilogram-calories	kg-meters	426.9
kilogram-calories	kilojoules	4.186
kilogram-calories	kilowatt-hrs	1.163×10^{-3}
kilogram meters	Btu	9.294×10^{-3}
kilogram meters	ergs	9.804×10^7
kilogram meters	foot-pounds	7.233
kilogram meters	joules	9.804
kilogram meters	kg-calories	2.342×10^{-3}
kilogram meters	kilowatt-hrs	2.723×10^{-6}
kilolines	maxwells	1,000.0
kiloliters	liters	1,000.0
kilometers	centimeters	10^5
kilometers	feet	3,281.0
kilometers	inches	3.937×10^4
kilometers	meters	1,000.0
kilometers	miles	0.6214
kilometers	millimeters	10^6
kilometers	yards	1,094.0
kilometers/hr	cms/sec	27.78
kilometers/hr	feet/min	54.68
kilometers/hr	feet/sec	0.9113
kilometers/hr	knots	0.5396
kilometers/hr	meters/min	16.67
kilometers/hr	miles/hr	0.6214
	K (Cont)	
kilometers/hr/sec	cms/sec/sec	27.78
kilometers/hr/sec	ft/sec/sec	0.9113
kilometers/hr/sec	meters/sec/sec	0.2778
kilometers/hr/sec	miles/hr/sec	0.6214
kilowatts	Btu/min	56.92
kilowatts	foot-lbs/min	4.426×10^4
kilowatts	foot-lbs/sec	737.6
kilowatts	horsepower	1.341
kilowatts	kg-calories/min	14.34
kilowatts	watts	1,000.0
kilowatt-hrs	Btu	3,413.0
kilowatt-hrs	ergs	3.600×10^{13}
kilowatt-hrs	foot-lbs	2.655×10^4
kilowatt-hrs	gram-calories	859,850.0
kilowatt-hrs	horsepower-hrs	1.341
kilowatt-hrs	joules	3.6×10^4
kilowatt-hrs	kg-calories	860.5
kilowatt-hrs	kg-meters	3.671×10^5
kilowatt-hrs	pounds of water evaporated from and at 212°F	3.53
kilowatt-hrs	pounds of water raised from 62° to 212°F	22.75
knots	feet/hr	6,080.0
knots	kilometers/hr	1.8532
knots	nautical miles/hr	1.0
knots	statute miles/hr	1.151
knots	yards/hr	2,027.0
knots	feet/sec	1.689
	L	
league	miles(approx.)	3.0
Light year	Miles	5.9×10^{12}
Light year	Kilometers	9.46091×10^{12}
lines/sq cm	gausses	1.0
lines/sq in.	gausses	0.1550
lines/sq in.	webers/sq cm	1.550×10^{-9}
lines/sq in.	webers/sq in.	10^{-8}
lines/sq in.	webers/sq meter	1.550×10^{-5}
links (engineer's)	inches	12.0
links (surveyor's)	inches	7.92
liters	bushels (U.S. dry)	0.02838
liters	cu cm	1,000.0
liters	cu inches	61.02
liters	cu meters	0.001
liters	cu yards	1.308×10^{-3}
liters	gallons (U.S. liq.)	0.2642
liters	pints (U.S. liq.)	2.113
liters	quarts (U.S. liq.)	1.057
liters/min	cu ft/sec	5.886×10^{-4}
liters/min	gals/sec	4.403×10^{-3}
lumens/sq ft	foot-candles	1.0
Lumen	Spherical candle power	0.07958
Lumen	Watt	0.001496
Lumen/sq. ft.	Lumen/sq. meter	10.76
lux	foot-candles	0.0929

Table A-6. Alphabetical Index of Metric Unit Conversions (Cont)

TO CONVERT	INTO	MULTIPLY BY
	M	
maxwells	kilolines	0.001
maxwells	webers	10^{-3}
megalines	maxwells	10^{4}
megohms	microhms	10^{12}
megohms	ohms	10^{6}
meters	centimeters	100.0
meters	feet	3.281
meters	inches	39.37
meters	kilometers	0.001
meters	miles (stat.)	6.214×10^{-4}
meters	millimeters	1,000.0
meters	yards	1.094
meters	yards	1.179
meters/min	cms/sec	1.667
meters/min	feet/min	3.281
meters/min	feet/sec	0.05468
meters/min	kms/hr	0.06
meters/min	knots	0.03238
meters/min	miles/hr	0.03728
meters/sec	feet/min	196.8
meters/sec	feet/sec	3.281
meters/sec	kilometers/hr	3.6
meters/sec	kilometers/min	0.06
meters/sec	miles/hr	2.237
meters/sec	miles/min	0.03728
meters/sec/sec	cms/sec/sec	100.0
meters/sec/sec	ft/sec/sec	3.281
meters/sec/sec	kms/hr/sec	3.6
meters/sec/sec	miles/hr/sec	2.237
meter-kilograms	cm-dynes	9.807×10^{7}
meter-kilograms	cm-grams	10^{5}
meter-kilograms	pound-feet	7.233
microfarad	farads	10^{-6}
micrograms	grams	10^{-6}
microhms	megohms	10^{-12}
microhms	ohms	10^{-6}
microliters	liters	10^{-6}
Microns	meters	1×10^{-6}
miles (naut.)	feet	6,080.27
miles (naut.)	kilometers	1.853
miles (naut.)	meters	1,853.0
miles (naut.)	miles (statute)	1.1516
miles (naut.)	yards	2,027.0
miles (statute)	centimeters	1.609×10^{5}
miles (statute)	feet	5,280.0
miles (statute)	inches	6.336×10^{4}
miles (statute)	kilometers	1.609
miles (statute)	meters	1,609.0
miles (statute)	miles (naut)	0.8684
miles (statute)	yards	1,760.0
miles/hr	cms/sec.	44.70
miles/hr	feet/min	88.0
miles/hr	feet/sec	1.467
miles/hr	kms/hr	1.609
miles/hr	kms/min	0.02682
miles/hr	kms/min	0.02682
miles/hr	knots	0.8684
miles/hr	meters/min	26.82
miles/hr	miles/min	0.1667

TO CONVERT	INTO	MULTIPLY BY
	M (Cont)	
miles/hr/sec	cms/sec/sec	44.70
miles/hr/sec	feet/sec/sec	1.467
miles/hr/sec	kms/hr/sec	1.609
miles/hr/sec	meters/sec/sec	0.4470
miles/min	cms/sec	2,682.0
miles/min	feet/sec	88.0
miles/min	kms/minn	1.609
miles/min	knots/min	0.8684
miles/min	miles/hr	60.0
mil-feet	cu inches	9.425×10^{-6}
milliers	kilograms	1,000.0
Millimicrons	meters	1×10^{-9}
Milligrams	grains	0.01543236
milligrams	grams	0.001
milligrams/liter	parts/million	1.0
millihenries	henries	0.001
milliliters	liters	0.001
millimeters	centimeters	0.1
millimeters	feet	3.281×10^{-3}
millimeters	inches	0.03937
millimeters	kilometers	10^{-6}
millimeters	meters	0.001
millimeters	miles	6.214×10^{-7}
millimeters	mils	39.37
millimeters	yards	1.094×10^{-3}
million gals/day	cu ft/sec	1.54723
mils	centimeters	2.540×10^{-3}
mils	feet	8.333×10^{-5}
mils	inches	0.001
mils	kilometers	2.540×10^{-8}
mils	yards	2.778×10^{-5}
miner's inches	cu ft/min	1.5
Minims (British)	cubic cm.	0.059192
Minims (U.S., fluid)	cubic cm.	0.061612
minutes (angles)	degrees	0.01667
minutes (angles)	quadrants	1.852×10^{-4}
minutes (angles)	radians	2.909×10^{-4}
minutes (angles)	seconds	60.0
myriagrams	kilograms	10.0
myriameters	kilometers	10.0
myriawatts	kilowatts	10.0
	N	
nepers	decibels	8.686
Newton	Dynes	1×10^{5}
	O	
OHM (International)	OHM (absolute)	1.0005
ohms	megohms	10^{-6}
ohms	microhms	10^{6}
ounces	drams	16.0
ounces	grains	437.5
ounces	grams	28.349527
ounces	pounds	0.0625
ounces	ounces (troy)	0.9115
ounces	tons (long)	2.790×10^{-5}
ounces	tons (metric)	2.835×10^{-5}

Table A-6. Alphabetical Index of Metric Unit Conversions (Cont)

TO CONVERT	INTO	MULTIPLY BY
O (Cont)		
ounces (fluid)	cu inches	1.805
ounces (fluid)	liters	0.02957
ounces (troy)	grains	480.0
ounces (troy)	grams	31.103481
ounces (troy)	ounces (avdp)	1.09714
ounces (troy)	pennyweights (troy)	20.0
ounces (troy)	pounds (troy)	0.08333
Ounce/sq. inch	Dynes/sq cm	0.4309
ounces/sq in.	pounds/sq in.	0.0625
P		
Parsec	Miles	19×10^{12}
Parsec	Kilometers	3.084×10^{13}
part-/million	grains/U.S. gal	0.0584
parts/million	grains/Imp. gal	0.07016
parts/million	pounds/million gal	8.345
Pecks (British)	cubic inches	554.6
Pecks (British)	liters	9.091901
Pecks (U.S.)	bushels	0.25
Pecks (U.S.)	cubic inches	37.605
Pecks (U.S.)	liters	8.809582
Pecks (U.S.)	quarts (dry)	8
pennyweights (troy)	grains	24.0
pennyweights (troy)	ounces (troy)	0.05
pennyweights (troy)	grams	1.55517
pennyweights (troy)	pounds (troy)	4.1667×10^{-3}
pints (dry)	cu inches	33.60
pints (liq.)	cu cms.	473.2
pints (liq.)	cu feet	0.01671
pints (liq.)	cu inches	28.87
pints (liq.)	cu meters	4.732×10^{-4}
pints (liq.)	cu yards	6.189×10^{-4}
pints (liq.)	gallons	0.125
pints (liq.)	liters	0.4732
pints (liq.)	quarts (liq.)	0.5
Planck's quantum	Erg second	6.624×10^{-27}
Poise	Gram/cm. sec.	1.00
Pounds (avoirdupois)	ounces (troy)	14.5833
poundals	dynes	13,826.0
poundals	grams	14.10
poundals	joules/cm	1.383×10^{-3}
poundals	joules/meter (newtons)	0.1383
poundals	kilograms	0.01410
poundals	pounds	0.03108
pounds	drams	256.0
pounds	dynes	44.4823×10^{4}
pounds	grains	7,000.0
pounds	grams	453.5924
pounds	joules/cm	0.04448
pounds	joules/meter (newtons)	4.448
pounds	kilograms	0.4536
pounds	ounces	16.0
pounds	ounces (troy)	14.5833
pounds	poundals	32.17
pounds	pounds (troy)	1.21528
pounds	tons (short)	0.0005
pounds (troy)	grains	5,760.0
P (Cont)		
pounds (troy)	grams	373.24177
pounds (troy)	ounces (avdp.)	13.1657
pounds (troy)	pennyweights (troy)	240.0
pounds (troy)	pounds (avdp.)	0.822857
pounds (troy)	tons (long)	3.6735×10^{-4}
pounds (troy)	tons (metric)	3.7324×10^{-4}
pounds (troy)	tons (short)	4.1143×10^{-4}
pounds of water	cu feet	0.01602
pounds of water	cu inches	27.68
pounds of water/min	cu ft/sec	2.670×10^{-4}
pound-feet	cm-dynes	1.356×10^{7}
pound-feet	cm-grams	13,825.0
pound-feet	meter-kgs	0.1383
pounds/cu ft	grams/cu cm	0.01602
pounds/cu ft	kgs/cu meter	16.02
pounds/cu ft	pounds/cu in.	5.787×10^{-4}
pounds/cu ft	pounds/mil-loot	5.456×10^{-9}
pounds/cu in.	gms/cu cm	27.68
pounds/cu in.	kgs/cu meter	2.768×10^{4}
pounds/cu in.	pounds/cu ft	1,728.0
pounds/cu in.	pounds/mil-foot	9.425×10^{-6}
pounds/ft	kgs-meter	1.488
pounds/in.	gms/cm	178.6
pounds/mil-foot	gms/cu cm	2.306×10^{6}
pounds/sq ft	atmospheres	4.725×10^{-4}
pounds/sq ft	feet of water	0.01602
pounds/sq ft	inches of mercury	0.01414
pounds/sq ft	kgs/sq meter	4.882
pounds/sq ft	pounds/sq in.	6.944×10^{-3}
pounds/sq. in.	atmospheres	0.06804
pounds/sq in.	feet of water	2.307
pounds/sq in.	inches of mercury	2.036
pounds/sq in.	kgs/sq meter	703.1
pounds/sq in.	pounds/sq ft	144.0
Q		
quadrants (angle)	degrees	90.0
quadrants (angle)	minutes	5,400.0
quadrants (angle)	radians	1.571
quadrants (angle)	seconds	3.24×10^{5}
quarts (dry)	cu inches	67.20
quarts (liq.)	cu cms	946.4
quarts (liq)	cu feet	0.03342
quarts (liq.)	cu inches	57.75
quarts (liq.)	cu meters	9.464×10^{-4}
quarts (liq.)	cu yards	1.238×10^{-3}
quarts (liq.)	gallons	0.25
quarts (liq.)	liters	0.9463
R		
radians	degrees	57.30
radians	minutes	3,438.0
radians	quadrants	0.6366
radians	seconds	2.063×10^{5}
radians/sec	degrees/sec	57.30
radians/sec	revolutions/min	9.549

Table A-6. Alphabetical Index of Metric Unit Conversions (Cont)

TO CONVERT	INTO	MULTIPLY BY
R (Cont)		
radians/sec	revolutions/sec	0.1592
radians/sec/sec	revs/min/min	573.0
radians/sec/sec	revs/min/sec	9.549
radians/sec/sec	revs/sec/sec	0.1592
revolutions	degrees	360.0
revolutions	quadrants	4.0
revolutions	radians	6.283
revolutions/min	degrees/sec	6.0
revolutions/min	radians/sec	0.1047
revolutions/min	revs/sec	0.01667
revolutions/miri/min	radians/sec/sec	1.745×10^{-3}
revolutions/min/min	revs/min/sec	0.01667
revolutions/min/min	revs/sec/sec	2.778×10^{-4}
revolutions/sec	degrees/sec	360.0
revolutions/sec	radians/sec	6.283
revolutions/sec	revs/min	60.0
revolutions/sec/sec	radians/sec/sec	6.283
revolutions/sec/sec	revs/min/min	3,600.0
revolutions/sec/sec	revs/min/sec	60.0
Rod	Chain (Gunters)	0.25
Rod	Meters	5.029
Rods (Surveyors' meas.)	yards	5.5
rods	feet	16.5
S		
Scruples	grains	20
seconds (angle)	degrees	2.778×10^{-4}
seconds (angle)	minutes	0.01667
seconds (angle)	quadrants	3.087×10^{-6}
seconds (angle)	radians	4.848×10^{-6}
Slug	Kilogram	14.59
Slug	Pounds	32.17
Sphere	Steradians	12.57
square centimeters	circular mils	1.973×10^{5}
square centimeters	sq feet	1.076×10^{-3}
square centimeters	sq inches	0.1550
square centimeters	sq meters	0.0001
square centimeters	sq miles	3.861×10^{-11}
square centimeters	sq millimeters	100.0
square centimeters	sq yards	1.196×10^{-4}
square feet	acres	2.296×10^{-5}
square feet	sq cms	929.0
square feet	sq inches	144.0
square feet	sq meters	0.09290
square feet	sq miles	3.587×10^{-6}
square feet	sq millimeters	9.290×10^{4}
square feet	sq yards	0.1111
square inches	circular mils	1.273×10^{6}
square inches	sq cms	6.452
square inches	sq feet	6.944×10^{-3}
square inches	sq millimeters	645.2
square inches	sq mils	10 6
square inches	sq yards	7.716×10^{-4}
square kilometers	acres	247.1
square kilometers	sq cms	10 10
square kilometers	sq ft	10.76×10^{6}
square kilometers	sq inches	1.550×10^{9}
S (Cont)		
square kilometers	sq meters	10^{6}
square kilometers	sq miles	0.3861
square kilometers	sq yards	1.196×10^{6}
square meters	acres	2.471×10^{-4}
square meters	sq cms	10^{4}
square meters	sq feet	10.76
square meters	sq inches	1,550.0
square meters	sq miles	3.861×10^{-7}
square meters	sq millimeters	10^{6}
square meters	sq yards	1.196
square miles	acres	640.0
square miles	sq feet	27.88×10^{6}
square miles	sq kms	2.590
square miles	sq meters	2.590×10^{6}
square miles	sq yards	3.098×10^{6}
square millimeters	circular mils	1,973.0
square millimeters	sq cms	0.01
square millimeters	sq feet	1.076×10^{-5}
square millimeters	sq inches	1.550×10^{-3}
square mils	circular mils	1.273
square mils	sq cms	6.452×10^{6}
square mils	sq inches	10^{-6}
square yards	acres	2.066×10^{-4}
square yards	sq cms	8,361.0
square yards	sq feet	9.0
square yards	sq inches	1,296.0
square yards	sq meters	0.8361
square yards	sq miles	3.228×10^{-7}
square yards	sq millimeters	$8,361 \times 10^{5}$
T		
temperature (°C) +273	absolute temperature (°C)	1.0
temperature (°C) +17.78	temperature (°F)	1.8
temperature (°F) +460	absolute temperature (°F)	1.0
temperature (°F)32	temperature (°C)	5/9
tons (long)	kilograms	1,016.0
tons (long)	pounds	2,240.0
tons (long)	tons (short)	1.120
tons (metric)	kilograms	1,000.0
tons (metric)	pounds	2,205.0
tons (short)	kilograms	907.1848
tons (short)	ounces	32,000.0
tons (short)	ounces (troy)	29,166.66
tons (short)	pounds	2,000.0
tons (short)	pounds (troy)	2,430.56
tons (short)	tons (long)	0.89287
tons (short)	tons (metric)	0.9078
tons (short)/sq ft	kgs/sq meter	9,765.0
tons (short)/sq ft	pounds/sq in.	2,000.0
tons of water/24 hrs	pounds of water/hr	83.333
tons of water/24 hrs	gallons/min	0.16643
tons of water/24 hrs	cu ft/hr	1.3349

Table A-6. Alphabetical Index of Metric Unit Conversions (Cont)

TO CONVERT	INTO	MULTIPLY BY
	V	
Volt/inch	Volt/cm.	0.39370
Volt (absolute)	Statvolts	0.003336
	W	
watts	Btu/hr	3.4129
watts	Btu/min	0.05688
Watts	ergs/sec	107.0
watts	foot-lbs/min	44.27
watts	foot-lbs/sec	0.7378
watts	horsepower	1.341×10^{-3}
watts	horsepower (metric)	1.360×10^{-3}
watts	kg-calories/min	0.01433
watts	kilowatts	0.001
Watts (Abs.)	B.T.U. (mean)/min.	0.056884
Watts (Abs.)	joules/sec.	1
watt-hours	Btu	3.413
watt-hours	ergs	3.60×10^{10}
watt-hours	foot-pounds	2,656.0
watt-hours	gram-calories	859.85
watt-hours	horsepower-hrs	1.341×10^{-3}
watt-hours	kilogram-calories	0.8605
	W (Cont)	
watt-hours	kilogram-meters	367.2
watt-hours	kilowatt-hrs	0.001
Watt (International)	Watt (absolute)	1.0002
webers	maxwells	10^8
webers	kilolines	10^5
webers/sq in.	gausses	1.550×10^7
webers/sq in.	lines/sq in.	10^8
webers/sq in	webers/sq cm	0.1550
webers/sq in.	webers/sq meter	1,550.0
webers/sq meter	gausses	10^4
webers/sq meter	lines/sq in.	6.452×10^4
webers/sq meter	webers/sq cm	10^{-4}
webers/sq meter	webers/sq in.	6.452×10^{-4}
	Y	
yards	centimeters	91.44
yards	kilometers	9.144×10^{-4}
yards	meters	0.9144×10^{-4}
yards	miles (naut.)	4.934×10^{-4}
yards	miles (stat.)	5.682×10^{-4}
yards	millimeters	914.4

THIS PAGE INTENTIONALLY LEFT BLANK.

GLOSSARY

ACID. A fundamental chemical class distinguished by having reactive hydrogen radicals (pH below 7.0). Acids can be extremely corrosive to metal and damaging to fabric.

ACM. Abbreviation for Aircraft Combat Maneuvers.

AIRCREWMEMBER. An aircraft crewmember. Passengers are not considered aircrewmembers.

ALKALINE. A substance which is opposite to an acid, a base (pH above 7.0). Also, any substance which has the properties of an alkali (metallic hydroxide).

ALPACA. The woolly hair from the alpaca. Alpaca wool is used in making linings and thin cloth.

APPROX. Abbreviation for approximately.

AQUEOUS. Made with, or from water.

A/R. Abbreviation for as required.

ARAMID. A heat-resistant, low flammability rate knitted material with excellent stability to 700°F. Its inherent properties allow the material to last 6-10 times longer than other materials and does not lose these properties with washing or drying. (Replaces polyamide material.)

ASSEMBLY. A grouping of parts fitted together to form a complete unit.

ATTENUATION. Reduction or lessening. For example, sound attenuation is the reduction of ambient noise in an aircraft by use of a helmet equipped with sound attenuating earphones; sonic earcup.

BACKSTITCH. A stitch made by inserting the needle a stitch length behind and bringing it up a stitch length ahead of the last stitch. Also, sewing back over a row of stitches.

BARTACK. A concentrated series of zig-zag like stitches used to reinforce points of stress.

BEESWAX. A wax that is applied cold or melted to thread to prevent raveling or cloth unknotting and to make thread easier to sew.

BIAS. A line or fold or cut diagonal to the grain of a fabric.

BINDING. A piece of tape or fabric folded over and stitched to a raw edge of cloth to prevent raveling or fraying.

BOXSTITCH. Rectangular stitch used to attach or reinforce.

BREADTH. The measure of an object from side to side (width).

C. Abbreviation for Celsius. A thermometric scale of which the interval between the freezing point and boiling point of water is divided into 100 degrees. 0 degrees C represents the freezing point and 100 degrees C represents the boiling point of water.

CAUTION. Indicates danger to the equipment. The caution precedes the step or item to which it refers.

CDI. Abbreviation for Collateral Duty Inspector. A CDI is permanently assigned to a production division with secondary quality assurance assignments to inspect work accomplished within his production division.

℄ Symbol for centerline.

COMPONENT. An item of equipment making up part of an assembly.

CONFIGURATION. The make-up, size, shape and relative location of parts in an item of equipment and its accessories. This includes the composition of the materials as well as marking details. The configuration of each equipment is specified by government drawings, military specifications and modification instructions.

COVERALL, ANTI-EXPOSURE. A one-piece outer garment worn to provide protection in adverse, low temperature conditions.

COVERALL, ANTI-g CUTAWAY. A garment worn by the aircrewmen of high performance aircraft to counteract the gravity forces caused by accelerations of aircraft maneuvers.

CROSS BOXSTITCH. A boxstitch with an X pattern stitch inside. Sometimes called BOX-X STITCH.

D-RING. A metal fitting shaped in the form of the letter “D”.

DART. A stitched, tapering fold in a section of fabric. Used for shaping the fabric by gathering material to conform with a predetermined contour.

DIA. Abbreviation for diameter.

DISPOSITION. Instructions on what is to be done with items which are obsolete, worn out or beyond repair.

DOFF. To remove or take off an item of clothing or equipment.

DON. To put on an item of clothing or equipment.

EDGEROLL. A beading around the border of a helmet shell, protecting the wearer from sharp edges and adds to energy absorption.

EGRESS. Outlet or means of getting out.

EJECTION SEAT. An emergency escape seat for propelling an occupant out and away from the aircraft by means of an explosive charge or rocket motor.

ELASTOMER. Any of various elastic substances resembling rubber.

EXTRUSION. A raised or grooved surface or edge.

F. Abbreviation for Fahrenheit. Pertaining to the thermometric scale where 32 degrees represents the freezing point of water and 212 degrees the boiling point.

FABRICATE. To make up or construct an item of equipment, accessory or material.

FOLDER. A device used as an attachment to a sewing machine to guide and fold cloth.

FAKE. To fold a line or lanyard in a back and forth fashion.

FASTENER, SLIDE. A type of fastener made of two lengths of tape with a series of metal or plastic scoops fastened to one side of each. A metal slide is provided which causes the scoops to mesh or lock in place as the fastener is closed, or to separate as the fastener is opened. Colloquial: ZIPPER.

FASTENER, SNAP. A metal fastener containing essentially a ball and a socket attached to opposed parts of a material and used to hold mating surfaces together.

FIBER. A natural or synthetic filament (as of wool, cotton, rayon, etc.) capable of being spun into yarn.

FID. A small, flat, hand tool of metal or wood used during the packing procedure to straighten and insert flaps into the container.

FITTING, QUICK-RELEASE. A device used to connect and release on instant response.

GAGE. An instrument for measuring pressure.

GAUGE. A measurement of size or thickness.

GFE. Abbreviation for Government Furnished Equipment.

GROMMET. A metal eye and washer used to reinforce a hole in material.

HEM. A border or reinforced edge formed by folding cloth back and securing it, usually by sewing.

HOOK TAPE. A strip of fabric tape with miniature hooks on one side. Hook tape is used together with pile tape as a fastener.

IN. Abbreviation for inches.

INFLATION ASSEMBLY. Inflation valve and carbon dioxide cylinder as a unit.

IN.$H_2$0. Abbreviation for inches of water column (27.68 IN.$H_2$0 equals 1 PSI equals 2.036 IN.Hg).

IN.Hg. Abbreviation for inches of mercury column (0.07349 IN.Hg equals 1.0 IN.$H_2$0).

INSPECTION. A close examination for damage, wear and dirt. Also, a regularly scheduled examination of oxygen equipment and accessories.

KNOT, BOWLINE. A knot formed by making a small overhand loop a desired distance from the end of the line. The end of the line is then passed through the loop from the underside of the main part of the line and around behind standing line then back through the small loop. When this knot is drawn tight, it will not slip but can be easily untied.

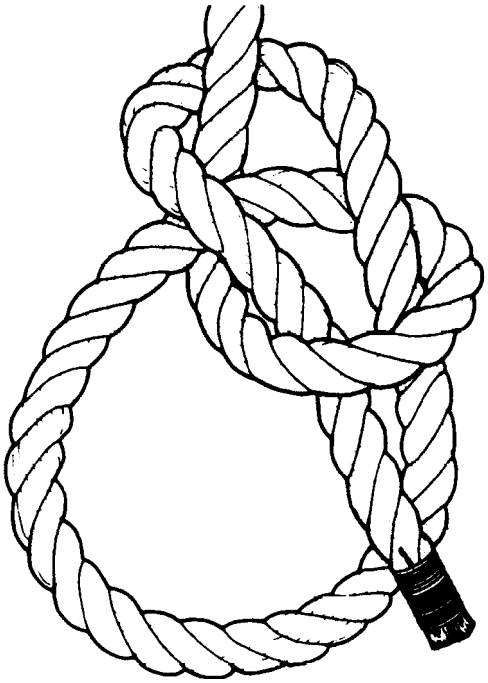

67-691

KNOT, LARK'S HEAD. A knot formed around an attachment ring or bar by passing the free ends of the line around the bar or through the ring and then through a loop or bight in the line.

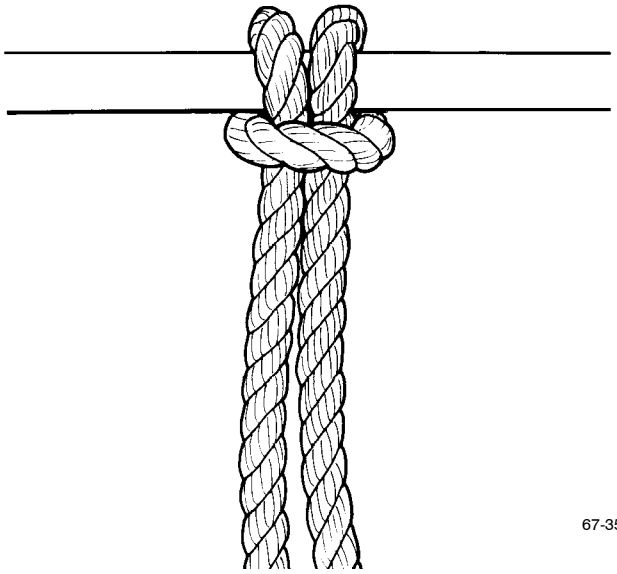

67-358

KNOT, OVERHAND. A simple knot tied in the end of a line by forming a loop and passing the end over and down through the loop.

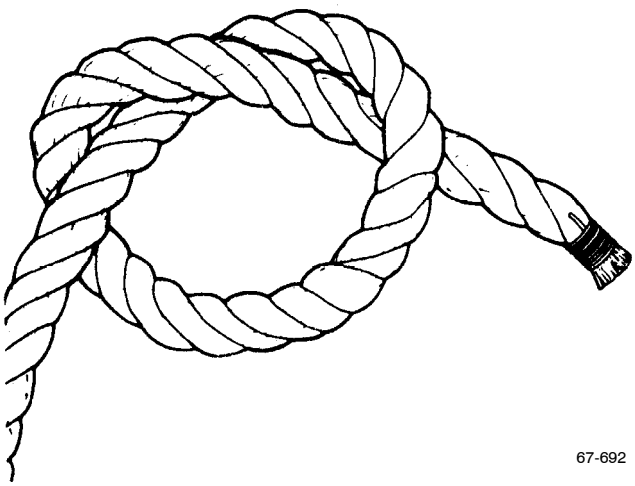

67-692

KNOT, SURGEON'S. The surgeon's knot is similar to the square knot, except that the first overhand tie is wrapped twice around the cord or line.

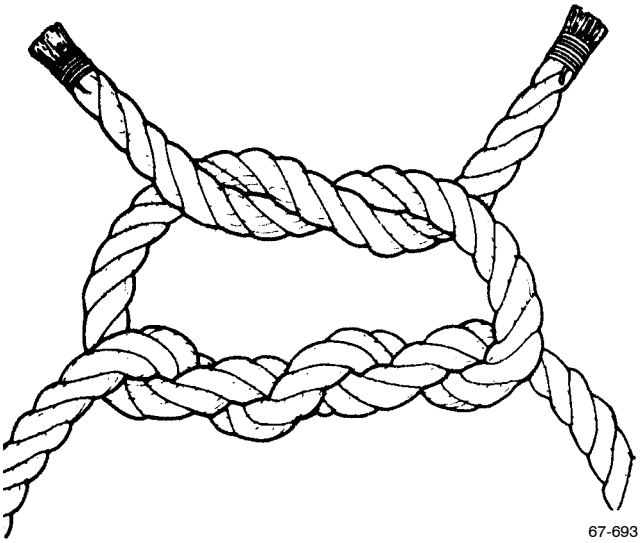

67-693

LBS. Abbreviation for pounds.

LOCKWIRE. A wire that prevents loosening of a securing device.

LPM. Abbreviation for liters per minute.

MANUFACTURER'S CODES. Identification codes for every manufacturer listed as a procurement source in accordance with cataloging handbooks H4/H8, Commercial and Government Entity Codes.

METHYL ETHYL KETONE (MEK). A colorless, flammable alcohol used in lacquers, paint removers, cements and adhesives, celluloid and cleaning fluids.

MILDEW. A damaging fungus or mold which forms on cloth or leather. It is caused by dampness and the absence of fresh air and sunlight.

MOUTON. A processed sheepskin that has been sheared and dyed to resemble beaver or seal.

NAMEPLATE. A label attached to equipment, giving data as to type, model number, date of manufacture, part number, serial number, etc.

NHA. Abbreviation for next higher assembly.

NO. Abbreviation for number.

NOTE. An information item. A note may precede or follow the item or step to which it refers.

PACK. To put together compactly; to store neatly, for example, packing a survival kit consists of stowing the survival equipment in a container, folding and covering the raft, and inserting both into the kit container.

PARAFFIN. Wax generally used with 50 percent beeswax as a hot dip to prevent the fraying of cut ends of webbing, cord, thread or tape. See also BEESWAX.

pH VALUE. A numerical scale of measuring the acidity or alkalinity of a solution. A pH reading can be made using litmus paper and comparison chart. A reading of 7.0 indicates a neutral solution; below 7.0 indicates acid and above 7.0 indicates alkaline (base).

PHOSPHORESCENT MATERIAL. A material that glows in the dark without producing any noticeable heat.

PILE TAPE. Strip of fabric tape with small nylon loops on one side. Used with hook tape as a fastener.

POLYAMIDE CLOTH. A fire-resistant synthetic cloth; also called “Nomex.”

PSI. Abbreviation for pounds per square inch. See also: PSIA and PSIG.

PSIA. Abbreviation for pounds per square inch, absolute. Absolute pressure is measured from absolute zero (100% vacuum), rather than from normal, or atmospheric pressure. It equals gage pressure plus 14.696 pounds per square inch. See also: PSI and PSIG.

PSIG. Abbreviation for pounds per square inch, gage. Indicates pressure above ambient pressure, as indicated on a pressure gage vented to the atmosphere. See also: PSI and PSIA.

QUALIFIED PERSONNEL. Graduates of the Aircrew Survival Equipment School.

QUALITY ASSURANCE INSPECTION. An inspection of work by someone other than the person performing the work. Quality assurance inspections ensure that critical procedures in a job and the job as a whole are performed correctly and are not a threat to safety or function.

R. Abbreviation for radius.

RAVEL (UNRAVEL). To separate, untwist or unwind, leaving a frayed or ragged edge. RAVEL is the preferred work to describe such a condition.

REF. Abbreviation for reference.

REFURBISH. To restore to original condition.

REPAIRS, MAJOR. Repairs requiring special equipment, personnel or materials not normally available at intermediate level of maintenance.

REPAIRS, MINOR. Repairs that can be performed at organizational or intermediate levels of maintenance.

RIG. To assemble and adjust; to equip.

SAFETY TIE. Low strength thread which serves to inhibit accidental opening, discharge or separation.

SAFETY WIRE. Low strength wire which serves to inhibit premature opening, discharge or separation.

SCRAP. To discard, with proper authorization, items, parts or materials which are obsolete or no longer useable.

SEAM. A series of stitches joining two or more pieces of cloth.

SEAR. To melt or seal with heat, for example, to sear the end of nylon webbing one heats the end until the nylon melts and fuses. This prevents raveling.

SM&R CODES. Abbreviation for source, maintenance and recoverability codes. Comprised of three parts; a two-position source code, a three position maintenance code, and a one-position recoverability code. Refer to NAVSUPINST 4423.29 for further details.

STIRRUP. A cloth or leather strip sewn across the cuff of a pant leg to form a loop. When the pants are put on, the stirrup, which is worn under the foot, prevents the pant leg from riding up.

STITCHES PER INCH. The number of needle penetrations where threads are interlaced, per linear inch.

STOWING. The act of putting away in a neat, orderly fashion.

SURVIVAL VEST. A vest constructed of nylon cloth and equipped with pockets and attachments for stowage of survival items.

SUIT, ANTI-EXPOSURE. A garment worn to provide protection in adverse, low temperature conditions.

TACK. To attach temporarily prior to final sewing. Also, to tie temporarily as an aid in positioning. Also, to permanently secure portions of a seat survival kit assembly together.

TAPE. A narrow, woven ribbon of cotton, linen, nylon or other material.

TEMPLATE. A pattern or gage commonly in the form of a thin plate of cardboard, wood or metal. It is used as a guide in the layout or cutting of flat work.

TYP. Abbreviation for typical.

UNRAVEL. See RAVEL.

V-RING. A metal fitting shaped in the form of a closed letter "V".

VRHMU. Abbreviation for visor reticle helmet mounted unit. A one-piece visor housing that contains a parabolic visor and four electronic sensor assemblies which are mounted, two per side.

VTAS. Abbreviation for visual target acquisition system. A helmet sight system which allows the pilot to direct his fire control system by viewing a prospective target.

WAFFLE WEAVE. A type of weave used in making cloth. It has a pattern of small raised squares. The squares provide dead-air space for improved insulation.

WARNING. Indicates danger to personnel. A warning precedes the item or step to which it refers.

WARP. The threads that run parallel to the selvage edge of cloth; those that are crossed by the filling threads.

WEBBING. A strong, narrow closely-woven tape of synthetic cotton or linen fiber designed for bearing weight.

WEBBING, TUBULAR. Strong synthetic or natural fiber webbing woven in the form of a tube.

WOLVERINE FUR. A long, straight light-weight fur from the wolverine; usually dark brown and black in color. Wolverine fur does not collect moisture and frost in cold weather and is, therefore, used to trim collars and hoods on winter clothing.

X. Abbreviation for times or by; sign for multiplication.

THIS PAGE INTENTIONALLY LEFT BLANK.

ALPHABETICAL INDEX

Subject — Paragraph, Figure, Table Number

A

Accident Evaluation 2-6A
Adjustment
  Visor/Mask Interface
    Enhanced Pressure-Demand Oxygen Masks 6-28
    Pressure-Demand Oxygen Masks 5-43A
Application
  Auxiliary Personal Equipment
    Boom Microphone Light, ML-8 8-7
    Microphone Mount on T-Bayonet 8-42
    Parachutists Goggles 8-21
  Helmet Assemblies
    Cloth 7-9
      Custom Fit Ear Plugs 7-12
      General Use Ear Plugs 7-12
      HGU-24/P Helmet Assembly 7-10
      HGU-25(V)2/P Helmet Assembly 7-11
    Rotary Wing 3-18, T3-2
    TACTAIR 4-26, T4-2
  Oxygen Mask Assemblies
    Enhanced Pressure-Demand
      MBU-23(V)/P Series 6-16, T6-2
      MBU-24/P22P-16 Oxygen Mask Assembly 6-69
    Pressure-Demand 5-28, T5-2
Assembly
  Helmet Assemblies
    Cloth 7-23
      HGU-24/P Helmet Assembly 7-24
      HGU-25(V)2/P Helmet Assembly 7-26
    Rotary Wing 3-26, T3-4
    TACTAIR 4-38
      HGU-68(V)/P Helmet Assembly T4-4
      HGU-85(V)/P Helmet Assembly T4-5
      HGU-87(V)/P22P-16 Helmet Assembly T4-6
      HGU-89/P22P-16 Helmet Assembly T4-7
  Oxygen Mask Assemblies
    Enhanced Pressure-Demand
      MBU-23(V)/P Series 6-52
      MBU-24/P22P-16 Oxygen Mask Assembly 6-87
    Pressure-Demand 5-6
      Order of Assembly
        MBU-14(V)1/P Oxygen Mask Assembly 5-7, F5-1, T5-4
        MBU-15/P Oxygen Mask Assembly 5-8, F5-2, T5-5
        MBU-16/P Oxygen Mask Assembly 5-9, F5-3, T5-6
        MBU-17(V)1/P Oxygen Mask Assembly 5-10, F5-4, T5-7
        MBU-17(V)2/P Oxygen Mask Assembly 5-11, F5-5, T5-8
        MBU-17(V)5/P Oxygen Mask Assembly 5-12, F5-6, T5-9
        MBU-17(V)6/P Oxygen Mask Assembly 5-12A, T5-9A
        MBU-17(V)8/P Oxygen Mask Assembly 5-12B, T5-9B

ALPHABETICAL INDEX (Cont)

Subject — Paragraph, Figure, Table Number

A (Cont)

Auxiliary Personal Equipment . . . 8-1
  Boom Microphone Light, ML-8 . . . 8-3
  Microphone Mount on T-Bayonet . . . 8-38
  Parachutists Goggles . . . 8-17

B

Boom Microphone Light, ML-8 . . . 8-3

C

Cleaning
  Auxiliary Personal Equipment
    Parachutists Goggles . . . 8-34
  Helmet Assemblies
    Cloth
      HGU-24/P Helmet Assembly . . . 7-39
      HGU-25(V)2/P Helmet Assembly . . . 7-39
    Rotary Wing . . . 3-73
    TACAIR . . . 4-75
      HGU-33/P thru HGU-52/P and HGU-55/P Series Only . . . 4-114
  Oxygen Mask Assemblies
    Enhanced Pressure-Demand
      MBU-23(V)/P Series . . . 6-51
        Inhalation/Exhalation Valve . . . F6-14
      MBU-24/P 22P-16 Oxygen Mask Assembly . . . 6-86
    Pressure-Demand . . . 5-66
Components
  Helmet Assemblies
    Cloth
      HGU-24/P Helmet Assembly . . . T7-1
      HGU-25(V)2/P Helmet Assembly . . . T7-1
    Rotary Wing . . . 3-5
      CBR Receiver Components . . . 3-14, F3-10
      Communications System Components . . . 3-11, F3-7
      Earcup Assemblies . . . 3-8, F3-4
      Helmet Shell Assembly . . . 3-6, F3-2
      Helmet Sight Assembly (HSA) (HGU-67/P Only) . . . 3-13, F3-9
      Integrated Chin/Nape Assembly . . . 3-9, F3-5
      NVIIS Components . . . 3-12, F3-8
      PRU-52/P Thermoplastic Liner (TPL) . . . 3-7, F3-3
      Visor Assemblies . . . 3-10, F3-6
    TACAIR . . . 4-12
      Bayonet Receiver Assembly . . . 4-21
      Boom Microphone Assembly . . . 4-20
      Communication Cable Assemblies . . . 4-19
      PRU-52/P Thermoplastic Liner (TPL) . . . 4-15
      PRU-55/P Helmet Shell . . . 4-13

ALPHABETICAL INDEX (Cont)

Subject — Paragraph, Figure, Table Number

C (Cont)

Components (Cont)
Helmet Assemblies (Cont)
TACAIR (Cont)
PRU-58/P Helmet Shell . . . 4-14
Visor Assemblies
Lightweight . . . 4-17
Safety . . . 4-18
Single Lens . . . 4-16
Oxygen Mask Assemblies
Enhanced Pressure-Demand
MBU-23(V)/P Series . . . F6-1 thru F6-7
MBU-24/P22P-16 Oxygen Mask Assembly . . . F6-24
Pressure-Demand . . . 5-13, T5-1
AM-7067/A Amplifier . . . 5-18
Bayonet Receivers . . . 5-15
Communication Cable Assemblies . . . 5-17
M-101/AIC Microphone . . . 5-18
MBU-12/P Oxygen Mask Subassembly . . . 5-14
Offset Bayonets . . . 5-15
Oxygen Mask Storage Bag . . . 5-20
Oxygen Regulator Connectors . . . 5-16
Oxygen Regulators . . . 5-16
Configuration
Auxiliary Personal Equipment
Boom Microphone Light, ML-8 . . . 8-5
Microphone Mount on T-Bayonet . . . 8-40
Parachutist Goggles . . . 8-19
Helmet Assemblies
Cloth . . . 7-3
Custom Fit Ear Plugs . . . 7-8
General Use Ear Plugs . . . 7-7
HGU-24/P Helmet Assembly . . . 7-5, F7-1
HGU-25(V)2/P Helmet Assembly . . . 7-6, F7-2
Rotary Wing . . . 3-3, T3-1, T3-1A
HGU-67/P Helmet Assembly . . . 3-3
HGU-84/P Helmet Assembly . . . 3-3
TACAIR . . . 4-4, T4-1
HGU-66(V)/P Helmet Assembly . . . 4-7
HGU-68(V)/P Helmet Assembly . . . 4-8
HGU-85(V)/P Helmet Assembly . . . 4-9
HGU-85(V)1/P Helmet Assembly . . . 4-9
HGU-87(V)/P22P-16 Helmet Assembly . . . 4-10
HGU-89/P22P-16 Helmet Assembly . . . 4-11
Oxygen Mask Assemblies
Enhanced Pressure-Demand
MBU-23(V)/P Series . . . 6-6, T6-1
MBU-24/P22P-16 Oxygen Mask Assembly . . . 6-67, F6-24
Pressure-Demand . . . 5-1, T5-1

ALPHABETICAL INDEX (Cont)

Subject	Paragraph, Figure, Table Number
D	
Description	
Auxiliary Personal Equipment	8-1
Boom Microphone Light, ML-8	8-3
Parachutist Goggles	8-17
Helmet Assemblies	
Cloth	7-1
HGU-24/P Helmet Assembly	7-5
HGU-25(V)2/P Helmet Assembly	7-6
Rotary Wing	3-1
HGU-67/P Helmet Assembly	3-1
HGU-84/P Helmet Assembly	3-1
TACAIR	4-1
HGU-66(V)/P Helmet Assembly	4-7
HGU-68(V)/P Helmet Assembly	4-8
HGU-85(V)/P Helmet Assembly	4-9
HGU-85(V)1/P Helmet Assembly	4-9
HGU-87(V)/P22P-16 Helmet Assembly	4-10
HGU-89/P22P-16 Helmet Assembly	4-11
NAVAIR 13-1-6.7-3	1-7
Comments and Recommendations	1-13
Conflicts and Supersedures	1-9
Contents	1-8
Engineering Drawings	1-14
Quality Assurance	1-16
Technical Directives and Forms	1-15
Updating	1-12
Oxygen Mask Assemblies	
Enhanced Pressure-Demand	6-1
MBU-23(V)/P Series	6-3
MBU-24/P22P-16 Oxygen Mask Assembly	6-65
Pressure-Demand	5-1
Disassembly	
Oxygen Mask Assemblies	
Enhanced Pressure-Demand	
MBU-23(V)/P Series	6-50
MBU-24/P22P-16 Oxygen Mask Assembly	6-85
Pressure-Demand	5-64
Disposal	
Laser Eye Protective Visor	4-67, 4-112
E	

ALPHABETICAL INDEX (Cont)

Subject	Paragraph, Figure, Table Number
F	
Fabrication	
Auxiliary Personal Equipment	
Parachutist Goggles	8-35
Dual Snap Fastener	8-37
Helmet Assemblies	
Rotary Wing	T3-7, T3-8
Battery Securing Patch, Extra-Large/Extra-Large Wide	3-108, F3-14
Battery Securing Patch, Medium/Large	3-107, F3-13
Low Profile Battery Compartment Power Cable Securing Patch	3-31B
Removable Camouflage Helmet Cover	3-110, F3-15 thru F3-20
Removable Camouflage Helmet Cover	4-100
Oxygen Mask Assemblies	
Enhanced Pressure-Demand	
Inhalation/Exhalation Spanner Wrench	6-61, F6-16
Securing Fastener (MBU-23(V)/P)	6-61A
Securing Fastener (MBU-24/P22P-16)	6-98A
Pressure-Demand	T5-11
Bayonet Receiver Shim	5-43
Securing Fastener	5-52
Storage Bag	5-85, F5-15
Inner Tab	5-86
Fitting	
Helmet Assemblies	
Rotary Wing	3-51
CBR Adapter Strap Assemblies Preliminary Fitting	3-58
Communications Ear Plug (CEP) Fitting (HGU-84/P and HGU-67/P)	3-47B
Helmet Fitting	3-53
Thermoplastic Liner (TPL) Fitting	3-54
Thermoplastic Liner (TPL) Custom Fitting	3-55, T3-5
TACAIR	4-48
Helmet Components	4-50
PRU-52/P Thermoplastic Liner (TPL)	4-51, T4-8
Helmet Bladder Supply Hose	6-79
Oxygen Mask Assemblies	
Enhanced Pressure-Demand	
MBU-23(V)/P Series	6-25
MBU-24/P22P-16 Oxygen Mask Assembly	6-75
Function	
Oxygen Mask Assemblies	
Pressure-Demand	5-21
Combination Inhalation/Exhalation Valve	F5-7 thru F5-9
G	
Group Assembly Parts List	2-13
Description Column	2-17
Attaching Parts	2-19
Indentation	2-18

ALPHABETICAL INDEX (Cont)

Subject — Paragraph, Figure, Table Number

G (Cont)

Group Assembly Parts List (Cont)
- Figure and Index Number Column 2-15
- Part Number Column 2-16
- Units Per Assembly Column 2-20
- Usable on Code Column 2-21

H

Helmet Assemblies
- HGU-24/P Helmet Assembly 7-5, F7-1
- HGU-25(V)2/P Helmet Assembly 7-56, F7-2
- HGU-56(V)/P Helmet Assembly 4-1
- HGU-67/P Helmet Assembly 3-1
- HGU-68(V)/P Helmet Assembly 4-1, T4-2A, T4-2B, T4-2C, T4-2D
- HGU-84/P Helmet Assembly 3-1, F3-1
- HGU-85(V)/P Helmet Assembly 4-1
- HGU-85(V)1/P Helmet Assembly 4-1, T4-2B, T4-2D
- HGU-87(V)/P22P-16 Helmet Assembly 4-1, T4-2C
- HGU-89/P22P-16 Helmet Assembly 4-1, T4-2D

I

Illustrated Parts Breakdown 2-10
- Group Assembly Parts List 2-13
- Helmet Assemblies
  - Cloth
    - HGU-24/P Helmet Assembly 7-52, F7-3
    - HGU-25(V)2/P Helmet Assembly 7-52, F7-3
  - Rotary Wing 3-11
    - CBR Adapter Strap Assembly Fitting Kit F3-32
    - Earcup Assembly F3-25
    - Gunsight Wiring Harness Assembly F3-30
    - Helmet Assembly, HGU-84/P F3-23
    - Helmet Shell Assembly F3-24
    - HGU-67/P Helmet Assembly Components F3-22
    - HGU-84/P Helmet Assembly Components F3-21
    - Integrated Chin/Nape Assembly F3-26
    - Quick Don Mount Assembly F3-28
    - Thermoplastic Liner (TPL) Assembly F3-27
  - TACAIR 4-102
    - Earcup Assembly F4-7
    - EHU-7/P Visor Assembly F4-9
    - HGU-68(V)/P Helmet Assembly F4-2
    - HGU-85(V)/P Helmet Assembly F4-3
    - HGU-87(V)/P22P-16 Helmet Assembly F4-4
    - HGU-89/P22P-16 Helmet Assembly F4-5

ALPHABETICAL INDEX (Cont)

Subject — Paragraph, Figure, Table Number

I (Cont)

Illustrated Parts Breakdown (Cont)
- Helmet Assemblies (Cont)
  - TACAIR (Cont)
    - PRU-52/P Thermoplastic Liner (TPL) Assembly . . . F4-10
    - PRU-53/P Chin/Nape Strap Assembly . . . F4-8
    - PRU-55/P Helmet Shell Assembly . . . F4-6
- Numerical Index . . . 2-22
- Oxygen Mask Assemblies
  - Enhanced Pressure-Demand
    - MBU-23(V)/P Series . . . 6-62
      - MBU-23(V)1/P Oxygen Mask Assembly . . . F6-23
      - MBU-23(V)2/P Oxygen Mask Assembly . . . F6-17
      - MBU-23(V)3/P Oxygen Mask Assembly . . . F6-18
      - MBU-23(V)4/P Oxygen Mask Assembly . . . F6-19
      - MBU-23(V)5/P Oxygen Mask Assembly . . . F6-20
      - MBU-23(V)6/P Oxygen Mask Assembly . . . F6-21
      - MBU-23(V)7/P Oxygen Mask Assembly . . . F6-22
    - MBU-24/P 22P-16 Oxygen Mask Assembly . . . 6-99, F6-26
  - Pressure-Demand . . . 5-88
    - MBU-12/P Oxygen Mask Assembly . . . F5-22
    - MBU-14(V)1/P Oxygen Mask Assembly . . . F5-16
    - MBU-15/P Oxygen Mask Assembly . . . F5-17
    - MBU-16/P Oxygen Mask Assembly . . . F5-18
    - MBU-17(V)1/P Oxygen Mask Assembly . . . F5-19
    - MBU-17(V)2/P Oxygen Mask Assembly . . . F5-20
    - MBU-17(V)5/P Oxygen Mask Assembly . . . F5-21
- Symbols and Abbreviations . . . 2-12

Inspections
- Auxiliary Personal Equipment
  - Boom Microphone Light, ML-8 . . . 8-13
    - Postflight Inspection . . . 8-14
    - Preflight Inspection . . . 8-14
    - Special Inspection . . . 8-15
    - Visual Inspection . . . 8-16
  - Microphone Mount on T-Bayonet . . . 8-48
    - Postflight Inspection . . . 8-49
    - Preflight Inspection . . . 8-49
    - Special Inspection . . . 8-50
  - Parachutist Goggles . . . 8-29
    - Acceptance Inspection . . . 8-30
    - Postflight Inspection . . . 8-31
    - Preflight Inspection . . . 8-31
    - Special Inspection . . . 8-30
    - Visual Inspection . . . 8-32
- Helmet Assemblies
  - Cloth . . . 7-34
    - Functional Inspection . . . 7-38
    - Pre-Operation/Post-Operation Inspections . . . 7-35
    - Special Inspection . . . 7-36
    - Visual Inspection . . . 7-37

ALPHABETICAL INDEX (Cont)

Subject — Paragraph, Figure, Table Number

I (Cont)

Inspections (Cont)
Helmet Assemblies (Cont)
Rotary Wing . . . 3-65
Functional Check . . . 3-67
Boresighting . . . 3-71
Communications System . . . 3-68
HSA Wiring Harness Assembly . . . 3-70
NVIIS Wiring Harness Assembly . . . 3-69
Quick Don Mount Assembly . . . 3-72
Postflight Inspection . . . 3-64
Preflight Inspection . . . 3-64
Special Inspection . . . 3-65
Visual Inspection . . . 3-66
TACAIR . . . 4-62
Functional Check . . . 4-66
HGU-33/P thru HGU-52/P and HGU-55/P Series Only . . . 4-107
Functional Check . . . 4-111
Postflight Inspection . . . 4-108
Preflight Inspection . . . 4-108
Special Inspection . . . 4-109
Visual Inspection . . . 4-110
Postflight Inspection . . . 4-63
Preflight Inspection . . . 4-63
Special Inspection . . . 4-64
Visual Inspection . . . 4-65
Oxygen Mask Assemblies
Enhanced Pressure-Demand
MBU-23(V)/P Series . . . 6-45
Functional Check
Oxygen Mask Assembly . . . 6-49
Regulator-to-Seat Kit Hose Assembly . . . 6-49
Place-in-Service Inspection . . . 6-44
Postflight Inspection . . . 6-45
Preflight Inspection . . . 6-45
Special Inspection . . . 6-46
Visual Inspection
Oxygen Mask Assembly . . . 6-47
Regulator-to-Seat Kit Hose Assembly . . . 6-48
MBU-24/P 22P-16 Oxygen Mask Assembly . . . 6-83
Functional Check
Oxygen Mask Assembly . . . 6-84
Regulator-to-Seat Kit Hose Assembly . . . 6-84
Pressure-Demand . . . 5-57
Functional Check
Oxygen Mask Assembly . . . 5-62
Regulator-to-Seat Kit Hose Assembly . . . 5-63

ALPHABETICAL INDEX (Cont)

Subject — Paragraph, Figure, Table Number

I (Cont)

Inspections (Cont)
- Oxygen Mask Assemblies (Cont)
  - Pressure-Demand (Cont)
    - Postflight Inspection . . . 5-58
    - Preflight Inspection . . . 5-58
    - Special Inspection . . . 5-59
    - Visual Inspection
      - Oxygen Mask Assembly . . . 5-60
      - Regulator-to-Seat Kit Hose Assembly . . . 5-61

Installation
- Auxiliary Personal Equipment
  - Boom Microphone Light, ML-8 . . . 8-9
  - Microphone Mount on T-Bayonet . . . 8-44
- Helmet Assemblies
  - Cloth . . . 7-27
    - Pile Fastener Tape . . . 7-29
    - Reflective Tape . . . 7-28
    - Tempest Communications Assembly, MK-1564/AIC (HGU-24/P) . . . 7-25
  - Rotary Wing
    - Amplifier, M23595/1-2 (AM-3597C/A) . . . 3-46
    - Amp Mounting Bracket . . . 3-45
    - Battery Compartment Securing Patch . . . 3-31
    - Bayonet Receiver Assembly . . . 3-49
    - Boom Microphone Assembly . . . 3-41
    - Cable Assemblies, CX-4708A/AIC and CX-13155/A or CX-13164/A . . . 3-42
    - Cable Assembly, CX-4832A/AR or CX-12972/AR . . . 3-44
    - Cable Assembly, M22442/57-1 or M22442/61-1 . . . 3-40
    - CBR Adapter Strap Assemblies . . . 3-58
    - Communications Earplug (CEP) (HGU-84/P and HGU-67/P) . . . 3-47A
    - Earcup Assemblies . . . 3-47
    - Earphones, H-87B/U . . . 3-47
    - Energy-Absorbing Liner . . . 3-38
    - Gunsight Receptacle Assembly . . . 3-37
    - HSA Wiring Harness . . . 3-36
    - Low Profile Battery Compartment Mounting Bracket . . . 3-31A
    - NVIIS Wiring Harness . . . 3-35
    - Quick Don Mount Assembly . . . 3-50
    - Reflective Tape . . . 3-30
    - Strobe Light Securing Patch . . . 3-32
    - Tempest Communications Assembly, MK-1564/AIC (HGU-84/P) . . . 3-44A
    - Thermoplastic Liner (TPL) . . . 3-52
    - Visor Assemblies . . . 3-48, T3-1A
    - Visor Cover . . . 3-48, T3-1A
    - Zetaliner . . . 3-55
  - TACAIR
    - Amplifier, M23595/1-2 (AM-3597C/A) . . . 4-45
    - Amp Mounting Bracket . . . 4-45
    - Bayonet Receiver Assembly . . . 4-53
    - Boom Microphone Assembly . . . 4-45

ALPHABETICAL INDEX (Cont)

Subject — Paragraph, Figure, Table Number

I (Cont)

Installation (Cont)
Helmet Assemblies (Cont)
TACAIR (Cont)
Boom Swivel Assembly 4-45
Cable Assembly, CX-4832/AR or CX-12972/AR 4-47
CBR Receivers 4-54
Helmet Bladder Kit, KMU-561/P22P-16 4-41
Oregon Aero Hush Kit Combo 4-81
Oregon Aero Soft-Seal Ear Cushions 4-81
Pile Fastener Tape 4-57
PRU-52/P Thermoplastic Liner (TPL) 4-49
Reflective Tape 4-40
Visor Assemblies
Lightweight Laser Eye Protective Visor, 86B7361-9 . . . . . 4-55, T4-2B, T4-2D
Lightweight Visor, 81D5189 . . . . . 4-55, T4-2B, T4-2D
Safety Visor, Laser Eye Protective, 00C11176-5 or 00C11176-7 Series 4-55, T4-2B, T4-2D
Safety Visor, 88C7538 . . . . . 4-55, T4-2B, T4-2D
Safety Visor, 00C11176 Series 4-55, T4-2B, T4-2D
Single Visor Assembly 4-56
Zetaliner 4-52
Oxygen Mask Assemblies
Enhanced Pressure-Demand
MBU-23(V)/P Series 6-29, T6-4
AM-7067A/A Amplifier 6-34
Bayonet Receiver 6-31, T6-9
Bayonet Receiver Shim 6-32
Cable Assembly, CX-13017/AR 6-37
Cable Assembly, CX-13126A/A 6-36
Cable Assembly, CX-13127/A 6-36
Cable Assembly, CX-13154/A 6-35
Cable Assembly, CX-4434/U 6-35
CRU-79/P Series Miniature Oxygen Regulator 6-39
Regulator without 90° Elbow Installed F6-10
Electrical Tiedown Strap 6-60
M-101/AIC Microphone 6-33, 6-34
Oxygen Regulator Connectors, CRK-90 6-38
Oxygen Regulator Connectors, MC-3A 6-38
P/N N00493-00 Microphone/Amplifier (MV-22 Oxygen Mask) 6-34A
Receptacle 6-35
Securing Fastener (MBU-23(V)/P) 6-61A
Securing Fastener (MBU-24/P22P-16) 6-98A
Torso/Chest Mounted Oxygen Regulator 6-40
MBU-24/P22P-16 Oxygen Mask Assembly
Strain Relief Cord F6-25
Pressure-Demand T5-11
AM-7067/A Amplifier 5-45
Bayonet Receiver 5-42

ALPHABETICAL INDEX (Cont)

Subject — Paragraph, Figure, Table Number

I (Cont)

Installation (Cont)
- Oxygen Mask Assemblies (Cont)
  - Pressure-Demand (Cont)
    - Bayonet Receiver Shim . . . 5-43
    - Cable Assembly, CX-13017/AR . . . 5-51
    - Cable Assembly, CX-13126A/A . . . 5-47
    - Cable Assembly, CX-13127/A . . . 5-47
    - Cable Assembly, CX-13154/A . . . 5-46
    - Cable Assembly, CX-4434/U . . . 5-46
    - Cable Assembly, M22442/33-4707 . . . 5-47
    - CRU-79/P Series Miniature Oxygen Regulator . . . 5-49
      - Regulator without 90° Elbow Installed . . . F5-10
    - Electrical Tiedown Straps . . . 5-83
    - M-101/AIC Microphone . . . 5-44, 5-45
    - Pad Adapter . . . 5-36
    - P/N 00493-00 Microphone/Amplifier (MV-22 Oxygen Mask) . . . 5-45A
    - Oxygen Mask Securing Fastener . . . 5-52
    - Oxygen Mask Storage Bag . . . 5-87
      - Inner Tab . . . 5-86
    - Oxygen Regulator Connectors, CRK-90 . . . 5-48
    - Oxygen Regulator Connectors, MC-3A . . . 5-48
    - Torso/Chest Mounted Oxygen Regulator . . . 5-50
      - Regulator with Modified 90° Elbow Adapter . . . F5-13
      - Regulator with Straight Flared Adapter . . . F5-12

Introduction . . . 1-1
- Description of NAVAIR 13-1-6.7-3 . . . 1-7
- Levels of Maintenance . . . 1-17
- Supplementary Publications . . . 1-19

J

K

L

M

Maintenance
- Auxiliary Personal Equipment
  - Boom Microphone Light, ML-8 . . . 8-11
  - Microphone Mount on T-Bayonet . . . 8-46
  - Parachutists Goggles . . . 8-27
- Concepts . . . 2-1
  - Levels of Maintenance . . . 2-3

ALPHABETICAL INDEX (Cont)

Subject — Paragraph, Figure, Table Number

M (Cont)

Maintenance (Cont)
- Concepts (Cont)
  - Naval Aviation Maintenance Program . . . 2-2
  - Qualified Personnel . . . 2-4
- Documents . . . 2-7
  - Documenting Maintenance Actions . . . 2-8
  - Maintenance Documents . . . 2-9
- Helmet Assemblies
  - Cloth . . . 7-32
  - Rotary Wing . . . 3-61
  - TACAIR . . . 4-60
    - HGU-33/P thru HGU-52/P and HGU-55/P Series Only . . . 4-105
- Levels of Maintenance . . . 1-17
- Oxygen Mask Assemblies
  - Enhanced Pressure-Demand
    - MBU-23(V)/P Series . . . 6-41
      - Electrical Tiedown Strap Removal . . . F6-15
    - MBU-24/P 22P-16 Oxygen Mask Assembly . . . 6-81
  - Pressure-Demand . . . 5-55
- Scheduling . . . 2-5
  - Inspection Cycles . . . 2-6

MBU-12/P Oxygen Mask Assembly . . . 5-14
MBU-14(V)1/P Oxygen Mask Assembly . . . 5-7, F5-1
MBU-15/P Oxygen Mask Assembly . . . 5-8, F5-2
MBU-16/P Oxygen Mask Assembly . . . 5-9, F5-3
MBU-17(V)1/P Oxygen Mask Assembly . . . 5-10, F5-4
MBU-17(V)2/P Oxygen Mask Assembly . . . 5-11, F5-5
MBU-17(V)5/P Oxygen Mask Assembly . . . 5-12, F5-6
MBU-17(V)6/P Oxygen Mask Assembly . . . 5-12A
MBU-17(V)8/P Oxygen Mask Assembly . . . 5-12B
MBU-23(V)1/P Oxygen Mask Assembly . . . F6-1
MBU-23(V)2/P Oxygen Mask Assembly . . . 6-10, F6-2
MBU-23(V)3/P Oxygen Mask Assembly . . . 6-11, F6-3
MBU-23(V)4/P Oxygen Mask Assembly . . . 6-12, F6-4
MBU-23(V)5/P Oxygen Mask Assembly . . . 6-13, F6-5
MBU-23(V)6/P Oxygen Mask Assembly . . . 6-14, F6-6
MBU-23(V)7/P Oxygen Mask Assembly . . . 6-15, F6-7
MBU-24/P 22P-16 Oxygen Mask Assembly . . . 6-65, F6-24
Microphone Mount on T-Bayonet . . . 8-38
Modifications
- Auxiliary Personal Equipment
  - Parachutist Goggles . . . 8-25
- Helmet Assemblies
  - Cloth . . . 7-30, T7-3
  - Rotary Wing . . . 3-59
    - Helmet Shell Conversion from HGU-84/P to HGU-67/P . . . 3-33
  - TACAIR . . . 4-58

ALPHABETICAL INDEX (Cont)

Subject — Paragraph, Figure, Table Number

M (Cont)

Modifications (Cont)
- Oxygen Mask Assemblies
  - Enhanced Pressure-Demand
    - MBU-23(V)/P Series . . . 6-20, T6-3
      - Hardshell Alteration . . . 6-26
      - Softshell Trimming . . . 6-27
    - MBU-24/P 22P-16 Oxygen Mask Assembly . . . 6-73, T6-5
  - Pressure-Demand . . . 5-53, T5-10

N

Numerical Index . . . 2-22
- Figure and Index Number Column . . . 2-25
- Part Number Column . . . 2-24
- Source, Maintenance and Recoverability (SM&R) Code Column . . . 2-26, T2-1

O

Oxygen Mask Assemblies
- Enhanced Pressure-Demand . . . 6-1
  - MBU-23(V)/P Series . . . 6-3, F6-1 thru F6-7
  - MBU-24/P 22P-16 Oxygen Mask Assembly . . . 6-65, F6-24
- Pressure-Demand . . . 5-1
  - MBU-12/P Oxygen Mask Assembly . . . 5-14
  - MBU-14(V)1/P Oxygen Mask Assembly . . . 5-7, F5-1
  - MBU-15/P Oxygen Mask Assembly . . . 5-8, F5-2
  - MBU-16/P Oxygen Mask Assembly . . . 5-9, F5-3
  - MBU-17(V)1/P Oxygen Mask Assembly . . . 5-10, F5-4
  - MBU-17(V)2/P Oxygen Mask Assembly . . . 5-11, F5-5
  - MBU-17(V)5/P Oxygen Mask Assembly . . . 5-12, F5-6
  - MBU-17(V)6/P Oxygen Mask Assembly . . . 5-12A
  - MBU-17(V)8/P Oxygen Mask Assembly . . . 5-12B

P

Parachutists Goggles . . . 8-17

Q

R

Reference Numbers, Items, and Supply Data
- Helmet Assemblies
  - Cloth . . . 7-13
  - Rotary Wing . . . 3-20
  - TACTAIR . . . 4-28

ALPHABETICAL INDEX (Cont)

Subject — Paragraph, Figure, Table Number

R (Cont)

Reference Numbers, Items, and Supply Data (Cont)
Oxygen Mask Assemblies
Pressure-Demand . . . 5-30
Repair
Auxiliary Personal Equipment
Parachutists' Goggles . . . 8-35
Minor Repairs . . . 8-36
Helmet Assemblies
Cloth . . . T7-4
Rotary Wing . . . 3-75, T3-7, T3-8
Edge Roll . . . 3-103A
Helmet Shell Assembly . . . 3-103
Integrated Chin/Nape Assembly Components . . . 3-88
TACAIR . . . 4-77, T4-9
Edge Roll . . . 4-101A
Helmet Shell . . . 4-101
Oxygen Mask Assemblies
Enhanced Pressure-Demand
MBU-23(V)/P Series . . . 6-54
MBU-24/P, 22P-16 Oxygen Mask Assembly . . . 6-88
Pressure-Demand . . . 5-71, T5-11
Replacement
Auxiliary Personal Equipment
Parachutists' Goggles . . . 8-35
Dual Snap Fastener . . . 8-37
Helmet Assemblies
Cloth . . . 7-41, T7-4
Cloth Helmet Assembly . . . 7-48
Earphone . . . 7-45
Earseal . . . 7-47
Goggle . . . 7-51
Microphone Element . . . 7-46
Pile Fastener Tape . . . 7-44
Reflective Tape . . . 7-43
Snap Fastener Stud and Post . . . 7-50
Snap Fastener Tab . . . 7-49
Rotary Wing . . . 3-75, T3-7, T3-8
Battery Compartment Securing Patch . . . 3-105
Bayonet Receiver Assembly . . . 3-95
Boom Microphone Assembly . . . 3-84
Boom Swivel Assembly . . . 3-85
Cable Assemblies, CX-4708A/AIC and CX-13155/A or CX-13164/A . . . 3-81
Cable Assembly, CX-4832A/AR or CX-12972/AR . . . 3-83
Cable Assembly, M22442/57-1 or M22442/61-1 . . . 3-80
CBR Snap Fastener Stud . . . 3-96
Chin Pad . . . 3-92
Chin Strap . . . 3-90
Clamp, Chin Strap . . . 3-91
Earcup Assembly . . . 3-79

ALPHABETICAL INDEX (Cont)

Subject — Paragraph, Figure, Table Number

R (Cont)

Replacement (Cont)
Helmet Assemblies (Cont)
Rotary Wing (Cont)
Energy-Absorbing Liner . . . 3-94
Gunsight Receptacle Bracket . . . 3-101
Helmet Block Assembly . . . 3-98
Helmet Shell Assembly . . . 3-102, TA 3-9, TA 3-10
HSA Wiring Harness . . . 3-100
Integrated Chin/Nape Assembly . . . 3-93
Nape Pad . . . 3-89
NVIIS Wiring Harness . . . 3-99
Strobe Light Securing Patch . . . 3-104
Thermoplastic Liner (TPL) . . . 3-77
Visor Assemblies . . . 3-76, TA 3-1A
Visor Snap Fastener Stud . . . 3-97
Zetaliner . . . 3-77
TACAIR . . . 4-77, TA 4-9
Amplifier, M23595/1-2 (AM-3597C/A) . . . 4-91
Amp Mounting Bracket . . . 4-92
Bayonet Receiver Assembly . . . 4-97
Boom Microphone Assembly . . . 4-90
Cable Assembly, CX-4434/U . . . 4-93
Cable Assembly, CX-4708A/AIC . . . 4-87
Cable Assembly, CX-4832A/AR or CX-12972/AR . . . 4-89
Chin Pad . . . 4-96
Chin Strap . . . 4-96
Earcup Assembly . . . 4-81
Earphone Assembly . . . 4-81
Energy Absorbing Liner . . . 4-86
Helmet Bladder Assembly, KMU-561/P22P-16 . . . 4-99
MK-634/AIC Cable Clip . . . 4-87
Nape Pad . . . 4-95
Nape Strap . . . 4-95
Pile Fastener Tape . . . 4-80
PRU-52/P Thermoplastic Liner (TPL) . . . 4-84
PRU-52/P Thermoplastic Liner Components . . . 4-85
PRU-53/P Chin/Nape Strap Assembly . . . 4-95
PRU-55/P Helmet Shell . . . 4-101
PRU-58/P Helmet Shell . . . 4-101
Reflective Tape . . . 4-79
Single Visor Assembly . . . 4-82
Single Visor Lens . . . 4-83, TA 4-2A, TA 4-2C
Zetaliner . . . 4-84
Oxygen Mask Assemblies
Enhanced Pressure-Demand
MBU-23(V)/P Series . . . 6-54
Cable Assembly, CX-13126A/A . . . 6-59

ALPHABETICAL INDEX (Cont)

Subject — Paragraph, Figure, Table Number

R (Cont)

Replacement (Cont)
- Oxygen Mask Assemblies (Cont)
  - Enhanced Pressure-Demand (Cont)
    - MBU-23(V)/P Series (Cont)
      - Facepiece/Hardshell Retaining Strap . . . 6-55
      - Inhalation/Exhalation Valve . . . 6-57
      - M-101/AIC Microphone . . . 6-56
      - Oxygen Delivery Hose . . . 6-58
      - Bladder Inlet Quick Disconnect . . . 6-92
    - MBU-24/P22P-16 Oxygen Mask Assembly . . . 6-88
      - 3-Pin Connector . . . 6-97
      - Cable Assembly, CX-13126A/A . . . 6-96
      - Facepiece/Hardshell Retaining Strap . . . 6-89
      - Helmet Bladder Supply Hose . . . 6-93
      - Helmet Bladder Supply Hose Extension . . . 6-94
      - M-101/AIC Microphone . . . 6-90
      - Mask to Helmet Cable Extension . . . 6-95
      - Oxygen Delivery Hose . . . 6-91
      - Strain Relief Cord . . . 6-98
  - Pressure-Demand . . . 5-73
    - AM-7067/A Amplifier . . . 5-76
    - Bayonet Receivers . . . 5-74
    - Cable Assembly, CX-13126A/A . . . 5-78
    - Cable Assembly, CX-13127/A . . . 5-78
    - Cable Assembly, CX-13154/A . . . 5-77
    - Cable Assembly, CX-4434/U . . . 5-77
    - Inhalation/Exhalation Valve . . . 5-81, F5-14
    - M-101/AIC Microphone . . . 5-75
    - Offset Bayonets . . . 5-74
    - Oxygen Delivery Tube . . . 5-82
    - Oxygen Regulator Connector, CRK-90 . . . 5-80
    - Oxygen Regulator Connector, MC-3A . . . 5-80
    - Oxygen Regulator Connector, MS27796 . . . 5-79

S

Sanitizing
- Oxygen Mask Assemblies
  - Enhanced Pressure-Demand
    - MBU-23(V)/P Series . . . 6-51
    - MBU-24/P22P-16 Oxygen Mask Assembly . . . 6-86
  - Non-Personal Issue Masks . . . 6-51A
  - Pressure-Demand . . . 5-66
    - Non-Personal Issue Masks . . . 5-70

Service Life
- Auxiliary Personal Equipment
  - Parachutist Goggles . . . 8-33

ALPHABETICAL INDEX (Cont)

Subject — Paragraph, Figure, Table Number

S (Cont)

Service Life (Cont)
Oxygen Mask Assemblies
Enhanced Pressure-Demand
MBU-23(V)/P Series . . . 6-18
MBU-24/P 22P-16 Oxygen Mask Assembly . . . 6-71
Sizing
Auxiliary Personal Equipment
Parachutist Goggles . . . 8-23
Helmet Assemblies
Cloth . . . 7-17
Communications Ear Plug (CEP) (HGU-84/P and HGU-67/P) . . . 3-47, 3-B
Custom Fit Ear Plugs . . . 7-20
General Use Ear Plugs . . . 7-19
HGU-24/P Helmet Assembly . . . 7-18, 7-F2
HGU-25(V)/P Helmet Assembly . . . 7-18, 7-F2
Rotary Wing . . . 3-24, 3-3
TACAIR . . . 4-30
PRU-52/P Thermoplastic Liner (TPL) . . . 4-51
PRU-55/P Helmet Shell . . . 4-34, 4-3
PRU-58/P Helmet Shell . . . 4-34, 4-3
Oxygen Mask Assemblies
Enhanced Pressure-Demand
MBU-23(V)/P Series . . . 6-24, F6-8
MBU-24/P 22P-16 Oxygen Mask Assembly . . . 6-75
Pressure-Demand . . . 5-34
MBU-12/P Oxygen Mask Subassembly . . . 5-35
Storage
Helmet Assemblies
Rotary Wing
NVIIS Components . . . 3-106
Supplementary Publications . . . 1-19
Support Equipment
Helmet Assemblies
Rotary Wing . . . 3-15
Helmet Sight Alignment Set . . . 3-17
TTU-489/E Oxygen Hose and Communications Test Set . . . 3-16
TACAIR . . . 4-22
Flyer's Helmet Bag . . . 4-25
TTU-489/E Oxygen Hose and Communications Test Set . . . 4-23
TTU-551/E NCE Leakage Tester . . . 4-24, F4-1
Oxygen Mask Assemblies
Enhanced Pressure-Demand
Inhalation/Exhalation Spanner Wrench . . . 6-61, F6-16
Pressure-Demand . . . 5-25
Special Tools . . . 5-27, 5-3
TTU-489/E Test Set . . . 5-26

ALPHABETICAL INDEX (Cont)

Subject	Paragraph, Figure, Table Number
T	
Testing	
Helmet Assemblies	
Rotary Wing	
HSA Boresighting	3-57, F3-11, F3-12, T3-6
NVIIS Alignment Check	3-56
TACAIR	
Helmet Bladder Leakage Test	4-68
Troubleshooting	
Helmet Assemblies	
Rotary Wing	
TACAIR	
Oxygen Mask Assemblies	
Enhanced Pressure-Demand	
MBU-24/P22P-16 Oxygen Mask Assembly	T6-6
Pressure-Demand	T5-12
U	
V	
W	
X	
Y	
Z	