CHAPTER 9

O_2N_2 CONCENTRATOR

TYPE GGU-xx/A, P/N 3261129-0101 AND 3261129-0102

Section 9-1. Description

9-1. GENERAL.

9-2. The O_2N_2 Concentrator, Type GGU-xx/A, P/Ns 3261129-0101 and 3261129-0102, hereinafter referred to as the concentrator or UUT (figure 9-1), is manufactured by Life Support, a business unit of the Component Technologies sector of Northrop Grumman (CAGE 99251). The concentrator is designed to provide a supply of oxygen-enriched air for crewmember breathing and nitrogen-enriched/oxygen-depleted gas for fuel tank inerting. Table 9-1 contains the leading particulars for the concentrator.

9-3. CONFIGURATION.

9-4. The concentrator consists of shutoff valve V1, filter/water separator FLTR1, and pressure reducer REG1, which are all integral parts of the shutoff valve/filter/regulator assembly; slide valve V2; two oxygen molecular sieve beds, BED 1 O_2 and BED 2 O_2; two nitrogen molecular sieve beds, BED 3 N_2 and BED 4 N_2; plenum assembly (ACC1); and a controller/monitor assembly.

9-5. FUNCTION.

9-6. The concentrator uses compressed/conditioned air supplied by a compressor located in the Environmental Control Unit (ECU) and electrical power from the aircraft to provide oxygen-enriched air for crewmember breathing and nitrogen-enriched/oxygen-depleted air for fuel tank inerting. The compressed air enters the concentrator through shutoff valve (1, figure 9-2). The shutoff valve is controlled by solenoid valve (2) in the controller/monitor assembly. With power applied air flows through the shutoff valve to filter/water separator (3) and pressure reducer (4), which are all integral parts of the shutoff valve/filter/regulator assembly; and then passes through slide valve (5). Solenoid valves (6 and 7), located in the controller/monitor assembly, control slide valve cycling. The supply air is then routed to the two oxygen beds (8 and 9), which operate as an alternating pair so that when one bed is pressurized, adsorbing nitrogen, and producing oxygen-enriched product gas, the other bed is venting to ambient and desorbing nitrogen from the prior pressurization period. The regeneration by desorption of nitrogen in the vented bed is enhanced by a reverse flow of oxygen-enriched gas from the output or product end of the pressurized bed. The amount of the reverse or purge flow through the vented bed is controlled by purge orifice restrictors (10 and 11), located in a flow path connecting the output ends of the two beds. The two oxygen beds are cycled alternately between the pressurization or oxygen-producing mode and the vented, regenerative, nitrogen-purging mode by the slide valve. The output oxygen-enriched product gas from the pressurized beds flows through check valves (12 and 13), filters (14 and 15), to pressure-smoothing plenum (16), and on to the crewmember breathing gas delivery lines.

9-7. In a similar manner, nitrogen beds (17 and 18) operate as a separate, independent, alternating pair so that when one nitrogen bed is pressurized, adsorbing oxygen, and producing nitrogen-enriched inert gas, the other is regenerating by venting to ambient and desorbing oxygen from the prior pressurization period. No reverse purge flow for the vented bed is required. The output of the nitrogen-enriched inert product gas from the pressurized nitrogen beds flows through check valves (19 and 20), flow restrictor orifice (21), and through check valve (22) to the fuel tank inert gas delivery lines.

9-8. Pressure transducers (23 and 24), oxygen sensor (25), and nitrogen sensor (26), located in controller/monitor assembly, provide continuous signals to detect off-limit and failure conditions.

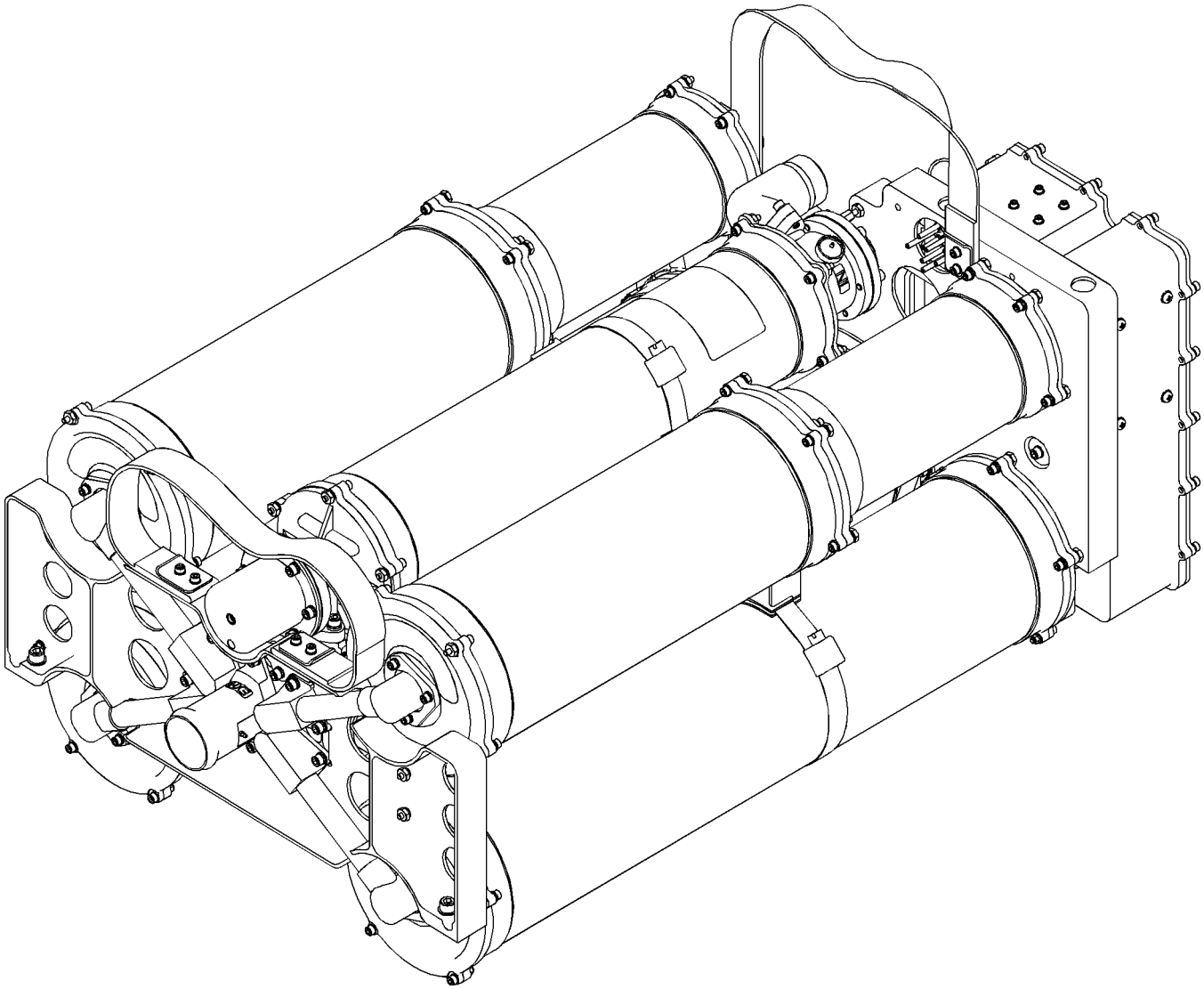

009001

Figure 9-1. O_2N_2 Concentrator, Type GGU-xx/A, P/N 3261129-0101 and 3261129-0102 (shown with controller/monitor attached)

Table 9-1. Leading Particulars

Type GGU-xx/A	P/N 3261129-0101 and 3261129-0102
Overall Dimensions:	
Length	26 inches
Width	16 inches
Height.	11 inches
Weight	57.1 lbs (max)
Electrical Power	28 V dc (30W max, 18W nominal)
Inlet Air Requirements	Pressure range: 21 to 72 psig (clean, dry, oil free air) Air consumption is approximately 50 cfm at 35 psig
Operating Temperature Range	Ambient temperatures of -65° to +125°F Inlet air temperatures of +40° to +120°F
Exposure Temperature Range	Ambient temperatures of -65° to +160°F
Maximum Operating Altitude	27,000 feet
O_2 Warning Activation	182 mmHg PPO_2
Discrete Fail-Safe O_2 Warning	In addition to the fault reporting via the ARINC interface, a separate, fail-safe warning signal provides a warning under power loss conditions
N_2 Warning Activation	Oxygen concentrations above 8%
Performance Monitoring	Continuous monitoring of both oxygen and nitrogen concentrator outputs for proper concentration and pressure
Built-In-Test (BIT)	Incorporates several BIT modes of operation that preclude the need for O-Level support equipment
Mounting	4 captive fasteners used for aircraft mounting

9-9. ACRONYMS.

9-10. Acronyms used herein are as follows:

Acronym	Definition
CAB	Cabin
CV	Check Valve
ECU	Environmental Control Unit
EXH	Exhaust
I-BIT	Initiated Built In Test
M-BIT	Maintenance Built In Test
ORF	Orifice
PPO_2	Partial Pressure of Oxygen
PSA	Pressure Swing Adsorption
SLPM	Standard Liters Per Minute
SN	Serial Number
T/S	Test Set
TS	Test Set

Section 9-2. Modifications

9-11. GENERAL.

9-12. If any concentrator (P/N 3261129-0101) (SN below 11) indicates a failure of the slide valve assembly return concentrator to depot for upgrade to P/N 3261129-0102. This is the only modification to the concentrator required/authorized at this time.

Section 9-3. Performance Test Sheet Preparation

9-13. GENERAL.

9-14. A Performance Test Sheet shall be prepared as shown in Figure 9-3 and shall be used to record test results. The Performance Test Sheet shown is a sample, but may be reproduced for local use.

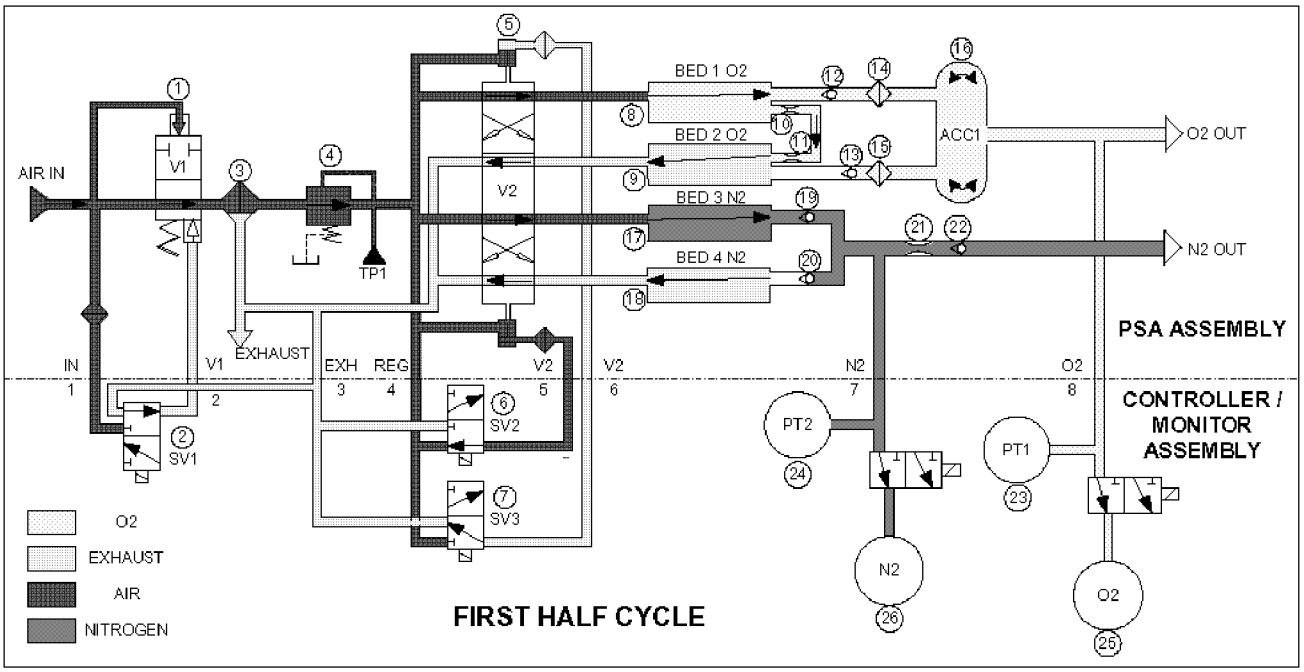

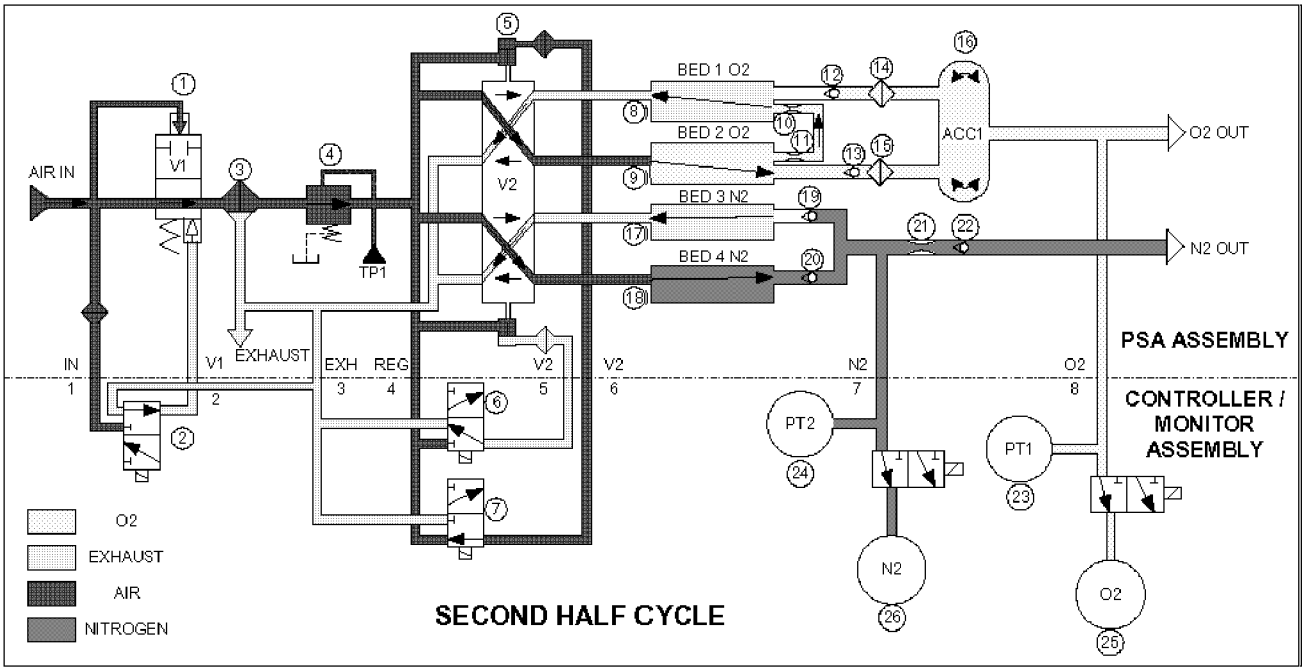

1. SHUTOFF VALVE (V1)
2. SOLENOID VALVE (SV1)
3. FILTER/WATER SEPERATOR (FLTR1)
4. PRESSURE REDUCER (REG1)
5. SLIDE VALVE (SV1)
6. SOLENOID VALVE (SV1)
7. SOLENOID VALVE (SV1)
8. OXYGEN BED (BED 1 O_2)
9. OXYGEN BED (BED 2 O_2)
10. ORIFICE RESTRICTOR (ORF1)
11. ORIFICE RESTRICTOR (ORF2)
12. CHECK VALVE (CV1)
13. CHECK VALVE (CV2)
14. FILTER (FLTR3)
15. FILTER (FLTR4)
16. PRESSURE-SMOOTHING PLENUM (ACC1)
17. NITROGEN BED (BED 3 N_2)
18. NITROGEN BED (BED 4 N_2)
19. CHECK VALVE (CV3)
20. CHECK VALVE (CV4)
21. FLOW RESTRICTOR ORIFICE (ORF3)
22. CHECK VALVE (CV5)
23. PRESSURE TRANSDUCER (PT1)
24. PRESSURE TRANSDUCER (PT2)
25. OXYGEN SENSOR (O_2)
26. OXYGEN SENSOR (N_2)

009002

Figure 9-2. O_2N_2 Concentrator Pneumatic Schematic

O_2N_2 CONCENTRATOR PERFORMANCE TEST SHEET
P/N 3261129-0101 AND 3261129-0102

DATE_____ CONCENTRATOR SERIAL NO._____

TEST SET SERIAL NO._____ TEST SET OPERATOR_____

CDI_____

1. LEAKAGE TEST (MANUAL MODE)

   8. Initial UUT REG PRESS (TP1) Pressure Reading_____

   10. UUT REG PRESS (TP1) Pressure Reading After 5 Minutes_____

   11. Difference_____(8 psi maximum)

   22. Initial UUT REG PRESS (TP1) Pressure Reading_____

   24. UUT REG PRESS (TP1) Pressure Reading After 5 Minutes_____

   25. Difference_____(5 psi maximum)

2. PRESSURE REDUCER TEST (MANUAL MODE)

   5. UUT REG PRESS (TP1) Pressure Reading_____(20 to 30 psig)

   7. UUT REG PRESS (TP1) Pressure Reading_____(16 to 26 psig)

3. OUTLET GAS PRESSURE TEST (MANUAL MODE)

	Ambient Altitude	
	Reading	Tolerance
7. Oxygen Outlet Pressure		greater than 20 psig
8. Oxygen Outlet Oxygen Concentration		25.7% minimum
9. Nitrogen Outlet Oxygen Concentration		7.0% maximum
10. Nitrogen Outlet Flow		65.1 slpm minimum
12. Oxygen Concentration at 30 lpm		83% minimum

4. CONCENTRATOR SHUTDOWN TEST (MANUAL MODE)

   7. S2 OFF, UUT REG PRESS (TP1) less than 2 psig_____(√)

   8. Cycling on UUT REG PRESS (TP1)_____(√)

   9. UUT REG PRESS (TP1) to zero, ARINC Shutdown_____(√)

5. ARINC FUNCTIONAL TEST (MANUAL MODE)

7.	Test Set Indication	ARINC Indication	Difference	Allowed Difference
O_2 Press				± 3.0 psig
O_2 %				± 3.0 %
CAB Press				± 10 mmHg
N_2%				± 1.5 %
PPO_2				± 20 mmHg

   9. Warning light OFF and no ARINC failures_____(√)

   11. I-BIT Complete_____(√)

   13. M-BIT Complete_____(√)

   15. Low O2 output pressure_____(√)

Figure 9-3. Performance Test Sheet

Section 9-4. Maintenance

9-15. GENERAL.

9-16. This section contains the procedural steps for inspection and testing of the concentrator.

9-17. Procedural steps outlined in this section are listed under the inspection cycle in which they are required and in the sequence in which they normally occur.

NOTE

Upon completion of any maintenance action (inspection or testing), be sure to complete the required maintenance data collection systems forms and required entries on Scheduled Removal Component Card OPNAV Form 4790/28.

9-18. INSPECTIONS.

9-19. Concentrators that do not pass inspection and cannot be adjusted in the aircraft shall be removed and replaced with a Ready-For-Installation (RFI) concentrator. The replaced concentrator shall be forwarded to AIMD/MALS for Bench Test and Repair.

9-20. TURNAROUND/PREFLIGHT/POST FLIGHT/TRANSFER INSPECTIONS. The Turnaround/Preflight/Postflight/Transfer Inspections are performed in conjunction with the aircraft inspection requirements for the aircraft in which the concentrator is installed.

9-21. ACCEPTANCE/SPECIAL/DAILY INSPECTIONS. The Acceptance/Special/Daily Inspections shall be performed in conjunction with the aircraft inspection requirements for the aircraft in which the concentrator is installed using applicable aircraft technical publications and maintenance requirement cards.

9-22. CALENDAR/PHASED/SDLM INSPECTIONS. The Calendar/Phased/SDLM Inspections require removal of the concentrator from the aircraft. See applicable Planned Maintenance System (PMS) publications for specified intervals. In no case shall the interval exceed 500 flight hours. Upon removal from the aircraft, the concentrator shall be forwarded to AIMD/MALS for Inspection and Testing.

9-23. VISUAL INSPECTION. To perform a Visual Inspection of the concentrator, proceed as follows:

1. Inspect the concentrator for dents, corrosion, dirt, contamination, and other obvious damage. Correct as necessary.

2. Inspect all welded points for security of attachment and breaks in welding. Correct as necessary.

3. Inspect all external screws, nuts, and fittings for good condition. Correct as necessary.

4. Inspect nameplate for legibility, security of attachment, and good condition. Correct as necessary.

9-24. BENCH TEST.

WARNING

When working with oxygen, make certain that clothing, tubing, fittings, and equipment are free of oil, grease, fuel, hydraulic fluid, or any combustible liquid. Fire or explosion may result when even slight traces of combustible material come in contact with oxygen under pressure.

NOTE

When performing Bench Test in the manual mode, use the Performance Test Sheet (figure 9-3) for recording readings and indications as they apply. During the automated mode tests, data is saved to the hard drive in the test set computer and can be printed. Read the entire step before beginning to familiarize yourself with what needs to be recorded for that step.

Concentrators failing the Bench Test shall be repaired. The aviation life support systems division shall replace all defective component parts and make necessary adjustments to the concentrator.

9-25. Bench Test shall be performed on the concentrator prior to being placed in service and every 500 flight hours when inlet filter element is replaced. The inlet filter element shall be replaced every time the concentrator is serviced prior to any testing or repair. The concentrator shall also be subjected to Bench Test if malfunction is suspected, and after repair or replacement of malfunctioning or damaged parts.

9-26. The Bench Test shall be performed using the O_2N_2 Concentrator Test Set, P/N 3300204-6101 only.

Refer to figure 9-4 for concentrator interfaces and identification of test set controls, indicators, and accessories referred to in the Bench Test.

9-27. Due to the complexity of the test set, it is essential the operator become thoroughly familiar with test set prior to performing the Bench Test. Refer to appropriate ground support equipment manual.

9-28. Unless otherwise specified in the specific test, the pressure applied and valve positioning shall remain unchanged.

NOTE

Paragraph 9-29 covers the test setup of the concentrator using the concentrator controller/monitor. In case of a malfunction of the concentrator, and in order to prevent unnecessary replacement of concentrator controller/monitor, procedures are given in paragraph 9-37 to cover the testing of the concentrator using the test set controller/monitor.

9-29. TEST SET SETUP USING CONCENTRATOR CONTROLLER/MONITOR ONLY.

Materials Required

Quantity	Description	Reference Number
As Required	Air, Pressurized, Clean and Dry Compound	—

Support Equipment Required

Quantity	Description	Reference Number
1	O_2N_2 Concentrator Test Set	3300204-6101 (CAGE 99251)
1	Exhaust Silencer Assembly (Muffler, Exhaust)	901-225-017-101 (CAGE 77272)
1	Surge Suppressor	—

1. Ensure both test set lids are removed.

2. Ensure test set circuit breaker 115 VAC ON/OFF (CB1), switch PNEUMATIC POWER ON/OFF (S1) and switch UUT POWER ON/OFF/TS MONITOR POWER ON (S2) are in OFF position.

3. Remove all hoses, cables, and adapters from lid of the test set. Remove muffler and computer from test set front panel.

4. Remove protective caps, dust cap, and shipping plugs from the concentrator.

WARNING

Hazardous voltages may be present on case of test set if power plug and source are not connected to safety ground.

NOTE

Refer to figure 9-4 for concentrator interfaces and identification of test set controls, indicators, and accessories.

Unless otherwise noted, refer to figure 9-5 for test setup.

5. Connect the one end of test set power cable (P/N 3309146-1) to test set 115 VAC (J1) and other end to the surge suppressor.

6. Connect the one end of test set computer (P/N 3309268-1) power supply to the computer (P/N 3309268-1) and other end to the surge suppressor and connect the surge suppressor to a 115 V, 60 Hz power source.

7. Connect one end of test set cable assembly (P/N 3309386-1) to the test set computer (P/N 3309268-1) and the other end to test set TO COMPUTER (J3).

8. Connect test set cable assembly (P/N 3309142-1) to test set TO UUT MONITOR (J2). Connect other end of test set cable assembly (P/N 3309142-1) to (J1 and J2) on concentrator controller/monitor.

9. Connect connector assembly (P/N 3308193-1) to concentrator N_2 outlet port. Connect the hose assembly (P/N 3309243-1) from connector assembly (P/N 3308193-1) on the N_2 outlet port to the test set plenum (J13).

10. Connect the hose assembly (P/N 3309243-1) from the test set plenum (J15) to the test set panel N_2 FROM PLENUM port (J8).

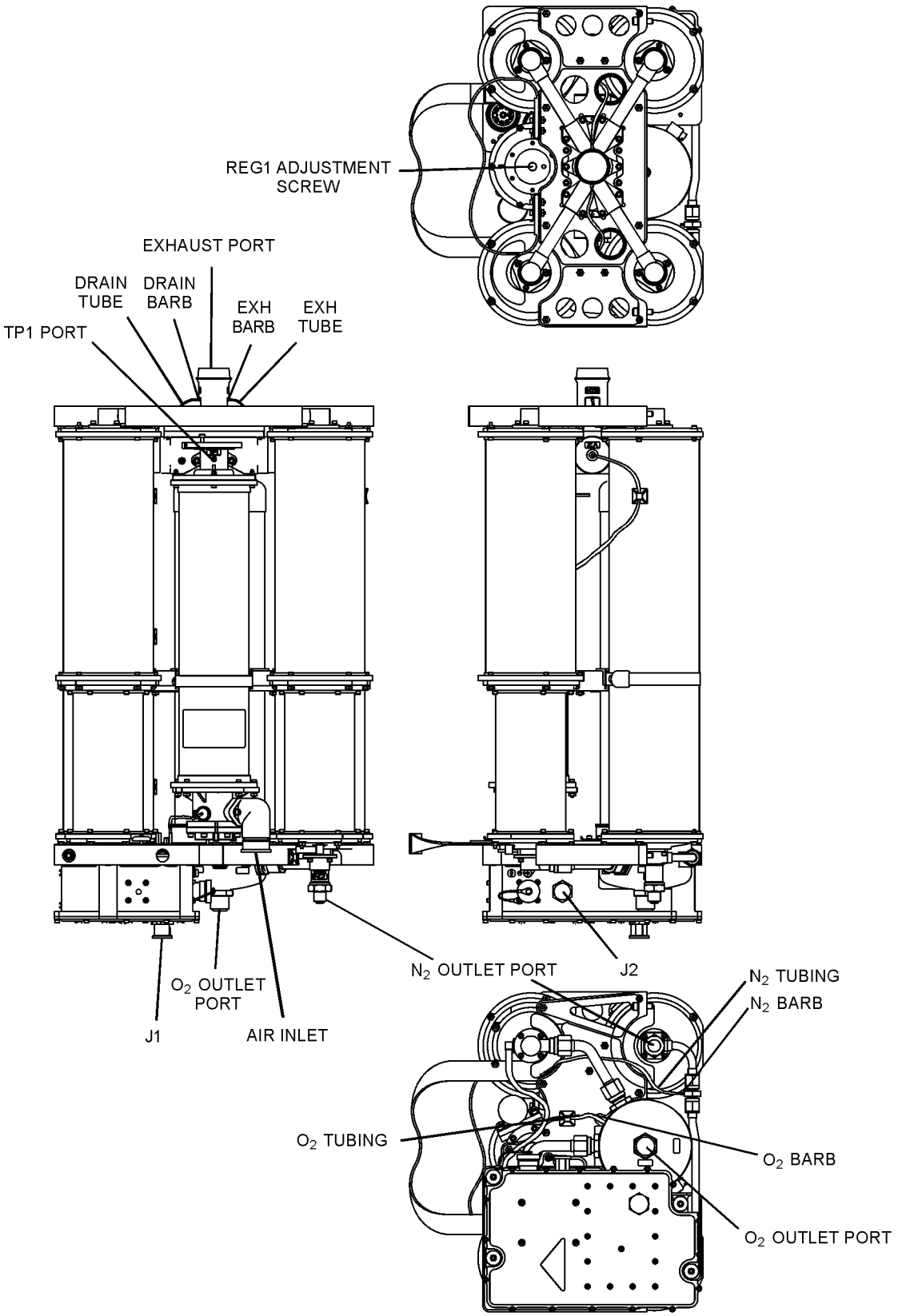

00900401

Figure 9-4. Interfaces (O_2N_2 Concentrator) (Sheet 1 of 4)

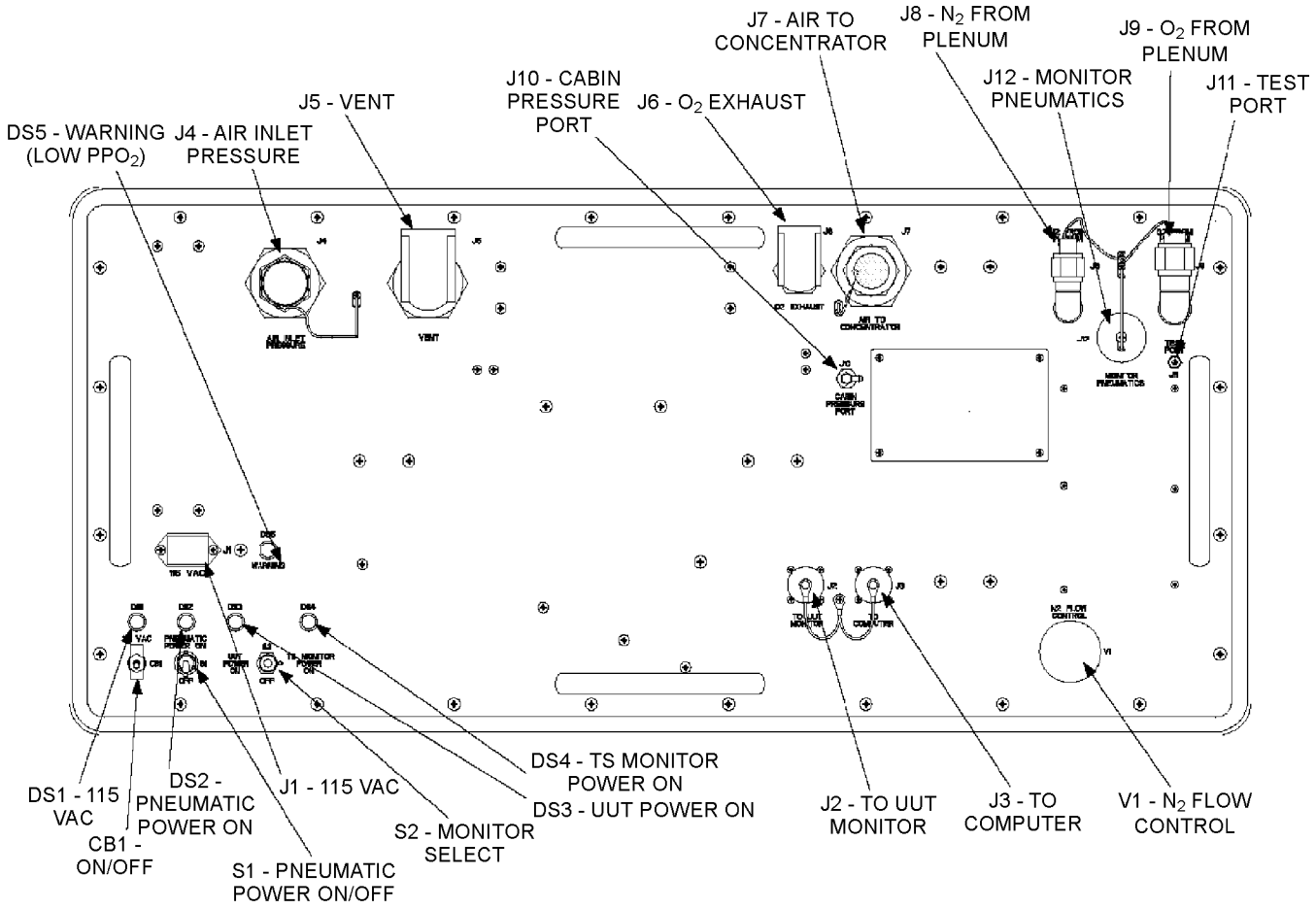

00900402

Figure 9-4. Interfaces (Front Panel of Test Set Box 1 of 2) (Sheet 2 of 4)

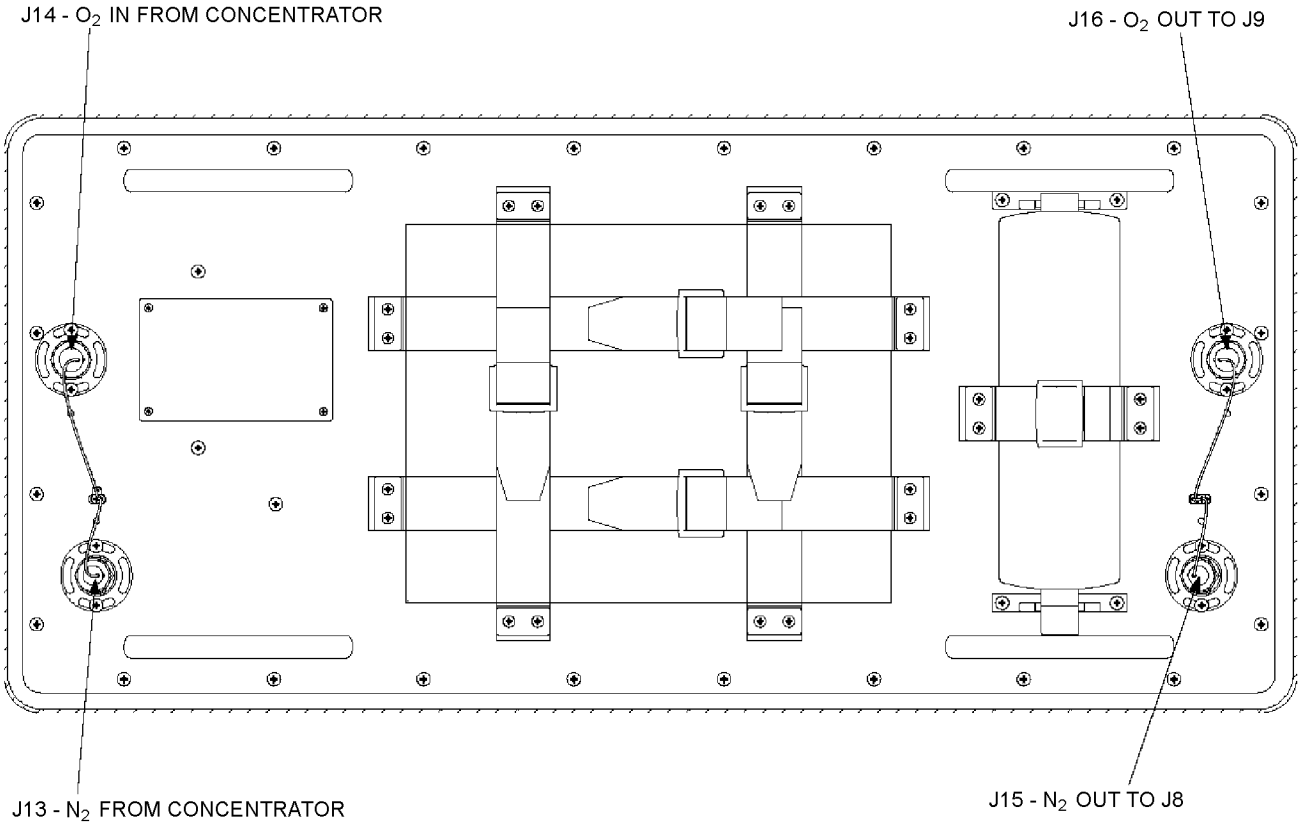

00900403

Figure 9-4. Interfaces (Front Panel of Test Set Box 2 of 2) (Sheet 3 of 4)

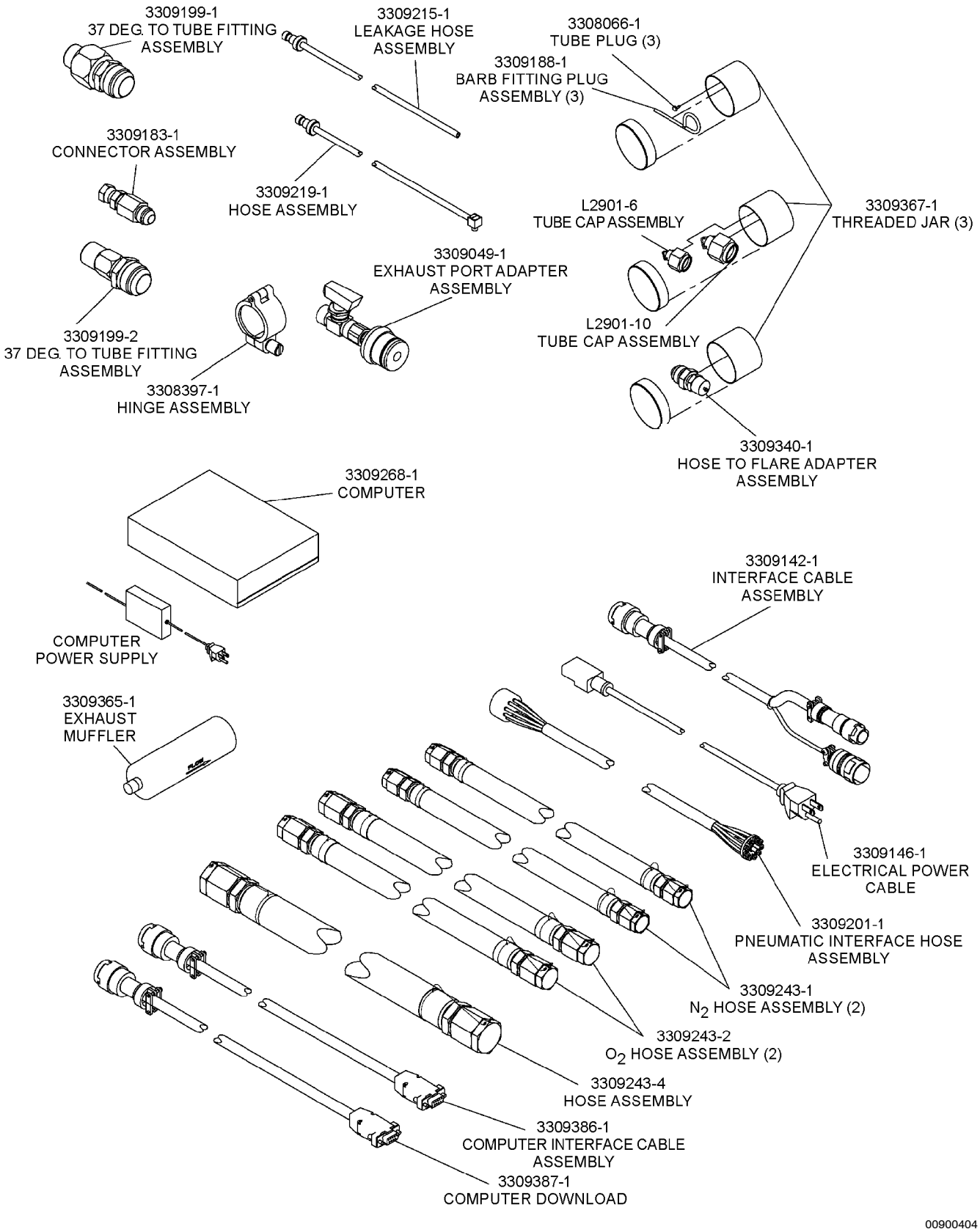

Figure 9-4. Interfaces (Test Set Accessories) (Sheet 4 of 4)

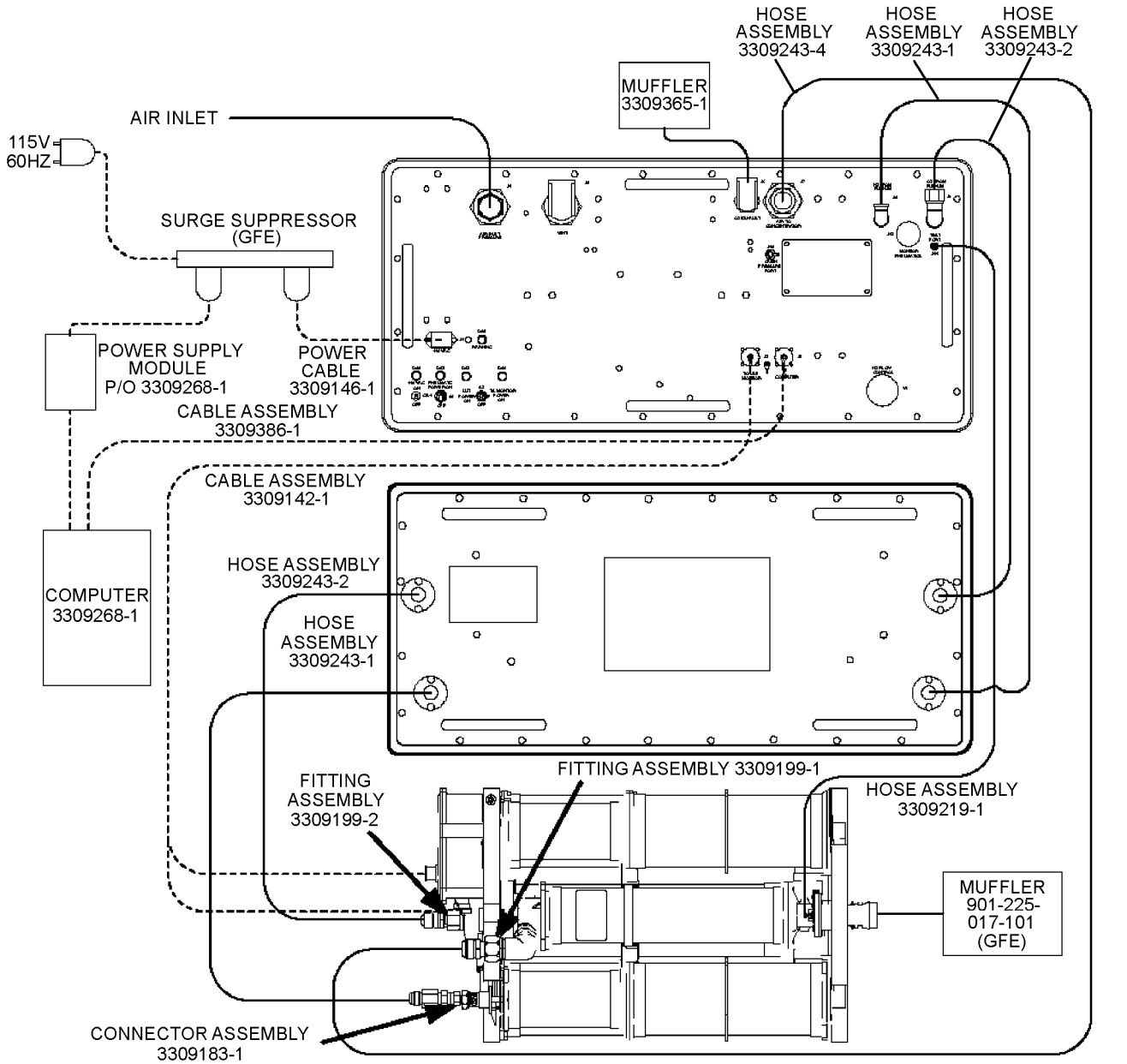

009005

Figure 9-5. O_2N_2 Concentrator Performance Test Setup Using Concentrator Controller/Monitor Only (Normal)

11. Connect fitting assembly (P/N 3309199-2) to the O_2 outlet port. Connect the hose assembly (P/N 3309243-2) from fitting assembly (P/N 3309199-2) connected to the O_2 outlet port on the concentrator to the test set plenum (J14).

12. Connect the hose assembly (P/N 3309243-2) from the test set plenum (J16) to the test set panel O_2 FROM PLENUM port (J9).

13. Connect fitting assembly (P/N 3309199-1) to air inlet port. Connect the hose assembly (P/N 3309243-4) from the test set front panel AIR TO CONCENTRATOR port (J7) to fitting assembly (P/N 3309199-1) connected to air inlet port on the concentrator.

14. Connect the air source to the test set AIR INLET PRESSURE port (J4). Turn on the compressor.

15. Remove the test port plug from the concentrator pressure reducer at TP1 port and connect the test set hose assembly (P/N 3309219-1) between the concentrator TP1 port and test set TEST PORT (J11).

16. Connect the muffler (P/N 3309365-1) to the test set O_2 EXHAUST port (J6).

17. Connect the GFE supplied muffler (P/N 901-225-017-101) to the exhaust on the concentrator.

18. Place the computer (P/N 3309268-1) switch to the ON position.

19. Place the test set 115 VAC ON/OFF circuit breaker (CB1) to ON.

20. When Windows starts, select the V22 TS icon to start the program.

NOTE

Refer to Figure 9-6 for reference O_2N_2 concentrator test set display.

The test set requires a 15-minute warmup period (after 115 VAC ON/OFF (CB1) is turned on) to achieve the specified accuracy. Wait for the T/S Ready light to turn green prior to performing any concentrator acceptance testing.

21. Wait until the TEST SET Warmup counts down to zero, and the T/S Ready light is green.

22. The default screen will appear. Enter the concentrator Serial Number.

23. Refer to the appropriate test for further instructions.

CAUTION

To extend the life of the electronic regulators used in this test set, switch PNEUMATIC POWER ON/OFF (S1) should be in OFF position when concentrator testing or troubleshooting is not in progress.

24. When concentrator testing or troubleshooting is not in progress, turn switch PNEUMATIC POWER ON/OFF (S1) to the OFF position.

25. The data files for each test are stored automatically on the computer hard drive in the folder C:\V22_TS\SN\Individual_Test or C:\V22_TS\SN\Acceptance_Test. The file name is then SN.TEST Letter Run#. The file name is the concentrator serial number followed by a file extension that identifies the specific test and the number of times that this has been performed (SN.TEST Letter Run#).

26. For example: C:\V22-TS\001\Individual_Test\001.a03 would indicate the third time the leakage test has been performed on serial number 001.

27. After all concentrator testing is complete, use the Windows file manager to copy all files associated with that particular serial number to a 3-1/2-inch floppy disk. This disk, along with the completed data sheet, will form a permanent record for each concentrator.

NOTE

Paragraph 9-37 covers the testing of the concentrator using the test set controller/monitor in lieu of the concentrator controller/monitor. Using the test set controller/monitor may be used to assist with troubleshooting and in order to prevent unnecessary replacement of concentrator controller/monitor.

After concentrator has been repaired and all maintenance actions have been completed the following automated performance test shall be performed.

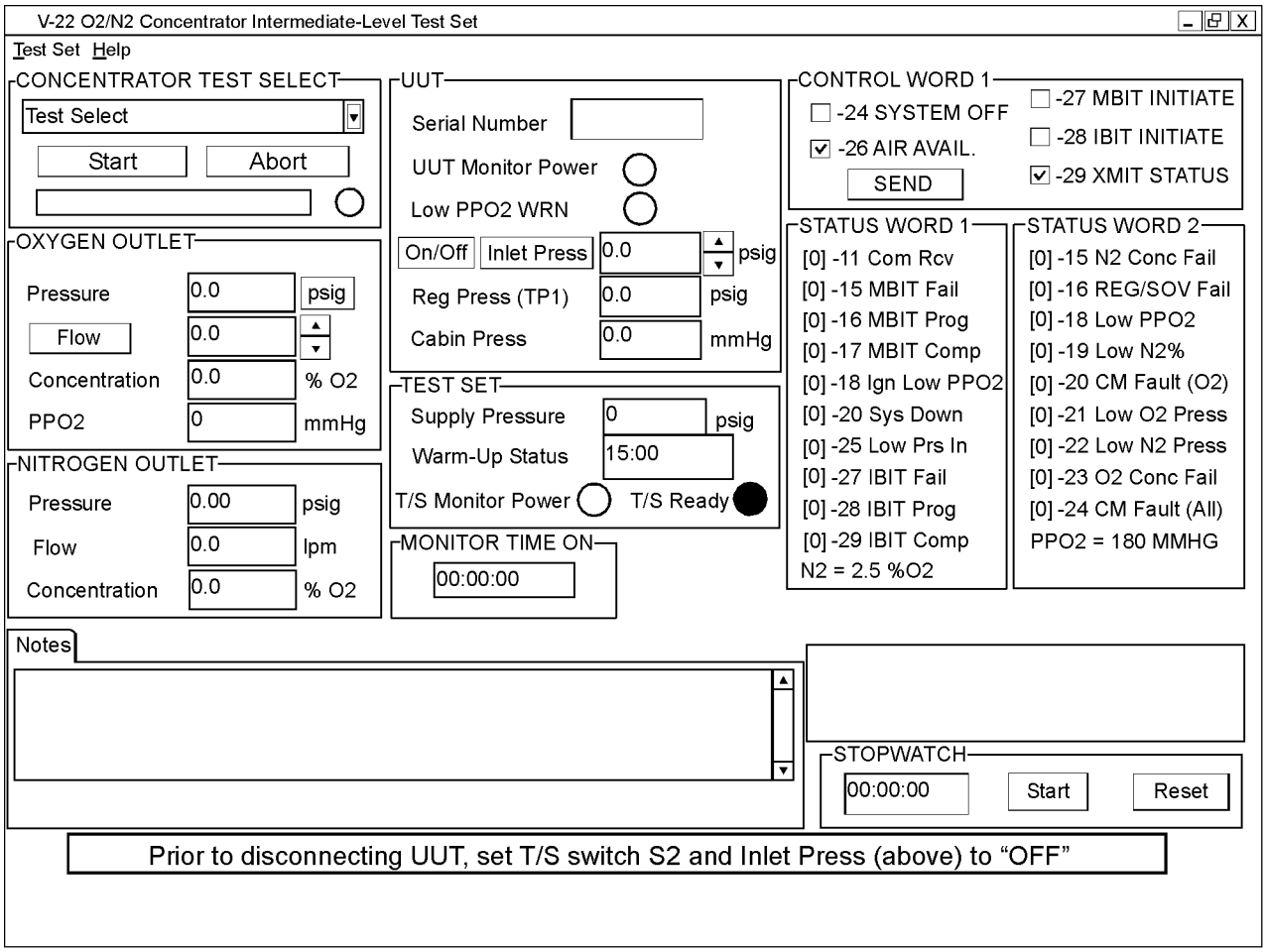

009006

Figure 9-6. O_2N_2 Concentrator Test Set Display

9-30. AUTOMATED PERFORMANCE TEST USING CONCENTRATOR CONTROLLER/MONITOR ONLY. To perform the automated performance test (****Run All Tests****), proceed as follows:

NOTE

****Run All Tests**** test runs the leakage, pressure reducer, outlet gas performance, concentrator shutdown, and ARINC functional test in sequence. Data from the tests is saved to C:\V22_TS\SN\Acceptance_Test. For a description of each test refer to the appropriate section below.

1. Ensure the setup has been completed, refer to Test Set Setup Using Concentrator Controller/Monitor (paragraph 9-29).

2. Click CONCENTRATOR TEST SELECT menu.

3. Using the mouse, click **** Run All Tests **** and click START. This will activate the test set to perform the testing sequence. During this test, manual instructions will appear on the monitor screen. Follow these instructions as they appear. At the completion of this test, the monitor screen will indicate passed or failed. If a failed indication is displayed, click appropriate tab (example: (A) Leakage Test) to the right of the Notes tab. The Notes text will display information as to the failure(s) that occurred. If failure occurs, refer to appropriate troubleshooting table.

4. Following the completion of testing, replace all shipping caps and dust covers on the concentrator and test set.

9-31. AUTOMATED INDIVIDUAL TESTS USING CONCENTRATOR CONTROLLER/MONITOR ONLY. Each test may be run individually in the automated mode. To perform an individual automated test, proceed as follows:

1. Ensure the setup has been completed, refer to Test Set Setup Using Concentrator Controller/Monitor (paragraph 9-29).

2. Click CONCENTRATOR TEST SELECT menu.

3. Using the mouse, click the appropriate individual test (example: (A) Leakage Test) and click START. This will activate the test set to perform the testing sequence. During this test, manual instructions will appear on the monitor screen. Follow these instructions as they appear. At the completion of this test, the monitor screen will indicate passed or failed. If a failed indication is displayed, click appropriate tab (example: (A) Leakage Test) to the right of the Notes tab. The Notes text will display information as to the failure(s) that occurred. Refer to figures 9-4 and 9-7 during testing for correct leakage test setup. If failure occurs, refer to appropriate troubleshooting table.

NOTE

Paragraphs 9-32 through 9-36 contain the procedural steps for testing of the concentrator manually for each individual test. The following tests are identical to the automated tests described above but will allow operator interaction.

9-32. LEAKAGE TEST USING CONCENTRATOR CONTROLLER/MONITOR ONLY. To perform the leakage test in the manual mode, proceed as follows:

NOTE

Refer to figures 9-4 and 9-7 during testing for correct leakage test setup.

1. Ensure the test setup has been completed, refer to Test Set Setup Using Concentrator Controller/Monitor (paragraph 9-29).

2. Remove the GFE supplied muffler (P/N 901-225-017-101) from the concentrator and plug the concentrator exhaust port using the adapter assembly (P/N 3309049-1) and the hinge assembly (P/N 3308397-1). Place the valve on adapter assembly (P/N 3309049-1) to the CLOSED position.

3. Disconnect the concentrator O_2 tubing from the O_2 barb at the concentrator plenum and disconnect the concentrator N_2 tubing from the N_2 barb. Plug the N_2 and O_2 tubing with the plugs (P/N 3308066-1) and plug the O_2 and N_2 barbs with plug assembly (P/N 3309188-1).

4. Disconnect hose assembly (P/N 3309243-1) with connector assembly (P/N 3309183-1) attached from concentrator N_2 Outlet port. Disconnect hose assembly (P/N 3309243-2) from fitting assembly (P/N 3309199-2). Cap the N_2 Outlet port on the concentrator with the cap (P/N L2901-6) and cap the O_2 Outlet port on the concentrator with the fitting assembly (P/N 3309199-2) and cap (P/N L2901-10).

5. Remove the concentrator EXH tubing from the concentrator EXH barb and plug the concentrator EXH tube barb with the plug assembly (P/N 3309188-1).

6. Place switch PNEUMATIC POWER ON/OFF (S1) and switch UUT POWER ON/OFF/TS MONITOR POWER ON (S2) to the ON position and click UUT On/Off to on.

NOTE

Adjust the UUT Inlet Press by pressing the Inlet Press button, place mouse cursor in box, click left mouse button, enter desired pressure, and press UUT Set Press button or by pressing the ↑ or ↓ arrows to obtain a pressure.

7. Adjust the UUT Inlet Press to obtain a pressure of 35 ±1 psig. Click Reset button of the STOPWATCH and pressurize the concentrator for 3 minutes. After 3 minutes, plug the tubing labeled EXH with a tube plug (P/N 3308066-1).

8. Record initial UUT Reg Press (TP1) pressure reading on Performance Test Sheet.

9. Click UUT On/Off to off and click Reset button of the STOPWATCH.

10. After 5 minutes, record UUT Reg Press (TP1) pressure reading on Performance Test Sheet.

11. Record difference between steps 8 and 10 on Performance Test Sheet. The difference between the two readings shall not exceed 8 psi.

12. Slowly move the valve on the adapter assembly to the OPEN position.

13. Remove the test set plugs (P/N 3308066-1) and plug assemblies (P/N 3309188-1) from the concentrator O_2 and N_2 barbs and tubing.

14. Remove the test set plug (P/N 3308066-1) and plug assembly (P/N 3309188-1) from the EXH port and tubing. Reconnect the EXH tubing to the EXH barb on the concentrator exhaust tube.

15. Remove the hinge assembly (P/N 3308397-1) and the adapter assembly (P/N 3309049-1). Reconnect the GFE supplied muffler (901-225-017-101) to the concentrator exhaust port.

16. Remove the caps (P/N L2901-10 and P/N L2901-6) and from the concentrator O_2 and N_2 outlet ports. Reconnect the tubing to the O_2 and N_2 barbs.

17. Reconnect connector assembly (P/N 3309183-1) with hose (P/N 3309243-1) attached to concentrator N_2 outlet port. Disconnect end of hose assembly (P/N 3309243-1) connected to plenum port (J13) and connect adapter assembly (P/N 3309340-1) to test set hose assembly.

18. Connect leakage hose assembly (P/N 3309215-1) to adapter assembly. Disconnect hose from test set TEST PORT (J11) and connect leakage hose assembly to test set TEST PORT (J11).

19. Adjust the UUT Inlet Press to obtain a pressure of 27 ±1 psig.

20. From the Test Set menu, set J11 Test Pressure On. Click Start button of the STOPWATCH.

21. After two minutes, set J11 Test Pressure off. Set UUT Inlet Press to 0.0 psig.

22. Record initial UUT Reg Press (TP1) pressure reading on Performance Test Sheet.

23. Click Reset button of the STOPWATCH.

24. After 5 minutes, record UUT Reg Press (TP1) pressure reading on Performance Test Sheet.

25. Record difference between steps 22 and 24 on Performance Test Sheet. The difference between the two readings shall be less than 5 psi.

26. Disconnect leakage hose assembly from test set TEST PORT (J11) and adapter assembly. Reconnect hose from concentrator TP1 to test set TEST PORT (J11). Remove adapter assembly.

27. Reconnect the test set hoses between plenum assembly and concentrator O_2 and N_2 outlet ports.

28. If malfunction occurs, refer to troubleshooting (table 9-2).

29. If readings are within tolerance, place switch PNEUMATIC POWER ON/OFF (S1) to the OFF position. Wait until no audible flow from the concentrator is evident, and then place switch UUT POWER ON/OFF/TS MONITOR POWER ON (S2) to the OFF position. Disconnect the concentrator from the test set.

9-33. PRESSURE REDUCER TEST USING CONCENTRATOR CONTROLLER/MONITOR ONLY. To perform the pressure reducer test in the manual mode, proceed as follows:

NOTE

Refer to figures 9-4 and 9-5 during testing for correct test setup.

1. Ensure the setup has been completed, refer to Test Set Setup Using Concentrator Controller/Monitor (paragraph 9-29).

2. Place switch PNEUMATIC POWER ON/OFF (S1) and switch UUT POWER ON/OFF/TS MONITOR POWER ON (S2) to the ON position and click UUT On/Off to on.

NOTE

Adjust the OXYGEN OUTLET Flow by pressing the OXYGEN OUTLET Flow button, place mouse cursor in box, click left mouse button, enter desired flow, and press OXYGEN OUTLET Set Flow button or by pressing the ↑ or ↓ arrows to obtain a flow.

3. Set the OXYGEN OUTLET Flow to obtain 230 ±2 lpm.

4. If necessary, adjust test set panel N_2 FLOW CONTROL valve (V1) until the NITROGEN OUTLET Pressure is 2.0 ±0.25 psig.

5. Record UUT Reg Press (TP1) pressure reading on Performance Test Sheet. The pressure swing shall be 20 to 30 psig.

NOTE

Adjust the UUT Inlet Press by pressing the Inlet Press button, place mouse cursor in box, click left mouse button, enter desired pressure, and press UUT Set Press button or by pressing the ↑ or ↓ arrows to obtain a pressure.

6. Adjust the UUT Inlet Press to obtain a pressure of 25 +0,-1 psig.

7. Record UUT Reg Press (TP1) pressure reading on Performance Test Sheet. The pressure swing shall be 16 to 26 psig.

8. Adjust the UUT Inlet Press pressure to obtain a pressure of 35 ±1 psig. Adjust the OXYGEN OUTLET Flow to obtain 30 ±1 lpm.

9. If malfunction occurs, refer to troubleshooting (table 9-3).

10. If readings are within tolerance, place switch PNEUMATIC POWER ON/OFF (S1) to the OFF position. Wait until no audible flow from the concentrator is evident, and then place switch UUT POWER ON/OFF/TS MONITOR POWER ON (S2) to the OFF position. Disconnect the concentrator from the test set.

9-34. OUTLET GAS PERFORMANCE TEST USING CONCENTRATOR CONTROLLER/MONITOR

ONLY. To perform outlet gas performance test in the manual mode, proceed as follows:

NOTE

Refer to figures 9-4 and 9-5 during testing for correct test setup.

1. Ensure the setup has been completed, refer to Test Set Setup Using Concentrator Controller/Monitor (paragraph 9-29).

2. Place switch PNEUMATIC POWER ON/OFF (S1) and switch UUT POWER ON/OFF/TS MONITOR POWER ON (S2) to the ON position and click UUT On/Off to on.

NOTE

Adjust the UUT Inlet Press by pressing the Inlet Press button, place mouse cursor in box, click left mouse button, enter desired pressure, and press UUT Set Press button or by pressing the ↑ or ↓ arrows to obtain a pressure.

3. Adjust the UUT Inlet Press to obtain a pressure of 35.0 ±1 psig.

NOTE

Adjust the OXYGEN OUTLET Flow by pressing the OXYGEN OUTLET Flow button, place mouse cursor in box, click left mouse button, enter desired flow, and press OXYGEN OUTLET Set Flow button or by pressing the ↑ or ↓ arrows to obtain a flow.

4. Adjust the OXYGEN OUTLET Flow to obtain a flow of 230 ±2 lpm.

5. If necessary, adjust the test set panel N_2 FLOW CONTROL valve (V1) until the NITROGEN OUTLET Pressure is 2.0 ±0.25 psig.

6. Click Reset button of the STOPWATCH and allow concentrator to operate at least 5 minutes or until outlet pressures and oxygen concentrations stabilize. Listen for pressure cycling.

7. If necessary, set the OXYGEN OUTLET Pressure to read in psig. Record the average OXYGEN OUTLET Pressure on Performance Test Sheet. The average shall be greater than 20 psig.

8. Record the OXYGEN OUTLET Concentration percentages on Performance Test Sheet. The OXYGEN OUTLET Concentration shall be 25.7% minimum.

9. Record the NITROGEN OUTLET Concentration percentages on Performance Test Sheet. The NITROGEN OUTLET Concentration shall be 7.0% maximum.

10. Record NITROGEN OUTLET Flow on Performance Test Sheet. The average flow shall be 65.1 slpm minimum (0.166 lb/min minimum).

11. Set the OXYGEN OUTLET Flow to obtain a flow of 30 ±1 lpm.

12. Click Reset button of the STOPWATCH and allow concentrator to operate at least 10 minutes or until the oxygen concentrations stabilize. Record OXYGEN OUTLET Concentration percentage on Performance Test Sheet. The OXYGEN OUTLET Concentration shall be 83% minimum.

13. If malfunction occurs, refer to troubleshooting (table 9-4).

14. If readings are within tolerance, place switch PNEUMATIC POWER ON/OFF (S1) to the OFF position. Wait until no audible flow from the concentrator is evident, and then place switch UUT POWER ON/OFF/TS MONITOR POWER ON (S2) to the OFF position. Disconnect the concentrator from the test set.

9-35. CONCENTRATOR SHUTDOWN TEST USING CONCENTRATOR CONTROLLER/MONITOR ONLY. To perform the concentrator shutdown test in the manual mode, proceed as follows:

NOTE

Refer to figures 9-4 and 9-5 during testing for correct test setup.

1. Ensure the setup has been completed, refer to Test Set Setup Using Concentrator Controller/Monitor (paragraph 9-29).

2. Place switch PNEUMATIC POWER ON/OFF (S1) and switch UUT POWER ON/OFF/TS MONITOR POWER ON (S2) to the ON position and click UUT On/Off to on.

NOTE

Adjust the UUT Inlet Press by pressing the Inlet Press button, place mouse cursor in box, click left mouse button, enter desired pressure, and press UUT Set Press button or by pressing the ↑ or ↓ arrows to obtain a pressure.

3. Adjust the UUT Inlet Press to obtain a pressure of 35.0 ±1 psig.

NOTE

Adjust the OXYGEN OUTLET Flow by pressing the OXYGEN OUTLET Flow button, place mouse cursor in box, click left mouse button, enter desired flow, and press OXYGEN OUTLET Set Flow button or by pressing the ↑ or ↓ arrows to obtain a flow.

4. Set the OXYGEN OUTLET Flow to a flow of 230 ±2 lpm.

5. If necessary, adjust test set panel N_2 FLOW CONTROL valve (V1) until the NITROGEN OUTLET Pressure is 2.0 ±0.25 psig.

6. Click Reset button of the STOPWATCH and allow concentrator to operate at least 1 minute.

7. Simultaneously place switch UUT POWER ON/OFF/TS MONITOR POWER ON (S2) to the OFF position and click Reset button of the STOPWATCH. If UUT Reg Press (TP1) goes to less than 2 psig within 90 seconds, place a check mark in appropriate space on Performance Test Sheet.

8. Place switch UUT POWER ON/OFF/TS MONITOR POWER ON (S2) to the ON position. If pressure cycling resumes as indicated by the UUT Reg Press (TP1), place a check mark in appropriate space on Performance Test Sheet. Allow the concentrator to operate for at least 3 1/2 minutes.

9. In the CONTROL WORD 1 box; click -24 SYSTEM OFF until a √ is indicated in its box. Click SEND button and immediately click Reset button of the STOPWATCH. If UUT Reg Press (TP1) goes to less than 2 psig within 90 seconds and ARINC status word 1-20 (O_2N_2 System Shutdown) is set to 1, place a check mark in appropriate space on Performance Test Sheet.

10. In the CONTROL WORD 1 box; click -24 SYSTEM OFF until the √ is removed from the box and click SEND button.

11. Place switch PNEUMATIC POWER ON/OFF (S1) to the OFF position and allow the concentrator to operate until the UUT REG PRESS goes to approximately zero.

12. If malfunction occurs, refer to troubleshooting (table 9-5).

13. If readings are within tolerance, wait until no audible flow from the concentrator is evident, and then place switch UUT POWER ON/OFF/TS MONITOR POWER ON (S2) to the OFF position. Disconnect the concentrator from the test set.

9-36. ARINC FUNCTIONAL TEST USING CONCENTRATOR CONTROLLER/MONITOR ONLY. To perform the ARINC functional test in the manual mode, proceed as follows:

NOTE

Refer to figures 9-4 and 9-5 during testing for correct test setup.

1. Ensure the setup has been completed, refer to Test Set Setup Using Concentrator Controller/Monitor (paragraph 9-29).

2. Place switch PNEUMATIC POWER ON/OFF (S1) and switch UUT POWER ON/OFF/TS MONITOR POWER ON (S2) to the ON position and click UUT On/Off to On.

NOTE

Adjust the UUT Inlet Press by pressing the Inlet Press button, place mouse cursor in box, click left mouse button, enter desired pressure, and press UUT Set Press button or by pressing the ↑ or ↓ arrows to obtain a pressure.

3. Adjust the UUT Inlet Press to obtain a pressure of 35.0 ±1 psig.

NOTE

Adjust the OXYGEN OUTLET Flow by pressing the OXYGEN OUTLET Flow button, place mouse cursor in box, click left mouse button, enter desired flow, and press OXYGEN OUTLET Set Flow button or by pressing the ↑ or ↓ arrows to obtain a flow.

4. Set the OXYGEN OUTLET Flow to a flow of 230 ±2 lpm.

5. If necessary, adjust test set panel N_2 FLOW CONTROL valve (V1) until the NITROGEN OUTLET Pressure is 2.0 ±0.25 psig.

6. From the Test Set Menu, set Test Mode Monitor (ARINC) on. Set OXYGEN OUTLET Pressure to read in psia.

7. Allow the concentrator to operate for a minimum of 15 minutes. Compare the following test set readings with the concentrator ARINC output readings and record on Performance Test Sheet. The concentrator readings shall be within the tolerances shown.

O_2 PRESS	± 3.0 psia
O_2 %	± 3.0%
CAB	± 10mmHg
N_2 %	± 1.5%
PPO_2	± 20mmHg

8. Place switch UUT POWER ON/OFF/TS MONITOR POWER ON (S2) to the OFF position and allow the UUT REG Press (TP1) to bleed to approximately zero.

9. Place switch UUT POWER ON/OFF/TS MONITOR POWER ON (S2) to the ON position. If WARNING light (DS5) extinguishes within 3 minutes and no ARINC failures are indicated after 3 1/2 minutes (Status words 2-15, 2-16, 2-18, 2-19, 2-20, 2-21, 2-22, 2-23, and 2-24 are all 0), place a check mark in appropriate space on Performance Test Sheet.

10. Click -28 IBIT INITIATE in the CONTROL WORD 1 box located in the upper right corner of the screen until a √ is indicated in its box and then click SEND button. Verify that STATUS WORD 1 [1] -28 IBIT Prog is displayed.

11. After approximately 30-40 seconds, if [1] -29 IBIT Comp, [0] -28 IBIT Prog, and [0] -27 IBIT Fail is displayed in the STATUS WORD 1 box. (IBIT Complete.), place a check mark in appropriate space on Performance Test Sheet.

12. Click -27 MBIT INITIATE in the CONTROL WORD 1 box located in the upper right corner of the screen until a √ is indicated in its box and then click SEND button. Verify that STATUS WORD 1 [1] -16 MBIT Prog is displayed after a few seconds.

13. After approximately 5 1/2 minutes, if [1] -17 MBIT Comp, [0] -16 MBIT Prog, and [0] -15 MBIT Fail is displayed in the STATUS WORD 1 box. (MBIT Complete.), place a check mark in appropriate space on Performance Test Sheet.

14. Set the OXYGEN OUTLET Flow to a flow of 75.0 ±5 lpm. If necessary, set the OXYGEN OUTLET PRESSURE to read in psia.

15. Set UUT INLET Press to 11 psig. Slowly adjust the UUT INLET Press by pressing the ↓ arrow until the STATUS WORD 2 box displays [1] - 21 Low O_2 Press. Record OXYGEN OUTLET Pressure on Performance Test Sheet. The pressure shall be between 19 and 23 psia.

16. Set the OXYGEN OUTLET Pressure to read in psig.

17. If malfunction occurs, refer to troubleshooting (table 9-6).

18. If readings are within tolerance, place switch PNEUMATIC POWER ON/OFF (S1) to the OFF position. Wait until no audible flow from the concentrator is evident, and then place switch UUT POWER ON/OFF/TS MONITOR POWER ON (S2) to the OFF position. Disconnect concentrator from the test set.

9-37. TEST SET SETUP USING TEST SET CONTROLLER/MONITOR ONLY.

Materials Required

Quantity	Description	Reference Number
As Required	Air, Pressurized, Clean and Dry Compound	—

Support Equipment Required

Quantity	Description	Reference Number
1	O_2N_2 Concentrator Test Set	3300204-6101 (CAGE 99251)
1	Silencer Assembly, Exhaust (Muffler, Exhaust)	901-225-017-101 (CAGE 77272)
1	Surge Suppressor	—

1. Ensure both test set lids are removed.

2. Ensure test set circuit breaker 115 VAC ON/OFF (CB1), switch PNEUMATIC POWER ON/OFF (S1) and switch UUT POWER ON/OFF/TS MONITOR POWER ON (S2) are in OFF position.

3. Remove all hoses, cables, and adapters from lid of the test set. Remove muffler and computer from test set front panel.

4. Remove protective caps, dust cap, and shipping plugs from the concentrator.

WARNING

Hazardous voltages may be present on case of test set if power plug and source are not connected to safety ground.

NOTE

Refer to figure 9-4 for O_2N_2 concentrator interfaces.

Unless otherwise specified, refer to figure 9-8.

5. Connect the one end of test set power cable (P/N 3309146-1) to test set 115 VAC (J1) and other end to the surge suppressor.

6. Connect the one end of test set computer (P/N 3309268-1) power supply to the computer and other end to the surge suppressor and connect the surge suppressor to a 115 V, 60 Hz power source.

7. Connect one end of test set cable assembly (P/N 3309386-1) to the portable computer and the other end to test set TO COMPUTER (J3).

8. Connect hose assembly (P/N 3309201-1) to test set MONITOR PNEUMATICS (J12). Connect other end of hose assembly (P/N 3309201-1) to PSA pneumatic connector on concentrator.

9. Connect connector assembly (P/N 3308193-1) to concentrator N_2 outlet port. Connect the hose assembly (P/N 3309243-1) from connector assembly (P/N 3308193-1) on the N_2 outlet port to the test set plenum (J13).

10. Connect the hose assembly (P/N 3309243-1) from the test set plenum port (J15) to the test set panel N_2 FROM PLENUM port (J8).

11. Connect fitting assembly (P/N 3309199-2) to the O_2 outlet port. Connect the hose assembly (P/N 3309243-2) from fitting assembly (P/N 3309199-2) connected to the O_2 outlet port on the concentrator to the test set plenum (J14).

12. Connect the hose assembly (P/N 3309243-2) from the test set plenum (J16) to the test set panel O_2 FROM PLENUM port (J9).

13. Connect fitting assembly (P/N 3309199-1) to air inlet port. Connect the hose assembly (P/N 3309243-4) from the test set front panel AIR TO CONCENTRATOR port (J7) to fitting assembly (P/N 3309199-1) connected to air inlet port on the concentrator.

14. Connect the air source to the test set AIR INLET PRESSURE port (J4). Turn on the compressor.

15. Remove the test port plug from the concentrator pressure reducer at TP1 port and connect the test set hose assembly (P/N 3309219-1) between the concentrator TP1 port and the test set TEST PORT (J11).

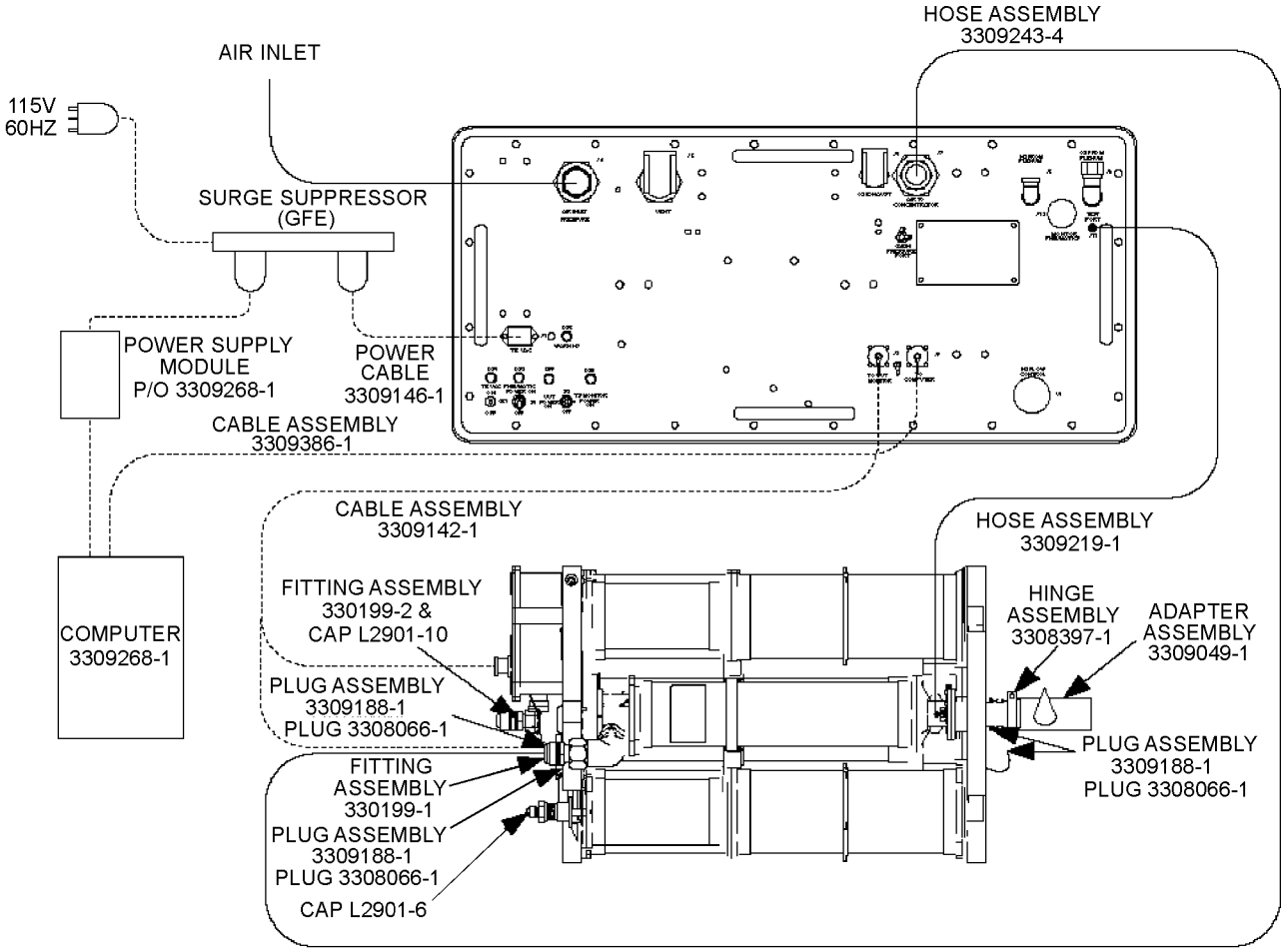

009007

Figure 9-7. O_2N_2 Concentrator Performance Test Setup Using Concentrator Controller/Monitor Only (Leakage Test)

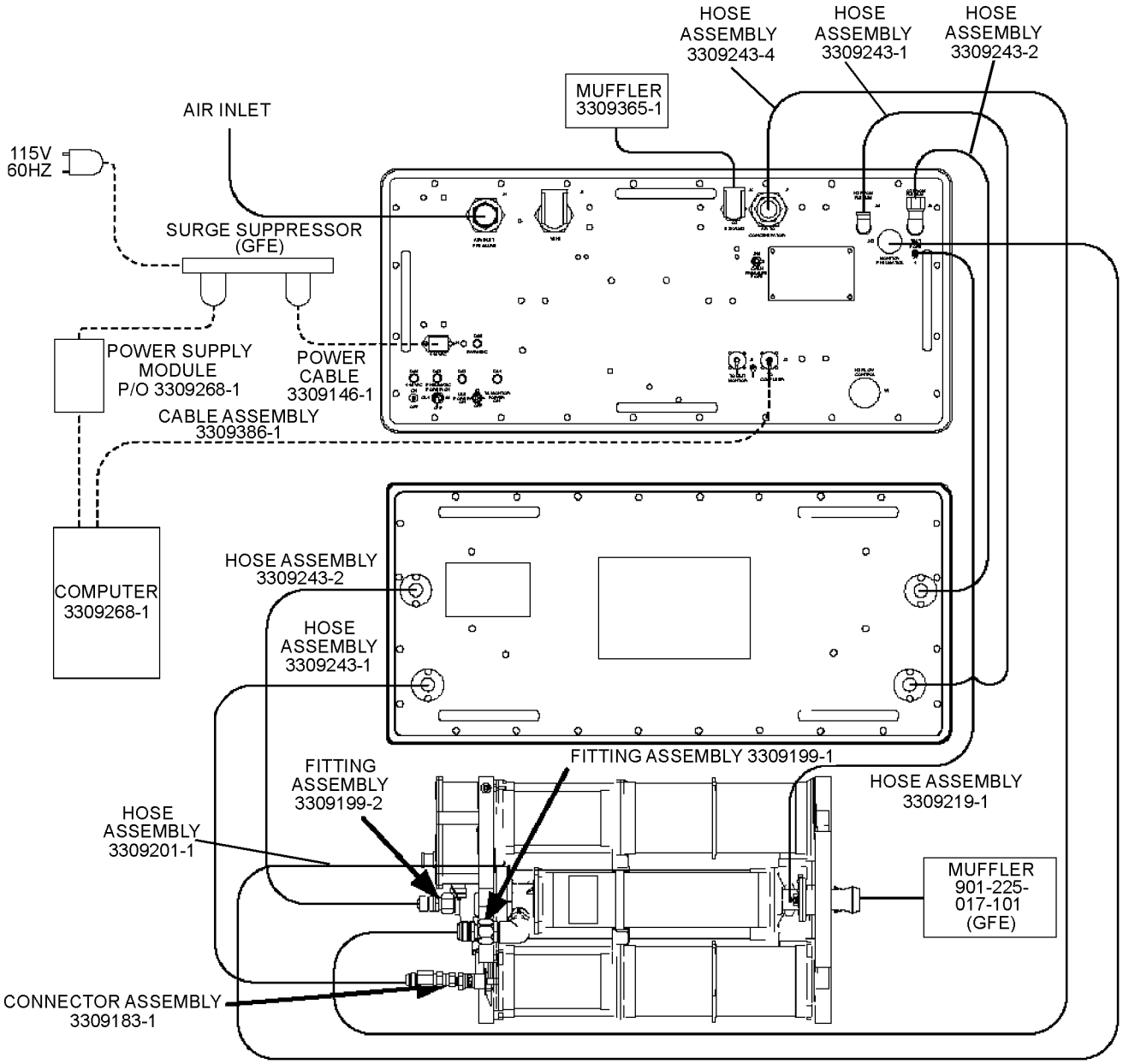

009008

Figure 9-8. O_2N_2 Concentrator Performance Test Setup Using Test Set Controller/Monitor Only (Normal)

16. Connect the muffler (P/N 3309365-1) to the test set O_2 EXHAUST port (J6).

17. Connect the GFE supplied muffler (P/N 901-225-017-101) to the exhaust on the concentrator.

18. Place the computer power switch to the ON position.

19. Place the test set 115 VAC ON/OFF circuit breaker (CB1) to ON.

20. When Windows starts, select the V22 TS icon to start the program.

NOTE

Refer to figure 9-6 for reference O_2N_2 concentrator test set display.

The test set requires a 15-minute warmup period (after 115 VAC ON/OFF (CB1) is turned on) to achieve the specified accuracy. Wait for the T/S Ready light to turn green prior to performing any concentrator acceptance testing.

21. Wait until the TEST SET Warmup counts down to zero, and the T/S Ready light is green.

22. The default screen will appear. Enter the concentrator Serial Number.

23. Refer to the appropriate test for further instructions.

CAUTION

To extend the life of the electronic regulators used in this test set, switch PNEUMATIC POWER ON/OFF (S1) should be in OFF position when concentrator testing or troubleshooting is not in progress.

24. When concentrator testing or troubleshooting is not in progress, set switch PNEUMATIC POWER ON/OFF (S1) to the OFF position.

25. The data files for each test are stored automatically on the computer hard drive in the folder C:\V22_TS\SN\Individual_Test or C:\V22_TS\SN\Acceptance_Test. The file name is then SN.TEST Letter Run#. The file name is the concentrator serial number followed by a file extension that identifies the specific test and the number of times that this has been performed (SN.TEST Letter Run#).

26. For example: C:\V22-TS\001\Individual_Test\001.a03 would indicate the third time the leakage test has been performed on serial number 001.

27. After all concentrator testing is complete, use the Windows file manager to copy all files associated with that particular serial number to a 3-1/2-inch floppy disk. This disk, along with the completed data sheet, will form a permanent record for each concentrator.

9-38. AUTOMATED PERFORMANCE TEST USING TEST SET CONTROLLER/MONITOR ONLY. To perform the automated performance test (****Run All Tests****), proceed as follows:

NOTE

****Run All Tests**** test runs the leakage, pressure reducer, outlet gas performance, concentrator shutdown, and ARINC functional test in sequence. Data from the tests is saved to C:\V22_TS\SN\Acceptance_Test. For a description of each test, refer to the appropriate section below.

1. Ensure the setup has been completed, refer to Test Set Setup Using Test Set Controller/Monitor (paragraph 9-37).

2. Click CONCENTRATOR TEST SELECT menu.

3. Using the mouse, click **** Run All Tests **** and click START. This will activate the test set to perform the testing sequence. During this test, manual instructions will appear on the monitor screen. Follow these instructions as they appear. At the completion of this test, the monitor screen will indicate passed or failed. If a failed indication is displayed, click appropriate tab (example: (A) Leakage Test) to the right of the Notes tab. The Notes text will display information as to the failure(s) that occurred. If failure occurs, refer to appropriate troubleshooting table.

NOTE

After repair or replacement of malfunctioning or damaged parts, the failed test may be run by performing an automated individual test to verify the successful completion of the repair or replacement of parts.

9-39. AUTOMATED INDIVIDUAL TESTS USING TEST SET CONTROLLER/MONITOR ONLY. Each test may be run individually in the automated mode. To perform an individual automated test, proceed as follows:

1. Ensure the setup has been completed, refer to Test Set Setup Using Test Set Controller/Monitor (paragraph 9-37).

2. Click CONCENTRATOR TEST SELECT menu.

3. Using the mouse, click the appropriate individual test (example: (A) Leakage Test) and click START. This will activate the test set to perform the testing sequence. During this test, manual instructions will appear on the monitor screen. Follow these instructions as they appear. At the completion of this test, the monitor screen will indicate passed or failed. If a failed indication is displayed, click appropriate tab (example: (A) Leakage Test) to the right of the Notes tab. The Notes text will display information as to the failure(s) that occurred. Refer to figures 9-4 and 9-8 during testing for correct leakage test setup. If failure occurs, refer to appropriate troubleshooting table.

NOTE

Paragraphs 9-40 through 9-44 contain procedural steps for testing of the concentrator manually for each individual test. The following tests are identical to the automated tests described above but will allow operator interaction.

9-40. LEAKAGE TEST USING TEST SET CONTROLLER/MONITOR ONLY. To perform the leakage test in the manual mode, proceed as follows:

NOTE

Refer to figures 9-4 and 9-9 during testing for correct leakage test setup.

1. Ensure the test setup has been completed, refer to Test Set Setup Using Test Set Controller/Monitor (paragraph 9-37).

2. Remove the GFE supplied muffler (P/N 901-225-017-101) from the concentrator and plug the concentrator exhaust port using the adapter assembly (P/N 3309049-1) and the hinge assembly (P/N 3308397-1). Place the valve on adapter assembly (P/N 3309049-1) to the CLOSED position.

3. Disconnect the concentrator O_2 tubing from the O_2 barb at the concentrator plenum and disconnect the concentrator N_2 tubing from the N_2 barb. Plug the N_2 and O_2 tubing with the plugs (P/N 3308066-1) and plug the O_2 and N_2 barbs with plug assembly (P/N 3309188-1).

4. Disconnect hose assembly (P/N 3309243-1) with connector assembly (P/N 3309183-1) attached from concentrator N_2 Outlet port. Disconnect hose assembly (P/N 3309243-2) from fitting assembly (P/N 3309199-2). Cap the N_2 Outlet port on the concentrator with the cap (P/N L2901-6) and cap the O_2 Outlet port on the concentrator with the fitting assembly (P/N 3309199-2) and cap (P/N L2901-10).

5. Remove the concentrator EXH tubing from the concentrator EXH barb and plug the concentrator EXH tube barb with the plug assembly (P/N 3309188-1).

6. Place switch PNEUMATIC POWER ON/OFF (S1) and switch UUT POWER ON/OFF/TS MONITOR POWER ON (S2) to the ON position and click UUT On/Off to on.

NOTE

Adjust the UUT Inlet Press by pressing the Inlet Press button, place mouse cursor in box, click left mouse button, enter desired pressure, and press UUT Set Press button or by pressing the ↑ or ↓ arrows to obtain a pressure.

7. Adjust the UUT Inlet Press to obtain a pressure of 35 ± 1 psig. Click Reset button of the STOPWATCH and pressurize the concentrator for 3 minutes. After 3 minutes, plug the tubing labeled EXH with a tube plug (P/N 3308066-1).

8. Record initial UUT Reg Press (TP1) pressure reading on Performance Test Sheet.

9. Click UUT On/Off to off and click Reset button of the STOPWATCH.

10. After 5 minutes, record UUT Reg Press (TP1) pressure reading on Performance Test Sheet.

11. Record difference between steps 8 and 10 on Performance Test Sheet. The difference between the two readings shall not exceed 8 psi.

12. Slowly move the valve on the adapter assembly to the OPEN position.

13. Remove the test set plugs (P/N 3308066-1) and plug assemblies (P/N 3309188-1) from the concentrator O_2 and N_2 barbs and tubing.

14. Remove the test set plug (P/N 3308066-1) and plug assembly (P/N 3309188-1) from the EXH port and tubing. Reconnect the EXH tubing to the EXH barb on the concentrator exhaust tube.

15. Remove the hinge assembly (P/N 3308397-1) and the adapter assembly (P/N 3309049-1). Reconnect the GFE supplied muffler (901-225-017-101) to the concentrator exhaust port.

16. Remove the caps (P/N L2901-10 and P/N L2901-6) and from the concentrator O_2 and N_2 outlet ports. Reconnect the tubing to the O_2 and N_2 barbs.

17. Reconnect connector assembly (P/N 3309183-1) with hose (P/N 3309243-1) attached to concentrator N_2 outlet port. Disconnect end of hose assembly (P/N 3309243-1) connected to plenum port (J13) and connect adapter assembly (P/N 3309340-1) to test set hose assembly.

18. Connect leakage hose assembly (P/N 3309215-1) to adapter assembly. Disconnect hose from test set TEST PORT (J11) and connect leakage hose assembly to test set TEST PORT (J11).

19. Adjust the UUT Inlet Press to obtain a pressure of 27 ±1 psig.

20. From the Test Set menu, set J11 Test Pressure On. Click Start button of the STOPWATCH.

21. After two minutes, set J11 Test Pressure off. Set UUT Inlet Press to 0.0 psig.

22. Record initial UUT Reg Press (TP1) pressure reading on Performance Test Sheet.

23. Click Reset button of the STOPWATCH.

24. After 5 minutes, record UUT Reg Press (TP1) pressure reading on Performance Test Sheet.

25. Record difference between steps 22 and 24 on Performance Test Sheet. The difference between the two readings shall be less than 5 psi.

26. Disconnect leakage hose assembly from test set TEST PORT (J11) and adapter assembly. Reconnect hose from concentrator TP1 to test set TEST PORT (J11). Remove adapter assembly.

27. Reconnect the test set hoses between plenum assembly and concentrator O_2 and N_2 outlet ports.

28. If malfunction occurs, refer to troubleshooting (table 9-7).

29. If readings are within tolerance, place switch PNEUMATIC POWER ON/OFF (S1) to the OFF position. Wait until no audible flow from the concentrator is evident, and then place switch UUT POWER ON/OFF/TS MONITOR POWER ON (S2) to the OFF position. Disconnect the concentrator from the test set.

9-41. PRESSURE REDUCER TEST USING TEST SET CONTROLLER/MONITOR ONLY. To perform the pressure reducer test in the manual mode, proceed as follows:

NOTE

Refer to figure figures 9-4 and 9-8 during testing for correct test setup.

1. Ensure the setup has been completed, refer to Test Set Setup Using Test Set Controller/Monitor (paragraph 9-37).

2. Place switch PNEUMATIC POWER ON/OFF (S1) and switch UUT POWER ON/OFF/TS MONITOR POWER ON (S2) to the ON position and click UUT On/Off to on.

NOTE

Adjust the OXYGEN OUTLET Flow by pressing the OXYGEN OUTLET Flow button, place mouse cursor in box, click left mouse button, enter desired flow, and press OXYGEN OUTLET Set Flow button or by pressing the ↑ or ↓ arrows to obtain a flow.

3. Set the OXYGEN OUTLET Flow to obtain 230 ±2 lpm.

4. If necessary, adjust test set panel N_2 FLOW CONTROL valve (V1) until the NITROGEN OUTLET Pressure is 2.0 ±0.25 psig.

5. Record UUT Reg Press (TP1) pressure reading on Performance Test Sheet. The pressure swing shall be 20 to 30 psig.

NOTE

Adjust the UUT Inlet Press by pressing the Inlet Press button, place mouse cursor in box, click left mouse button, enter desired pressure, and press UUT Set Press button or by pressing the ↑ or ↓ arrows to obtain a pressure.

6. Adjust the UUT Inlet Press to obtain a pressure of 25 +0,-1 psig.

7. Record UUT Reg Press (TP1) pressure reading on Performance Test Sheet. The pressure swing shall be 16 to 26 psig.

8. Adjust the UUT Inlet Press pressure to obtain a pressure of 35 ±1 psig. Adjust the OXYGEN OUTLET Flow to obtain 30 ±1 lpm.

9. If malfunction occurs, refer to troubleshooting (table 9-8).

10. If readings are within tolerance, place switch PNEUMATIC POWER ON/OFF (S1) to the OFF position. Wait until no audible flow from the concentrator is evident, and then place switch UUT POWER ON/OFF/TS MONITOR POWER ON (S2) to the OFF position. Disconnect the concentrator from the test set.

9-42. OUTLET GAS PERFORMANCE TEST USING TEST SET CONTROLLER/MONITOR ONLY. To perform outlet gas performance test in the manual mode, proceed as follows:

NOTE

Refer to figure figures 9-4 and 9-8 during testing for correct test setup.

1. Ensure the setup has been completed, refer to Test Set Setup Using Test Set Controller/Monitor (paragraph 9-37).

2. Place switch PNEUMATIC POWER ON/OFF (S1) and switch UUT POWER ON/OFF/TS MONITOR POWER ON (S2) to the ON position and click UUT On/Off to on.

NOTE

Adjust the UUT Inlet Press by pressing the Inlet Press button, place mouse cursor in box, click left mouse button, enter desired pressure, and press UUT Set Press button or by pressing the ↑ or ↓ arrows to obtain a pressure.

3. Adjust the UUT Inlet Press to obtain a pressure of 35.0 ±1 psig.

NOTE

Adjust the OXYGEN OUTLET Flow by pressing the OXYGEN OUTLET Flow button, place mouse cursor in box, click left mouse button, enter desired flow, and press OXYGEN OUTLET Set Flow button or by pressing the ↑ or ↓ arrows to obtain a flow.

4. Adjust the OXYGEN OUTLET Flow to obtain a flow of 230 ±2 lpm.

5. If necessary, adjust the test set panel N_2 FLOW CONTROL valve (V1) until the NITROGEN OUTLET Pressure is 2.0 ±0.25 psig.

6. Click Reset button of the STOPWATCH and allow concentrator to operate at least 5 minutes or until outlet pressures and oxygen concentrations stabilize. Listen for pressure cycling.

7. If necessary, set the OXYGEN OUTLET Pressure to read in psig. Record the average OXYGEN OUTLET Pressure on Performance Test Sheet. The average shall be greater than 20 psig.

8. Record the OXYGEN OUTLET Concentration percentages on Performance Test Sheet. The OXYGEN OUTLET Concentration shall be 25.7% minimum.

9. Record the NITROGEN OUTLET Concentration percentages on Performance Test Sheet. The NITROGEN OUTLET Concentration shall be 7.0% maximum.

10. Record NITROGEN OUTLET Flow on Performance Test Sheet. The average flow shall be 65.1 slpm minimum (0.166 lb/min minimum).

11. Set the OXYGEN OUTLET Flow to obtain a flow of 30 ±1 lpm.

12. Click Reset button of the STOPWATCH and allow concentrator to operate at least 10 minutes or until the oxygen concentrations stabilize. Record OXYGEN OUTLET Concentration percentage on Performance Test Sheet. The OXYGEN OUTLET Concentration shall be 83% minimum.

13. If malfunction occurs, refer to troubleshooting (table 9-9).

14. If readings are within tolerance, place switch PNEUMATIC POWER ON/OFF (S1) to the OFF position. Wait until no audible flow from the concentrator is evident, and then place switch UUT POWER ON/OFF/TS MONITOR POWER ON (S2) to the OFF position. Disconnect the concentrator from the test set.

9-43. CONCENTRATOR SHUTDOWN TEST USING TEST SET CONTROLLER/MONITOR ONLY. To perform the concentrator shutdown test in the manual mode, proceed as follows:

NOTE

Refer to figure figures 9-4 and 9-8 during testing for correct test setup.

1. Ensure the setup has been completed, refer to Test Set Setup Using Test Set Controller/Monitor (paragraph 9-37).

2. Place switch PNEUMATIC POWER ON/OFF (S1) and switch UUT POWER ON/OFF/TS MONITOR POWER ON (S2) to the ON position and click UUT On/Off to on.

NOTE

Adjust the UUT Inlet Press by pressing the Inlet Press button, place mouse cursor in box, click left mouse button, enter desired pressure, and press UUT Set Press button or by pressing the ↑ or ↓ arrows to obtain a pressure.

3. Adjust the UUT Inlet Press to obtain a pressure of 35.0 ±1 psig.

NOTE

Adjust the OXYGEN OUTLET Flow by pressing the OXYGEN OUTLET Flow button, place mouse cursor in box, click left mouse button, enter desired flow, and press OXYGEN OUTLET Set Flow button or by pressing the ↑ or ↓ arrows to obtain a flow.

4. Set the OXYGEN OUTLET Flow to a flow of 230 ±2 lpm.

5. If necessary, adjust test set panel N_2 FLOW CONTROL valve (V1) until the NITROGEN OUTLET Pressure is 2.0 ±0.25 psig.

6. Click Reset button of the STOPWATCH and allow concentrator to operate at least 1 minute.

7. Simultaneously place switch UUT POWER ON/OFF/TS MONITOR POWER ON (S2) to the OFF position and click Reset button of the STOPWATCH. If UUT Reg Press (TP1) goes to less than 2 psig within 90 seconds, place a check mark in appropriate space on Performance Test Sheet.

8. Place switch UUT POWER ON/OFF/TS MONITOR POWER ON (S2) to the ON position. If pressure cycling resumes as indicated by the UUT Reg Press (TP1), place a check mark in appropriate space on Performance Test Sheet. Allow the concentrator to operate for at least 3 1/2 minutes.

9. In the CONTROL WORD 1 box; click -24 SYSTEM OFF until a √ is indicated in its box. Click SEND button and immediately click Reset button of the STOPWATCH. If UUT Reg Press (TP1) goes to less than 2 psig within 90 seconds and ARINC status word 1-20 (O_2N_2 System Shutdown) is set to 1, place a check mark in appropriate space on Performance Test Sheet.

10. In the CONTROL WORD 1 box; click -24 SYSTEM OFF until the √ is removed from the box and click SEND button.

11. Place switch PNEUMATIC POWER ON/OFF (S1) to the OFF position and allow the concentrator to operate until the UUT REG PRESS goes to approximately zero.

12. If malfunction occurs, refer to troubleshooting (table 9-10).

13. If readings are within tolerance, wait until no audible flow from the concentrator is evident, and then place switch UUT POWER ON/OFF/TS MONITOR POWER ON (S2) to the OFF position. Disconnect the concentrator from the test set.

9-44. ARINC FUNCTIONAL TEST USING TEST SET CONTROLLER/MONITOR ONLY. To perform the ARINC functional test in the manual mode, proceed as follows:

NOTE

Refer to figure figures 9-4 and 9-8 during testing for correct test setup.

1. Ensure the setup has been completed, refer to Test Set Setup Using Test Set Controller/Monitor (paragraph 9-37).

2. Place switch PNEUMATIC POWER ON/OFF (S1) and switch UUT POWER ON/OFF/TS MONITOR POWER ON (S2) to the ON position and click UUT On/Off to On.

NOTE

Adjust the UUT Inlet Press by pressing the Inlet Press button, place mouse cursor in box, click left mouse button, enter desired pressure, and press UUT Set Press button or by pressing the ↑ or ↓ arrows to obtain a pressure.

3. Adjust the UUT Inlet Press to obtain a pressure of 35.0 ±1 psig.

NOTE

Adjust the OXYGEN OUTLET Flow by pressing the OXYGEN OUTLET Flow button, place mouse cursor in box, click left mouse button, enter desired flow, and press OXYGEN OUTLET Set Flow button or by pressing the ↑ or ↓ arrows to obtain a flow.

4. Set the OXYGEN OUTLET Flow to a flow of 230 ±2 lpm.

5. If necessary, adjust test set panel N_2 FLOW CONTROL valve (V1) until the NITROGEN OUTLET Pressure is 2.0 ±0.25 psig.

6. From the Test Set Menu, set Test Mode Monitor (ARINC) on. Set OXYGEN OUTLET Pressure to read in psia.

7. Allow the concentrator to operate for a minimum of 15 minutes. Compare the following test set readings with the concentrator ARINC output readings and record on Performance Test Sheet. The concentrator readings shall be within the tolerances shown.

O_2 PRESS	± 3.0 psia
O_2 %	± 3.0%
CAB	± 10mmHg
N_2 %	± 1.5%
PPO_2	± 20mmHg

8. Place switch UUT POWER ON/OFF/TS MONITOR POWER ON (S2) to the OFF position and allow the UUT REG Press (TP1) to bleed to approximately zero.

9. Place switch UUT POWER ON/OFF/TS MONITOR POWER ON (S2) to the ON position. If WARNING light (DS5) extinguishes within 3 minutes and no ARINC failures are indicated after 3 1/2 minutes (Status words 2-15, 2-16, 2-18, 2-19, 2-20, 2-21, 2-22, 2-23, and 2-24 are all 0), place a check mark in appropriate space on Performance Test Sheet.

10. Click -28 IBIT INITIATE in the CONTROL WORD 1 box located in the upper right corner of the screen and then click SEND button. Verify that STATUS WORD 1 [1] -28 IBIT Prog is displayed.

11. After approximately 30-40 seconds, if [1] -29 IBIT Comp, [0] -28 IBIT Prog, and [0] -27 IBIT Fail is displayed in the STATUS WORD 1 box. (IBIT Complete.), place a check mark in appropriate space on Performance Test Sheet.

12. Click -27 MBIT INITIATE in the CONTROL WORD 1 box located in the upper right corner of the screen and then click SEND button. Verify that STATUS WORD 1 [1] -16 MBIT Prog is displayed after a few seconds.

13. After approximately 5 1/2 minutes, if [1] -17 MBIT Comp, [0] -16 MBIT Prog, and [0] -15 MBIT Fail is displayed in the STATUS WORD 1 box. (MBIT Complete.), place a check mark in appropriate space on Performance Test Sheet.

14. Set the OXYGEN OUTLET Flow to a flow of 75.0 ±5 lpm. If necessary, set the OXYGEN OUTLET PRESSURE to read in psia.

15. Set UUT INLET Press to 11 psig. Slowly adjust the UUT INLET Press by pressing the ↓ arrow until the STATUS WORD 2 box displays [1] - 21 Low O_2 Press. Record OXYGEN OUTLET Pressure on Performance Test Sheet. The pressure shall be between 19 and 23 psia.

16. Set the OXYGEN OUTLET Pressure to read in psig.

17. If malfunction occurs, refer to troubleshooting (table 9-11).

18. If readings are within tolerance, place switch PNEUMATIC POWER ON/OFF (S1) to the OFF position. Wait until no audible flow from the concentrator is evident, and then place switch UUT POWER ON/OFF/TS MONITOR POWER ON (S2) to the OFF position. Disconnect concentrator from the test set.

9-45. TROUBLESHOOTING.

9-46. Troubleshooting is prepared in a logical sequence. Due to the complex wiring, each step will identify the type of test or inspection, with tolerances, to be performed with the expected end results. All tests and steps permit only two outcomes. Each item to be replaced is identified in replacement steps. After performing a repair task, recheck the operation of the concentrator component. If the malfunction is corrected, that is the end of the procedure; if not, proceed to the next step in the troubleshooting table or to the next troubleshooting table indicated. Once the malfunction has been corrected, return to bench test procedures and continue testing the concentrator. Troubleshoot the concentrator using the procedure outlined in tables 9-2 through 9-11.

Materials Required

Quantity	Description	Reference Number
As Required	Air, Pressurized, Clean and Dry	—
As Required	Compound, Leak Detection	MIL-PRF-25567, Type I

Support Equipment Required

Quantity	Description	Reference Number
1	Multimeter	Type 77/BN or equivalent (CAGE 89536)
1	Test Lead Wire	ALB24RED or equivalent (CAGE 05276)
1	Test Lead Wire	ALB24BLACK or equivalent (CAGE 05276)

Table 9-2. Troubleshooting (Leakage Test) using Concentrator Controller/Monitor

TROUBLE	PROBABLE CAUSE	REMEDY
9-30. Step 3 Failed indication is displayed.	See below.	Isolate by performing leakage test (paragraph 9-32).
9-32. Step 11 Internal/external leakage exceeds 8 psig in 5 minutes.	Foreign material, dirt, loose screws, defective preformed packing, or other damage. Check valve assemblies defective.	Isolate by performing steps below.
NOTE Ensure all test hose assemblies from test setup to concentrator are properly attached and not leaking. 1. Using leak detection compound, inspect concentrator for external leakage. a. If external leak is detected as indicated by bubbles, visually inspect for foreign matter, defective component parts, or other obvious damage; clean, repair, or replace component parts as necessary and perform bench test. b. If no external leak is detected, then proceed to step 2. 2. If leakage is suspected of being internal, then perform the following: a. If check valve assemblies were not replaced in step 1a, then remove check valve assemblies CV1 and CV2 (paragraph 9-50) and check valve assemblies CV3 and CV4 (paragraph 9-51). Replace check valve assemblies CV1 and CV2 (paragraph 9-82) and check valve assemblies CV3 and CV4 (paragraph 9-81) and perform bench test. b. If internal leakage is still suspected, remove faulty controller/monitor assembly (paragraph 9-49). Replace controller/monitor assembly (paragraph 9-83) and perform bench test.		
9-32. Step 25 Internal/external leakage exceeds 5 psig in 5 minutes.	Check valve (CV5) faulty.	Remove faulty check valve (CV5) (paragraph 9-51) and replace check valve (CV5) (paragraph 9-81)

Table 9-3. Troubleshooting (Pressure Reducer Test) using Concentrator Controller/Monitor

TROUBLE	PROBABLE CAUSE	REMEDY
9-30. Step 3 Failed indication is displayed.	See below.	Isolate by performing pressure reducer test (paragraph 9-33).
9-33. Step 5 UUT Reg Press (TP1) indication less than 20.	Inlet pressure low.	Ensure UUT Inlet Press is 35 ± 1 psig.
	Filter (FLTR1) clogged.	Replace faulty filter (FLTR1) (paragraph 9-84).
	Shutoff valve (V1) faulty.	Perform concentrator shutdown test (paragraph 9-35).
	Pressure reducer (REG1) adjusted incorrectly.	Adjust setscrew on reducer assembly for 25 ± 1 psig. Refer to Figure 9-4. (turn setscrew clockwise to increase pressure) (turn setscrew counterclockwise to decrease pressure)
	Leakage.	Perform leakage test (paragraph 9-32).

Table 9-3. Troubleshooting (Pressure Reducer Test) Using Concentrator Controller/Monitor (Cont)

TROUBLE	PROBABLE CAUSE	REMEDY
9-33. Step 5 UUT Reg Press (TP1) indication greater than 30.	Inlet pressure high. Pressure reducer (REG1) adjusted incorrectly.	Ensure UUT Inlet Press is 35 ±1 psig. Adjust setscrew on reducer assembly for 25 ±1 psig. Refer to figure 9-4. (turn setscrew clockwise to increase pressure) (turn setscrew counterclockwise to decrease pressure)
9-33. Step 7 UUT Reg Press (TP1) indication less than 16.	Inlet pressure low. Filter (FLTR1) clogged. Shutoff valve (V1) faulty. Leakage.	Ensure UUT Inlet Press is 25 +0,-1 psig. Replace faulty filter (FLTR1) (paragraph 9-84). Perform concentrator shutdown test (paragraph 9-35). Perform leakage test (paragraph 9-32).
9-33. Step 7 UUT Reg Press (TP1) indication greater than 26.	Inlet pressure high.	Ensure UUT Inlet Press is 25 +0,-1 psig.

Table 9-4. Troubleshooting (Outlet Gas Performance Test) Using Concentrator Controller/Monitor

TROUBLE	PROBABLE CAUSE	REMEDY
9-30. Step 3 Failed indication is displayed.	See below.	Isolate by performing outlet gas performance test (paragraph 9-34).
9-34. Step 6 No pressure cycles (high to low flow) at output of concentrator.	Faulty controller/monitor assembly. Slide valve assembly (V2).	Isolate by performing steps below.

1. Set test set switch S2 to the OFF position. Disconnect (P1) of test set cable P/N 3309142-1 from controller/monitor assembly. Connect multimeter set to measure 28 VDC between pins (D) (+) and (C) (-). Set test set switch S2 to the ON position and measure 28VDC.
   a. If voltage is not present, return test set for maintenance.
   b. If voltage is present, proceed to step 2.
2. Set test set switch S2 to the OFF position. Disconnect multimeter from between pins (D) (+) and (C) (-). Connect (P1) of test set cable P/N 3309142-1 to controller/monitor assembly. Set test set switch S2 to the ON position, proceed to step 3.
3. Disconnect labeled plastic tubing V2 from both sides of slide valve assembly tube fittings and check for pressure from end of one labeled plastic tubing; and during operation of controller/monitor assembly, ensure that pressure is cycling alternately between labeled plastic tubings V2.
   a. If pressure is not present or is not cycling from labeled plastic tubings V2 on slide valve, remove faulty controller/monitor assembly (paragraph 9-49). Replace controller/monitor assembly (paragraph 9-83) and perform bench test.

Table 9-4. Troubleshooting (Outlet Gas Performance Test) using Concentrator Controller/Monitor (Cont)

TROUBLE	PROBABLE CAUSE	REMEDY
b. If pressure is present and is cycling from labeled plastic tubings V2, then remove slide valve assembly (V2) (paragraph 9-60), install new slide valve assembly (V2) (paragraph 9-72), and perform bench test.		
9-34. Step 7 Oxygen outlet pressure is less than 20 psig.	Inlet pressure low. Pressure reducer (REG1). Oxygen sieve beds (BED 1 O_2 and BED 2 O_2).	Isolate by performing steps below.
1. If UUT Inlet Press pressure is low, then check for low facility air pressure or adjust UUT Inlet Press for 35 ± 1 psig pressure and continue bench test. 2. If UUT Reg Press (TP1) pressure is low, then perform pressure reducer test (paragraph 9-33). 3. If UUT Reg Press (TP1) pressure is within limits, then remove faulty oxygen bed assemblies (right and left) (paragraph 9-61), replace oxygen bed assemblies (right and left) (paragraph 9-71) as a set, and perform bench test.		
9-34. Step 8 Oxygen outlet O_2 concentration percentage not within limits.	Inlet pressure low. Outlet flow rate adjustment. Check valves (CV1 and CV2). Sieve beds.	Isolate by performing steps below.
1. Check inlet pressure, then adjust as required and continue bench test. 2. Check outlet flow rates, then adjust as required and continue bench test. 3. Observe test set display for O_2 percentage; if O_2 outlet oxygen concentration percentage is low, then perform the following steps: a. Remove faulty check valves (CV1 and CV2) (paragraph 9-50), install check valves (CV1 and CV2) (paragraph 9-82), and perform bench test. b. Remove faulty oxygen bed assemblies (right and left) (paragraph 9-61), replace oxygen bed assemblies (right and left) (paragraph 9-71) as a set, and perform bench test.		
9-34. Step 9 Nitrogen outlet O_2 concentration percentages not within limits.	Inlet pressure low. Outlet flow rate adjustment. Check valves (CV3 and CV4). Sieve beds.	Isolate by performing steps below.
1. Check inlet pressure, then adjust as required and continue bench test. 2. Check outlet flow rates, then adjust as required and continue bench test. 3. Observe test set display for low N_2 percentages, if N_2 outlet oxygen concentration percentages is low, then perform the following steps: a. Remove faulty check valves (CV3 and CV4) (paragraph 9-51), install check valves (CV3 and CV4) (paragraph 9-81), and perform bench test. b. Remove faulty nitrogen bed assemblies (right and left) (paragraph 9-61), replace nitrogen bed assemblies (right and left) (paragraph 9-71) as a set, and perform bench test.		
9-34. Step 10 Nitrogen outlet flow is less than expected rate.	Outlet flow rate adjustment. Check valve (CV5). Check valves (CV3 through CV4).	Isolate by performing steps below.
1. Check outlet flow rate, then adjust flow rate as required and continue bench test.		

Table 9-4. Troubleshooting (Outlet Gas Performance Test) Using Concentrator Controller/Monitor (Cont)

TROUBLE	PROBABLE CAUSE	REMEDY
2. Observe test set NITROGEN OUTLET Flow display for low nitrogen flow, if flow is low, perform the following: a. Remove faulty check valve (CV5) (paragraph 9-51), replace check valve (CV5) (paragraph 9-81), and perform bench test. b. Remove faulty check valves (CV3 and CV4) (paragraph 9-51), install check valves (CV3 and CV4) (paragraph 9-81), and perform bench test.		
9-34. Step 12 Oxygen concentration less than 83%.	Outlet flow rate adjustment. Check valves (CV1 and CV2). Sieve beds.	Isolate by performing steps below.
1. Check outlet flow rates and adjust as required. 2. Observe test set display for low O_2 percentage; if O_2 outlet oxygen concentration percentage is less than 83%, then perform the following steps: a. Remove faulty check valves (CV1 and CV2) (paragraph 9-50), install new check valves (CV1 and CV2) (paragraph 9-82), and perform bench test. b. Remove faulty oxygen bed assemblies (right and left) (paragraph 9-61), replace oxygen bed assemblies (right and left) (paragraph 9-71) as a set and perform bench test.		

Table 9-5. Troubleshooting (Concentrator Shutdown Test) Using Concentrator Controller/Monitor

TROUBLE	PROBABLE CAUSE	REMEDY
9-30. Step 3 Failed indication is displayed.	See below.	Isolate by performing concentrator shutdown test (paragraph 9-35).
9-35. Step 7 Pressure indication does not go to less than 2 psig when test set UUT POWER ON/OFF (S2) switch is turned off.	Shutoff valve (V1). Controller/monitor assembly.	Isolate by performing steps below.
1. Observe UUT Reg Press (TP1) pressure, then remove labeled plastic tubing V1 from back of controller/monitor assembly at tube retainer disc assembly: a. If pressure is not present, then remove faulty controller/monitor assembly (paragraph 9-49). Replace controller/monitor assembly (paragraph 9-83) and perform bench test. b. If pressure is present, then remove shutoff/filter/regulator assembly (paragraph 9-53), disassemble shutoff valve/filter assembly (V1) (paragraph 9-54), replace faulty parts, reassemble shutoff valve/filter assembly (V1) (paragraph 9-77), install shutoff/filter/regulator assembly (paragraph 9-79), and perform bench test.		
9-35. Step 8 No pressure cycles (high to low flow) at output of concentrator.	Controller/monitor assembly. Slide valve assembly (V2).	Isolate by performing steps below.
1. Set test set switch S2 to the OFF position. Disconnect (P1) of test set cable P/N 3309142-1 from controller/monitor assembly. Connect multimeter set to measure 28 VDC between pins (D) (+) and (C) (-). Set test set switch S2 to the ON position and measure 28 VDC. a. If voltage is not present, return test set for repair. b. If voltage is present, proceed to step 2.		

Table 9-5. Troubleshooting (Concentrator Shutdown Test) using Concentrator Controller/Monitor (Cont)

TROUBLE	PROBABLE CAUSE	REMEDY
2. Set test set switch S2 to the OFF position. Disconnect multimeter from between pins (D) (+) and (C) (-). Connect (P1) of test set cable P/N 3309142-1 to controller/monitor assembly. Set test set switch S2 to the ON position, proceed to step 3. 3. Disconnect labeled plastic tubing V2 from both sides of slide valve assembly tube fittings and check for pressure from end of one labeled plastic tubing; and during operation of controller/monitor assembly, ensure that pressure is cycling alternately between labeled plastic tubings V2. a. If pressure is not present or is not cycling from labeled plastic tubings V2 on slide valve, then remove faulty controller/monitor assembly (paragraph 9-49). Replace controller/monitor assembly (paragraph 9-83) and perform bench test. b. If pressure is present and is cycling from labeled plastic tubings V2, then remove faulty slide valve assembly (V2) (paragraph 9-60), install slide valve assembly (V2) (paragraph 9-72), and perform bench test.		
9-35. Step 9 Pressure indication does not go to zero on proper ARINC command.	Shutoff valve (V1). Controller/monitor assembly.	Isolate by performing steps below.
1. Observe UUT Reg Press (TP1) pressure, then remove labeled plastic tubing V1 from back of controller/monitor assembly at tube retainer disc assembly: a. If pressure is not present, then remove faulty controller/monitor assembly (paragraph 9-49). Replace controller/monitor assembly (paragraph 9-83) and perform bench test. b. If pressure does not go to zero, then remove shutoff/filter/regulator assembly (paragraph 9-53), disassemble shutoff valve/filter assembly (V1) (paragraph 9-54), replace faulty parts, reassembly shutoff valve/filter assembly (V1) (paragraph 9-77), install shutoff/filter/regulator assembly (paragraph 9-79), and perform bench test.		

Table 9-6. Troubleshooting (ARINC Functional Test) using Concentrator Controller/Monitor

TROUBLE	PROBABLE CAUSE	REMEDY
9-30. Step 3 Failed indication is displayed.	See below.	Isolate by performing ARINC functional test (paragraph 9-36).
9-36. Step 7 ARINC and concentrator readings do not agree.	Controller/monitor assembly.	Isolate by performing steps below.
1. If ARINC and concentrator readings do not agree: a. Connect test set internal controller/monitor as shown in figure 9-8, run ARINC functional test (paragraph 9-44), if fault is corrected then remove faulty controller/monitor assembly (paragraph 9-49). Replace controller/monitor assembly (paragraph 9-83) and perform bench test. b. If readings still do not agree return test set for maintenance.		
9-36. Step 9 Discrete warning light did not go off within 3 minutes.	Controller/monitor assembly.	Isolate by performing steps below.

Table 9-6. Troubleshooting (ARINC Functional Test) using Concentrator Controller/Monitor (Cont)

TROUBLE	PROBABLE CAUSE	REMEDY
1. If discrete warning light did not go off within 3 minutes: a. And test set UUT Oxygen Concentration indication is within limits, then remove faulty controller/monitor assembly (paragraph 9-49). Replace controller/monitor assembly (paragraph 9-83) and perform bench test. b. And test set UUT Oxygen Concentration indication is not within limits, then proceed to troubleshooting table 9-4.		
9-36. Step 9 ARINC indicates failure(s).	Controller/monitor assembly. PSA assembly.	Isolate by performing steps below.
1. If failure(s) are indicated by the ARINC after 3 minutes and all instrumentation is "OK", connect test set internal controller/monitor as shown in figure 9-8, run ARINC functional test (paragraph 9-44), then remove faulty controller/monitor assembly (paragraph 9-49). Replace controller/monitor assembly (paragraph 9-83) and perform bench test. 2. If fault is still present, then proceed to troubleshooting table 9-4 and 9-5 for possible corrective action on the PSA assembly.		
9-36. Step 11 I-BIT not complete or ARINC indicates failure(s).	Controller/monitor assembly.	Isolate by performing steps below.
1. If I-BIT does not complete after 30 seconds, connect test set internal controller/monitor as shown in figure 9-8, run ARINC functional test (paragraph 9-44), if fault is corrected, then remove faulty controller/monitor assembly (paragraph 9-49). Replace controller/monitor assembly (paragraph 9-83) and perform bench test. 2. If fault is still present, then proceed to troubleshooting table 9-4 and 9-5 for possible corrective action on the PSA assembly.		
9-36. Step 13 M-BIT not complete or ARINC indicates failure(s).	Controller/monitor assembly.	Isolate by performing steps below.
1. If M-BIT does not complete after 5 minutes and 30 seconds, connect test set internal controller/monitor as shown in figure 9-8, run ARINC functional test (paragraph 9-44), if fault is corrected, then remove faulty controller/monitor assembly (paragraph 9-49). Replace controller/monitor assembly (paragraph 9-83) and perform bench test. 2. If fault is still present, then proceed to troubleshooting table 9-4 and 9-5 for possible corrective action on the PSA assembly.		
9-36. Step 15 STATUS WORD 2 box does not display [1] - 21 Low O_2 Press or OXYGEN OUTLET Pressure not between 19 and 23 psia.	Controller/monitor assembly.	Isolate by performing steps below.
1. STATUS WORD 2 box does not display [1] - 21 Low O_2 Press or OXYGEN OUTLET Pressure not between 19 and 23 psia, connect test set internal controller/monitor as shown in figure 9-8, run ARINC functional test (paragraph 9-44), if fault is corrected, then remove faulty controller/monitor assembly (paragraph 9-49). Replace controller/monitor assembly (paragraph 9-83) and perform bench test. 2. If fault is still present, then proceed to troubleshooting table 9-4 and 9-5 for possible corrective action on the PSA assembly.		

Table 9-7. Troubleshooting (Leakage Test) Using Test Set Controller/Monitor

TROUBLE	PROBABLE CAUSE	REMEDY
9-38. Step 3 Failed indication is displayed.	See below.	Isolate by performing leakage test (paragraph 9-40).
9-40. Step 11 Internal/external leakage exceeds 8 psig in 5 minutes.	Foreign material, dirt, loose screws, defective preformed packing, or other damage. Check valve assemblies defective.	Isolate by performing steps below.
NOTE Ensure all test hose assemblies from test setup to concentrator are properly attached and not leaking. 1. Using leak detection compound, inspect concentrator for external leakage. a. If external leak is detected as indicated by bubbles, visually inspect for foreign matter, defective component parts, or other obvious damage; clean, repair, or replace component parts as necessary and perform bench test. b. If no external leak is detected, then proceed to step 2. 2. If leakage is suspected of being internal, then perform the following: a. If check valve assemblies were not replaced in step 1a, then remove check valve assemblies CV1 and CV2 (paragraph 9-50) and check valve assemblies CV3 and CV4 (paragraph 9-51). Replace check valve assemblies CV1 and CV2 (paragraph 9-82) and check valve assemblies CV3 and CV4 (paragraph 9-81) and perform bench test. b. If internal leakage is still suspected, return test set for maintenance.		
9-40. Step 25 Internal/external leakage exceeds 5 psig in 5 minutes.	Check valve (CV5) faulty.	Remove faulty check valve (CV5) (paragraph 9-51) and replace check valve (CV5) (paragraph 9-81).

Table 9-8. Troubleshooting (Pressure Reducer Test) Using Test Set Controller/Monitor

TROUBLE	PROBABLE CAUSE	REMEDY
9-38. Step 3 Failed indication is displayed.	See below.	Isolate by performing pressure reducer test (paragraph 9-41).
9-41. Step 5 UUT Reg Press (TP1) indication less than 20.	Inlet pressure low.	Ensure UUT Inlet Press is 35 ± 1 psig.
	Filter (FLTR1) clogged.	Replace faulty filter (FLTR1) (paragraph 9-84).
	Shutoff valve (V1) faulty.	Perform concentrator shutdown test (paragraph 9-35).
	Pressure reducer (REG1) adjusted incorrectly.	Adjust setscrew on reducer assembly for 25 ± 1 psig. Refer to figure 9-4. (turn setscrew clockwise to increase pressure) (turn setscrew counterclockwise to decrease pressure)
	Leakage.	Perform leakage test (paragraph 9-32).

Table 9-8. Troubleshooting (Pressure Reducer Test) Using Test Set Controller/Monitor (Cont)

TROUBLE	PROBABLE CAUSE	REMEDY
9-41. Step 5 UUT Reg Press (TP1) indication greater than 30.	Inlet pressure high. Pressure reducer (REG1) adjusted incorrectly.	Ensure UUT Inlet Press is 35 ±1 psig. Adjust setscrew on reducer assembly for 25 ±1 psig. Refer to figure 9-4. (turn setscrew clockwise to increase pressure) (turn setscrew counterclockwise to decrease pressure)
9-41. Step 7 UUT Reg Press (TP1) indication less than 16.	Inlet pressure low. Filter (FLTR1) clogged. Shutoff valve (V1) faulty. Leakage.	Ensure UUT Inlet Press is 25 +0, -1 psig. Replace faulty filter (FLTR1) (paragraph 9-84). Perform concentrator shutdown test (paragraph 9-35). Perform leakage test (paragraph 9-32).
9-41. Step 7 UUT Reg Press (TP1) indication greater than 26.	Inlet pressure high.	Ensure UUT Inlet Press is 25 +0, -1 psig.

Table 9-9. Troubleshooting (Outlet Gas Performance Test) Using Test Set Controller/Monitor

TROUBLE	PROBABLE CAUSE	REMEDY
9-38. Step 3 Failed indication is displayed.	See below.	Isolate by performing outlet gas performance test (paragraph 9-42).
9-42. Step 6 No pressure cycles (high to low flow) at output of concentrator.	Faulty controller/monitor assembly. Slide valve assembly (V2).	Isolate by performing steps below.

1. Set test set switch S2 to the OFF position. Disconnect (P1) of test set cable P/N 3309142-1 from controller/monitor assembly. Connect multimeter set to measure 28 VDC between pins (D) (+) and (C) (-). Set test set switch S2 to the UUT POWER ON position and measure 28VDC.
   a. If voltage is not present, return test set for maintenance.
   b. If voltage is present, proceed to step 2.
2. Set test set switch S2 to the OFF position. Disconnect multimeter from between pins (D) (+) and (C) (-). Set test set switch S2 to the TS MONITOR ON position, proceed to step 3.
3. Disconnect labeled plastic tubing V2 from both sides of slide valve assembly tube fittings and check for pressure from end of one labeled plastic tubing; and during operation of controller/monitor assembly, ensure that pressure is cycling alternately between labeled plastic tubings V2.
   a. If pressure is not present or is not cycling from labeled plastic tubings V2 on slide valve, return test set for maintenance.
   b. If pressure is present and is cycling from labeled plastic tubings V2, then remove slide valve assembly (V2) (paragraph 9-60) and install new slide valve assembly (V2) (paragraph 9-72).

Table 9-9. Troubleshooting (Outlet Gas Performance Test) Using Test Set Controller/Monitor (Cont)

TROUBLE	PROBABLE CAUSE	REMEDY
9-42. Step 7 Oxygen outlet pressure is less than 20 psig.	Inlet pressure low. Pressure reducer (REG1). Oxygen sieve beds (BED 1 O_2 and BED 2 O_2).	Isolate by performing steps below.
1. If UUT Inlet Press pressure is low, then check for low facility air pressure or adjust UUT Inlet Press for 35 ±1 psig pressure and continue bench test. 2. If UUT Reg Press (TP1) pressure is low, then perform pressure reducer test (paragraph 9-33). 3. If UUT Reg Press (TP1) pressure is within limits, then remove faulty oxygen bed assemblies (right and left) (paragraph 9-61), replace oxygen bed assemblies (right and left) (paragraph 9-71) as a set, and perform bench test.		
9-42. Step 8 Oxygen outlet O_2 concentration percentage not within limits.	Inlet pressure low. Outlet flow rate adjustment. Check valves (CV1 and CV2). Sieve beds.	Isolate by performing steps below.
1. Check inlet pressure, then adjust as required and continue bench test. 2. Check outlet flow rates, then adjust as required and continue bench test. 3. Observe test set display for low O_2 percentage; if O_2 outlet oxygen concentration percentage is low, then perform the following steps: a. Remove faulty check valves (CV1 and CV2) (paragraph 9-50), install check valves (CV1 and CV2) (paragraph 9-82), and perform bench test. b. Remove faulty oxygen bed assemblies (right and left) (paragraph 9-61), replace oxygen bed assemblies (right and left) (paragraph 9-71) as a set, and perform bench test.		
9-42. Step 9 Nitrogen outlet O_2 concentration percentages not within limits.	Inlet pressure low. Outlet flow rate adjustment. Check valves (CV3 and CV4). Sieve beds.	Isolate by performing steps below.
1. Check inlet pressure, then adjust as required and continue bench test. 2. Check outlet flow rates, then adjust as required and continue bench test. 3. Observe test set display for low N_2 percentages, if N_2 outlet oxygen concentration percentages is low, then perform the following steps: a. Remove faulty check valves (CV3 and CV4) (paragraph 9-51), install check valves (CV3 and CV4) (paragraph 9-81), and perform bench test. b. Remove faulty nitrogen bed assemblies (right and left) (paragraph 9-61), replace nitrogen bed assemblies (right and left) (paragraph 9-71) as a set, and perform bench test.		
9-42. Step 10 Nitrogen outlet flow is less than expected rate.	Outlet flow rate adjustment. Check valve (CV5). Check valves (CV3 through CV4).	Isolate by performing steps below.
1. Check outlet flow rate, then adjust flow rate as required and continue bench test. 2. Observe test set NITROGEN OUTLET flow display for low nitrogen flow, if flow is low, perform the following: a. Remove faulty check valve (CV5) (paragraph 9-51), replace check valve (CV5) (paragraph 9-81), and perform bench test.		

Table 9-9. Troubleshooting (Outlet Gas Performance Test) using Test Set Controller/Monitor (Cont)

TROUBLE	PROBABLE CAUSE	REMEDY
b. Remove faulty check valves (CV3 and CV4) (paragraph 9-51), install check valves (CV3 and CV4) (paragraph 9-81), and perform bench test.		
9-42. Step 12 Oxygen concentration less than 83%.	Outlet flow rate adjustment. Check valves (CV1 and CV2). Sieve beds.	Isolate by performing steps below.
1. Check outlet flow rates and adjust as required. 2. Observe test set display for low O_2 percentage; if O_2 outlet oxygen concentration percentage is less than 83%, then perform the following steps: a. Remove faulty check valves (CV1 and CV2) (paragraph 9-50), install new check valves (CV1 and CV2) (paragraph 9-82), and perform bench test. b. Remove faulty oxygen bed assemblies (right and left) (paragraph 9-61), replace oxygen bed assemblies (right and left) (paragraph 9-71) as a set, and perform bench test.		

Table 9-10. Troubleshooting (Concentrator Shutdown Test) using Test Set Controller/Monitor

TROUBLE	PROBABLE CAUSE	REMEDY
9-38. Step 3 Failed indication is displayed.	See below.	Isolate by performing concentrator shutdown test (paragraph 9-43).
9-43. Step 7 Pressure indication does not go to less than 2 psig when test set UUT POWER ON/OFF (S2) switch is turned off.	Shutoff valve (V1). Controller/monitor assembly.	Isolate by performing steps below.
1. Observe UUT Reg Press (TP1) pressure, then remove labeled plastic tubing V1 from back of controller/monitor assembly at tube retainer disc assembly: a. If pressure is not present, return test set for maintenance. b. If pressure is present, then remove shutoff/filter/regulator assembly (paragraph 9-53), disassemble shutoff valve/filter assembly (V1) (paragraph 9-54), replace faulty parts, reassemble shutoff valve/filter assembly (V1) (paragraph 9-77), install shutoff/filter/regulator assembly (paragraph 9-79), and perform bench test.		
9-43. Step 8 No pressure cycles (high to low flow) at output of concentrator	Controller/monitor assembly. Slide valve assembly (V2).	Isolate by performing steps below.
1. Set test set switch S2 to the OFF position. Disconnect (P1) of test set cable P/N 3309142-1 from controller/monitor assembly. Connect multimeter set to measure 28 VDC between pins (D) (+) and (C) (-). Set test set switch S2 to the UUT POWER ON position and measure 28VDC. a. If voltage is not present, return test set for maintenance. b. If voltage is present, proceed to step 2. 2. Set test set switch S2 to the OFF position.. Disconnect multimeter from between pins (D) (+) and (C) (-). Set test set switch S2 to the TS MONITOR ON position, proceed to step 3. 3. Disconnect labeled plastic tubing V2 from both sides of slide valve assembly tube fittings and check for pressure from end of one labeled plastic tubing; and during operation of controller/monitor assembly, ensure that pressure is cycling alternately between labeled plastic tubings V2.		

Table 9-10. Troubleshooting (Concentrator Shutdown Test) using Test Set Controller/Monitor (Cont)

TROUBLE	PROBABLE CAUSE	REMEDY
a. If pressure is not present or is not cycling from labeled plastic tubings V2 on slide valve, return test set for maintenance. b. If pressure is present and is cycling from labeled plastic tubings V2, then remove slide valve assembly (V2) (paragraph 9-60), install new slide valve assembly (V2) (paragraph 9-72), and perform bench test.		
9-43. Step 9 Pressure indication does not go to zero on proper ARINC command.	Shutoff valve (V1). Controller/monitor assembly.	Isolate by performing steps below.
1. Observe UUT Reg Press (TP1) pressure, then remove labeled plastic tubing V1 from back of controller/monitor assembly at tube retainer disc assembly: a. If pressure is not present, return test set for maintenance. b. If pressure does not go to zero, then remove shutoff/filter/regulator assembly (paragraph 9-53), disassemble shutoff valve/filter assembly (V1) (paragraph 9-54), replace faulty parts, reassembly shutoff valve/filter assembly (V1) (paragraph 9-77), install shutoff/filter/regulator assembly (paragraph 9-79), and perform bench test.		

Table 9-11. Troubleshooting (ARINC Functional Test) using Test Set Controller/Monitor

TROUBLE	PROBABLE CAUSE	REMEDY
9-38. Step 3 Failed indication is displayed.	See below.	Isolate by performing ARINC functional test (paragraph 9-44).
9-44. Step 7 ARINC and concentrator readings do not agree.	Controller/monitor assembly.	Isolate by performing steps below.
1. If ARINC and concentrator readings do not agree return test set for maintenance.		
9-44. Step 9 Discrete warning light did not go off within 3 minutes.	Controller/monitor assembly.	Isolate by performing steps below.
1. If discrete warning light did not go off within 3 minutes: a. And test set UUT Oxygen Concentration indication is within limits, then return test set for maintenance. b. And test set UUT Oxygen Concentration indication is not within limits, then proceed to troubleshooting table 9-9.		
9-44. Step 9 ARINC indicates failure(s).	Controller/monitor assembly. PSA assembly.	Isolate by performing steps below.
1. If failure(s) are indicated by the ARINC after 3 minutes and all instrumentation is “OK”, return test set for maintenance. 2. If fault is still present, then proceed to troubleshooting table 9-9 and 9-10 for possible corrective action on the PSA assembly.		
9-44. Step 11 I-BIT not complete or ARINC indicates failure(s).	Controller/monitor assembly.	Isolate by performing steps below.
1. If I-BIT does not complete after 30 seconds, return test set for maintenance.		

Table 9-11. Troubleshooting (ARINC Functional Test) using Test Set Controller/Monitor (Cont)

TROUBLE	PROBABLE CAUSE	REMEDY
2. If fault is still present, then proceed to troubleshooting table 9-9 and 9-10 for possible corrective action on the PSA assembly.		
9-44. Step 13 M-BIT not complete or ARINC indicates failure(s).	Controller/monitor assembly.	Isolate by performing steps below.
1. If M-BIT does not complete after 5 minutes and 30 seconds, return test set for maintenance. 2. If fault is still present, then proceed to troubleshooting table 9-9 and 9-10 for possible corrective action on the PSA assembly.		
9-44. Step 15 STATUS WORD 2 box does not display [1] - 21 Low O_2 Press or OXYGEN OUTLET Pressure not between 19 and 23 psia.	Controller/monitor assembly.	Isolate by performing steps below.
1. STATUS WORD 2 box does not display [1] - 21 Low O_2 Press or OXYGEN OUTLET Pressure not between 19 and 23 psia, return test set for maintenance. 2. If fault is still present, then proceed to troubleshooting table 9-9 and 9-10 for possible corrective action on the PSA assembly.		

9-47. DISASSEMBLY.

9-48. Disassemble concentrator using index numbers assigned to figure referred to unless otherwise noted. Disassemble concentrator only as far as required to correct any malfunction.

WARNING

When working with oxygen equipment, make certain that clothing, tubing, fittings, and equipment are free of oil, grease, fuel, hydraulic fluid, or any combustible liquid. Oil or any material containing oil, even in minute quantity, in conjunction with high purity oxygen under pressure can cause explosion or fire. Dust, lint, and fine metal particles are also dangerous.

CAUTION

All disassembly, inspection, repair, and assembly must be done on clean benches having good lighting and in an area provided with air conditioning or air filtering. Walls, floor, and ceiling should have a smooth finish and be painted with nonchalking paint which can be kept clean and dust free.

NOTE

It is desirable to keep all parts for each individual component separated. Make careful note of location and quantity of all parts. Plastic, partitioned boxes with covers or similar storage should be used to keep the parts segregated and protected from dirt and moisture. Plastic bags are also useful for storing subassemblies and component parts after cleaning and inspection until ready for assembly.

The concentrator shall be in upright position for disassembly purposes. Upright position is defined as the concentrator assembly resting on a flat surface, with bottom side down. Nitrogen beds and accumulator are toward the bottom of the assembly. Facing the output end, the controller/monitor assembly is found on the left side of output end. Oxygen Bed No. 1 is on top right side and nitrogen Bed No. 1 is on bottom right. Oxygen Bed No. 2 (top) and nitrogen Bed No. 2 (bottom) are on the left side. Front of unit is to the right of the output end, facing the side of the right-hand beds.

All preformed packings removed during removal and disassembly procedures shall be discarded. Replace with new preformed packing during assembly and installation procedures.

9-49. CONTROLLER/MONITOR ASSEMBLY REMOVAL. To remove the controller/monitor assembly (1, figure 9-10), proceed as follows:

Materials Required

Quantity	Description	Reference Number
As Required	Plastic Bag	MIL-B-117
As Required	Rubber Band	ZZ-A-1415
As Required	Protective Cap Plug	NAS837-24
As Required	Duct Tape	A-A-2231

NOTE

Index numbers refer to figure 9-10 unless otherwise specified.

1. Ensure concentrator is placed on a flat bench surface with bottom side down, then work from output end.

2. Remove socket head capscrew (3), flat washer (4), and lockwasher (5). Move grounding strap assembly (6), and replace socket head capscrew (3), lockwasher (5), and flat washer (4).

3. Remove tube fitting disc assembly (7) from back of the controller/monitor assembly (1) by loosening captive screw (8) to move tube fitting disc assembly (7) away from controller/monitor assembly (1), then pull tube fitting disc assembly (7) back as necessary to disconnect from controller/monitor assembly (1). Place plastic bag over tube fitting disc assembly (7). Secure it with a rubber band.

4. Place protective cap plug over the tube fitting disc assembly (7) opening on back of the controller/monitor assembly (1) and secure with tape.

5. Rotate concentrator counterclockwise and place on its side. Loosen four front-accessible captive socket head mounting screws (9) until socket head mounting screws (9) disengage from bed outlet structure assembly (11).

CAUTION

Loosening of captive socket head mounting screw (10) on back of bed outlet structure assembly (11) will cause the controller/monitor assembly (1) to become free. Controller/monitor assembly (1) will need to be supported during removal.

6. Rotate concentrator clockwise to lay it flat on the surface. Loosen remaining captive socket head mounting screw (10) from back of the bed outlet structure assembly (11) near top of controller/monitor assembly (1) until socket head mounting screw (10) disengages from bed outlet structure assembly (11).

9-50. OXYGEN CHECK VALVES (CV1 AND CV2) REMOVAL. To remove the oxygen check valves, proceed as follows:

Materials Required

Quantity	Description	Reference Number
As Required	Protective Cap Plugs	NAS834-53

NOTE

Index numbers refer to figure 9-11 unless otherwise noted.

1. Ensure concentrator is placed on a flat bench surface with bottom side down, then work from output end.

2. Remove controller/monitor assembly, refer to Controller/Monitor Assembly Removal (paragraph 9-49).

3. Loosen coupling nut (19) on the left oxygen tube (18) and coupling nut (26) on the right oxygen tube (25) at plenum assembly (ACC1) (2) FLTR3 and FLTR4 inlets.

4. Remove four socket head capscrews (22), lockwashers (23), and flat washers (24) from the left outlet fitting (32) of left oxygen bed assembly (6).

CAUTION

Removal of the outlet fitting (32) from the left oxygen bed assembly (6) will cause check valve (CV1) (41) to become free. Check valve (CV1) (41) may fall out during this operation.

5. Remove the left oxygen tube (18) and outlet fitting (32) from the left oxygen bed assembly (6), then remove check valve (CV1) (41) with preformed packing (42).

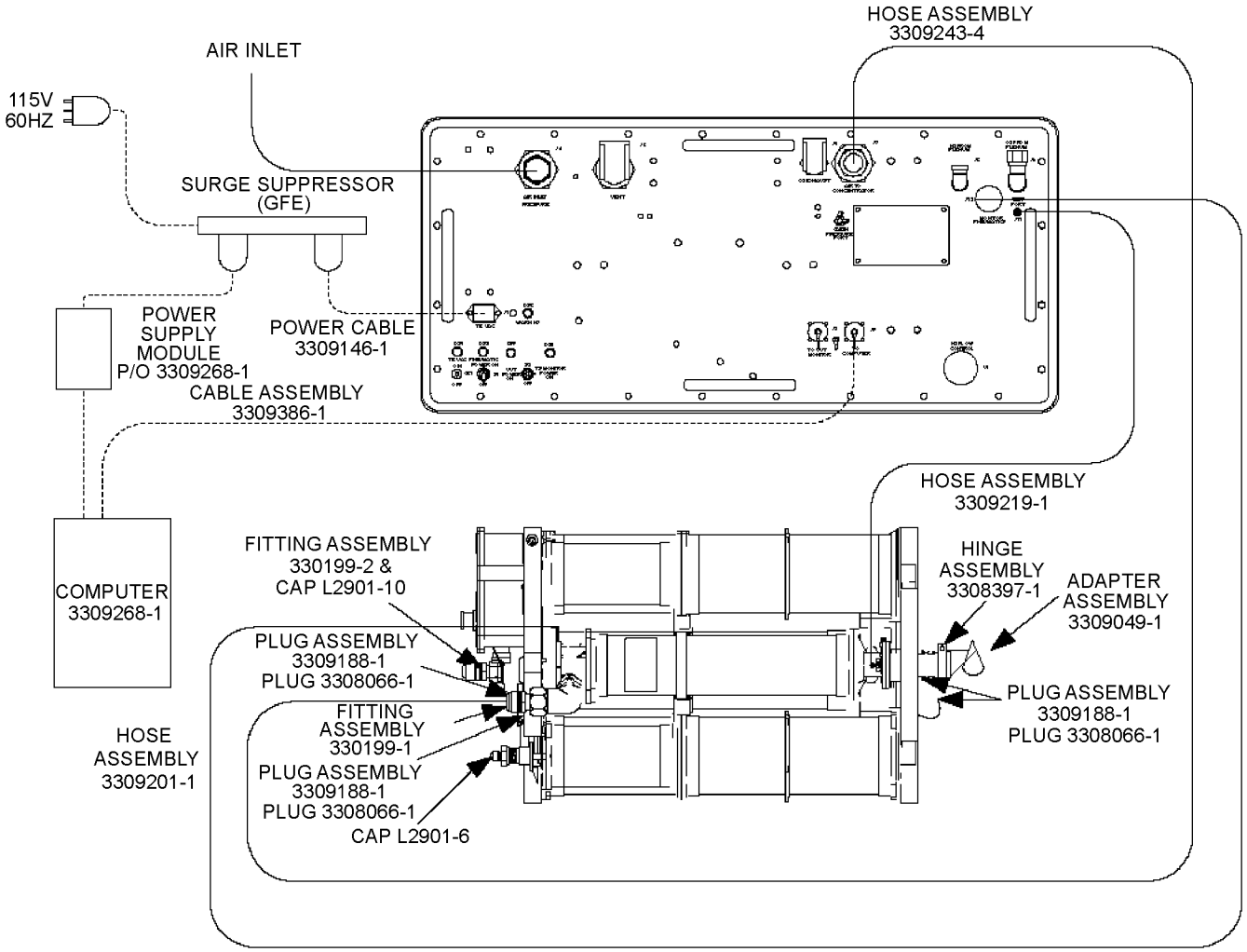

009009

Figure 9-9. O_2N_2 Concentrator Performance Test Setup Using Test Set Controller/Monitor Only (Leakage Test)

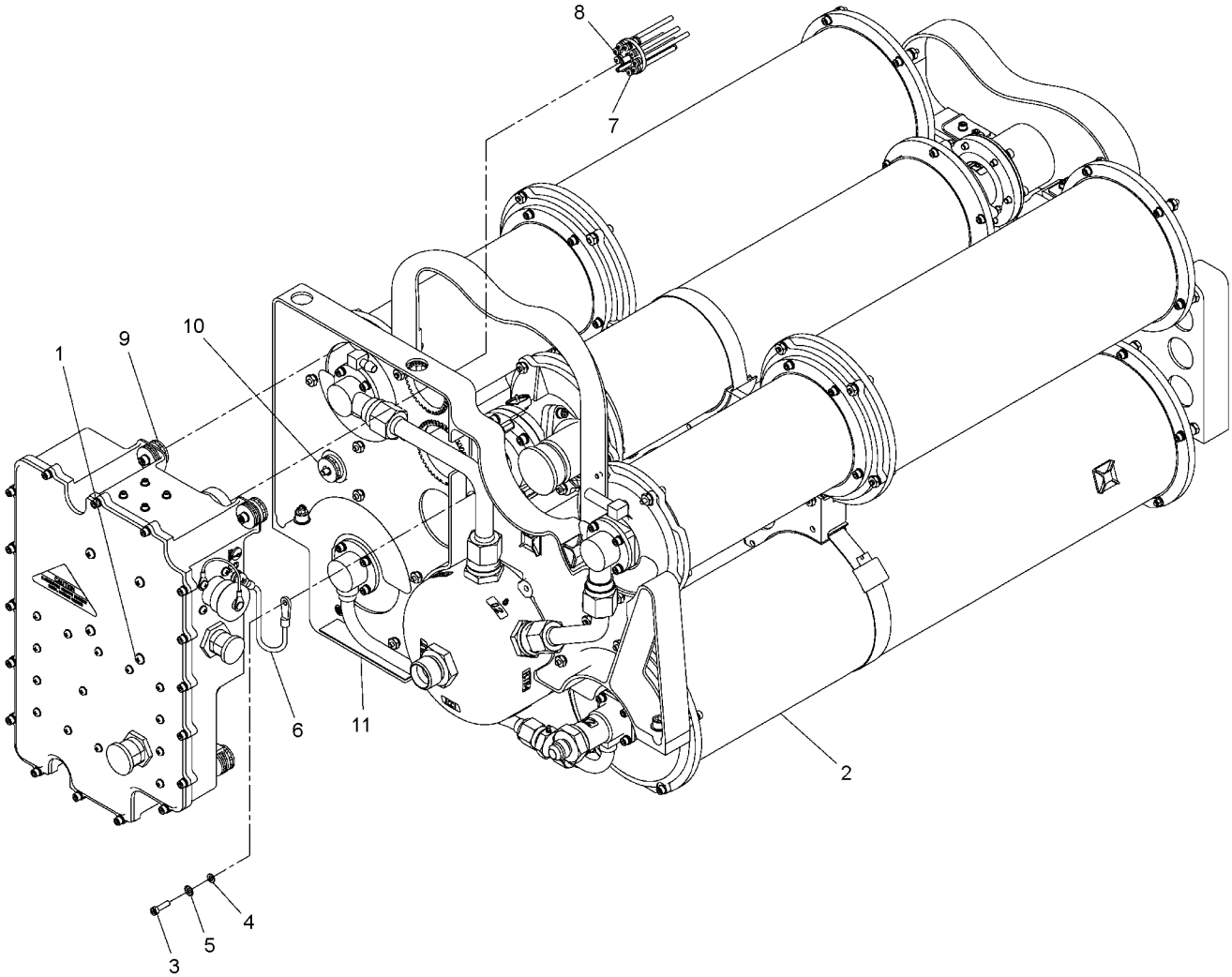

1. CONTROLLER/MONITOR ASSEMBLY
2. PSA (PRESSURE SWING ADSORPTION) ASSEMBLY
3. SOCKET HEAD CAPSCREW
4. FLAT WASHER
5. LOCKWASHER
6. GROUNDING STRAP ASSEMBLY
7. TUBE FITTINGS DISC ASSEMBLY
8. CAPTIVE SCREW
9. CAPTIVE SOCKET HEAD MOUNTING SCREW (4)
10. CAPTIVE SOCKET HEAD MOUNTING SCREW (1)
11. BED OUTLET STRUCTURE ASSEMBLY

009010

Figure 9-10. O_2N_2 Concentrator, Type GGU-xx/A (Product Output End) Removal/Assembly

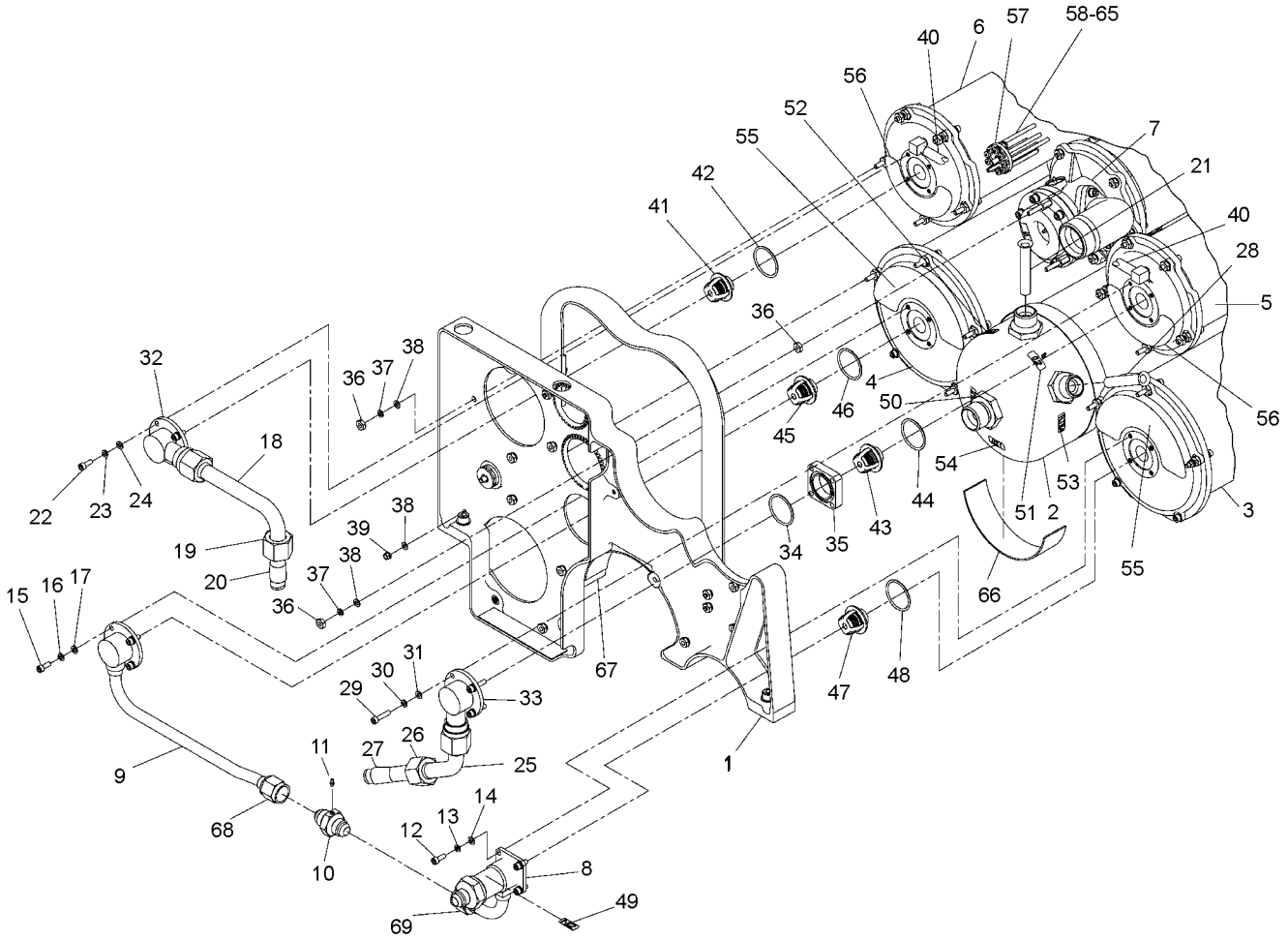

1. BED OUTLET STRUCTURE ASSY
2. PLENUM ASSEMBLY (ACC1)
3. NITROGEN BED ASSEMBLY (RIGHT)
4. NITROGEN BED ASSEMBLY (LEFT)
5. OXYGEN BED ASSEMBLY (RIGHT)
6. OXYGEN BED ASSEMBLY (LEFT)
7. SHUTOFF/FILTER/REGULATOR
8. CHECK VALVE ASSEMBLY (CV5)
9. COVER AND TUBE
10. TAPPED NIPPLE
11. TUBE FITTING
12. SOCKET HEAD CAPSCREW
13. LOCKWASHER
14. FLAT WASHER
15. SOCKET HEAD CAPSCREW
16. LOCKWASHER
17. FLAT WASHER
18. OXYGEN TUBE (LEFT)
19. FLARELESS SLEEVE COUPLING NUT
20. FLARELESS SLEEVE COUPLING
21. FLARELESS FILTER ELEMENT
22. SOCKET HEAD CAPSCREW
23. LOCKWASHER
24. FLAT WASHER
25. OXYGEN TUBE (RIGHT)
26. FLARELESS SLEEVE COUPLING NUT
27. FLARELESS SLEEVE COUPLING
28. FLARELESS FILTER ELEMENT
29. SOCKET HEAD CAPSCREW
30. LOCKWASHER
31. FLAT WASHER
32. OUTLET FITTING
33. OUTLET FITTING
34. PREFORMED PACKING
35. SPACER
36. PLAIN HEX NUT
37. LOCKWASHER
38. FLAT WASHER
39. SELF-LOCKING NUT
40. PLASTIC TUBING
41. CHECK VALVE (CV1)
42. PREFORMED PACKING
43. CHECK VALVE (CV2)
44. PREFORMED PACKING
45. CHECK VALVE (CV3)
46. PREFORMED PACKING
47. CHECK VALVE (CV4)
48. PREFORMED PACKING
49. IDENTIFICATION MARKER N_2
50. IDENTIFICATION MARKER O_2 OUT
51. IDENTIFICATION MARKER O_2
52. IDENTIFICATION MARKER FTLR3
53. IDENTIFICATION MARKER FLTR4
54. IDENTIFICATION MARKER ACC1
55. IDENTIFICATION MARKER WARNING
56. IDENTIFICATION MARKER WARNING
57. DISC ASSEMBLY
58. LABELED PLASTIC TUBING IN
59. LABELED PLASTIC TUBING N_2
60. LABELED PLASTIC TUBING O_2
61. LABELED PLASTIC TUBING V1
62. LABELED PLASTIC TUBING V2
63. LABELED PLASTIC TUBING V2
64. LABELED PLASTIC TUBING REG
65. LABELED PLASTIC TUBING EXH
66. DAMPING PAD
67. PLENUM RETAINER FLANGE
68. COUPLING NUT
69. COUPLING NUT

009011

Figure 9-11. O_2N_2 Concentrator, TYPE GGU-xx/A Removal/Assembly (Product Output End)

6. Remove four socket head capscrews (29), lockwashers (30), and flat washers (31) from the right outlet fitting (33) of right oxygen bed assembly (5).

CAUTION

Removal of the outlet fitting (33) and spacer (35) from the right oxygen bed assembly (5) will cause check valve (CV2) (43) to become free. Check valve (CV2) (43) may fall out during this operation.

7. Remove right oxygen tube (25), outlet fitting (33) with spacer (35), and preformed packing (34) from the right oxygen bed assembly (5), then remove check valve (CV2) (43) with preformed packing (44).

8. Place protective cap plugs (NAS834-53) in the oxygen bed (5 and 6) outlets.

9-51. NITROGEN CHECK VALVES (CV3, CV4 AND CV5) REMOVAL. To remove nitrogen check valves (CV3, CV4, and CV5), proceed as follows:

Materials Required

Quantity	Description	Reference Number
As Required	Protective Cap Plugs	NAS834-53

NOTE

Index numbers refer to figure 9-11 unless otherwise noted.

1. Ensure PSA assembly is placed on a flat bench surface with bottom side down, then work from output end.

2. Remove controller/monitor assembly, refer to Controller/Monitor Assembly Removal (paragraph 9-49).

CAUTION

When loosening coupling nut (68) on cover and tube (9) and coupling nut (69) on check valve assembly (CV5) (8) connected to tapped nipple (10), be careful not to damage tube fitting (11) on tapped nipple (10).

3. Loosen coupling nut (68) on cover and tube (9) and coupling nut (69) on check valve assembly (CV5) (8) connected to tapped nipple (10) below plenum assembly (ACC1) (2).

4. Remove four socket head capscrews (15), lockwashers (16), and flat washers (17) from the cover and tube (9) of the left nitrogen bed assembly (4).

5. Remove four socket head capscrews (12), lockwashers (13), and flat washers (14) from check valve assembly (CV5) (8) of the right nitrogen bed assembly (3).

CAUTION

Removal of cover and tube (9) from left nitrogen bed assembly (4) will cause check valve (CV3) (45) to become free. Check valve (CV3) (45) may fall out during this operation.

6. Remove cover and tube (9), then remove check valve (CV3) (45) with preformed packing (46).

CAUTION

Removal of check valve assembly (CV5) (8) from right nitrogen bed assembly (3) will cause check valve (CV4) (47) to become free. Check valve (CV4) (47) may fall out during this operation.

7. Remove check valve assembly (CV5) (8), then remove check valves (CV4) (47) with preformed packing (48).

8. Place protective cap plugs (NAS834-53) in the nitrogen bed (3 and 4) outlets.

9-52. PLENUM ASSEMBLY (ACC1) REMOVAL. To remove plenum assembly (ACC1), proceed as follows:

Materials Required

Quantity	Description	Reference Number
As Required	Protective Cap Plug	NAS844-2
As Required	Protective Cap Plug	NAS834-72

NOTE

Index numbers refer to figure 9-11 unless otherwise specified.

1. Ensure PSA assembly is placed on a flat bench surface with bottom side down, then work from output end.

2. Remove controller/monitor assembly, refer to Controller/Monitor Assembly Removal (paragraph 9-49).

3. Remove oxygen check valves (CV1 and CV2), refer to Oxygen Check Valves (CV1 and CV2) Removal (paragraph 9-50).

4. Place protective cap plugs (NAS834-72) on the plenum assembly (ACC1) FLTR3 and FLTR4 inlets.

5. Remove nitrogen check valves (CV3 and CV4), refer to Nitrogen Check Valves (CV3, CV4 and CV5) Removal (paragraph 9-51).

WARNING

Because nonmetallic tubing and plenum assembly (ACC1) (2) are in the oxygen flow path, openings must be sealed to maintain oxygen clean requirement when tubing is disconnected.

6. Remove labeled plastic tubing O_2 (60) from oxygen output port labeled with identification marker O_2 (51) on plenum assembly (ACC1) (2) and place protective cap plug (NAS844-2) on the oxygen output port.

7. Place PSA assembly (2, figure 9-10) on its side for access to the support stud on the closed end of plenum assembly (ACC1) (1, figure 9-12) and clamping screws on the band clamps (7, figure 9-13).

8. Remove plain hex nut (8, figure 9-12), lockwasher (9, figure 9-12), and flat washer (10, figure 9-12) securing the support stud on the closed end of plenum assembly (ACC1) (1, figure 9-12) to plenum mount bracket (47, figure 9-12).

9. Loosen clamping screw on band clamps (7, figure 9-13) near the center and outlet end of plenum assembly (ACC1) (2, figure 9-13). The band clamps (7, figure 9-13) should be loose enough to slide freely over the plenum assembly (ACC1) (2, figure 9-13).

10. Slowly pull plenum assembly (ACC1) (2, figure 9-13) with damping pad (66) toward output end and out of the PSA assembly. If clamps (7, figure 9-13) bind, wiggle them into a nonbinding position or loosen them further to allow the tube to slide freely through the clamps.

11. If necessary, peel off sticky-backed damping pad (66) from plenum assembly (ACC1) (2).

9-53. SHUTOFF VALVE/FILTER/REGULATOR (REDUCER) ASSEMBLIES (V1/FLTR1/REG1) REMOVAL. To remove the shutoff valve/filter/regulator assemblies (V1/FLTR1/REG1), proceed as follows:

NOTE

Index numbers refer to figure 9-11 unless otherwise specified.

1. Ensure PSA assembly is placed on a flat bench surface with bottom side down, then work from output end.

2. Remove two nuts (36), lockwashers (37), and flat washers (38) holding shutoff valve/filter/regulator assembly (7) to the bed outlet structure assembly (1).

3. Open the band clamp (9, figure 9-13) holding the shutoff valve/filter/regulator assembly (7) to the center structure assembly (5, figure 9-13). The band clamp (9, figure 9-13) should be loose enough to slide freely over the shutoff valve/filter/regulator assembly (7).

4. Remove two socket head capscrews (11, figure 9-12), lockwashers (12, figure 9-12), and flat washers (13, figure 9-12) holding the shutoff valve/filter/regulator assembly (6, figure 9-12) to the slide valve assembly (16, figure 9-12).

5. Lift the outlet end of the shutoff valve/filter/regulator assembly (6, figure 9-12) up and remove preformed packing (14, figure 9-12), then slide shutoff valve/filter/regulator assembly (7) back to clear the jack studs (9, figure 9-14) on inlet end of the shutoff valve/filter/regulator assembly (7).

6. Remove labeled plastic tubing V1 (61) from the tube fitting (13, figure 9-15) at the port labeled with identification marker V1 (17, figure 9-15) on the output end of the shutoff valve/filter/regulator assembly (7), then remove IN tubing (58) from tube fitting (14, figure 9-15).

7. Remove labeled plastic tubing DRAIN (40, figure 9-12) from the tube fitting (12, figure 9-14) on the bottom of the shutoff valve/filter/regulator assembly.

8. Seal off the slide valve assembly (16, figure 9-12) inlet hole with tape or a protective plug.

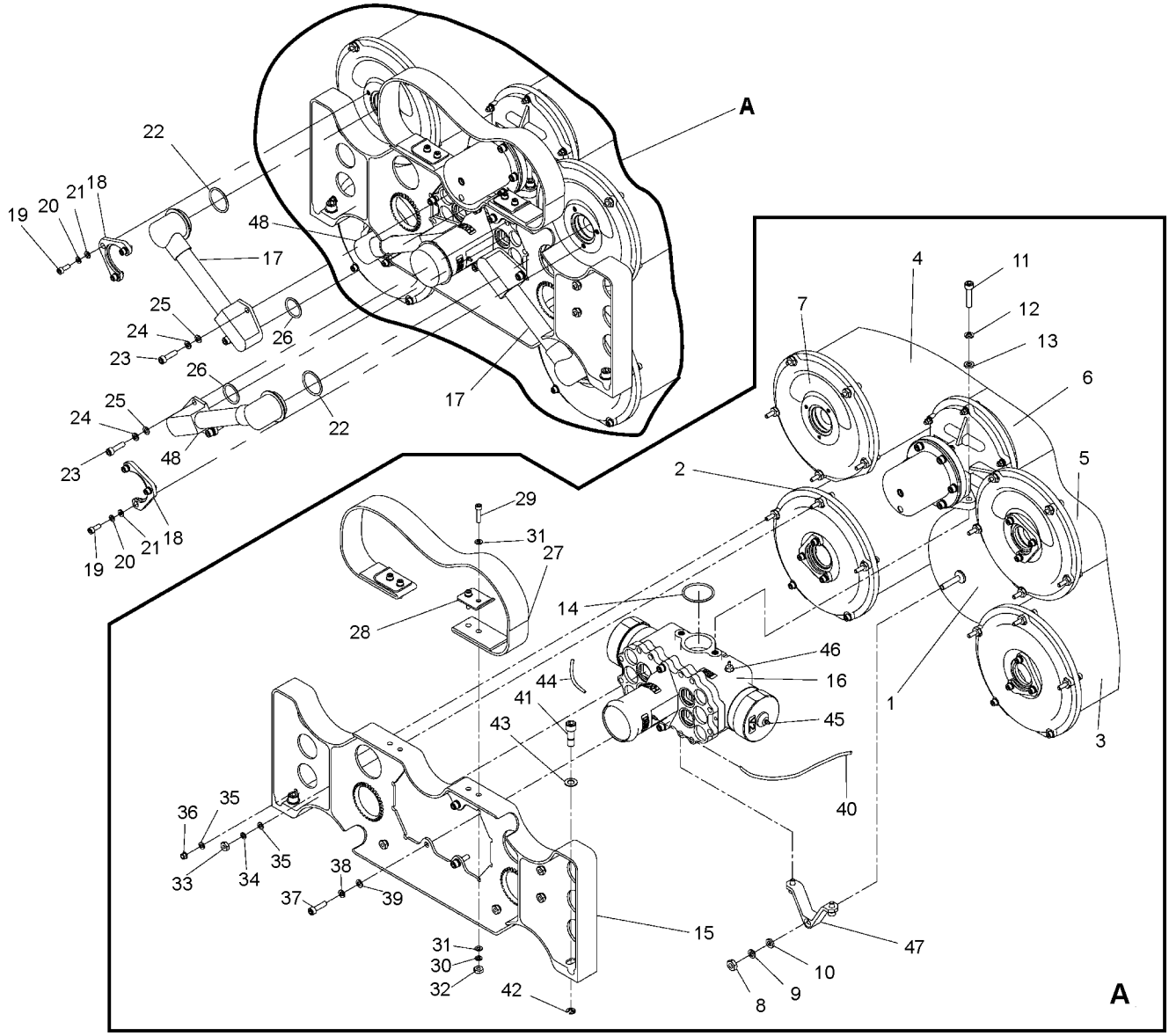

1. PLENUM ASSEMBLY (ACC1)
2. NITROGEN BED ASSEMBLY (RIGHT)
3. NITROGEN BED ASSEMBLY (LEFT)
4. OXYGEN BED ASSEMBLY (RIGHT)
5. OXYGEN BED ASSEMBLY (LEFT)
6. SHUTOFF/FILTER/REGULATOR
7. IDENTIFICATION MARKER WARNING
8. PLAIN HEX NUT (3/8″)
9. LOCKWASHER
10. FLAT WASHER
11. SOCKET HEAD CAPSCREW
12. LOCKWASHER
13. FLAT WASHER
14. PREFORMED PACKING
15. BED INLET STRUCTURE ASSEMBLY
16. SLIDE VALVE ASSEMBLY
17. ELBOW AND TUBE ASSEMBLY
18. ELBOW RETAINER
19. SOCKET HEAD CAPSCREW
20. LOCKWASHER
21. FLAT WASHER
22. PREFORMED PACKING
23. SOCKET HEAD CAPSCREW
24. LOCKWASHER
25. FLAT WASHER
26. PREFORMED PACKING
27. LIFTING STRAP
28. STRAP PLATE
29. SOCKET HEAD CAPSCREW
30. LOCKWASHER
31. FLAT WASHER
32. PLAIN HEX NUT
33. PLAIN HEX NUT
34. LOCKWASHER
35. FLAT WASHER
36. SELF-LOCKING NUT
37. SOCKET HEAD CAPSCREW
38. LOCKWASHER
39. FLAT WASHER
40. LABELED PLASTIC TUBING DRAIN
41. CAPTIVE SCREW
42. EXTERNAL RETAINING RING
43. FLAT WASHER
44. LABELED PLASTIC TUBING EXH
45. V2 PORT (2)
46. REG PORT
47. PLENUM MOUNT BRACKET
48. ELBOW AND TUBE ASSEMBLY

009012

Figure 9-12. O_2N_2 Concentrator, TYPE GGU-xx/A Removal/Assembly (Exhaust End)

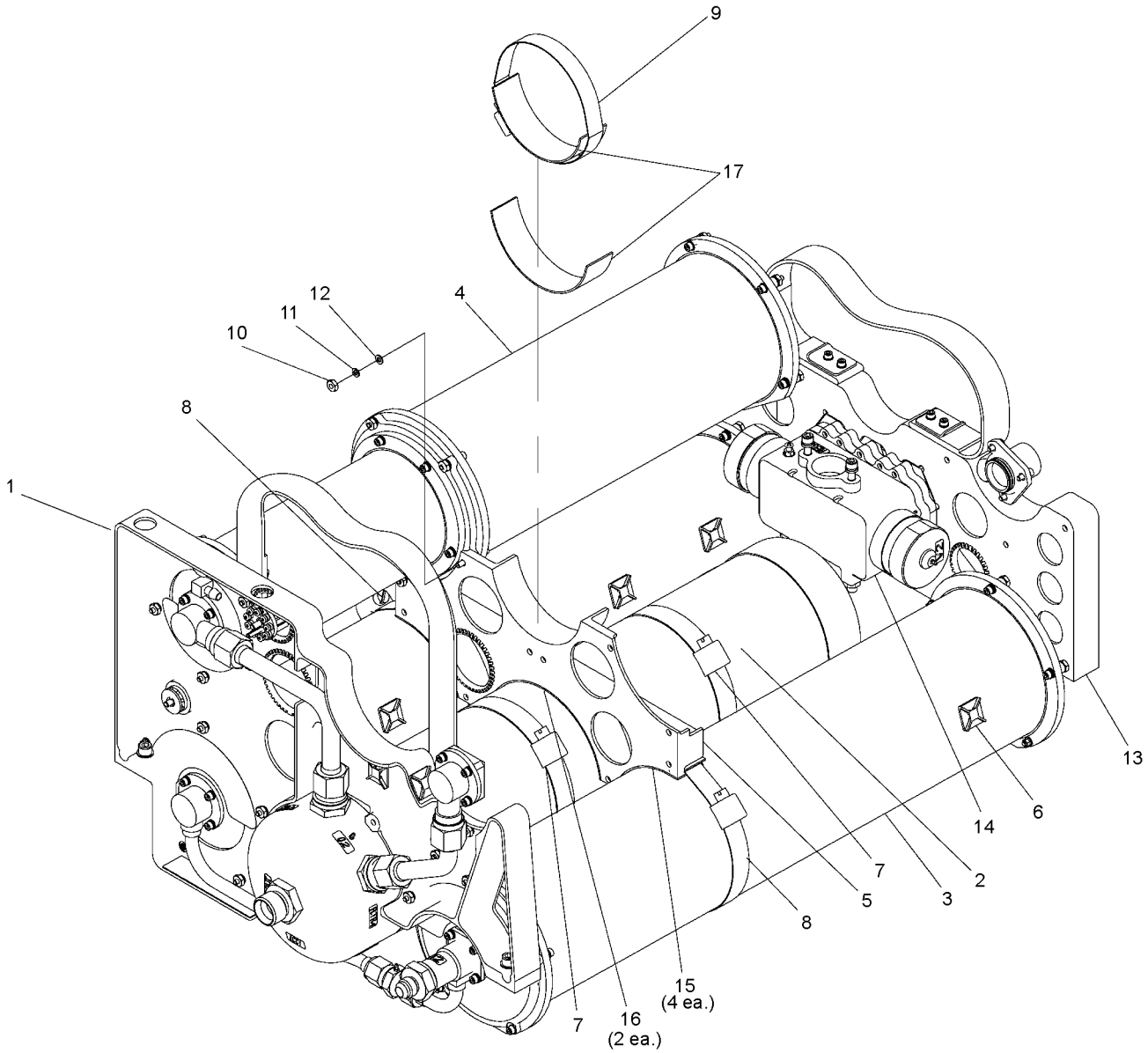

1. BED OUTLET STRUCTURE ASSEMBLY
2. PLENUM ASSEMBLY
3. NITROGEN BED ASSEMBLY (RIGHT)
4. OXYGEN BED ASSEMBLY (LEFT)
5. CENTER STRUCTURE ASSEMBLY
6. ELECTRICAL TIEDOWN CLEAT
7. BAND CLAMP (PLENUM ASSEMBLY)
8. BAND CLAMP (N_2 BED ASSEMBLY)
9. BAND CLAMP (SHUTOFF/FILTER/REGULATOR ASSEMBLY)
10. PLAIN HEX NUT
11. LOCKWASHER
12. FLAT WASHER
13. BED INLET STRUCTURE ASSEMBLY
14. SLIDE VALVE ASSEMBLY
15. DAMPING PAD (3.5″) 4 EACH
16. DAMPING PAD (6.5″) 2 EACH
17. DAMPING PAD (5.5″) 2 EACH

009013

Figure 9-13. O_2N_2 Concentrator, TYPE GGU-xx/A Removal/Assembly (Center Section, with Shutoff Valve/Filter/Regulator and Right O_2 Bed Removed)

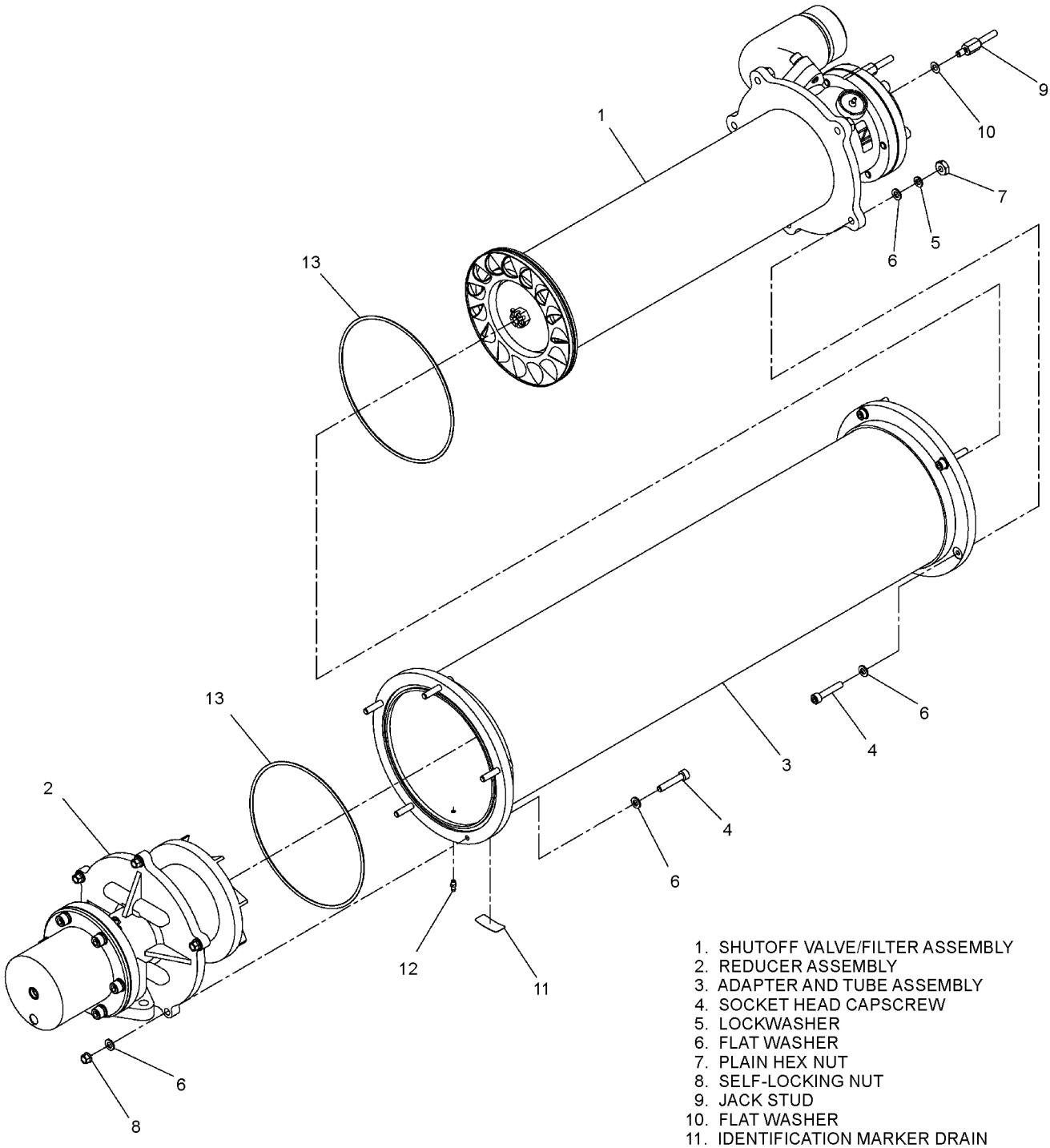

009014

Figure 9-14. Shutoff Valve, Filter and Regulator Assembly, P/N 1653720-1 Removal/Assembly

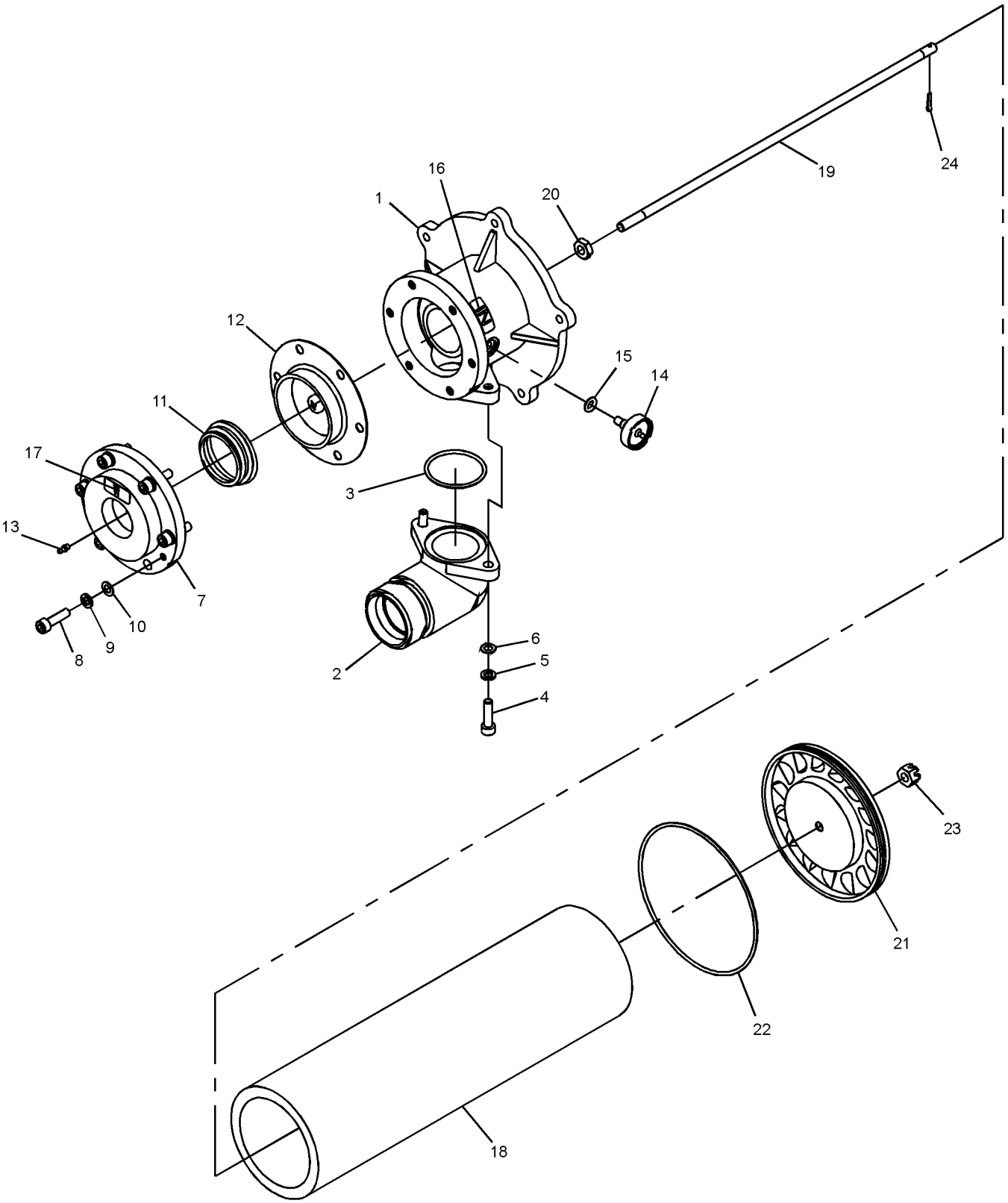

Figure 9-15. Shutoff Valve and Filter Assembly, P/N 1653695-1 Removal/Assembly (Sheet 1 of 2)

1. SHUTOFF VALVE BASE
2. INLET UNIT ELBOW
3. PREFORMED PACKING
4. SOCKET HEAD CAPSCREW
5. LOCKWASHER
6. FLAT WASHER
7. SHUTOFF CAP
8. SOCKET HEAD CAPSCREW
9. LOCKWASHER
10. FLAT WASHER
11. CONICAL SPRING
12. SHUTOFF DIAPHRAGM ASSEMBLY
13. TUBE FITTING
14. FILTER ASSEMBLY
15. PREFORMED PACKING
16. IDENTIFICATION MARKER IN
17. IDENTIFICATION MARKER V1
18. FILTER ELEMENT
19. FILTER ROD
20. PLAIN HEX NUT
21. SWIRLER
22. PREFORMED PACKING
23. CASTELLATED PLAIN NUT
24. COTTER PIN

Figure 9-15. Shutoff Valve and Filter Assembly, P/N 1653695-1 Removal/Assembly (Sheet 2 of 2)

9-54. SHUTOFF VALVE/FILTER ASSEMBLY (V1/FLTR1) DISASSEMBLY. To disassemble the shutoff valve/filter assembly (V1/FLTR1) (1, figure 9-14), proceed as follows:

Support Equipment Required

Quantity	Description	Reference Number
1	Spanner Socket Wrench	3309452-1

NOTE

Index numbers refer to figure 9-14 unless otherwise noted.

For removal of inlet filter (18, figure 9-15) only refer to steps 1 and 3 through 6.

1. Remove shutoff valve/filter/regulator (reducer) assemblies (V1/FLTR1/REG1), refer to Shutoff Valve/Filter/Regulator (Reducer) Assemblies (V1/FLTR1/REG1) Removal (paragraph 9-53).

2. Remove two jack studs (9) and flat washers (10) from the shutoff valve/filter/regulator (7, figure 9-11).

3. For ease of assembly and using an indelible marker or equivalent, mark connection between shutoff valve/filter assembly (1) and adapter and tube assembly (3) prior to disassembly.

4. Remove five plain hex nuts (7), lockwashers (5), and flat washers (6) coupling the shutoff valve and filter assembly (1) to the adapter and tube assembly (3). Leave five socket head capscrews (4) with flat washers (6) attached to the adapter and tube assembly (3).

5. Remove the shutoff valve and filter assembly (1) and preformed packing (13) from the adapter and tube assembly (3).

6. Remove the filter element (18, figure 9-15) from the shutoff valve and filter assembly (1) by removing cotter pin (24, figure 9-15) and plain castellated nut (23, figure 9-15) at the end of the filter rod (19, figure 9-15), then remove the swirler (21, figure 9-15), preformed packing (22, figure 9-15), and filter element (18, figure 9-15) from the shutoff valve and filter assembly (1).

7. Using spanner socket wrench loosen and remove filter assembly (14, figure 9-15) and preformed packing (15, figure 9-15) at port labeled with identification marker IN (16, figure 9-15) by unscrewing filter assembly (14, figure 9-15) from shutoff valve base (1, figure 9-15).

8. Remove the shutoff diaphragm assembly (12, figure 9-15) by removing six socket head capscrews (8, figure 9-15), lockwashers (9, figure 9-15), and flat washers (10, figure 9-15), then remove shutoff cap (7, figure 9-15) with tube fitting (13, figure 9-15), conical spring (11, figure 9-15), and shutoff diaphragm assembly (12, figure 9-15).

9. Remove the inlet unit elbow (2, figure 9-15) and preformed packing (3, figure 9-15) by removing two socket head cap-screws (4, figure 9-15), lockwashers (5, figure 9-15), and flat washers (6, figure 9-15).

9-55. REDUCER ASSEMBLY (REG1) DISASSEMBLY. To disassemble the reducer assembly (REG1) (2, figure 9-14), proceed as follows:

1. Remove shutoff valve/filter/regulator (reducer) assemblies (V1/FLTR1/REG1), refer to Shutoff Valve/Filter/Regulator (Reducer) Assemblies (V1/FLTR1/REG1) Removal (paragraph 9-53).

2. For ease of assembly and using an indelible marker or equivalent, mark connection between reducer assembly (2, figure 9-14) and adapter and tube assembly (3, figure 9-14) prior to disassembly.

3. Remove five self-locking nuts (8, figure 9-14) and flat washers (6, figure 9-14) coupling the reducer assembly (2, figure 9-14) to the adapter and tube assembly (3, figure 9-14). Leave five socket head cap screws (4, figure 9-14) with flat washers (6, figure 9-14) attached to the adapter and tube assembly (3, figure 9-14).

4. Remove the reducer assembly (2, figure 9-14) with preformed packing (13, figure 9-14) from the adapter and tube assembly (3, figure 9-14).

5. Remove four socket head cap screws (10, figure 9-16), lockwashers (11, figure 9-16), and flat washers (12, figure 9-16), then slide deswirler (9, figure 9-16) away from regulator base (1, figure 9-16).

6. Remove regulator piston (6, figure 9-16) and preformed packing (7, figure 9-16) by removing plain hex nut (8, figure 9-16) from the regulator piston rod (1, figure 9-17) of the diaphragm assembly (5, figure 9-16).

7. Remove spring cover (13, figure 9-16) with set screw (19, figure 9-16), spring retainer (18, figure 9-16), and spring (17, figure 9-16) by removing six socket head cap screws (14, figure 9-16), lockwashers (15, figure 9-16), and flat washers (16, figure 9-16) from the regulator base (1, figure 9-16).

8. Remove the diaphragm assembly (5, figure 9-16) with flanged bearing (4, figure 9-16) from the regulator base (1, figure 9-16) by sliding the regulator piston rod (1, figure 9-17) of the diaphragm assembly (5, figure 9-16) from the regulator base.

9. Disassemble the diaphragm assembly (5, figure 9-16) by removing the plain hex nut (7, figure 9-17), lockwasher (6, figure 9-17), and flat washer (5, figure 9-17) from the regulator piston rod (1, figure 9-17).

10. Remove the regulator piston rod (1, figure 9-17) from diaphragm piston (4, figure 9-17), rolling diaphragm (3, figure 9-17), and diaphragm retainer plate (2, figure 9-17).

9-56. BED OUTLET STRUCTURE ASSEMBLY REMOVAL. To remove the bed outlet structure assembly (1, figure 9-11), proceed as follows:

Materials Required

Quantity	Description	Reference Number
As Required	Protective Cap Plug	NAS834-29

WARNING

Do not use oil, or any material containing oil, in conjunction with oxygen equipment. Oil, even in minute quantity, coming in contact with oxygen can cause explosion or fire. Dust, lint, and fine metal particles are also dangerous.

NOTE

Index numbers refer to figure 9-11 unless otherwise noted.

1. Ensure PSA assembly (2, figure 9-10) is placed on a flat bench surface with bottom side down, then work from output end.

2. Remove controller/monitor assembly, refer to Controller/Monitor Assembly Removal (paragraph 9-49).

3. Remove plastic tubing (40) between left oxygen bed assembly (6) and right oxygen bed assembly (5) on output end of the PSA assembly. Place protective cap plugs (NAS834-29) on the left and right oxygen bed assembly (6 and 5) outputs.

4. Remove labeled plastic tubing O_2 (60) from oxygen output port labeled with identification marker O_2 (51) on plenum assembly (ACC1) (2).

5. Remove labeled plastic tubing N_2 (59) attached to the tube fitting (11) attached to tapped nipple (10) on the output end of the PSA assembly.

6. Remove oxygen check valves (CV1 and CV2), refer to Oxygen Check Valves (CV1 and CV2) Removal (paragraph 9-50).

7. Remove nitrogen check valves (CV3, CV4, and CV5), refer to Nitrogen Check Valves (CV3, CV4 and CV5) Removal (paragraph 9-51).

8. Remove three plain hex nuts (36), lockwashers (37), and flat washers (38) from right oxygen bed assembly (5) on the output end of the PSA assembly (2, figure 9-10).

9. Remove five plain hex nuts (36), lockwashers (37), and flat washers (38) from the left oxygen bed assembly (6) on the output end of the PSA assembly (2, figure 9-10).

10. Remove two plain hex nuts (36), lockwashers (37), and flat washers (38), then remove one self-locking hex nut (39) with flat washer (38) from the right nitrogen bed assembly (3) on the output end of the PSA assembly (2, figure 9-10).

11. Remove three plain hex nuts (36), lockwashers (37), and flat washers (38), then remove one self-locking hex nut (39) with flat washer (38) from the left nitrogen bed assembly (4) on the output end of the PSA assembly (2, figure 9-10).

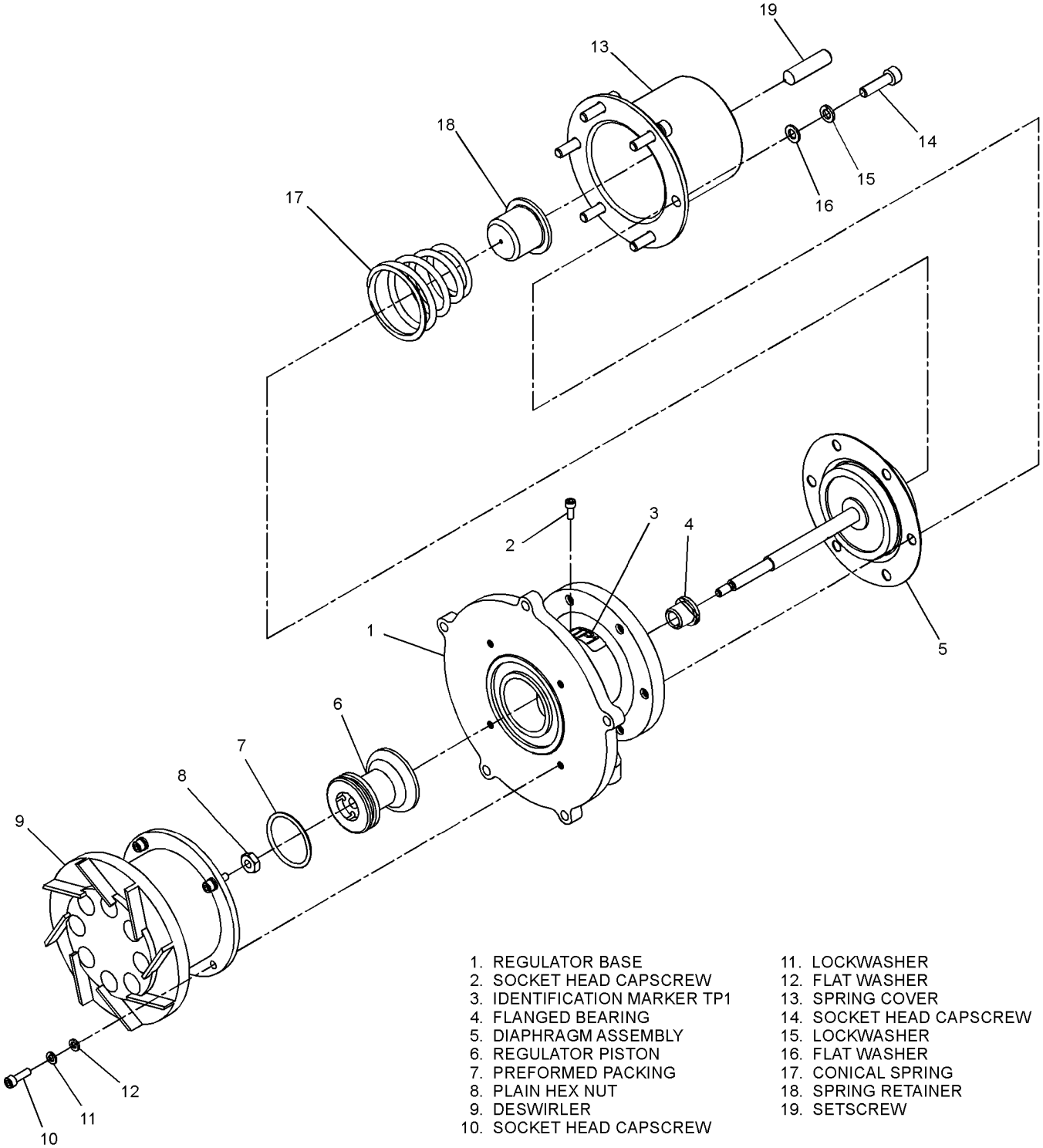

1. REGULATOR BASE
2. SOCKET HEAD CAPSCREW
3. IDENTIFICATION MARKER TP1
4. FLANGED BEARING
5. DIAPHRAGM ASSEMBLY
6. REGULATOR PISTON
7. PREFORMED PACKING
8. PLAIN HEX NUT
9. DESWIRLER
10. SOCKET HEAD CAPSCREW
11. LOCKWASHER
12. FLAT WASHER
13. SPRING COVER
14. SOCKET HEAD CAPSCREW
15. LOCKWASHER
16. FLAT WASHER
17. CONICAL SPRING
18. SPRING RETAINER
19. SETSCREW

009016

Figure 9-16. Reducer Assembly, P/N 1653696-1 Removal/Assembly

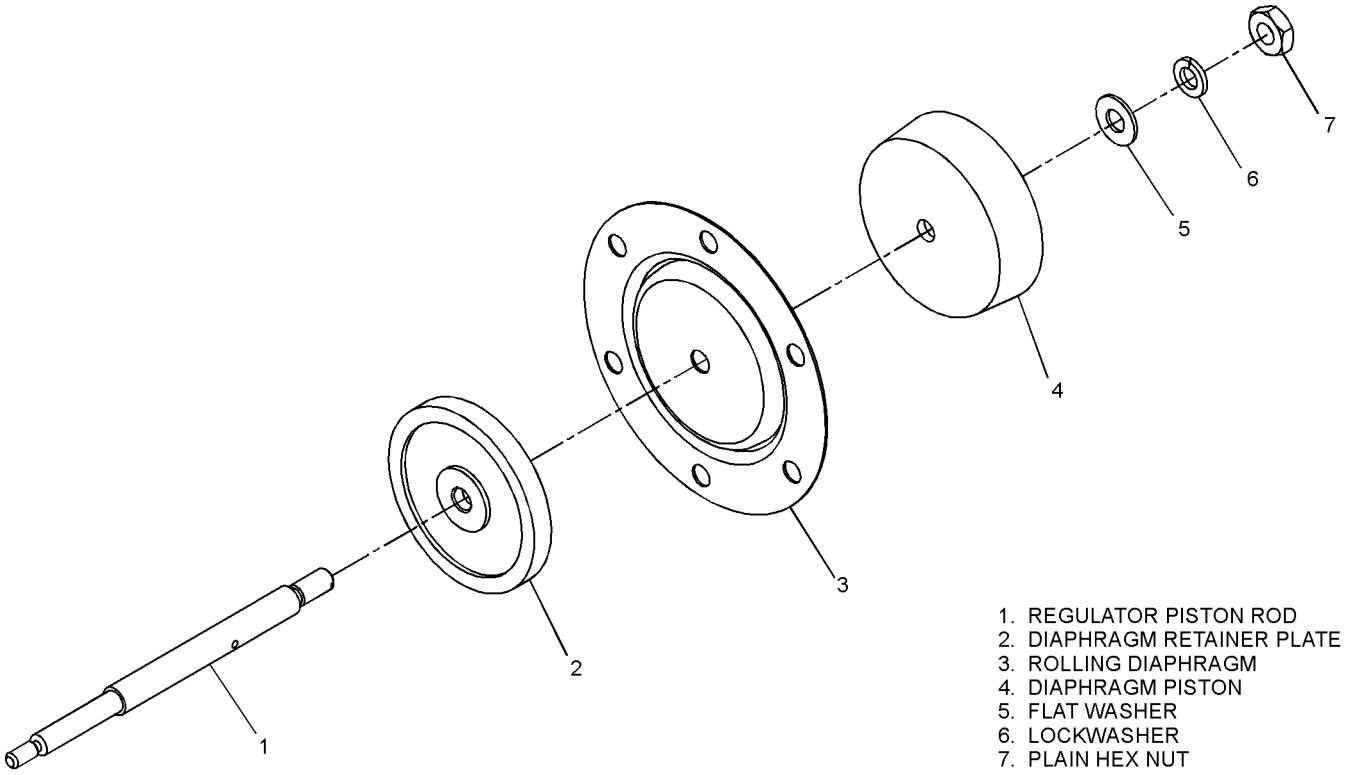

009017

Figure 9-17. Regulator Diaphragm Assembly, P/N 1647152-1 Removal/Assembly

12. Remove two plain hex nuts (36), lockwashers (37), and flat washers (38) from the shutoff valve/filter/regulator assembly (7) on the output end of the PSA assembly (2, figure 9-10).

13. Remove band clamp (7, figure 9-13) from plenum retaining flange (67, figure 9-11) at output end of plenum assembly (ACC1) (2).

9-57. TUBE FITTINGS DISC ASSEMBLY REMOVAL. To remove the tube fittings disc assembly (7, figure 9-10), proceed as follows:

NOTE

Index numbers refer to figure 9-10 unless otherwise noted.

1. If not previously removed, remove tube fitting disc assembly (7) from back of the controller/monitor assembly (1) by loosening captive screw (8) to force tube fitting disc assembly (7) away from controller/monitor assembly (1), then pull tube fitting disc assembly (7) back as necessary to disconnect pneumatic lines from controller/monitor assembly (1).

2. Remove eight labeled plastic tubings (58 through 65, figure 9-11) by gently pulling from eight tube fitting barbs (8, figure 9-18). Inspect eight labeled plastic tubings (58 through 65, figure 9-11) for cracks or distortion and replace as required.

9-58. TUBE FITTINGS DISC ASSEMBLY DISASSEMBLY. To disassemble the tube fittings disc assembly (7, figure 9-10), proceed as follows:

NOTE

Index numbers refer to figure 9-18 unless otherwise noted.

1. Remove the external retainer ring (3) on the back side of the tube retainer disc (1), and remove captive screw (2) and flat washer (4) from tube retainer disc (1).

2. Remove the external retainer ring (9) on the front side of the tube retainer disc (1), and remove tube fitting barb (8) with preformed packing (10) from tube retainer disc (1).

3. Remove the external retainer ring (7) on the back side of the tube retainer disc (1), and remove vacuum fitting (5) with inlet filter (6) and preformed packing (12) from tube retainer disc (1).

4. If necessary, remove tubular spring pin (11) from tube retainer disc (1).

9-59. BED INLET STRUCTURE ASSEMBLY REMOVAL. To remove the bed inlet structure assembly (15, figure 9-12), proceed as follows:

WARNING

Do not use oil, or any material containing oil, in conjunction with oxygen equipment. Oil, even in minute quantity, coming in contact with oxygen can cause explosion or fire. Dust, lint, and fine metal particles are also dangerous.

NOTE

Index numbers refer to figure 9-12 unless otherwise noted.

1. Ensure PSA assembly (2, figure 9-10) is placed on a flat bench surface with bottom side down, then work from the exhaust end.

2. Remove labeled plastic tubing EXH (44) and labeled plastic tubing DRAIN (40) at the exhaust port of the slide valve assembly (16).

3. Remove four socket head capscrews (37), lockwashers (38), and flat washers (39) securing slide valve assembly (16) to bed inlet structure assembly (15).

4. Remove two socket head capscrews (23), lockwashers (24), and flat washers (25) from each elbow and tube assembly (17) at the end attached to the slide valve (16).

5. Remove three socket head capscrews (19), lockwashers (20), flat washers (21), and elbow retainers (18) from each elbow and tube assembly (17) at the end attached to the oxygen bed assemblies (4 and 5) and nitrogen bed assemblies (2 and 3).

6. Remove four elbows and tube assemblies (17) with preformed packing (26) at the end attached to the slide valve (16), and preformed packing (22) at the end attached to the oxygen bed assemblies (4 and 5) and nitrogen bed assemblies (2 and 3).

7. Remove ten plain hex nuts (33), lockwashers (34), and flat washers (35). Remove two self-locking hex nuts (36) and flat washers (35) from nitrogen bed assemblies (2 and 3) and oxygen bed assemblies (4 and 5) on the exhaust end of the PSA assembly (2, figure 9-10).

8. If necessary, remove lifting strap (27) with strap plate (28) by removing four socket head capscrews (29), flat washers (31), lockwashers (30), flat washers (31), and plain hex nuts (32).

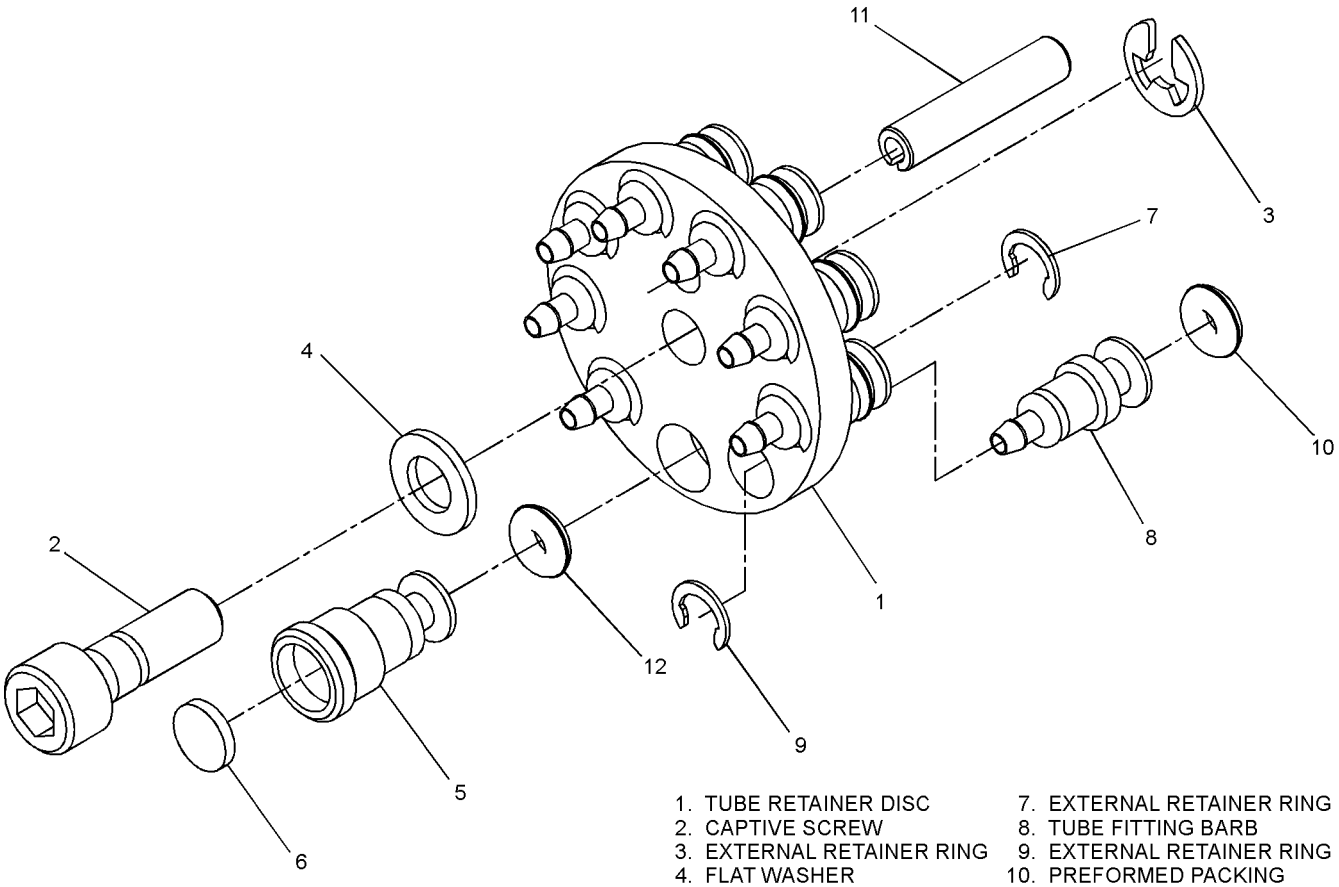

1. TUBE RETAINER DISC
2. CAPTIVE SCREW
3. EXTERNAL RETAINER RING
4. FLAT WASHER
5. VACUUM FITTING
6. INLET FILTER
7. EXTERNAL RETAINER RING
8. TUBE FITTING BARB
9. EXTERNAL RETAINER RING
10. PREFORMED PACKING
11. TUBULAR SPRING PIN
12. PREFORMED PACKING

009018

Figure 9-18. Tube Fittings Disc Assembly, P/N 1653870-1 Removal/Assembly

9. If necessary, remove two captive screws (41) and flat washers (43) by removing external retainer rings (42).

9-60. SLIDE VALVE ASSEMBLY (V2) REMOVAL. To remove slide valve assembly (16, figure 9-12), proceed as follows:

NOTE

Index numbers refer to figure 9-12 unless otherwise noted.

1. Ensure PSA assembly (2, figure 9-10) is placed on a flat bench surface with bottom side down, then work from the exhaust end.

2. Remove the bed inlet structure assembly, refer to Bed Inlet Structure Assembly Removal (paragraph 9-59).

3. Remove labeled plastic tubings V2 (62 and 63, figure 9-11) and labeled plastic tubing REG (64, figure 9-11) from the slide valve at the ports with identification markers V2 and REG ports (45 and 46).

4. Place PSA assembly (2, figure 9-10) on its side to gain access to the plenum assembly (ACC1) (1).

5. Remove plain hex nut (8), lockwasher (9), and flat washer (10) from the support stud on the closed end of plenum assembly (ACC1) (1).

6. Place PSA assembly (2, figure 9-10) on a flat bench surface with bottom side down, then work from the exhaust end.

7. Remove two socket head capscrews (11), lockwashers (12), and flat washers (13) securing slide valve assembly (16) to shutoff/filter/regulator assembly (6).

8. Remove slide valve assembly (16) and preformed packing (14) from PSA assembly (2, figure 9-10).

9. Ensure that all open holes are covered with tape or protective cap plugs.

9-61. CENTER STRUCTURE ASSEMBLY AND OXYGEN/NITROGEN BED ASSEMBLIES REMOVAL. To remove center structure assembly (5, figure 9-13), left/right oxygen bed assemblies (4 and 5, figure 9-12) and left/right nitrogen bed assemblies (2 and 3, figure 9-12), proceed as follows:

WARNING

When working with oxygen equipment, make certain that clothing, tubing, fittings, and equipment are free of oil, grease, fuel, hydraulic fluid, or any combustible liquid. Oil, or any material containing oil, even in minute quantity, in conjunction with high purity oxygen under pressure can cause explosion or fire. Dust, lint, and fine metal particles are also dangerous.

NOTE

Index numbers refer to figure 9-12 unless otherwise noted.

1. Ensure PSA assembly (2, figure 9-10) is placed on a flat bench surface with bottom side down, then work from the exhaust end.

2. Remove controller/monitor assembly, refer to Controller/Monitor Assembly Removal (paragraph 9-49).

3. Remove plenum assembly (ACC1), refer to Plenum Assembly (ACC1) Removal (paragraph 9-52).

4. Remove the shutoff valve/filter/regulator assemblies (V1/FLTR1/REG1), refer to Shutoff Valve/Filter/Regulator Assemblies (V1/FLTR1/REG1) Removal (paragraph 9-53).

5. Remove plastic tubing, refer to Plastic Tubing Removal (paragraph 9-62).

6. Remove the bed outlet structure assembly, refer to Bed Outlet Structure Assembly Removal (paragraph 9-56).

7. Remove two band clamps (8, figure 9-13) from the left and right nitrogen bed assemblies (2 and 3, figure 9-12) on the center structure assembly (5).

8. Remove the bed inlet structure assembly, refer to Bed Inlet Structure Assembly Removal (paragraph 9-59).

9. Remove four plain hex nuts (10, figure 9-13), lockwashers (11, figure 9-13), and flat washers (12, figure 9-13) from the left/right oxygen bed assemblies (4 and 5) on the center structure assembly (5, figure 9-13).

10. If necessary, remove damping pads (15 through 17, figure 9-13) by peeling free from the center structure assembly (5, figure 9-13).

11. Ensure that electrical tiedown cleats (6) are not missing or damaged. If necessary, replace.

9-62. PLASTIC TUBING REMOVAL. To remove the plastic tubing, proceed as follows:

Materials Required

Quantity	Description	Reference Number
As Required	Plastic Bag	MIL-B-117
As Required	Rubber Band	ZZ-A-1415
As Required	Electrical Tiedown Straps	MS3367-4-9

WARNING

Because nonmetallic tubing is in the oxygen flow path, open ends must be bagged to maintain oxygen clean requirement when tubing is disconnected.

NOTE

Tag nonmetallic tubing by marking bags before removal for identification during installation.

Index numbers refer to figure 9-11 unless otherwise noted.

1. Ensure plastic tubing is tagged or labeled prior to removal.

2. Remove only those electrical tiedown straps necessary to remove plastic tubing (40, 58 through 65, figure 9-11) and (40, figure 9-12) to be disconnected from the concentrator.

3. Disconnect plastic tubing from barb fitting by firmly pulling on tube. Place plastic bag over open ends of plastic tubing. Secure with rubber bands.

9-63. CLEANING OF DISASSEMBLED PARTS.

9-64. To clean the disassembled concentrator component parts, proceed as follows:

Materials Required

Quantity	Description	Reference Number
As Required	Acetone	O-A-51
As Required	Toluene	TT-T-548
	or	
As Required	Xylene	TT-X-916
As Required	Nitrogen	A-A-59503
As Required	Distilled Water	NIIN 00-356-4936
As Required	Plastic Bags	MIL-B-117 (CAGE 81349)
As Required	Abrasive	MIL-A-9962 Type I, Grade AA

Support Equipment Required

Quantity	Description	Reference Number
1	Goggles or Face Shield	G-G-531 (NIIN 00-052-3776)
1	Regulator, Nitrogen	9-580 or equivalent

WARNING

When working with oxygen equipment, ensure that clothing, tubing, fittings, and equipment are free of oil, grease, fuel, hydraulic fluid, or any combustible liquid. Oil, or any material containing oil, even in minute quantity, in conjunction with high purity oxygen under pressure can cause explosion or fire. Dust, lint, and fine metal particles are also dangerous.

1. Clean all electrical contact points by lightly furbishing with a fine abrasive material.

2. Clean all metallic parts using procedures outlined in NAVAIR 13-1-6.4-1. Blow dry with oil-free water-pumped nitrogen.

CAUTION

Do not attempt to clean any silicone rubber or elastic parts that have become contaminated with oil or grease. All such parts shall be replaced.

3. Prior to installation, wash all silicone rubber parts in distilled water and blow dry with oil-free water-pumped nitrogen.

4. Cleaned parts shall be sealed in plastic bags for storage. Also, bag all complete assemblies that are not immediately returned to service.

WARNING

Use goggles for eye protection when using xylene or toluene.

5. Remove old RTV adhesive by applying small amounts of xylene or toluene.

WARNING

Use goggles for eye protection when using acetone.

6. Remove old sealant from screws using small amounts of acetone.

9-65. INSPECTION OF DISASSEMBLED PARTS.

9-66. Carefully inspect the disassembled concentrator for cleanliness, irregular wear, and good condition using the following procedures and guidance.

1. Inspect all screws for nicks, burrs, rounded screwdriver slots, or other obvious damage; replace as necessary.

2. Inspect all metallic surfaces for corrosion, cleanliness, and other obvious damage; clean or replace parts as necessary.

3. Inspect molecular sieve bed assemblies for security of self-sealing machine screws, nicks in sealing surfaces, stripped threads in screw holes, and cleanliness; replace or repair as necessary.

4. Inspect electrical receptacle connectors for bent pins, corrosion, and cleanliness; clean or replace as necessary.

5. Inspect plastic tubing for cuts, breaks, and other obvious damage; replace as necessary.

6. Inspect shutoff valve/filter/regulator assembly (V1/FLTR1/REG1), plenum assembly (ACC1), and controller/monitor box assembly for good condition; replace if necessary.

7. Inspect outlet, inlet, and center structure assemblies and lifting straps for corrosion, breaks, and good condition; clean, repair, or replace as necessary.

8. Inspect check valve assemblies for smooth seating surfaces, cleanliness, bent or distorted springs, and freedom of operation; replace as necessary.

9-67. REPAIR.

9-68. Repair of the concentrator is limited to replacing defective component parts and minor repairs (small dents, scratches, abrasions, nicks, and other obvious damage) of tubing. To make minor repairs, proceed as follows:

Materials Required

Quantity	Description	Reference Number
As Required	Alcohol, Isopropyl	TT-I-735
1	Brush	A-A-289
As Required	Compound, Sealant	Loctite 222
As Required	Instrument-Aircraft Grease	Christo-Lube or equivalent
As Required	Silicone Adhesive Sealant	Dow Corning 3145 Gray Sealant
As Required	Insulation Sleeving	M23053/5-103-0
As Required	Insulation Sleeving	M23053/5-104-0
As Required	Insulation Sleeving	M23053/5-106-0
As Required	Insulation Sleeving	M23053/5-109-0
As Required	Solder	QQ-S-571 Comp SN63
As Required	Tape, Antiseize	MIL-T-27730A
As Required	Tape, Pressure Sensitive	PPP-T-42
As Required	Wire, Nonelectrical	MS20995C20

Support Equipment Required

Quantity	Description	Reference Number
1	Pliers, Round Nose, Extra Fine	Utica, #U431
1	Pliers, Flat Nose	Utica, #20-4-1/2 GCS
1	Pliers, Maximum Full Flush Cutters	Excelta, #119E1
1	Stripper, Stranded Wire	Ideal, #45-121
1	Stripper, Solid Wire	Ideal, #45-125
1	Wrench, Torque 30 in-lb	TE3A
1	Wrench, Torque 150 in-lb	TE12A

1. Tubing assemblies with minor dents not causing flow restriction are considered serviceable. Small scratches, abrasions, and nicks can be smoothed with a burnishing tool or aluminum wool.

2. To avoid burnishing the same area more than once, each burnished area shall be identified by a painted band. Bands shall be black in color and shall cover an area not less than 2 inches or more than 3 inches in length.

3. Tubing that is nicked, abraded, or scratched in an area that is identified as having been previously burnished shall be condemned.

9-69. ASSEMBLY.

NOTE

Equivalent tools or materials may be used as long as the integrity of the test, procedures, or equipment is not compromised.

Coat all preformed packings using Christo-Lube prior to installing unless otherwise noted.

9-70. PLASTIC TUBING INSTALLATION. To install plastic tubing (40, 58 through 65, figure 9-11) and (40, figure 9-12), proceed as follows:

WARNING

Because nonmetallic tubing is in the oxygen flow path, open ends must be bagged to maintain oxygen clean requirement when tubing is disconnected.

NOTE

When routing nonmetallic tubing through inlet, center, and outlet structure assemblies utilize holes protected with plastic grommets.

Tag nonmetallic tubing by marking bags before removal for identification during installation.

1. If plastic tubing must be replaced, cut plastic tubing to length prior to installation.

2. Remove plastic bags from ends of plastic tubing. Install plastic tubing on barb fittings as per tag or label.

9-71. CENTER STRUCTURE ASSEMBLY AND OXYGEN/NITROGEN BED ASSEMBLIES INSTALLATION. To install the center structure assembly (5, figure 9-13), left/right oxygen bed assemblies (4 and 5, figure 9-12) and left/right nitrogen bed assemblies (2 and 3, figure 9-12), proceed as follows:

Materials Required

Quantity	Description	Reference Number
As Required	Grease, Aircraft and Instrument, Fuel and Oxidizer Resistant	Christo-Lube or equivalent

Support Equipment Required

Quantity	Description	Reference Number
1	Wrench, Torque 0-30 in-lbs	TE3A
1	Wrench, Torque 0-150 in-lbs	TE12A

WARNING

Do not use oil, or any material containing oil, in conjunction with oxygen equipment. Oil, even in minute quantity, coming in contact with oxygen can cause explosion or fire. Dust, lint, and fine metal particles are also dangerous.

NOTE

Index numbers refer to figure 9-12 unless otherwise noted.

1. Ensure that the electrical tiedown cleats (6, figure 9-13) are not missing or damaged. If necessary, replace.

2. If eight damping pads (15 through 17, figure 9-13) were removed, install new damping pads (15 through 17, figure 9-13) by peeling off backing and pressing in place with adhesive-side down to the center structure assembly (5, figure 9-13).

NOTE

Nitrogen beds shall be replaced as a set.

The right nitrogen bed assembly (3, figure 9-11) shall be installed with three jackscrews and label (55, figure 9-11) facing up. The left nitrogen bed assembly (4, figure 9-11) shall be installed with three jackscrews and label (55, figure 9-11) facing up and one jackscrew facing down and inboard.

3. Align the center structure (5, figure 9-13) assembly over the right and left nitrogen bed assemblies (3 and 4, figure 9-11), then install two band clamps (8, figure 9-13) on the center structure assembly (5, figure 9-13), do not tighten two band clamps (8, figure 9-13).

NOTE

Oxygen beds shall be replaced as a set.

The right and left oxygen bed assemblies (5 and 6, figure 9-11) shall be installed with purge ports on the outlet side, on top, and facing inboard. See figure 9-11 for clarification.

4. Align the left and right oxygen bed assemblies (5 and 6, figure 9-11) on the center structure assembly (5, figure 9-13), then install four flat washers (12, figure 9-13), lockwashers (11), and plain hex nuts (10), do not tighten four plain hex nuts (10).

5. Install bed inlet structure assembly (15) onto nitrogen and oxygen bed assemblies (2, 3, 4 and 5).

6. Attach nitrogen bed assemblies (2 and 3) to bed inlet structure assembly (15) using washer (35) and self-locking nut (36) on outboard jackscrews, do not tighten nuts (36), refer to figure 9-12 for clarification.

7. Install four washers (35), lockwashers (34), and nuts (33) to remaining jackscrews on nitrogen bed assemblies (2 and 3), do not tighten nuts (33).

8. Attach oxygen bed assemblies (4 and 5) to bed inlet structure assembly (15) by installing six washers (35), lockwashers (34), and nuts (33) on oxygen bed assemblies (4 and 5), do not tighten nuts.

9. Install bed outlet structure assembly (1, figure 9-11) onto nitrogen and oxygen bed assemblies (3, 4, 5, and 6, figure 9-11).

10. Attach nitrogen bed assemblies (3 and 4, figure 9-11) to bed outlet structure assembly (1, figure 9-11) using washer (38, figure 9-11) and self-locking nut (39, figure 9-11) on outboard jackscrews, do not tighten nuts (39, figure 9-11), refer to figure 9-11 for clarification.

11. Install four washers (38, figure 9-11), lockwashers (37, figure 9-11), and nuts (36, figure 9-11) to remaining jackscrews on nitrogen bed assemblies (3 and 4, figure 9-11), do not tighten nuts (36, figure 9-11).

12. Attach oxygen bed assemblies (5 and 6, figure 9-11) to bed outlet structure assembly (1, figure 9-11) by installing six flatwashers (38, figure 9-11), lockwashers (37, figure 9-11), and nuts (36, figure 9-11) on oxygen bed assemblies (4 and 5, figure 9-11), do not tighten nuts.

13. Tighten all nuts (36 and 39, figure 9-11) connecting nitrogen and oxygen bed assemblies (3, 4, 5, and 6, figure 9-11) to bed outlet structure assembly (1, figure 9-11). Torque to a value of 10.0 to 11.0 in.-lbs.

14. Tighten all nuts (33 and 36) connecting nitrogen and oxygen bed assemblies (2, 3, 4 and 5) to bed inlet structure assembly (15). Torque to a value of 10.0 to 11.0 in.-lbs.

15. Tighten plain hex nuts (10, figure 9-13) securing oxygen bed assemblies (4 and 5) to center structure assembly (5, figure 9-13). Torque to a value of 10.0 to 11.0 in.-lbs.

16. Tighten two band clamps (8, figure 9-13) securing right and left nitrogen bed assemblies (3 and 4, figure 9-13) on the center structure assembly (5, figure 9-13).

17. Install two plain hex nuts (36, figure 9-11) on jack studs (9, figure 9-14). Slide jack studs (9, figure 9-14) on the inlet end of shutoff valve/filter/regulator assembly (7, figure 9-11) into bed outlet support structure (1, figure 9-11).

18. Install two flat washers (37, figure 9-11), lockwashers (38, figure 9-11), and nuts (36, figure 9-11) onto jack studs (9, figure 9-14) to hold shutoff valve/filter/regulator assembly (7, figure 9-11) to the bed outlet structure assembly (1, figure 9-11), do not tighten nuts.

19. Loosely attach band clamps (9, figure 9-13) holding shutoff valve/filter/regulator assembly (7, figure 9-11) to center structure assembly (5, figure 9-13).

20. Place PSA assembly (2, figure 9-10) on its side.

21. Remove protective cap plugs or tape from all holes on slide valve assembly (16).

22. Lightly lubricate preformed packing (14) using Christo-Lube, then align slide valve assembly (16) and preformed packing (14) on the shutoff/filter/regulator assembly (6). Install two socket head capscrews (11), each with lockwasher (12) and flat washer (13). Torque to a value of 54.0 to 57.0 in.-lbs.

23. Place PSA assembly (2, figure 9-10) flat.

24. Lightly lubricate preformed packing (26 and 22) using Christo-Lube. Install two elbows and tube assemblies (17) P/N 1653706-1 with preformed packing (26) at slide valve (16) end and install preformed packing (22) at right oxygen bed assembly (3) end and left nitrogen bed assembly (4) end.

25. Lightly lubricate preformed packing (26 and 22) using Christo-Lube. Install two elbows and tube assemblies (48) P/N 1653707-1 with preformed packing (26) at slide valve (16) end and install preformed packing (22) at left oxygen bed assembly (5) end and right nitrogen bed assembly (2) end.

26. Install elbow retainer (18), each with three socket head capscrews (19), lockwashers (20), flat washers (21), to each elbow and tube assembly (17 and 48) at the end attached to the oxygen bed assemblies (4 and 5) and nitrogen bed assemblies (2 and 3). Torque to a value of 18.5 to 21.0 in.-lbs.

27. Install two socket head capscrews (23), each with lockwasher (24) and flat washer (25), to each elbow and tube assembly (17 and 48) at the end attached to the slide valve (16). Torque to a value of 18.5 to 21.0 in.-lbs.

28. Install four socket head capscrews (37), lockwashers (38), and flat washers (39) securing slide valve assembly (16) to bed inlet structure assembly (15). Torque to a value of 18.5 to 21.0 in.-lbs.

29. Install labeled plastic tubing EXH (44) and labeled plastic tubing DRAIN (40) on tube fittings on exhaust port of the slide valve.

30. Adjust two plain hex nuts (36, figure 9-11) on jack studs (9, figure 9-14) between the inlet end of shutoff valve/filter/regulator assembly (7, figure 9-11) and the bed outlet support structure (1, figure 9-11) until both plain hex nuts (36, figure 9-11) are resting against the bed outlet support structure (1, figure 9-11).

31. Torque two plain hex nuts (36, figure 9-11) securing the shutoff valve/filter/regulator assembly (7, figure 9-11) on the output end of the PSA assembly (2, figure 9-10) to a value of 10 to 11 in.-lbs.

32. Install one end of labeled plastic tubing DRAIN (40) to DRAIN port (12, figure 9-14) of shutoff/filter/regulator assembly (6) and other end to slide valve (16) DRAIN port on EXHAUST port.

33. Install plenum assembly (ACC1) (paragraph 9-80).

9-72. SLIDE VALVE ASSEMBLY (V2) INSTALLATION. To install slide valve assembly (16, figure 9-12), proceed as follows:

Materials Required

Quantity	Description	Reference Number
As Required	Grease, Aircraft and Instrument, Fuel and Oxidizer Resistant	Christo-Lube or equivalent

Support Equipment Required

Quantity	Description	Reference Number
1	Wrench, Torque 0-30 in-lbs	TE3A
1	Wrench, Torque 0-150 in-lbs	TE12A

NOTE

Index numbers refer to figure 9-12 unless otherwise noted.

1. Ensure PSA assembly (2, figure 9-10) is placed on a flat bench surface with bottom side down, then work from the exhaust end.

2. Remove protective cap plugs or tape from all holes on slide valve assembly (16).

3. Lightly lubricate preformed packing (14) using Christo-Lube, then align slide valve assembly (16) and preformed packing (14) on the shutoff/filter/regulator assembly (6). Install two socket head capscrews (11), each with lockwasher (12) and flat washer (13). Torque to a value of 54.0 to 57.0 in.-lbs.

4. Place PSA assembly (2, figure 9-10) on its side to gain access to the plenum assembly (ACC1) (1).

5. Install plain hex nut (8), lockwasher (9), and flat washer (10) to the support stud on the closed end of plenum assembly ACC1 (1). Torque to a value of 4.0 to 6.0 in.-lbs.

6. Place PSA assembly (2, figure 9-10) on a flat bench surface with bottom side down, then work from the exhaust end.

7. Install labeled plastic tubings V2 (62 and 63, figure 9-11) and labeled plastic tubing REG1 (64, figure 9-11) to the slide valve (16) at the ports labeled with identification markers V2 and REG1 (45 and 46).

8. Install the bed inlet structure assembly (paragraph 9-73).

9-73. BED INLET STRUCTURE ASSEMBLY INSTALLATION. To install the bed inlet structure assembly (15, figure 9-12), proceed as follows:

Materials Required

Quantity	Description	Reference Number
As Required	Grease, Aircraft and Instrument, Fuel and Oxidizer Resistant	Christo-Lube or equivalent

Support Equipment Required

Quantity	Description	Reference Number
1	Wrench, Torque 0-30 in-lbs	TE3A

WARNING

Do not use oil, or any material containing oil, in conjunction with oxygen equipment. Oil, even in minute quantity, coming in contact with oxygen can cause explosion or fire. Dust, lint, and fine metal particles are also dangerous.

NOTE

Index numbers refer to figure 9-12 unless otherwise noted.

1. Ensure PSA assembly (2, figure 9-10) is placed on a flat bench surface with bottom side down, then work from the exhaust end.

2. Install captive screw (41), flat washer (42), and external retainer ring (43), if removed.

3. Install lifting strap (27) with strap plate (28) by installing four socket head capscrews (29), each with lockwasher (30), flat washer (31), and plain hex nut (32), if removed. Torque to a value of 10.0 to 11.0 in.-lbs.

NOTE

Remove protective caps from ends of nitrogen bed assemblies (2 and 3) and oxygen bed assemblies (4 and 5).

4. Align bed inlet structure assembly (15), then install ten plain hex nuts (33), each with lockwasher (34) and flat washer (35), and install two flat washers (35) and self-locking nuts (36) to nitrogen bed assemblies (2 and 3) and oxygen bed assemblies (4 and 5) on the exhaust end of the PSA assembly (2, figure 9-10). Torque to a value of 10.0 to 11.0 in.-lbs.

5. Lightly lubricate preformed packing (26 and 22) using Christo-Lube. Install two elbows and tube assemblies (17) P/N 1653706-1 with preformed packing (26) at slide valve (16) end and install preformed packing (22) at right oxygen bed assembly (3) end and left nitrogen bed assembly (4) end.

6. Lightly lubricate preformed packing (26 and 22) using Christo-Lube. Install two elbows and tube assemblies (48) P/N 1653707-1 with preformed packing (26) at slide valve (16) end and install preformed packing (22) at left oxygen bed assembly (5) end and right nitrogen bed assembly (2) end.

7. Install elbow retainer (18), each with three socket head capscrews (19), lockwashers (20), flat washers (21), to each elbow and tube assembly (17 and 48) at the end attached to the oxygen bed assemblies (4 and 5) and nitrogen bed assemblies (2 and 3). Torque to a value of 18.5 to 21.0 in.-lbs.

8. Install two socket head capscrews (23), each with lockwasher (24) and flat washer (25), to each elbow and tube assembly (17 and 48) at the end attached to the slide valve (16). Torque to a value of 18.5 to 21.0 in.-lbs.

9. Install four socket head capscrews (37), lockwashers (38), and flat washers (39) securing slide valve assembly (16) to bed inlet structure assembly (15). Torque to a value of 18.5 to 21.0 in.-lbs.

10. Install labeled plastic tubing EXH (44) and labeled plastic tubing DRAIN (40) on tube fittings on exhaust port of the slide valve (16).

9-74. TUBE FITTINGS DISC ASSEMBLY, ASSEMBLY. To assemble tube fittings disc assembly (7, figure 9-10), proceed as follows:

NOTE

Index numbers refer to figure 9-18 unless otherwise noted.

1. If removed, install tubular spring pin (11) into tube retainer disc (1).

2. Lightly lubricate new preformed packing (12) using Christo-Lube, then install vacuum fitting (5) with new inlet filter (6) and new preformed packing (12) into tube retainer disc (1), then install the external retainer ring (7) on the back side of the tube retainer disc (1) securing vacuum fitting (5).

3. Lightly lubricate new preformed packing (10) using Christo-Lube, then install tube fitting barb (8) with new preformed packing (10) into tube retainer disc (1), then install the external retainer ring (9) on the front side of the tube retainer disc (1) securing tube fitting barb (8).

4. Install captive screw (2) and flat washer (4) to tube retainer disc (1), then install the external retainer ring (3) on the back side of the tube retainer disc (1) securing captive screw (2).

9-75. TUBE FITTINGS DISC ASSEMBLY INSTALLATION. To install the tube fittings disc assembly, proceed as follows:

NOTE

Index numbers refer to figure 9-10 unless otherwise noted.

1. Install eight labeled plastic tubings (58 through 65, figure 9-11) by gently pushing onto eight tube fitting barbs (8, figure 9-18).

2. Install tube fitting disc assembly (7) by aligning tubular spring pin (11) on back of controller/monitor assembly (1), then push tube fittings disc assembly (7) on to back of controller/monitor assembly (1) as necessary. Tighten captive screw (8) to secure tube fittings disc assembly (7) to controller/monitor assembly (1).

9-76. BED OUTLET STRUCTURE ASSEMBLY INSTALLATION. To install bed outlet structure assembly (1, figure 9-11), proceed as follows:

Support Equipment Required

Quantity	Description	Reference Number
1	Wrench, Torque 0-30 in-lbs	TE3A

WARNING

Do not use oil, or any material containing oil, in conjunction with oxygen equipment. Oil, even in minute quantity, coming in contact with oxygen can cause explosion or fire. Dust, lint, and fine metal particles are also dangerous.

NOTE

Index numbers refer to figure 9-11 unless otherwise noted.

1. Ensure PSA assembly (2, figure 9-10) is placed on a flat bench surface with bottom side down, then work from output end.

2. Install band clamp (7, figure 9-13) on plenum retainer flange (67) at output end of plenum assembly (ACC1) (2).

3. Install two flat washers (38), lockwashers (37), and plain hex nuts (36) to the shutoff valve/filter/regulator assembly (7) on the output end of the PSA assembly (2, figure 9-10). Torque to a value of 10.0 to 11.0 in.-lbs.

4. Install three flat washers (38, figure 9-11), lockwashers (37), and plain hex nuts (36); then install flat washer (38) and self-locking nut (39) to the left nitrogen bed assembly (4) on the output end of the PSA assembly (2, figure 9-10). Torque to a value of 10.0 to 11.0 in.-lbs.

5. Install two flat washers (38), lockwashers (37), and two plain hex nuts (36); then install one flat washer (38) and self-locking nut (39) to the right nitrogen bed assembly (3) on the output end of the PSA assembly (2, figure 9-10). Torque to a value of 10.0 to 11.0 in.-lbs.

6. Install five flat washers (38), lockwashers (37), and plain hex nuts (36) to left oxygen bed assembly (6) on output end of PSA assembly (2, figure 9-10). Torque to a value of 10.0 to 11.0 in.-lbs.

7. Install three flat washers (38), lockwashers (37), and plain hex nuts (36) to right oxygen bed assembly (5) on output end of PSA assembly (2, figure 9-10). Torque to a value of 10.0 to 11.0 in.-lbs.

8. Install nitrogen check valves (CV3, CV4, and CV5) (paragraph 9-81).

9. Install oxygen check valves (CV1 and CV2) (paragraph 9-82).

10. Install labeled plastic tubing N_2 (59) to tube fitting (11) on tapped nipple (10) between left nitrogen bed assembly and right nitrogen bed assembly (3 and 4) on output end of the PSA assembly (2, figure 9-10).

11. Install labeled plastic tubing O_2 (60) to oxygen output port labeled with identification marker O_2 (51) on plenum assembly (ACC1) (2).

12. Install plastic crossover tubing (40) between left oxygen bed assembly and right oxygen bed assembly (6 and 5) on output end of PSA assembly (2, figure 9-10).

13. Install controller/monitor assembly (paragraph 9-83).

9-77. SHUTOFF VALVE/FILTER ASSEMBLY (V1/FLTR1) ASSEMBLY. To assemble the shutoff valve/filter assembly (V1/FLTR1) (1, figure 9-13), proceed as follows:

Materials Required

Quantity	Description	Reference Number
As Required	Compound Sealant	Loctite 222
As Required	Grease, Aircraft and Instrument, Fuel and Oxidizer Resistant	Christo-Lube or equivalent

Support Equipment Required

Quantity	Description	Reference Number
1	Wrench, Torque 0-30 in-lbs	TE3A
1	Wrench, Torque 0-150 in-lbs	TE12A
1	Spanner Socket Wrench	3309452-1

NOTE

Index numbers refer to figure 9-15 unless otherwise noted.

For installation of inlet filter (18) only, refer to steps 9 through 12.

1. Ensure shutoff valve base (1) is in the upright position.

2. Lightly lubricate new preformed packing (15) using Christo-Lube, then using spanner socket wrench install new filter assembly (14), with new preformed packing (15) attached, at the port labeled with identification marker IN (16) by tightening filter assembly (14) into the shutoff valve base (1). Torque to a value of 7.0 to 10.0 in.-lbs.

3. Ensure that the identification marker IN (16) at filter assembly (14) is readable and intact on the shutoff valve base (1). If not, replace as required.

4. Align shutoff cap (7) with tube fitting (13), spring (11) and shutoff diaphragm assembly (12), then position on shutoff valve base (1), align grooves on shutoff valve base (1) and shutoff cap (7). Apply sealing compound (Loctite 222) to six socket head capscrews (8). Install six socket head capscrews (8) with lockwashers (9) and flat washers (10). Torque to a value of 33.0 to 35.0 in.-lbs.

5. Ensure that the V1 label (17) on shutoff cap (7) is readable and intact. If not, replace as required.

6. Apply sealing compound (Loctite 222) to two jack studs (9, figure 9-14). Install two jack studs (9, figure 9-14) with flat washers (10, figure 9-14) to the shutoff cap (7).

7. Attach plain hex nut (20) to the filter rod (19), then install filter rod (19) with plain hex nut (20) attached to the shutoff valve base (1).

8. Lightly lubricate new preformed packing (3) using Christo-Lube, then install the inlet unit elbow (2) and new preformed packing (3) by installing two socket head capscrews (4), each with lockwasher (5) and flat washer (6).

9. Lightly lubricate new preformed packing (22) using Christo-Lube, then attach the filter element (18), new preformed packing (22), and swirler (21) to the shutoff valve base (1) by installing castellated plain nut (23) and cotter pin (24) at the end of the filter rod (19).

10. Lightly lubricate new preformed packing (13, figure 9-14) using Christo-Lube. Then position the shutoff valve and filter assembly (1, figure 9-14) and new preformed packing (13, figure 9-14) in the adapter and tube assembly (3, figure 9-14) from end opposite drain (12).

11. Install five flat washers (6, figure 9-14), lockwashers (5, figure 9-14) and plain hex nuts (7, figure 9-14) on three socket head capscrews (4, figure 9-14) and flat washers (6, figure 9-14) to couple the shutoff valve and filter assembly (1) to the adapter and tube assembly (3). Torque to a value of 10.0 to 11.0 in.-lbs.

12. Install shutoff valve/filter/regulator (reducer) assemblies (V1/FLTR1/REG1), refer to Shutoff Valve/Filter/Regulator (Reducer) Assemblies (V1/FLTR1/REG1) Installation (paragraph 9-79).

9-78. REDUCER ASSEMBLY (REG1) ASSEMBLY.

To assemble the reducer assembly (REG1) (2, figure 9-14), proceed as follows:

Materials Required

Quantity	Description	Reference Number
As Required	Compound Sealant	Loctite 222
As Required	Grease, Aircraft and Instrument, Fuel and Oxidizer Resistant	Christo-Lube or equivalent

Support Equipment Required

Quantity	Description	Reference Number
1	Wrench, Torque 0-30 in-lbs	TE3A
1	Wrench, Torque 0-150 in-lbs	TE12A

NOTE

Index numbers refer to figure 9-16 unless otherwise noted.

1. Assemble the diaphragm assembly (5) by aligning the diaphragm piston (4, figure 9-17), rolling diaphragm (3, figure 9-17), and diaphragm retainer plate (2, figure 9-17). Then place the regulator piston rod (1, figure 9-17), with sealing compound (Loctite 222) applied to threads, through the center hole from the diaphragm retainer plate (2, figure 9-17) side. Secure with flat washer (5, figure 9-17), lockwasher (6, figure 9-17), and plain hex nut (7, figure 9-17).

2. Ensure regulator base (1), with socket head capscrew (2) at test port labeled with identification marker TP1 (3), is in the upright position.

3. Ensure that identification marker TP1 (3) on the regulator base (1) is readable and intact. If not, replace as required.

4. Install the flanged bearing (4) in the regulator base (1) by slightly pressing the flanged bearing (4) into the regulator base (1).

5. Install the diaphragm assembly (5) in the regulator base (1) by sliding the regulator piston rod (1, figure 9-17) through the flanged bearing (4) into the regulator base (1).

6. Lightly lubricate new preformed packing (7) using Christo-Lube, then install on the regulator piston (6).

7. Install regulator piston (6) and preformed packing (7) to the regulator piston rod (1, figure 9-17), with threads coated with sealing compound (Loctite 222), of the diaphragm assembly (5) by installing plain hex nut (8) to the regulator piston rod (1, figure 9-17).

8. Slide deswirler (9) over the regulator piston (6) and preformed packing (7), then secure with four socket head capscrews (10), each with lockwasher (11) and flat washer (12). Torque to a value of 18.5 to 21.0 in.-lbs.

9. Align the spring cover (13) with setscrew (19), spring retainer (18), and spring (17), then attach to the regulator base (1) by installing six socket head capscrews (14), each with lockwasher (15) and flat washer (16). Torque to a value of 30.0 to 35.0 in.-lbs.

10. Lightly lubricate new preformed packing (13, figure 9-14) using Christo-Lube, then position the reducer assembly (2) and preformed packing (13) on the adapter and tube assembly (3).

11. Secure reducer assembly (2) to adapter and tube assembly (3) by installing five flat washers (6) and self-locking nuts (8). Torque to a value of 10.0 to 11.0 in.-lbs.

12. Ensure that the identification marker DRAIN (11) is readable and intact. If not, replace as required.

13. Ensure tube fitting (12) on the adapter and tube assembly (3) is open and undamaged. If not, replace as required.

14. Install shutoff valve/filter/regulator (reducer) assemblies (V1/FLTR1/REG1), refer to Shutoff Valve/Filter/Regulator (Reducer) Assemblies (V1/FLTR1/REG1) Installation (paragraph 9-79).

9-79. SHUTOFF VALVE/FILTER/REGULATOR (REDUCER) ASSEMBLIES (V1/FLTR1/REG1) INSTALLATION. To install shutoff valve/filter/regulator assemblies (V1/FLTR1/REG1) (6, figure 9-12), proceed as follows:

Materials Required

Quantity	Description	Reference Number
As Required	Grease, Aircraft and Instrument, Fuel and Oxidizer Resistant	Christo-Lube or equivalent

Support Equipment Required

Quantity	Description	Reference Number
1	Wrench, Torque 0-30 in-lbs	TE3A
1	Wrench, Torque 0-150 in-lbs	TE12A

NOTE

Index numbers refer to figure 9-12 unless otherwise noted.

1. Ensure PSA assembly (2, figure 9-10) is placed on a flat bench surface with bottom side down, then work from output end.

2. Remove tape or protective plug from the slide valve assembly (16) inlet hole.

3. Lightly lubricate new preformed packing (14) using Christo-Lube, then install preformed packing (14) in the input flange on the shutoff valve/filter/regulator assembly (16).

4. Install labeled plastic tubing DRAIN (40) onto the tube fitting (12, figure 9-14) at identification marker DRAIN (11, figure 9-14) on the bottom of the shutoff valve/filter/regulator assembly (16).

5. Install labeled plastic tubing V1 (61, figure 9-11) to port labeled with identification marker V1 (17, figure 9-15) on the input end of the shutoff valve/filter/regulator assembly (16).

6. Install labeled plastic tubing IN (58, figure 9-11) to the filter assembly (14, figure 9-15) tube fitting at port labeled with identification marker IN (16) on the input end of the shutoff valve/filter/regulator assembly (16).

7. Install two plain hex nuts (36, figure 9-11) on jack studs (9, figure 9-14). Slide jack studs (9, figure 9-14) on the inlet end of the shutoff valve/filter/regulator assembly (7, figure 9-11) into bed outlet support structure (1, figure 9-11), then set the inlet end of the shutoff valve/filter/regulator assembly (6) into place on the slide valve assembly (16).

8. Install two socket head capscrews (11), each with lockwasher (12) and flat washer (13), to couple the shutoff valve/filter/regulator assembly (6) to the slide valve assembly (16). Torque to a value of 54 to 57 in.-lbs.

9. Adjust two nuts (36, figure 9-11), previously installed on jack studs (9, figure 9-14) up to the bed outlet structure assembly (1, figure 9-11).

10. Install two flat washers (37, figure 9-11), lockwashers (38, figure 9-11), and nuts (36, figure 9-11) onto jack studs (9, figure 9-14) to hold shutoff valve/filter/regulator assembly (7, figure 9-11) to the bed outlet structure assembly (1, figure 9-11). Torque to a value of 10.0 to 11.0 in.-lbs.

11. Tighten clamping screw on band clamp (9, figure 9-13) holding the shutoff valve/filter/regulator assembly (7, figure 9-11) to the center structure assembly (5, figure 9-13).

9-80. PLENUM ASSEMBLY (ACC1) INSTALLATION. To install plenum assembly (ACC1) (2, figure 9-11), proceed as follows:

Support Equipment Required

Quantity	Description	Reference Number
1	Wrench, Torque 0-30 in-lbs	TE3A

NOTE

Index numbers refer to figure 9-11 unless otherwise noted.

1. Ensure PSA assembly (2, figure 9-10) is placed on a flat bench surface with left or right side down for access to the support stud on the closed end of plenum assembly (ACC1) (1, figure 9-12) and clamping screws on the band clamps (7, figure 9-13), then work from output end.

2. If the sticky-backed damping pad (66) was removed, install new damping pad (66) on output end of plenum assembly (ACC1) (2).

3. Place band clamps (7, figure 9-13) over plenum assembly (ACC1) (2), located to clamp center structure assembly (5, figure 9-13) and plenum retainer flange (67). Band clamps (7, figure 9-13) may need to be wiggled into a nonbinding position or loosened further to allow free movement over center structure assembly (5, figure 9-13) and plenum retainer flange (67).

4. Slowly place plenum assembly (ACC1) (2) into PSA assembly (2, figure 9-10), inserting the stud assembly on the closed end of plenum assembly (ACC1) (1, figure 9-12) into plenum mount bracket (47, figure 9-12) on the slide valve assembly (16, figure 9-12); then place the output end of plenum assembly (ACC1) (2) flush with plenum retainer flange (67).

5. Rotate PSA assembly (2, figure 9-10) on side, then install flat washer (10, figure 9-12), lockwasher (9, figure 9-12), and plain hex nut (8, figure 9-12) on the support stud on the closed end of plenum assembly (ACC1) (1, figure 9-12) finger tight.

6. Install oxygen check valves (CV1 and CV2) (paragraph 9-82).

7. Slide band clamp (7, figure 9-13) over plenum retainer flange (67), and place center band clamp (7, figure 9-13) over edge of center structure assembly (5, figure 9-13). Tighten clamping screw on both band clamps (7, figure 9-13) on plenum assembly (ACC1) (2, figure 9-13). The band clamp (7, figure 9-13) should be tight enough to prevent movement of plenum assembly (ACC1) (2, figure 9-13).

8. Install the nitrogen check valves (CV3, CV4 and CV5) (paragraph 9-81).

9. Install labeled plastic tubing O_2 (60) to the oxygen output port labeled with identification marker O_2 (51) on plenum assembly (ACC1) (2).

10. Torque plain hex nut (8, figure 9-12), lockwasher (9, figure 9-12), and flat washer (10, figure 9-12) on the support stud on the closed end of plenum assembly (ACC1) (1, figure 9-12) to a value of 4.0 to 6.0 in-lbs.

11. Install remaining plastic tubing previously removed.

12. Install controller/monitor assembly (paragraph 9-83).

9-81. NITROGEN CHECK VALVES (CV3, CV4, AND CV5) INSTALLATION. To install nitrogen check valves (CV3, CV4 and CV5) assembly, proceed as follows:

Materials Required

Quantity	Description	Reference Number
As Required	Grease, Aircraft and Instrument, Fuel and Oxidizer Resistant	Christo-Lube or equivalent

Support Equipment Required

Quantity	Description	Reference Number
1	Wrench, Torque 0-30 in-lbs	TE3A

NOTE

Index numbers refer to figure 9-11 unless otherwise noted.

1. Ensure PSA assembly (2, figure 9-10) is placed on a flat bench surface with bottom side down, then work from output end.

2. Remove protective cap plugs (NAS834-53) from the nitrogen bed (3 and 4) outlets.

3. Lightly lubricate new preformed packing (46 and 48) using Christo-Lube.

4. Install check valve (CV3) (45) with preformed packing (46) and check valve (CV4) (47) with preformed packing (48), then install cover and tube (9), tapped nipple (10) with tube fitting (11), and check valve assembly (CV5) (8).

5. Install four socket head capscrews (12), each with lockwasher (13) and flat washer (14), to the check valve assembly (CV5) (8) on the right nitrogen bed assembly (3) finger tight.

6. Install four socket head capscrews (15), each with lockwasher (16) and flat washer (17), to the cover and tube fitting (9) of the left nitrogen bed assembly (4) finger tight.

CAUTION

When tightening flared fittings on cover and tube (9) and check valve assembly (CV5) (8) onto tapped nipple (10) be careful not to damage tube fitting (11) on tapped nipple (10).

7. Tighten two coupling nuts on the cover tube (9) and the check valve assembly (CV5) (8) with tapped nipple (10) between then below plenum assembly (ACC1) (2), then torque four socket head capscrews (12) and four socket head capscrews (15) to a value of 18.5 to 21.0 in.-lbs.

9-82. OXYGEN CHECK VALVES (CV1 AND CV2) INSTALLATION. To install oxygen check valves (CV1 and CV2), proceed as follows:

Materials Required

Quantity	Description	Reference Number
As Required	Grease, Aircraft and Instrument, Fuel and Oxidizer Resistant	Christo-Lube or equivalent

Support Equipment Required

Quantity	Description	Reference Number
1	Wrench, Torque 0-30 in-lbs	TE3A

NOTE

Index numbers refer to figure 9-11 unless otherwise noted.

1. Ensure PSA assembly (2, figure 9-10) is placed on a flat bench surface with bottom side down, then work from output end.

NOTE

Ensure filters (21 and 28) are inserted into plenum (2) ports labeled with identification markers FLTR3 and FLTR4 (52 and 53).

2. Install coupling nut (19) on the left oxygen tube (18) and coupling nut (26) on the right oxygen tube (25) at plenum assembly (ACC1) (2) inlets FLTR3 and FLTR4, finger tight.

3. Remove protective cap plugs (NAS834-53) from the oxygen bed outlets.

4. Lightly lubricate new preformed packing (34 and 44) using Christo-Lube, then install on spacer (35) and check valve (CV2) (43).

5. Install check valve (CV2) with preformed packing (44) and spacer (35) with preformed packing (34) into the opening of the right oxygen bed assembly (5), then install the right oxygen tube (25) with outlet fitting (33).

6. Install four socket head capscrews (29), each with lockwasher (30) and flat washer (31), in the right outlet fitting of oxygen bed assembly (5) finger tight.

7. Lightly lubricate new preformed packing (42) using Christo-Lube, then install on check valve (CV1) (41).

8. Install check valve (CV1) (41) with preformed packing (42) into the opening of the left oxygen bed assembly (6), then install the left oxygen tube and outlet fitting (32).

9. Install four socket head capscrews (22), each with lockwasher (23) and flat washer (24), in the left outlet fitting of oxygen bed assembly (6).

10. Torque coupling nut (19) on the left oxygen tube (18) and coupling nut (26) on the right oxygen tube (25) to 200 to 225 in.-lbs., then torque four socket head capscrews (22) and four socket head capscrews (29) to a value of 18.5 to 21.0 in.-lbs.

9-83. CONTROLLER/MONITOR ASSEMBLY INSTALLATION. To install the controller/monitor assembly (1, figure 9-10), proceed as follows:

Materials Required

Quantity	Description	Reference Number
As Required	Grease, Aircraft and Instrument, Fuel and Oxidizer Resistant	Christo-Lube or equivalent

NOTE

Index numbers refer to figure 9-10 unless otherwise noted.

1. Ensure PSA assembly (2) is placed on a flat bench surface with bottom side down, then work from output end.

2. Align the controller/monitor assembly (1) on the bed outlet structure assembly (11), then tighten four front-accessible captive socket head mounting screws (9).

3. Tighten captive socket head mounting screw (10) to back of the bed outlet structure assembly near the top of controller/monitor assembly (1).

4. Remove socket head capscrew (3), with flat washer (4) and lockwasher (5), and move grounding strap assembly (6) into position over socket head capscrew (3) opening. Replace socket head capscrew (3), lockwasher (5), and flat washer (4).

5. Ensure that eight preformed packings (10, figure 9-18) and preformed packing (12, figure 9-18) have been lightly lubricated, using Christo-Lube, on tube fitting disc assembly (7).

6. Install tube fitting disc assembly (7) to back of the controller/monitor assembly (2) by aligning tube fitting disc assembly (7) with opening on back of controller/monitor assembly (2), then tightening captive screw (8) to draw the tube fitting disc assembly (7) into controller/monitor assembly (2).

9-84. SCHEDULED MAINTENANCE.

9-85. REPLACEMENT OF INLET FILTER ELEMENT. Prior to testing or repair of the concentrator or after 500 flight hours of service life, remove and replace the inlet filter element. Refer to Shutoff Valve/Filter Assembly (V1/FLTR1) Disassembly (paragraph 9-54) and Shutoff Valve/Filter Assembly (V1/FLTR1) Assembly (paragraph 9-77) for instructions.

Section 9-5. Illustrated Parts Breakdown

9-86. GENERAL.

9-87. This section lists and illustrates the assemblies and detail parts of the O_2N_2 Concentrator, Type GGU-xx/A, P/N 3261129-0101 and 3261129-0102, manufactured by Litton Systems, Inc. (CAGE 99251).

9-88. The Illustrated Parts Breakdown should be used during maintenance when requisitioning and identifying parts.

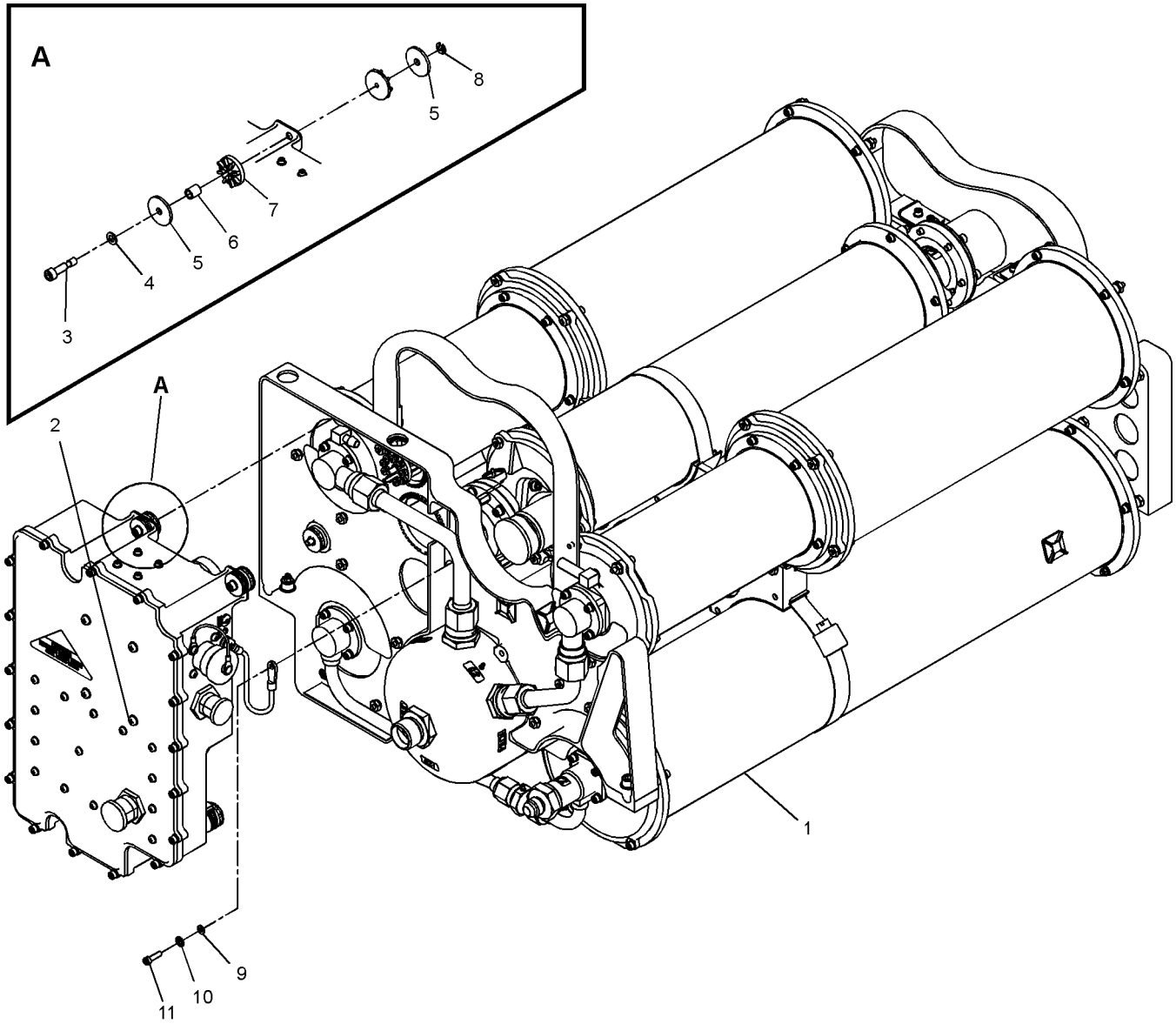

009019

Figure 9-19. O_2N_2 Concentrator, Type GGU-xx/A, P/NS 3261129-0101 and 3261129-0102 (Product Output End)

Figure and Index Number	Part Number	Description 1 2 3 4 5 6 7	Units Per Assembly	Usable On Code
9-19	3261129-0102	CONCENTRATOR, O_2N_2 MOLECULAR . . . . . . SIEVE (GGU-xx/A)	REF	A
	3261129-0101	CONCENTRATOR, O_2N_2 MOLECULAR . . . . . . SIEVE (GGU-xx/A) SN 11 and above	REF	B
	3261129-0101	CONCENTRATOR, O_2N_2 MOLECULAR . . . . . . SIEVE (GGU-xx/A) SN 10 and below	REF	C
	1656577-1	. CONCENTRATOR ASSEMBLY	REF	A
	1653800-1	. CONCENTRATOR ASSEMBLY	REF	B,C
-1	1656576-1	. . PRESSURE SWING ADSORPTION UNIT . . . (BREAKDOWN, Figure 9-20)	1	A
-1	1653710-1	. . PRESSURE SWING ADSORPTION UNIT . . . (BREAKDOWN, Figure 9-20)	1	B,C
-2	1653700-1	. . CONTROLLER/MONITOR ASSEMBLY . . . . (ATTACHING PARTS)	1	
-3	1653879-1	. . . SCREW, Captive, Damper	4	
-4	NAS620-8	. . . WASHER, Flat	4	
-5	1653878-1	. . . RETAINER, Isolation Damper	8	
-6	1654017-1	. . . SLEEVE	4	
-7	G-431-1	. . . GROMMET, Vibration Damping . . . . . . (1M331) (VID 1653873-1)	4	
-8	MS16633-1015	. . . RING, Retaining, External	4	
-9	NAS620-6	. . WASHER, Flat	1	
-10	MS35335-30	. . WASHER, Lock	1	
-11	NAS1352-06-8P	. . SCREW, Cap, Socket Head . . . . . . ---*---	1	

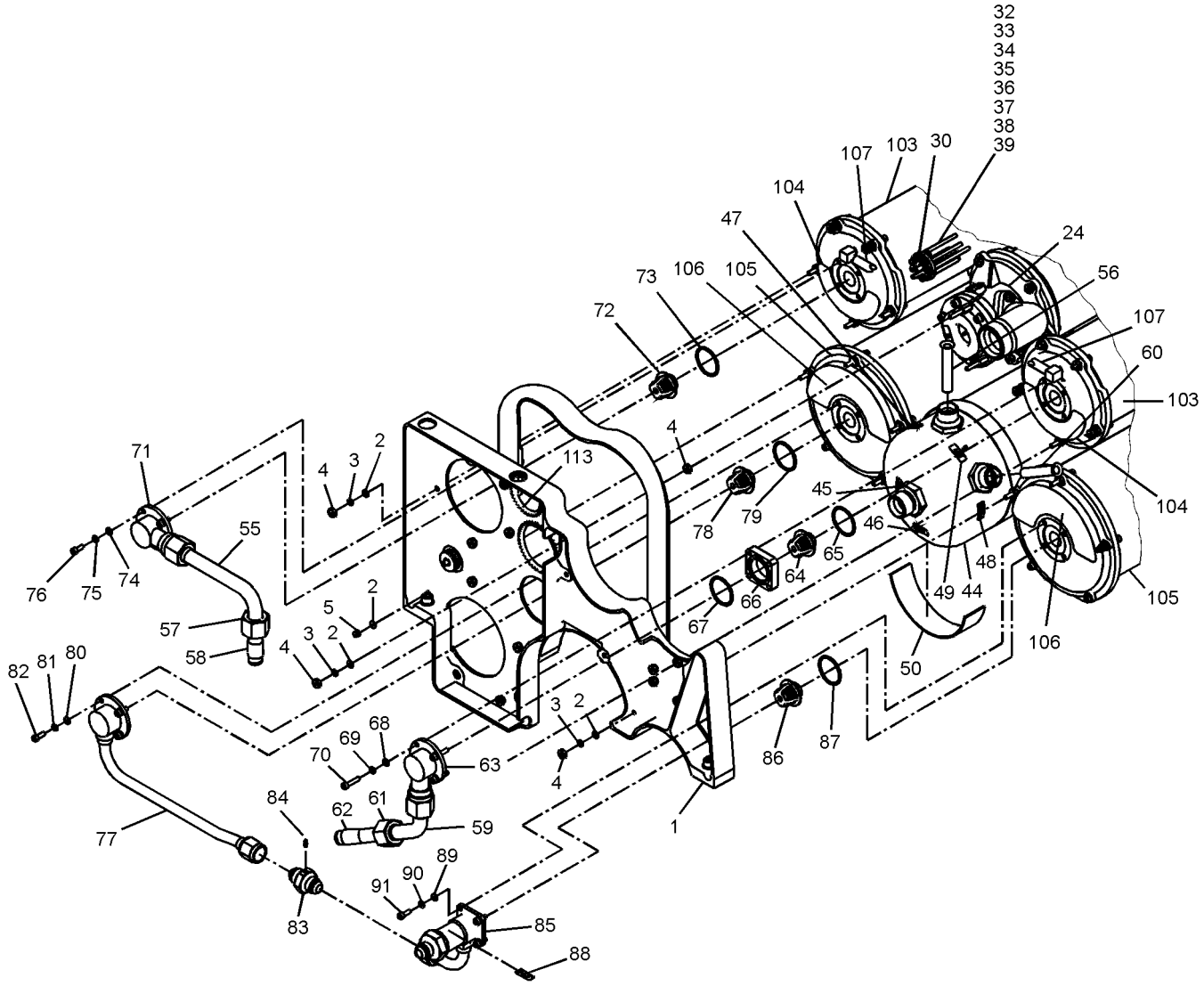

00902001

Figure 9-20. Pressure Swing Adsorption Unit, P/N 1653710-1 (Product Output End) (Sheet 1 of 3)

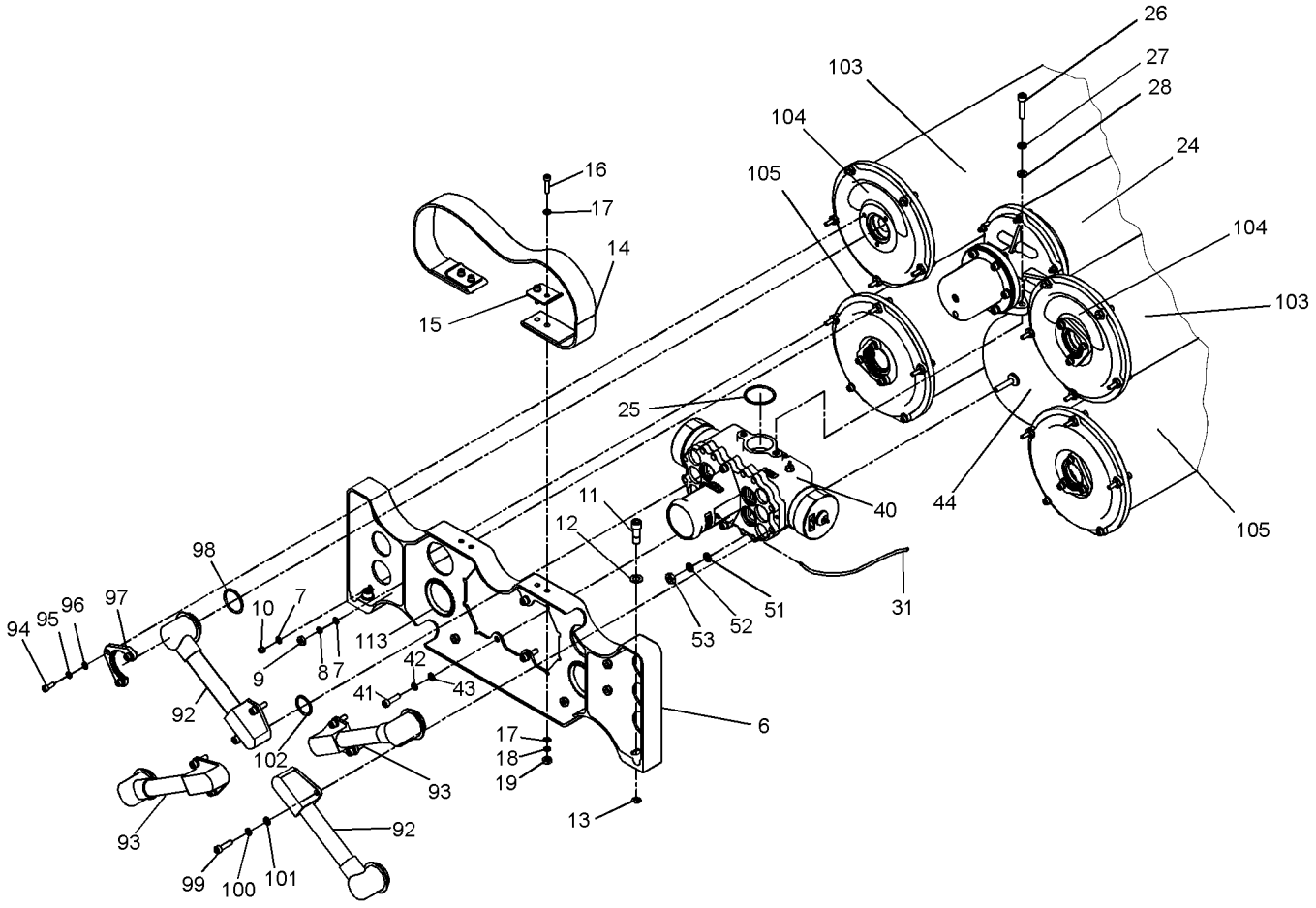

00902002

Figure 9-20. Pressure Swing Adsorption Unit, P/N 1653710-1 (Center) (Sheet 2 of 3)

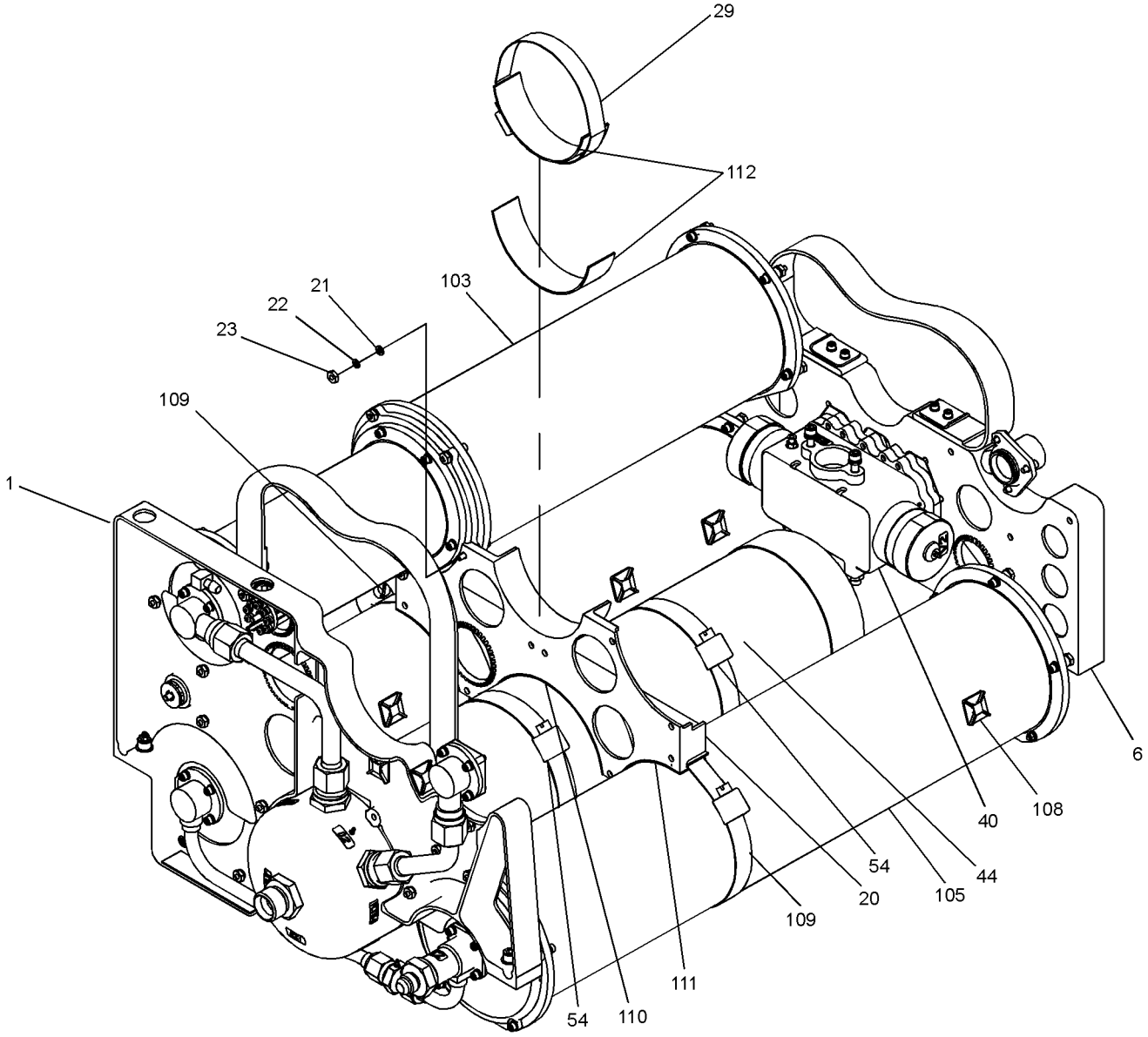

00902003

Figure 9-20. Pressure Swing Adsorption Unit, P/N 1653710-1 (Exhaust End) (Sheet 3 of 3)

Figure and Index Number	Part Number	Description 1 2 3 4 5 6 7	Units Per Assembly	Usable On Code
9-20	3261129-0102	CONCENTRATOR, O_2N_2 MOLECULAR SIEVE (GGU-xx/A)	REF	A
	3261129-0101	CONCENTRATOR, O_2N_2 MOLECULAR SIEVE (GGU-xx/A) SN 11 and above	REF	B
	3261129-0101	CONCENTRATOR, O_2N_2 MOLECULAR SIEVE (GGU-xx/A) SN 10 and below	REF	C
	1656577-1	CONCENTRATOR ASSEMBLY	REF	A
	1653800-1	CONCENTRATOR ASSEMBLY	REF	B,C
	1656576-1	PRESSURE SWING ADSORPTION UNIT	REF	A
	1653710-1	PRESSURE SWING ADSORPTION UNIT	REF	B,C
-1	1653714-1	. STRUCTURE ASSEMBLY, Bed Outlet (BREAKDOWN, Figure 9-26) (ATTACHING PARTS)	1	
-2	NAS620-6	. WASHER, Flat	17	
-3	MS35338-41	. WASHER, Lock	15	
-4	MS35649-262	. NUT, Plain, Hex	17	
-5	MS21042-06	. NUT, Self-Locking ---*---	2	
-6	1653715-1	. STRUCTURE ASSEMBLY, Bed Inlet (ATTACHING PARTS)	1	
-7	NAS620-6	. WASHER, Flat	12	
-8	MS35338-41	. WASHER, Lock	10	
-9	MS35649-262	. NUT, Plain, Hex	10	
-10	MS21042-06	. NUT, Self-Locking ---*---	2	
-11	1654016-1	. . SCREW, Captive	2	
-12	NAS620-416L	. . WASHER, Flat	2	
-13	MS16633-4018	. . RING, Retaining, External	2	
-14	1653872-1	. STRAP, Lifting	1	
-15	1653851-1	. PLATE, Strap	2	
-16	NAS1352-06-10P	. SCREW, Cap, Socket Head	4	
-17	NAS620-6	. WASHER, Flat	8	
-18	MS35338-41	. WASHER, Lock	4	
-19	MS35649-262	. NUT, Plain, Hex	4	
-20	1653716-1	. STRUCTURE ASSEMBLY, Center (ATTACHING PARTS)	1	
-21	NAS620-6	. WASHER, Flat	4	
-22	MS35338-41	. WASHER, Lock	4	
-23	MS35649-262	. NUT, Plain, Hex ---*---	4	
-24	1653720-1	. SHUTOFF VALVE/FILTER/REGULATOR ASSEMBLY (BREAKDOWN, Figure 9-21)	1	
-25	AS3582-023	. PACKING, Preformed (ATTACHING PARTS)	1	
-26	NAS1351-3-14P	. SCREW, Cap, Socket Head	2	
-27	MS35338-43	. WASHER, Lock	2	
-28	NAS620-10	. WASHER, Flat	2	

Figure and Index Number	Part Number	Description 1 2 3 4 5 6 7	Units Per Assembly	Usable On Code
9-20-29	MS35842-15	. CLAMP, Band	1	
		---*---		
30	1653870-1	. DISC ASSEMBLY	1	
		(BREAKDOWN, Figure 9-25)		
-31	1653845-1	. TUBING, Plastic-Labeled DRAIN	1	
-32	1653845-2	. TUBING, Plastic-Labeled IN	1	
-33	1653845-3	. TUBING, Plastic-Labeled N_2	1	
-34	1653845-4	. TUBING, Plastic-Labeled O_2	1	
-35	1653845-5	. TUBING, Plastic-Labeled V1	1	
-36	1653845-6	. TUBING, Plastic-Labeled V2	1	
-37	1653845-7	. TUBING, Plastic-Labeled V2	1	
-38	1653845-8	. TUBING, Plastic-Labeled REG	1	
-39	1653845-9	. TUBING, Plastic-Labeled EXH	1	
-40	1656575-1	. VALVE, ASSEMBLY, Slide	1	A
-40	1655046-1	. VALVE, ASSEMBLY, Slide	1	B
		(ATTACHING PARTS)		
-41	NAS1352-08-10P	. SCREW, Cap, Socket Head	4	
-42	MS35338-42	. WASHER, Lock	4	
-43	NAS620-8	. WASHER, Flat	4	
		---*---		
-44	1653711-1	. PLENUM ASSEMBLY	1	
-45	1653900-11	. . MARKER, Identification O_2 OUT	1	
-46	1653900-12	. . MARKER, Identification ACC1	1	
-47	1653900-13	. . MARKER, Identification FLTR3	1	
-48	1653900-14	. . MARKER, Identification FLTR4	1	
-49	1653900-6	. . MARKER, Identification O_2	1	
-50	1654250-1	. . PAD, Damping	1	
		(ATTACHING PARTS)		
-51	NAS620-10	. WASHER, Flat	1	
-52	MS35338-43	. WASHER, Lock	1	
-53	MS35649-202	. NUT, Plain, Hex	1	
-54	A-A-52506TYHD512	. CLAMP, Band	2	
		---*---		
-55	1653712-1	. TUBE, Oxygen, Left	1	
-56	1653876-1	. FILTER ELEMENT, Flareless	1	
-57	MS21921-8D	. NUT, Sleeve Coupling, Flareless	2	
-58	MS21922-8	. SLEEVE COUPLING, Flareless	2	
-59	1653713-1	. TUBE, Oxygen, Right	1	
-60	1653876-1	. FILTER ELEMENT, Flareless	1	
-61	MS21921-8D	. NUT, Sleeve Coupling, Flareless	2	
-62	MS21922-8	. SLEEVE COUPLING, Flareless	2	
-63	1653629-1	. FITTING, Outlet	1	
-64	1632955-5	. VALVE ASSEMBLY, Check	1	
-65	AS3582-022	. PACKING, Preformed	1	
-66	1653871-1	. SPACER, Outlet, O_2	1	
-67	AS3582-022	. PACKING, Preformed	1	
		(ATTACHING PARTS)		
-68	NAS620-6	. WASHER, Flat	4	

Figure and Index Number	Part Number	Description 1 2 3 4 5 6 7	Units Per Assembly	Usable On Code
9-20-69	MS35338-41	. WASHER, Lock	4	
-70	NAS1352-06-10P	. SCREW, Cap, Socket Head	4	
		---*---		
-71	1653629-1	. FITTING, Outlet	1	
-72	1632955-5	. VALVE ASSEMBLY, Check	1	
-73	AS3582-022	. PACKING, Preformed	1	
		(ATTACHING PARTS)		
-74	NAS620-6	. WASHER, Flat	4	
-75	MS35338-41	. WASHER, Lock	4	
-76	NAS1352-06-6P	. SCREW, Cap, Socket Head	4	
		---*---		
-77	1653708-1	. COVER AND TUBE	1	
-78	1632955-5	. VALVE ASSEMBLY, Check	1	
-79	AS3582-022	. PACKING, Preformed	1	
		(ATTACHING PARTS)		
-80	NAS620-6	. WASHER, Flat	4	
-81	MS35338-41	. WASHER, Lock	4	
-82	NAS1352-06-6P	. SCREW, Cap, Socket Head	4	
		---*---		
-83	1653875-1	. NIPPLE, Tapped	1	
-84	1643873-1	. FITTING, Tube	1	
-85	1653860-1	. VALVE ASSEMBLY, Check	1	
-86	1632955-5	. VALVE ASSEMBLY, Check	1	
-87	AS3582-022	. PACKING, Preformed	1	
-88	1653900-5	. MARKER, Identification N_2	1	
		(ATTACHING PARTS)		
-89	NAS620-6	. WASHER, Flat	4	
-90	MS35338-41	. WASHER, Lock	4	
-91	NAS1352-06-6P	. SCREW, Cap, Socket Head	4	
		---*---		
-92	1653706-1	. ELBOWS AND TUBE	2	
-93	1653707-1	. ELBOWS AND TUBE	2	
		(ATTACHING PARTS)		
-94	NAS1352-06-6P	. SCREW, Cap, Socket Head	12	
-95	MS35338-41	. WASHER, Lock	12	
-96	NAS620-6	. WASHER, Flat	12	
-97	1646889-3	. RETAINER, Elbow	4	
-98	AS3582-020	. PACKING, Preformed	4	
-99	NAS1352-08-10P	. SCREW, Cap, Socket Head	8	
-100	MS35338-42	. WASHER, Lock	8	
-101	NAS620-6	. WASHER, Flat	8	
-102	AS3582-017	. PACKING, Preformed	4	
		---*---		
-103	1601381-1	. REPAIR SET, Concentrator, Bed Assembly, O_2	1	
	1653750-1	. . BED ASSEMBLY, Oxygen, Left	REF	
	1653760-1	. . BED ASSEMBLY, Oxygen, Right	REF	
-104	1647059-1	. . MARKER, Identification - Warning	4	
-105	1601382-1-1	. REPAIR SET, Concentrator, Bed Assembly, N_2	1	

Figure and Index Number	Part Number	Description 1 2 3 4 5 6 7	Units Per Assembly	Usable On Code
9-20-	1653770-1	. . BED ASSEMBLY, Nitrogen, Left	REF	
	1653780-1	. . BED ASSEMBLY, Nitrogen, Right	REF	
-106	1647060-1	. . MARKER, Identification - Warning	2	
-107	1646946-3	. TUBING, Plastic-Labeled 14.5 Inch	1	
-108	1648601-1	. CLEAT, Cable Tie, Adhesive Mount	7	
-109	A-A-52506TYHD512	. CLAMP, Band	2	
-110	1653796-2	. PAD, Damping	2	
-111	1653796-3	. PAD, Damping	4	
-112	1653796-4	. PAD, Damping	2	
-113	MS21266-2N	. GROMMET, Plastic, Edging	AR	

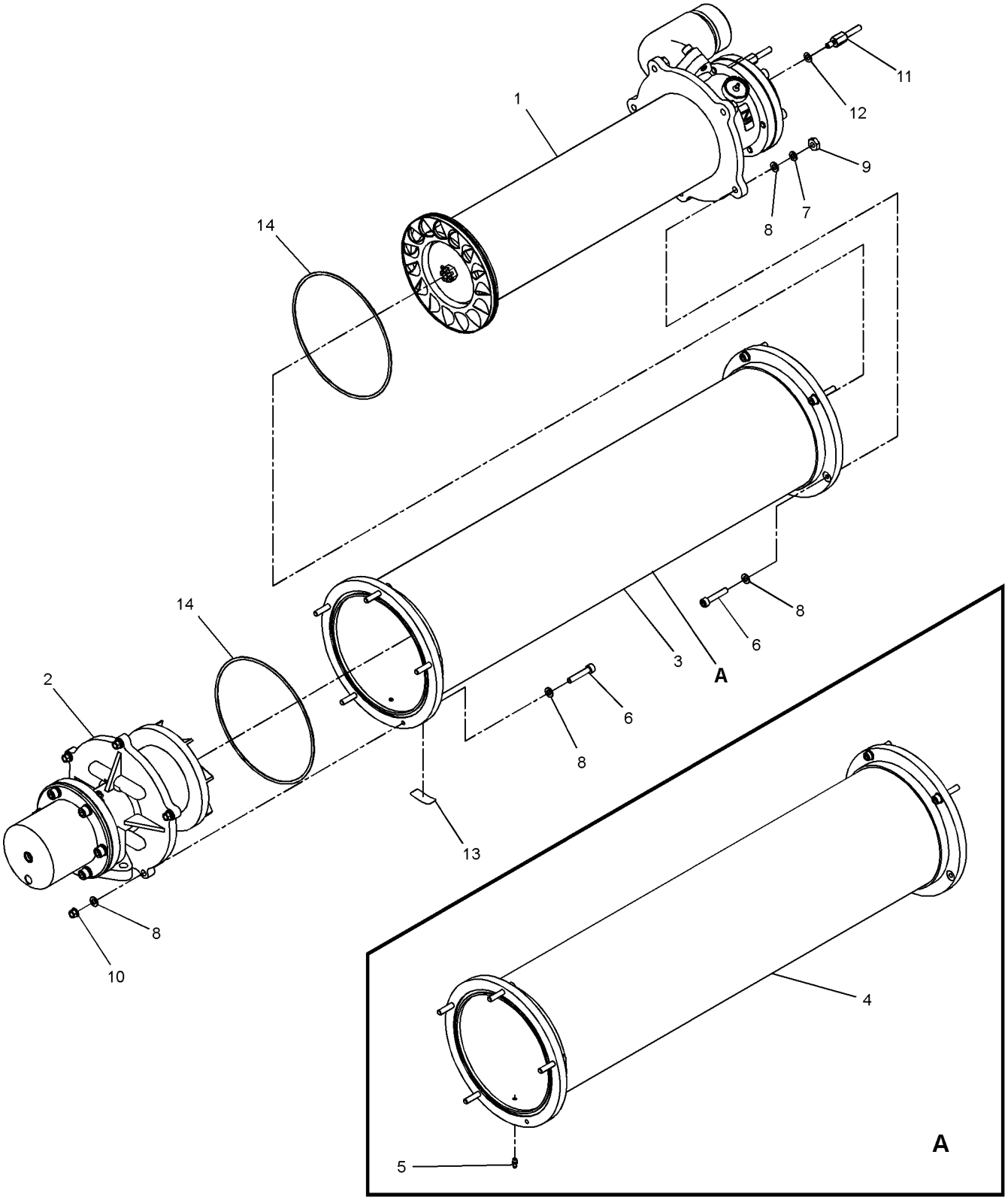

Figure 9-21. Shutoff Valve/Filter/Regulator Assembly, P/N 1653720-1

Figure and Index Number	Part Number	Description 1 2 3 4 5 6 7	Units Per Assembly	Usable On Code
9-21	3261129-0102	CONCENTRATOR, O_2N_2 MOLECULAR . . . . . . SIEVE (GGU-xx/A)	REF	A
	3261129-0101	CONCENTRATOR, O_2N_2 MOLECULAR . . . . . . SIEVE (GGU-xx/A) SN 11 and above	REF	B
	3261129-0101	CONCENTRATOR, O_2N_2 MOLECULAR . . . . . . SIEVE (GGU-xx/A) SN 10 and below	REF	C
	1656577-1	CONCENTRATOR ASSEMBLY	REF	A
	1653800-1	CONCENTRATOR ASSEMBLY	REF	B,C
	1656576-1	PRESSURE SWING ADSORPTION UNIT	REF	A
	1653710-1	PRESSURE SWING ADSORPTION UNIT	REF	B,C
	1653720-1	SHUTOFF VALVE/FILTER/REGULATOR . . . . . . ASSEMBLY (NHA, Figure 9-20)	REF	
-1	1653695-1	. SHUTOFF VALVE AND FILTER . . . . . . ASSEMBLY (BREAKDOWN, Figure 9-22)	1	
-2	1653696-1	. REDUCER ASSEMBLY . . . . . . (BREAKDOWN, Figure 9-23)	1	
-3	1653785-1	. ADAPTER and TUBE ASSEMBLY, ... Shutoff/Filter/Reg	1	
-4	1657455-1	. . ADAPTER and TUBE ASSEMBLY	1	
-5	1643873-1	. . FITTING, Tube . . . . . . (ATTACHING PARTS)	1	
-6	NAS1352-06-12P	. SCREW, Cap, Socket Head	10	
-7	MS35338-41	. WASHER, Lock	5	
-8	NAS620-6	. WASHER, Flat	20	
-9	MS35649-262	. NUT, Plain, Hex	5	
-10	MS21042-06	. NUT, Self-Locking . . . . . . ---*---	5	
-11	1653778-1	. STUD, Jack	2	
-12	NAS620-6L	. WASHER, Flat	2	
-13	1653900-1	. MARKER, Identification DRAIN	1	
-14	1646896-1	. PACKING, Preformed	2	

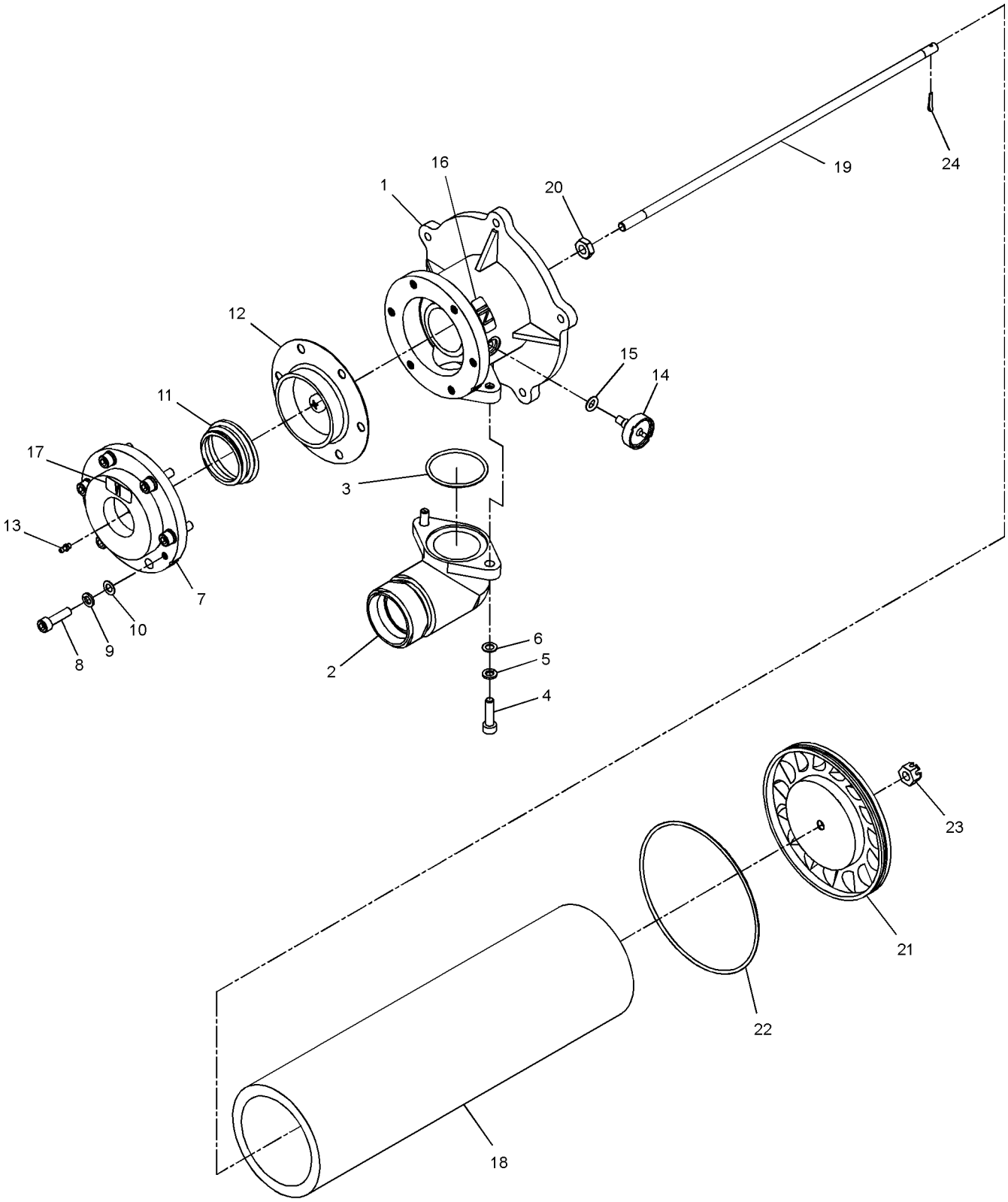

Figure 9-22. Shutoff Valve and Filter Assembly, P/N 1653695-1

Figure and Index Number	Part Number	Description 1 2 3 4 5 6 7	Units Per Assembly	Usable On Code
9-22	3261129-0102	CONCENTRATOR, O_2N_2 MOLECULAR SIEVE (GGU-xx/A)	REF	A
	3261129-0101	CONCENTRATOR, O_2N_2 MOLECULAR SIEVE (GGU-xx/A) SN 11 and above	REF	B
	3261129-0101	CONCENTRATOR, O_2N_2 MOLECULAR SIEVE (GGU-xx/A) SN 10 and below	REF	C
	1656577-1	CONCENTRATOR ASSEMBLY	REF	A
	1653800-1	CONCENTRATOR ASSEMBLY	REF	B,C
	1656576-1	PRESSURE SWING ADSORPTION UNIT	REF	A
	1653710-1	PRESSURE SWING ADSORPTION UNIT	REF	B,C
	1653720-1	SHUTOFF VALVE/FILTER/REGULATOR ASSEMBLY (NHA, Figure 9-20)	REF	
	1653695-1	SHUTOFF VALVE and FILTER ASSEMBLY (NHA, Figure 9-21)	REF	
-1	1653783-1	. BASE, Valve, Shutoff	1	
-2	1653765-1	. ELBOW, Unit, Inlet	1	
-3	AS3582-024	. PACKING, Preformed (ATTACHING PARTS)	1	
-4	NAS1352C08-10	. SCREW, Cap, Socket Head	2	
-5	MS35338-137	. WASHER, Lock	2	
-6	NAS620C8L	. WASHER, Flat ---*---	2	
-7	1653784-1	. CAP, Shutoff (ATTACHING PARTS)	1	
-8	NAS1352C08-10	. SCREW, Cap, Socket Head	6	
-9	MS35338-137	. WASHER, Lock	6	
-10	NAS620C8L	. WASHER, Flat ---*---	6	
-11	1646820-1	. SPRING, Conical	1	
-12	1647153-2	. DIAPHRAGM ASSEMBLY, Shutoff	1	
-13	1643873-1	. FITTING, Tube	1	
-14	1653335-1	. FILTER ASSEMBLY	1	
-15	AS3582-008	. PACKING, Preformed	1	
-16	1653900-4	. MARKER, Identification IN	1	
-17	1653900-8	. MARKER, Identification V1	1	
-18	200-35-DX	. FILTER, Element (51440) (VID 1653782-1)	1	
-19	1653776-1	. ROD, Filter	1	
-20	MS35649-204	. NUT, Plain, Hex	1	
-21	1649321-1	. SWIRLER	1	
-22	AS3582-042	. PACKING, Preformed	1	
-23	AN310C3	. NUT, Plain, Castellated	1	
-24	MS24665-1011	. PIN, Cotter	1	

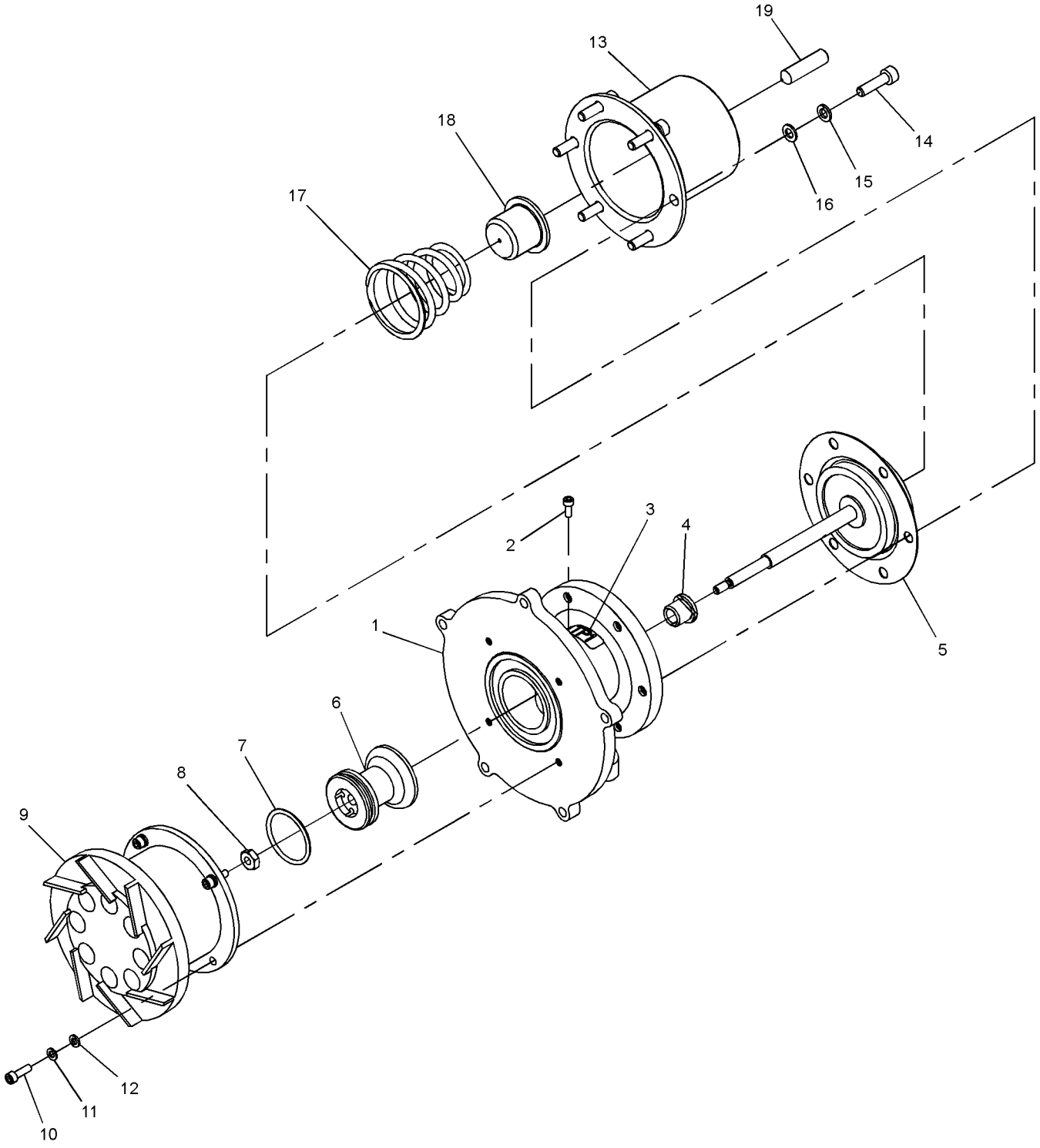

009023

Figure 9-23. Reducer Assembly, P/N 1653696-1

Figure and Index Number	Part Number	Description 1 2 3 4 5 6 7	Units Per Assembly	Usable On Code
9-23	3261129-0102	CONCENTRATOR, O_2N_2 MOLECULAR . . . . . . SIEVE (GGU-xx/A)	REF	A
	3261129-0101	CONCENTRATOR, O_2N_2 MOLECULAR . . . . . . SIEVE (GGU-xx/A) SN 11 and above	REF	B
	3261129-0101	CONCENTRATOR, O_2N_2 MOLECULAR . . . . . . SIEVE (GGU-xx/A) SN 10 and below	REF	C
	1656577-1	CONCENTRATOR ASSEMBLY	REF	A
	1653800-1	CONCENTRATOR ASSEMBLY	REF	B,C
	1656576-1	PRESSURE SWING ADSORPTION UNIT	REF	A
	1653710-1	PRESSURE SWING ADSORPTION UNIT	REF	B,C
	1653720-1	SHUTOFF VALVE/FILTER/REGULATOR . . . . . . ASSEMBLY (NHA, Figure 9-20)	REF	
	1653696-1	REDUCER ASSEMBLY (NHA, Figure 9-21)	REF	
-1	1653786-1	. BASE, Regulator	1	
-2	NAS1351-03-4P	. SCREW, Cap, Socket Head	1	
-3	1653900-10	. MARKER, Identification TP1	1	
-4	1643187-2	. BEARING, Flanged	1	
-5	1647152-1	. DIAPHRAGM ASSEMBLY . . . . . . (BREAKDOWN, Figure 9-24)	1	
-6	1646814-2	. PISTON, Regulator	1	
-7	AS3582-020	. PACKING, Preformed . . . . . . (ATTACHING PARTS)	1	
-8	MS35649-262	. NUT, Plain, Hex . . . . . . ---*---	1	
-9	1646394-1	. DESWIRLER . . . . . . (ATTACHING PARTS)	1	
-10	NAS1352C04-6	. SCREW, Cap, Socket Head	4	
-11	MS35338-135	. WASHER, Lock	4	
-12	NAS620C4	. WASHER, Flat . . . . . . ---*---	4	
-13	1653787-1	. COVER, Spring . . . . . . (ATTACHING PARTS)	1	
-14	NAS1352-08-10P	. SCREW, Cap, Socket Head	6	
-15	MS35338-42	. WASHER, Lock	6	
-16	NAS620C8	. WASHER, Flat . . . . . . ---*---	6	
-17	1653850-1	. SPRING, Conical	1	
-18	1653643-1	. RETAINER, Spring	1	
-19	AN565D428H16	. SETSCREW	1	

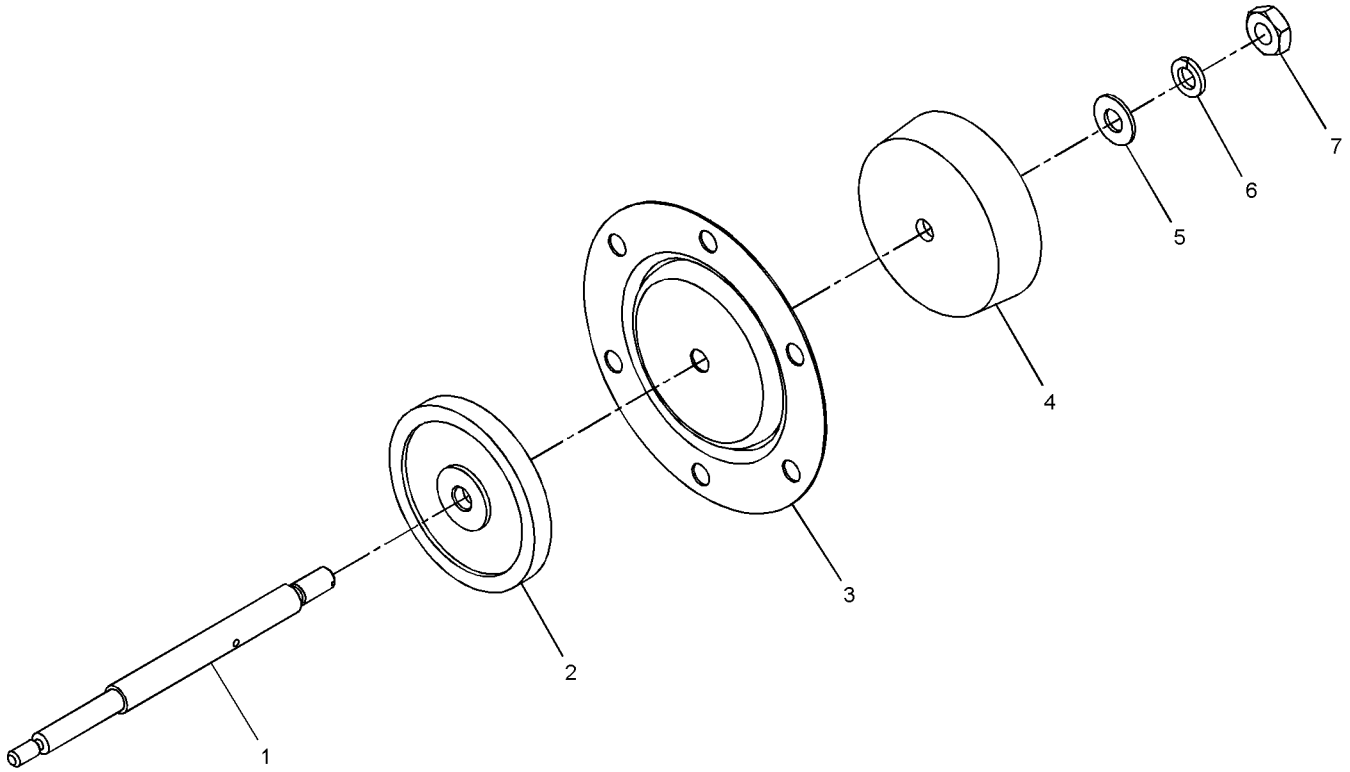

009024

Figure 9-24. Diaphragm Assembly, P/N 1647152-1

Figure and Index Number	Part Number	Description 1 2 3 4 5 6 7	Units Per Assembly	Usable On Code
9-24	3261129-0102	CONCENTRATOR, O_2N_2 MOLECULAR . . . . . SIEVE (GGU-xx/A)	REF	A
	3261129-0101	CONCENTRATOR, O_2N_2 MOLECULAR . . . . . SIEVE (GGU-xx/A) SN 11 and above	REF	B
	3261129-0101	CONCENTRATOR, O_2N_2 MOLECULAR . . . . . SIEVE (GGU-xx/A) SN 10 and below	REF	C
	1656577-1	CONCENTRATOR ASSEMBLY	REF	A
	1653800-1	CONCENTRATOR ASSEMBLY	REF	B,C
	1656576-1	PRESSURE SWING ADSORPTION UNIT	REF	A
	1653710-1	PRESSURE SWING ADSORPTION UNIT	REF	B,C
	1653720-1	SHUTOFF VALVE/FILTER/REGULATOR . . . . . ASSEMBLY (NHA, Figure 9-20)	REF	
	1653696-1	REDUCER ASSEMBLY (NHA, Figure 9-21)	REF	
	1647152-1	DIAPHRAGM ASSEMBLY (NHA, Figure 9-23) . . .	REF	
-1	1646815-2	. ROD, Regulator Piston	1	
-2	1646810-1	. PLATE, Retainer, Diaphragm	1	
-3	1646809-1	. DIAPHRAGM, Rolling	1	
-4	1646808-1	. PISTON, Diaphragm	1	
-5	AN960C10L	. WASHER, Flat	1	
-6	MS35338-138	. WASHER, Lock . . . . . (ATTACHING PARTS)	1	
-7	MS35650-304	. NUT, Plain, Hex . . . . . ---*---	1	

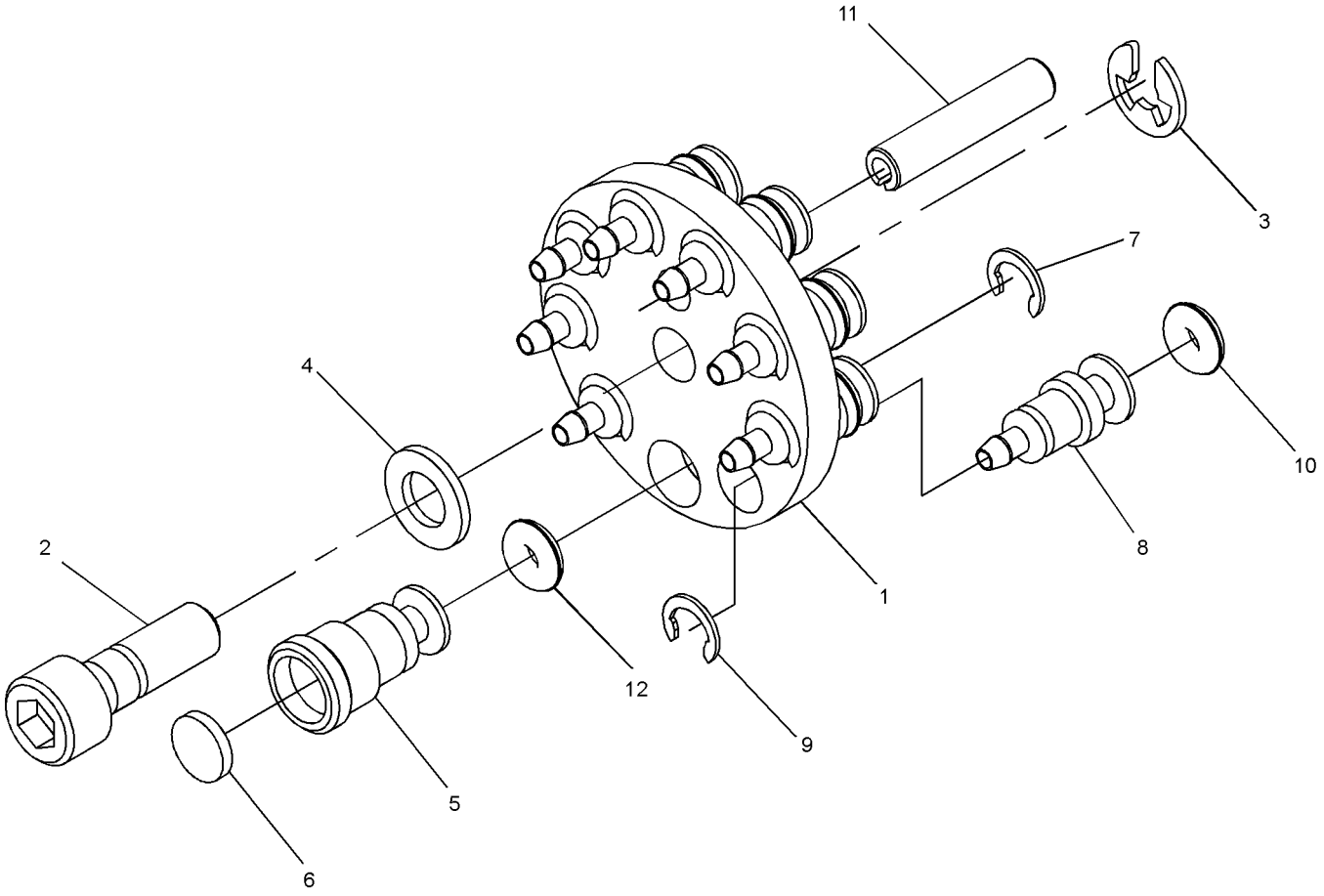

009025

Figure 9-25. Tube Fittings Disc Assembly, P/N 1653870-1

Figure and Index Number	Part Number	Description 1 2 3 4 5 6 7	Units Per Assembly	Usable On Code
9-25	3261129-0102	CONCENTRATOR, O_2N_2 MOLECULAR . . . . . . SIEVE (GGU-xx/A)	REF	A
	3261129-0101	CONCENTRATOR, O_2N_2 MOLECULAR . . . . . . SIEVE (GGU-xx/A) SN 11 and above	REF	B
	3261129-0101	CONCENTRATOR, O_2N_2 MOLECULAR . . . . . . SIEVE (GGU-xx/A) SN 10 and below	REF	C
	1656577-1	CONCENTRATOR ASSEMBLY	REF	A
	1653800-1	CONCENTRATOR ASSEMBLY	REF	B,C
	1656576-1	PRESSURE SWING ADSORPTION UNIT	REF	A
	1653710-1	PRESSURE SWING ADSORPTION UNIT	REF	B,C
	1653870-1	DISC ASSEMBLY, Tube Fittings . . . . . . (NHA, Figure 9-20)	REF	
-1	1653866-1	. DISC, Retainer, Tube . . . . . . (ATTACHING PARTS)	1	
-2	1653868-1	. SCREW, Captive	1	
-3	MS16633-1015	. RING, Retainer, External	1	
-4	NAS620-8	. WASHER, Flat . . . . . . ---*---	1	
-5	1653880-1	. FITTING, Vacuum	1	
-6	1603942-16	. FILTER, Inlet	1	
-7	MS16632-1015	. RING, Retainer, External	1	
-8	1653867-1	. BARB, Tube Fitting	8	
-9	MS16632-1015	. RING, Retainer, External	8	
-10	MS9068-004	. PACKING, Preformed	9	
-11	MS16562-35	. PIN, Spring, Tubular	1	

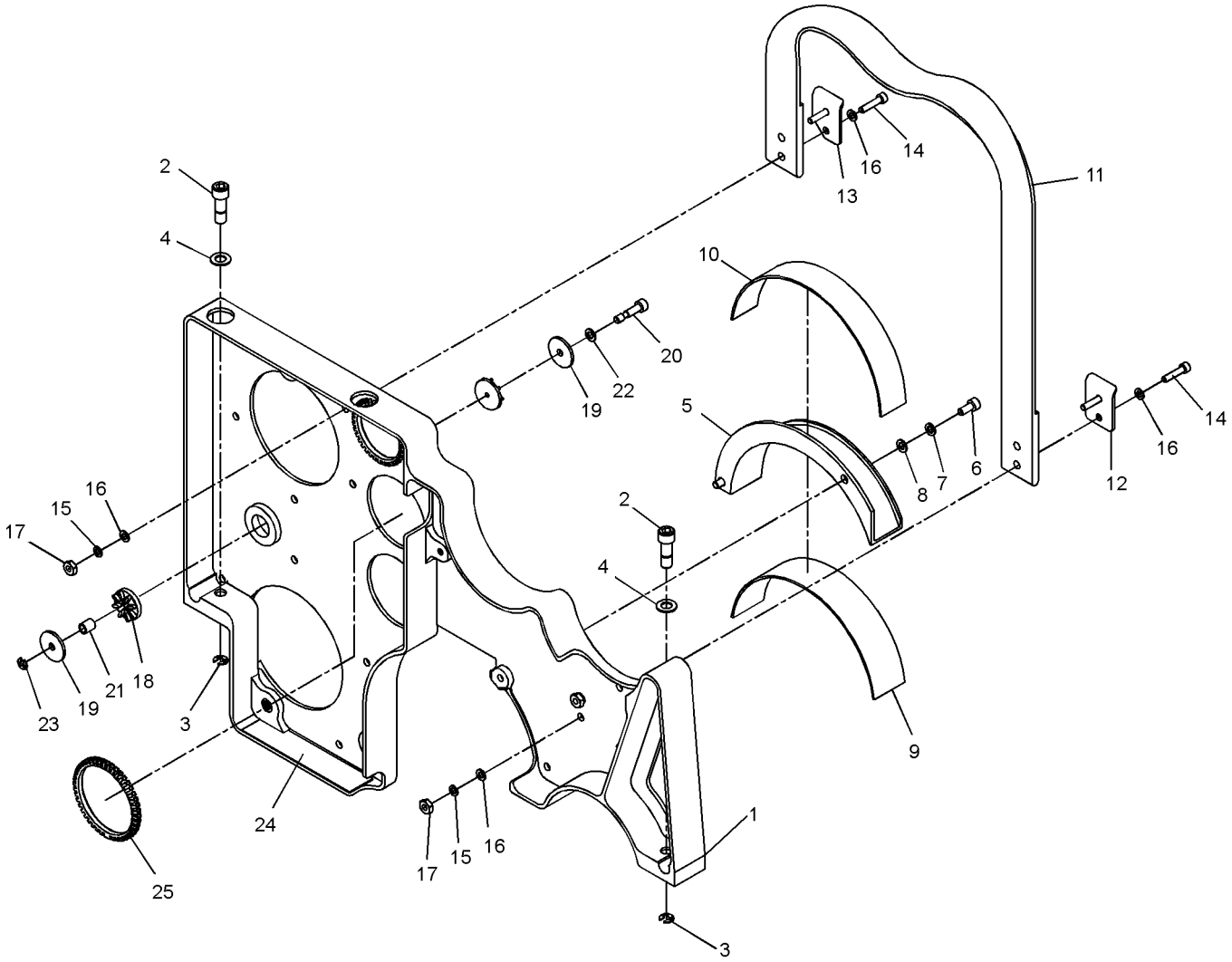

009026

Figure 9-26. Bed Outlet Structure Assembly, P/N 1653714-1

Figure and Index Number	Part Number	Description 1 2 3 4 5 6 7	Units Per Assembly	Usable On Code
9-26	3261129-0102	CONCENTRATOR, O_2N_2 MOLECULAR . . . . . . SIEVE (GGU-xx/A)	REF	A
	3261129-0101	CONCENTRATOR, O_2N_2 MOLECULAR . . . . . . SIEVE (GGU-xx/A) SN 11 and above	REF	B
	3261129-0101	CONCENTRATOR, O_2N_2 MOLECULAR . . . . . . SIEVE (GGU-xx/A) SN 10 and below	REF	C
	1656577-1	CONCENTRATOR ASSEMBLY	REF	A
	1653800-1	CONCENTRATOR ASSEMBLY	REF	B,C
	1656576-1	PRESSURE SWING ADSORPTION UNIT	REF	A
	1653710-1	PRESSURE SWING ADSORPTION UNIT	REF	B,C
	1653714-1	STRUCTURE ASSEMBLY, Bed Outlet . . . . . . (NHA, Figure 9-20)	REF	
-1	1653797-1	. SUPPORT, Bed, Outlet . . . . . . (ATTACHING PARTS)	1	
-2	1654016-1	. SCREW, Captive	2	
-3	MS16633-4018	. RING, Retainer, External	2	
-4	NAS620-416L	. WASHER, Flat . . . . . . ---*---	2	
-5	1653637-1	. FLANGE, Retainer, Plenum . . . . . . (ATTACHING PARTS)	1	
-6	NAS1352-08-6P	. SCREW, Cap, Socket Head	2	
-7	MS35338-42	. WASHER, Lock	2	
-8	NAS620-8	. WASHER, Flat	2	
-9	1653796-1	. PAD, Damping	1	
-10	1653796-5	. PAD, Damping . . . . . . ---*---	1	
-11	1653872-2	. STRAP, Lifting . . . . . . (ATTACHING PARTS)	1	
-12	1653851-1	. PLATE, Strap	1	
-13	1653851-2	. PLATE, Strap	1	
-14	NAS1352-06-10P	. SCREW, Cap, Socket Head	4	
-15	MS35338-41	. WASHER, Lock	4	
-16	NAS620-6	. WASHER, Flat	8	
-17	MS35649-262	. NUT, Plain, Hex . . . . . . ---*---	4	
-18	G-431-1	. GROMMET, Vibration Damping . . . . . . (1M331) (VID 1653873-1)	1	
-19	1653878-1	. RETAINER, Isolation Damper	2	
-20	1653879-1	. SCREW, Captive, Damper	1	
-21	1654017-1	. SLEEVE	1	
-22	NAS620-8	. WASHER, Flat	1	
-23	MS16633-1015	. RING, Retaining, External	1	
-24	1654250-1	. PAD, Damper	1	
-25	MS21266-2N	. GROMMET, Plastic, Edging	AR	

NUMERICAL INDEX

Part Number	Figure and Index No.	SM&R Code
A-A-52506TYHD512	9-20-54	PAGZZ
	9-20-109	PAGZZ
AN310C3	9-22-23	PAGZZ
AN565D428H16	9-23-19	PAGZZ
AN960C10L	9-24-5	PAGZZ
AS3582-008	9-22-15	PAGZZ
AS3582-017	9-20-102	PAGZZ
AS3582-020	9-20-98	PAGZZ
	9-23-7	PAGZZ
AS3582-022	9-20-65	PAGZZ
	9-20-67	PAGZZ
	9-20-73	PAGZZ
	9-20-79	PAGZZ
	9-20-87	PAGZZ
AS3582-023	9-20-25	PAGZZ
AS3582-024	9-22-3	PAGZZ
AS3582-042	9-22-22	PAGZZ
G-431-1	9-19-7	PAGZZ
	9-26-18	PAGZZ
MS16562-35	9-25-11	PAGZZ
MS16632-1015	9-25-7	PAGZZ
	9-25-9	PAGZZ
MS16633-1015	9-19-8	PAGZZ
	9-25-3	PAGZZ
	9-26-23	PAGZZ
MS16633-4018	9-20-13	PAGZZ
	9-26-3	PAGZZ
MS21042-06	9-20-5	PAGZZ
	9-20-10	PAGZZ
	9-21-10	PAGZZ
MS21266-2N	9-20-113	PAGZZ
	9-26-25	PAGZZ
MS21921-8D	9-20-57	PAGZZ
	9-20-61	PAGZZ
MS21922-8	9-20-58	PAGZZ
	9-20-62	PAGZZ
MS24665-1011	9-22-24	PAGZZ
MS35335-30	9-19-10	PAGZZ
MS35338-41	9-20-3	PAGZZ
	9-20-8	PAGZZ
	9-20-18	PAGZZ
	9-20-22	PAGZZ
	9-20-69	PAGZZ
	9-20-75	PAGZZ
	9-20-81	PAGZZ
	9-20-90	PAGZZ
	9-20-95	PAGZZ
	9-21-7	PAGZZ
	9-26-15	PAGZZ
MS35338-42	9-20-42	PAGZZ
	9-20-100	PAGZZ
	9-23-15	PAGZZ
	9-26-7	PAGZZ

Part Number	Figure and Index No.	SM&R Code
MS35338-43	9-20-27	PAGZZ
	9-20-52	PAGZZ
MS35338-135	9-23-11	PAGZZ
MS35338-137	9-22-5	PAGZZ
	9-22-9	PAGZZ
MS35338-138	9-24-6	PAGZZ
MS35649-202	9-20-53	PAGZZ
MS35649-204	9-22-20	PAGZZ
MS35649-262	9-20-4	PAGZZ
	9-20-9	PAGZZ
	9-20-19	PAGZZ
	9-20-23	PAGZZ
	9-21-9	PAGZZ
	9-23-8	PAGZZ
	9-26-17	PAGZZ
MS35650-304	9-24-7	PAGZZ
MS35842-15	9-20-29	PAGZZ
MS9068-004	9-25-10	PAGZZ
NAS1351-03-4P	9-23-2	PAGZZ
NAS1351-3-14P	9-20-26	PAGZZ
NAS1352C04-6	9-23-10	PAGZZ
NAS1352-06-6P	9-20-76	PAGZZ
	9-20-82	PAGZZ
	9-20-91	PAGZZ
	9-20-94	PAGZZ
NAS1352-06-8P	9-19-11	PAGZZ
NAS1352-06-10P	9-20-16	PAGZZ
	9-20-70	PAGZZ
	9-26-14	PAGZZ
NAS1352-06-12P	9-21-6	PAGZZ
NAS1352-08-6P	9-26-6	PAGZZ
NAS1352-08-10P	9-20-41	PAGZZ
	9-20-99	PAGZZ
	9-23-14	PAGZZ
NAS1352C08-10	9-22-4	PAGZZ
	9-22-8	PAGZZ
NAS620-10	9-20-28	PAGZZ
	9-20-51	PAGZZ
NAS620-416L	9-20-12	PAGZZ
	9-26-4	PAGZZ
NAS620C4	9-23-12	PAGZZ
NAS620-6	9-19-9	PAGZZ
	9-20-2	PAGZZ
	9-20-7	PAGZZ
	9-20-17	PAGZZ
	9-20-21	PAGZZ
	9-20-68	PAGZZ
	9-20-74	PAGZZ
	9-20-80	PAGZZ
	9-20-89	PAGZZ
	9-20-96	PAGZZ
	9-20-101	PAGZZ
	9-21-8	PAGZZ

NUMERICAL INDEX (Cont)

Part Number	Figure and Index No.	SM&R Code
NAS620-6	9-26-16	PAGZZ
NAS620-6L	9-21-12	PAGZZ
NAS620-8	9-19-4	PAGZZ
	9-20-43	PAGZZ
	9-25-4	PAGZZ
	9-26-8	PAGZZ
	9-26-22	PAGZZ
NAS620C8L	9-22-6	PAGZZ
	9-22-10	PAGZZ
NAS620C8	9-23-16	PAGZZ
1601381-1	9-20-103	PAGZZ
1601382-1	9-20-105	PAGZZ
1603942-16	9-25-6	PAGZZ
1632955-5	9-20-64	PAGZZ
	9-20-72	PAGZZ
	9-20-78	PAGZZ
	9-20-86	PAGZZ
1643187-2	9-23-4	PAGZZ
1643873-1	9-20-84	PAGZZ
	9-21-5	PAGZZ
	9-22-13	PAGZZ
1646394-1	9-23-9	PAGZZ
1646808-1	9-24-4	PAGZZ
1646809-1	9-24-3	PAGZZ
1646810-1	9-24-2	PAGZZ
1646814-2	9-23-6	PAGZZ
1646815-2	9-24-1	PAGZZ
1646820-1	9-22-11	PAGZZ
1646889-3	9-20-97	PAGZZ
1646896-1	9-21-14	PAGZZ
1646946-3	9-20-107	MGGZZ
1647059-1	9-20-104	PAGZZ
1647060-1	9-20-106	PAGZZ
1647152-1	9-23-5	PAGZZ
	9-24-REF	PAOGG
1647153-2	9-22-12	PAGZZ
1648601-1	9-20-108	PAGZZ
1649321-1	9-22-21	PAGZZ
1653335-1	9-22-14	PAGZZ
1653629-1	9-20-63	PAGZZ
	9-20-71	PAGZZ
1653637-1	9-26-5	PAGZZ
1653643-1	9-23-18	PAGZZ
1653695-1	9-21-1	PAGZZ
	9-22-REF	PAOGG
1653696-1	9-21-2	PAGZZ
	9-23-REF	PAOGG
	9-24-REF	PAOGG
1653700-1	9-19-2	PAGZZ
1653706-1	9-20-92	PAGZZ
1653707-1	9-20-93	PAGZZ
1653708-1	9-20-77	PAGZZ
1653710-1	9-19-1	PAOGG
	9-20-REF	PAOGG
	9-21-REF	PAOGG
	9-22-REF	PAOGG
	9-23-REF	PAOGG
	9-24-REF	PAOGG
	9-25-REF	PAOGG
	9-26-REF	PAOGG
1653711-1	9-20-44	PAGZZ
1653712-1	9-20-55	MGGZZ
1653713-1	9-20-59	MGGZZ
1653714-1	9-20-1	PAGZZ
	9-26-REF	PAOGG
1653715-1	9-20-6	PAGZZ
1653716-1	9-20-20	PAGZZ
1653720-1	9-20-24	PAGZZ
	9-21-REF	PAOGG
	9-22-REF	PAOGG
	9-23-REF	PAOGG
	9-24-REF	PAOGG
1653750-1	F9-20-103	REF
1653760-1	F9-20-103	REF
1653765-1	9-22-2	PAGZZ
1653770-1	F9-20-105	REF
1653776-1	9-22-19	PAGZZ
1653778-1	9-21-11	PAGZZ
1653780-1	F9-20-105	REF
1653783-1	9-22-1	PAGZZ
1653784-1	9-22-7	PAGZZ
1653785-1	9-21-3	PAGZZ
1653786-1	9-23-1	PAGZZ
1653787-1	9-23-13	PAGZZ
1653796-1	9-26-9	PAGZZ
1653796-2	9-20-110	PAGZZ
1653796-3	9-20-111	PAGZZ
1653796-4	9-20-112	PAGZZ
1653796-5	9-26-10	PAGZZ
1653797-1	9-26-1	PAGZZ
1653800-1	9-19-REF	PAOGG
	9-20-REF	PAOGG
	9-21-REF	PAOGG
	9-22-REF	PAOGG
	9-23-REF	PAOGG
	9-24-REF	PAOGG
	9-25-REF	PAOGG
	9-26-REF	PAOGG
1653845-1	9-20-31	XBGZZ
1653845-2	9-20-32	XBGZZ
1653845-3	9-20-33	XBGZZ
1653845-4	9-20-34	XBGZZ
1653845-5	9-20-35	XBGZZ
1653845-6	9-20-36	XBGZZ
1653845-7	9-20-37	XBGZZ
1653845-8	9-20-38	XBGZZ

NUMERICAL INDEX (Cont)

Part Number	Figure and Index No.	SM&R Code
1653845-9	9-20-39	XBGZZ
1653850-1	9-23-17	XBGZZ
1653851-1	9-20-15	PAGZZ
	9-26-12	PAGZZ
1653851-2	9-26-13	PAGZZ
1653860-1	9-20-85	PAGZZ
1653866-1	9-25-1	PAGZZ
1653867-1	9-25-8	PAGZZ
1653868-1	9-25-2	PAGZZ
1653870-1	9-20-30	PAGZZ
	9-25-REF	PAOGG
1653871-1	9-20-66	PAGZZ
1653872-1	9-20-14	PAGZZ
1653872-2	9-26-11	PAGZZ
1653875-1	9-20-83	PAGZZ
1653876-1	9-20-56	PAGZZ
	9-20-60	PAGZZ
1653878-1	9-19-5	PAGZZ
	9-26-19	PAGZZ
1653879-1	9-19-3	PAGZZ
	9-26-20	PAGZZ
1653880-1	9-25-5	PAGZZ
1653900-1	9-21-13	MGGZZ
1653900-4	9-22-16	MGGZZ
1653900-5	9-20-88	MGGZZ
1653900-6	9-20-49	MGGZZ
1653900-8	9-22-17	MGGZZ
1653900-10	9-23-3	MGGZZ
1653900-11	9-20-45	MGGZZ
1653900-12	9-20-46	MGGZZ
1653900-13	9-20-47	MGGZZ
1653900-14	9-20-48	MGGZZ
1654016-1	9-20-11	PAGZZ
	9-26-2	PAGZZ
1654017-1	9-19-6	PAGZZ
	9-26-21	PAGZZ
1654250-1	9-20-50	XBGZZ
	9-26-24	XBGZZ
1655046-1	9-20-40	PAGDD
1656575-1	9-20-40	PAGDD
1656576-1	9-19-1	PAOGG

Part Number	Figure and Index No.	SM&R Code
	9-20-REF	PAOGG
	9-21-REF	PAOGG
	9-22-REF	PAOGG
	9-23-REF	PAOGG
	9-24-REF	PAOGG
	9-25-REF	PAOGG
	9-26-REF	PAOGG
1656577-1	9-19-REF	PAOGG
	9-20-REF	PAOGG
	9-21-REF	PAOGG
	9-22-REF	PAOGG
	9-23-REF	PAOGG
	9-24-REF	PAOGG
	9-25-REF	PAOGG
	9-26-REF	PAOGG
1657455-1	9-21-4	XBDZZ
200-35-DX	9-22-18	PAGZZ
3261129-0101	9-19-REF	PAOGG
SN 10 and below	9-20-REF	PAOGG
	9-21-REF	PAOGG
	9-22-REF	PAOGG
	9-23-REF	PAOGG
	9-24-REF	PAOGG
	9-25-REF	PAOGG
	9-26-REF	PAOGG
3261129-0101	9-19-REF	PAOGG
SN 11 and above	9-20-REF	PAOGG
	9-21-REF	PAOGG
	9-22-REF	PAOGG
	9-23-REF	PAOGG
	9-24-REF	PAOGG
	9-25-REF	PAOGG
	9-26-REF	PAOGG
3261129-0102	9-19-REF	PAOGG
	9-20-REF	PAOGG
	9-21-REF	PAOGG
	9-22-REF	PAOGG
	9-23-REF	PAOGG
	9-24-REF	PAOGG
	9-25-REF	PAOGG
	9-26-REF	PAOGG