CHAPTER 9

PRESSURE REDUCER ASSEMBLIES

P/Ns F103D000-1, F103D000-7, F103D000-11, AND F103D000-15

Section 9-1. Description

9-1. GENERAL.

9-2. The Pressure Reducer Assembly (figure 9-1) P/Ns F103D000-1, F103D000-7, F103D000-11, and F103D000-15, is a bellows type reducer. Table 9-1 contains the leading particulars for the pressure reducer.

9-3. Gaseous oxygen is stored in the aircraft oxygen bottles at a working pressure of 1800 psi. The pressure reducer reduces the 1800 psi bottle pressure to a delivery pressure of 60 to 75 psi to prevent system overpressurization.

9-4. This chapter will cover disassembly, repairing, cleaning, reassembly and testing procedures of the Carleton pressure reducer assemblies.

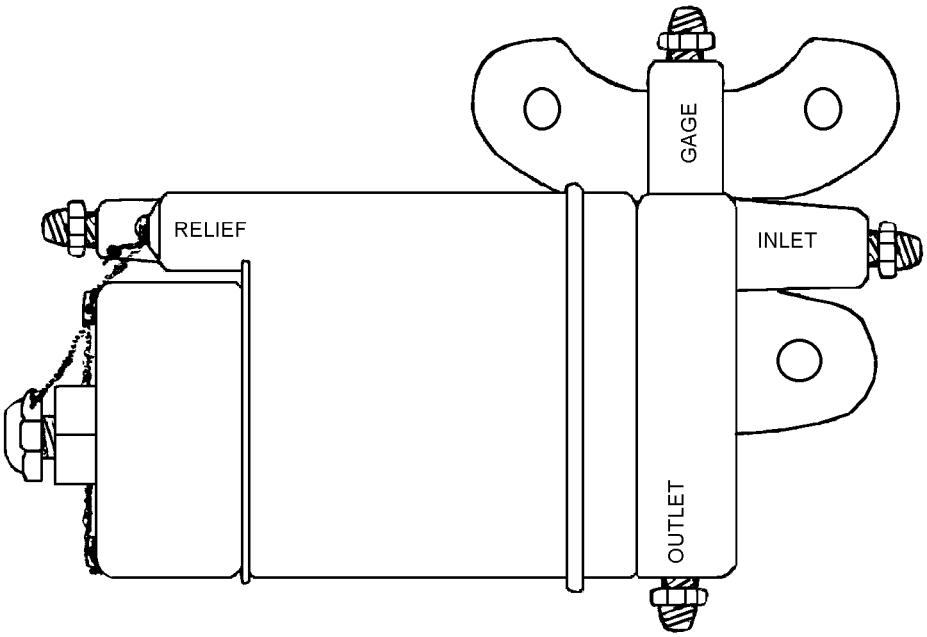

009001

Figure 9-1. Oxygen Pressure Reducer Assembly

Table 9-1. Leading Particulars

CHARACTERISTICS	
Nomenclature	Pressure Reducing Valve
Weight	1.4 lbs.
Height	2 7/8 in.
Length	4 11/16 in.
Width	2 1/32 in.
Operating Gas Type	Oxygen
Port Identification	Gage, Inlet, Relief, Outlet
Relief Valve Characteristics:	
Opening Pressure	145 ± 15 psig
Closing Pressure	115 psig, min.
Reducer Outlet Flow	75 std lpm, min, at 120 psig

Section 9-2. Modifications

9-5. GENERAL.

9-6. There are no modifications to the Pressure Reducer Assemblies P/Ns F103D000-1, F103D000-7, F103D000-11, and F103D000-15 required/authorized at this time.

Section 9-3. Maintenance

9-7. GENERAL.

9-8. This section contains the procedural steps for Disassembly, Cleaning, Inspection, Repair or Replacement, Lubrication, Reassembly and Test Procedures of the Pressure Reducer Assemblies.

9-9. DISASSEMBLY.

NOTE

Disassembly of the Pressure Reducer is only required for visible corrosion, external defects, or the pressure reducer fails the bench test in accordance with paragraph 9-21.

9-10. Disassemble the pressure reducer assemblies as follows:

Materials Required

Quantity	Description	Reference Number
As Required	Acetone	—

Support Equipment Required

Quantity	Description	Reference Number
1	Wrench, Retainer	OT620
1	Wrench, Spanner	OT561
1	Wrench, Valve Seat	OT405

1. Perform all disassembly and overhaul procedures in a clean, dust free area provided with air conditioning or air filtration. Keep all parts of individual reducer assemblies separated. Required tools are listed on table 9-2.

2. Disassemble reducing valve only to the extent necessary to perform required cleaning, inspection, repair or replacement, or testing procedures. Disassemble unit (either partially or completely) in the sequence indicated by the index numbers of figure 9-2. Unless otherwise indicated, index numbers as given refer to figure 9-2.

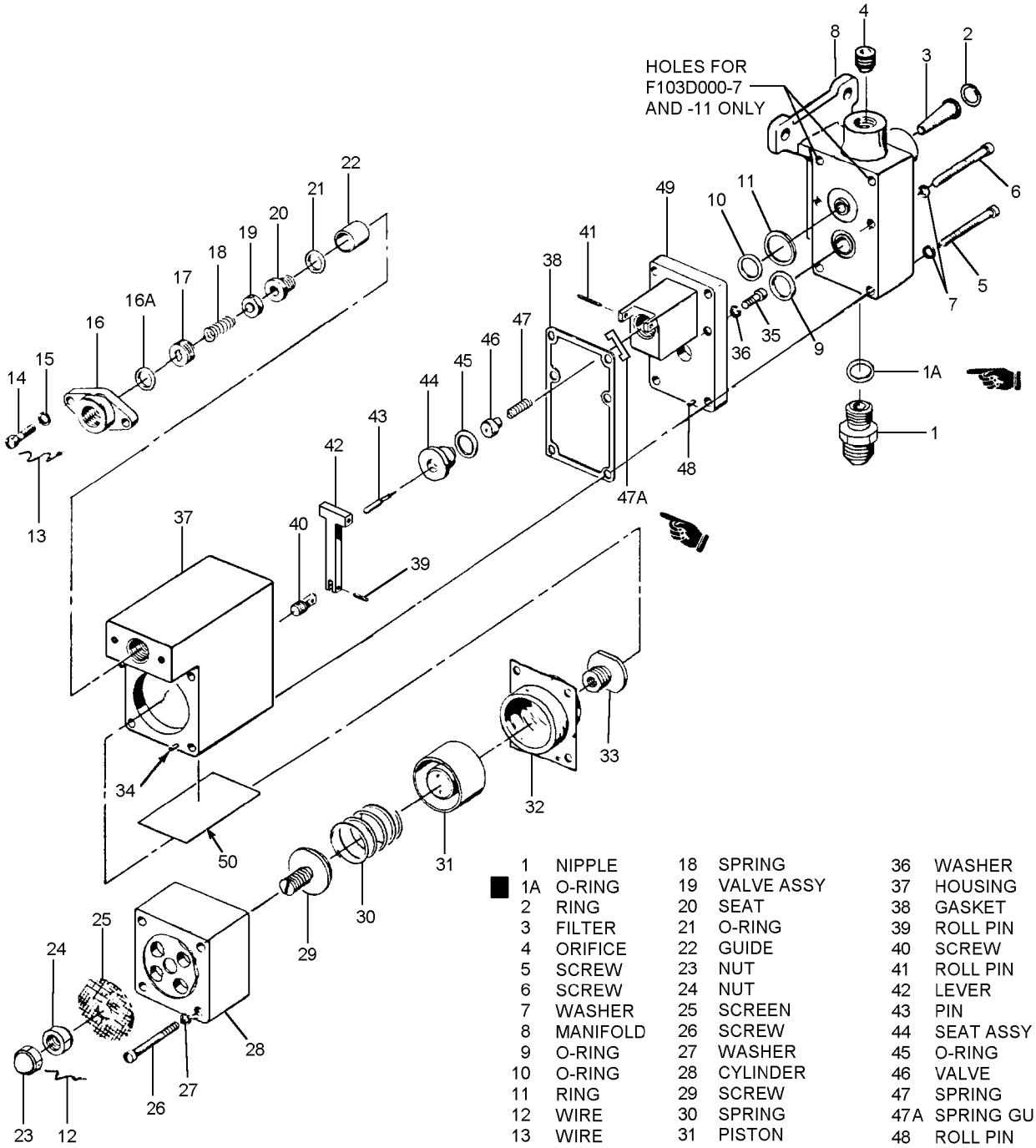

1	NIPPLE	18	SPRING	36	WASHER
■ 1A	O-RING	19	VALVE ASSY	37	HOUSING
2	RING	20	SEAT	38	GASKET
3	FILTER	21	O-RING	39	ROLL PIN
4	ORIFICE	22	GUIDE	40	SCREW
5	SCREW	23	NUT	41	ROLL PIN
6	SCREW	24	NUT	42	LEVER
7	WASHER	25	SCREEN	43	PIN
8	MANIFOLD	26	SCREW	44	SEAT ASSY
9	O-RING	27	WASHER	45	O-RING
10	O-RING	28	CYLINDER	46	VALVE
11	RING	29	SCREW	47	SPRING
12	WIRE	30	SPRING	47A	SPRING GUIDE ■
13	WIRE	31	PISTON	48	ROLL PIN
14	SCREW	32	BELLOFRAM SEAL	49	SUBMANIFOLD
15	WASHER	33	SCREW	50	IDENTIFICATION PLATE
16	PIPE BOSS	34	ROLL PIN		
16A	O-RING	35	SCREW		
17	RETAINER				

009002

Figure 9-2. Reducing Valve Part Layout

Table 9-2. Special Tools and Test Equipment

Part Number	Manufacturer	Nomenclature	Key to Text
OT405	Carleton Technologies Orchard Park, NY.	Valve Seat Wrench.	9-10, step 7.
OT561	Carleton Technologies Orchard Park, NY.	Spanner Wrench.	9-10, step 6.
OT620	Carleton Technologies Orchard Park, NY.	Retainer Wrench.	9-10, step 4.

3. Discard O-rings (1A, 9, 10, 16A, 21, and 45), safety wires (12 and 13) and gasket (38) at each overhaul.

4. To break seal between retainer (17) and housing (37), apply a few drops of acetone on edge of sealant. Use retainer wrench to remove retainer when sealant becomes pliable. Remove spring (18).

CAUTION

Handle valve assembly (19) and seat (20) carefully to avoid damage to polished surfaces.

5. Use an 1/8-inch allen wrench to remove seat (20).

6. Piston (31), bellofram seal (32) and screw (33) must be removed as a unit and then disassembled. Carefully pry flange of bellofram seal away from housing (37), insert spanner wrench in piston, and rotate wrench counterclockwise to remove parts as a unit. Place a 5/8-inch open end wrench on screw (33) to disassemble unit into individual parts.

CAUTION

Do not remove roll pins (34) or (48) unless replacement is necessary. Continual removal of roll pins cause enlargement of mounting holes in housing (37) and submanifold (49).

7. Use valve seat wrench to remove seat assembly (44) from submanifold (8 or 49).

CAUTION

Be careful not to bend or otherwise damage pin (43), or scratch or mar polished surfaces of seat assembly (44) and valve (46).

8. Do not remove plate (50) unless replacement is necessary.

9-11. CLEANING.

9-12. Clean the Pressure Reducer Assemblies as follows:

Materials Required

Quantity	Description	Reference Number
As Required	Bag, Plastic	MIL-B-117
As Required	Brush, Non-metallic, Soft	A-A-289
As Required	Cloth, Cleaning	MIL-C-85043
As Required	Nitrogen, Oil-free, Water Pumped, Type I, Class I, Grade B	Fed Spec BB-N-411 NIIN 00-985-7275

WARNING

Care is to be taken to avoid prolonged breathing or skin contact with acetone. Approved respirators, gloves, and eye protection shall be used.

1. Remove all traces of sealing compound from screws (5, 6, 14, 26, and 35), washers (7, 15, 27, and 36), retainer (17), housing (37), and submanifold (8 or 49) as applicable.

2. Brush away foreign matter using a soft non-metallic brush.

3. Discard filter (3) if found to be contaminated with foreign particles.

4. Clean metallic parts using procedures outlined in Chapter 4.

5. Wipe non-metallic parts with a clean, lint-free cloth.

6. Dry parts with oil-free nitrogen at 25 psi maximum. Metallic parts may be dried in an industrial oven pre-heated to between 121°C (250°F) and 149°C (300°F) for approximately 30 minutes. Do not exceed specific drying times and temperatures.

7. Store cleaned parts in plastic bags to prevent contamination and loss.

9-13. INSPECTION.

9-14. Inspect the disassembled parts as follows (table 9-3):

NOTE

Instructions are provided for parts; however, kits are to be used unless not readily available from supply.

1. Visually inspect all metallic parts (as applicable) for breaks, scratches, cracks, corrosion, distortion or any other defects. There are no tolerances for wear other than those in table 9-3. Continuous use of detail parts is allowed only as long as inspection and test requirements can be met.

2. Inspect all reducing valve components for hydrocarbon contamination. An explosion may result if oxygen contacts contaminated parts. Use an ultraviolet light (or equivalent means) to perform this inspection. Ultraviolet lights can detect contaminants not normally visible to the naked eye. If contaminants are detected, clean the components using procedures provided in Chapter 4. If unable to clean the components, replace them with new components.

9-15. REPAIR OR REPLACEMENT.

9-16. Repair or replacement shall be as follows:

NOTE

Instructions are provided for parts; however, kits are to be used unless not readily available from supply.

1. Permissible repair is limited to removing minor burrs, nicks, scratches, and corrosion from parts where removal will not affect the performance.

2. Replace all parts that are damaged beyond repair or that fail to meet inspection requirements and cannot be restored to usable condition by allowable repairs.

9-17. LUBRICATION.

9-18. Lubrication is accomplished during reassembly.

WARNING

All hydrocarbon or hydrocarbon-based lubricants shall not be used on reducing valve parts. Such lubricants, even in minute amounts, can cause an explosion or fire if they come in contact with oxygen.

1. Lubrication of the pressure reducer assemblies shall be performed as indicated during reassembly. Only approved lubricants as specified shall be used.

Table 9-3. Inspection Particulars

Part Name and Part No.		Type of Inspection	Inspect For	Acceptable Defects
Filter.	14898	Visual.	Inspect for broken surfaces, particularly at the outside diameter.	None.
Manifold. Cylinder. Housing. Submanifold.	F103D004-1 F103D004-3 16405 17865 17974	Visual.	Inspect for structural defects, excessive scratching, deep dents, pitting, and corrosion.	Slight scratches only on non-sealing surfaces.
Springs.	F3981032 16541 16727	Visual.	Inspect for distortion, unevenly paced or elliptical convolutions, open and rounded coil ends, and corrosion.	None.
Seat.	16681	Visual.	Inspect O-ring seating area for nicks or burrs.	None.
Screen.	16404	Visual.	Inspect for dirt, torn or excessively bent fibers, and enlarged screen holes.	None.
Piston.	17954	Visual.	Inspect surface of outside diameter for unsmooth, pitted, or scratched condition; ascertian that serrations are clean and free of foreign matter.	None.
Lever. Seat Assembly. Valve.	17849 17929 17958-1	Visual.	Inspect highly polished surfaces of these parts for evidence of chipping or scratching and corrosion.	None.
Seat Assembly.	17929	Measurement.	Measure inside diameter. Diameter shall not exceed 0.0634 inch.	None.
Guide (F103D000-7 and -11 only).	16682	Visual.	Inspect surfaces for pitted or scratched condition; make certain part is clean and free of foreign matter and corrosion.	None.

9-19. REASSEMBLY.

9-20. Reassembly of the pressure reducer assemblies is as follows:

Materials Required

Quantity	Description	Reference Number
As Required	Tape, Anti-seize	MIL-T-27730
As Required	Krytox 240 Lubricant, Type II	MIL-G-27617
As Required	Nitrogen, Oil-free, Water Pumped, Type I, Class I, Grade B	Fed Spec BB-N-411 NIIN 00-985-7275

Support Equipment Required

Quantity	Description	Reference Number
1	Wrench, Spanner	OT561
1	Wrench, Valve Seat	OT405

1. Reassemble reducing valve in reverse of the sequence indicated by the index numbers of figure 9-2, noting the precautions used in paragraph 9-8.

2. Apply a thin coat of Krytox 240 to O-rings (1A, 9, 10, 16A, 21, and 45), gasket (38) and bottom of screw (29) prior to assembly.

CAUTION

Do not over-tighten screws, as damage to the heads or threads may result. Also, roll pins (48, 41, 39, and 34) should be re-installed carefully, as improper alignment and malfunction of components may result if pins are bent or nicked.

3. Re-install components (43 thru 47A) into submanifold (8 or 49) in the following sequence: Place spring guide (47A, F103D000-15 only), spring (47), valve (46) and pin (43) into submanifold. Place O-ring (45) onto seat (44) and carefully guide seat (44) onto pin (43). Using valve seat wrench, carefully tighten seat (44) into submanifold (8 or 49).

4. Align bellofram seal (32) with piston (31) as shown in figure 9-3. Moisten seal with Krytox 240 or equivalent. Holding piston (31) with spanner wrench, thread screw (33) into piston. Using care not to damage bellofram seal (32), tighten screw to approximately 5 in-lb. torque with a 5/8-inch open end wrench.

5. Invert bellofram seal (32) over piston (31) as shown in figure 9-3. Set piston and seal assembly aside.

6. Insert gasket (38) onto submanifold (8 or 49). Insert lever assembly (42) through housing (37) until lever assembly protrudes through housing as shown in figure 9-4.

7. Screw piston and seal assembly (31 and 32) onto lever (42) protruding through housing (37) as shown in figure 9-4. Tighten assembly finger tight, then back assembly off counterclockwise approximately one full turn.

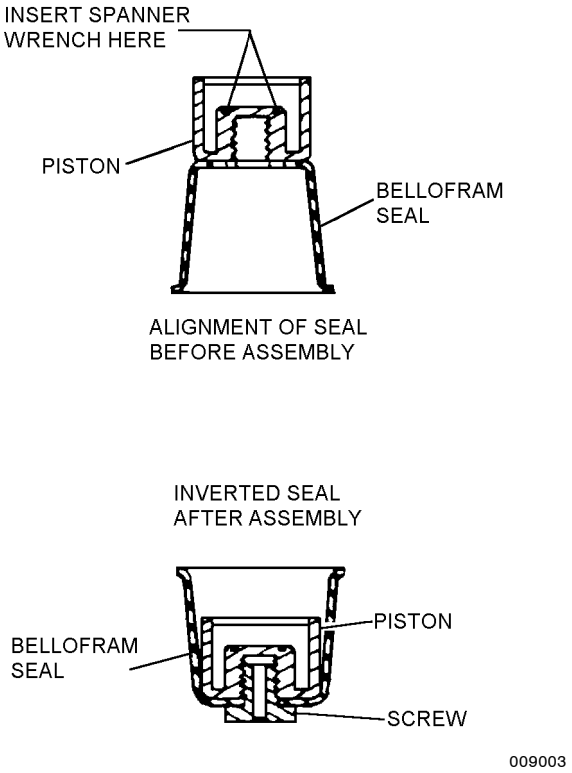

Figure 9-3. Bellofram Seal Installation

8. Align bellofram seal (32) in housing (37) using guidepins, ensuring holes in bellofram seal are mated to rollpins (34) in housing (37) (figure 9-6).

9. Install screw (29) into cylinder (28) fully counterclockwise until screw (29) bottoms out, then turn screw (29) clockwise approximately one full turn. Do not install screen (25), nut (24), and nut (23).

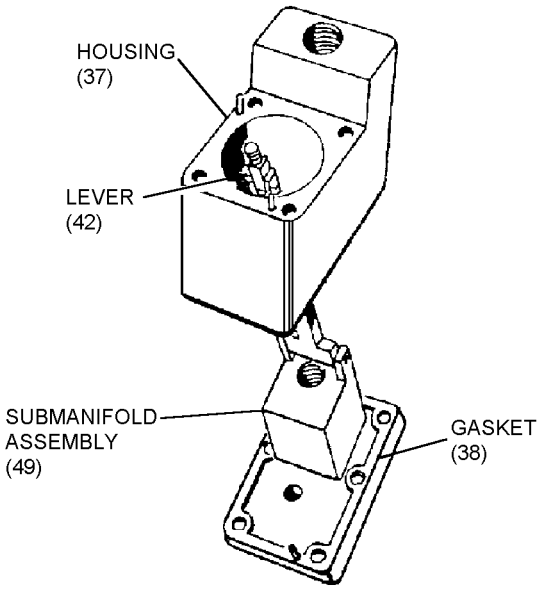

Figure 9-4. Housing and Submanifold Assembly

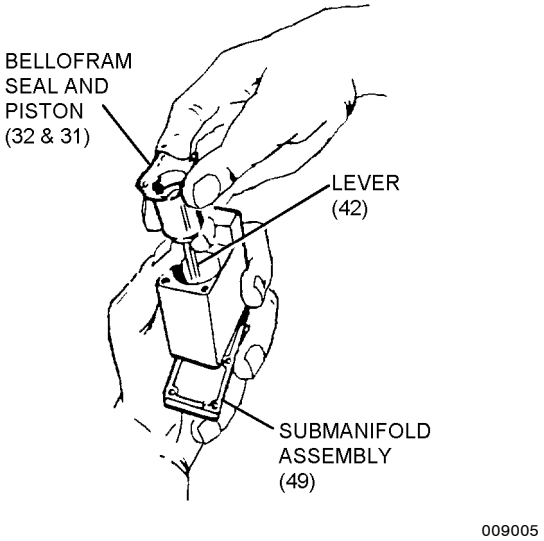

Figure 9-5. Seal and Lever Assembly

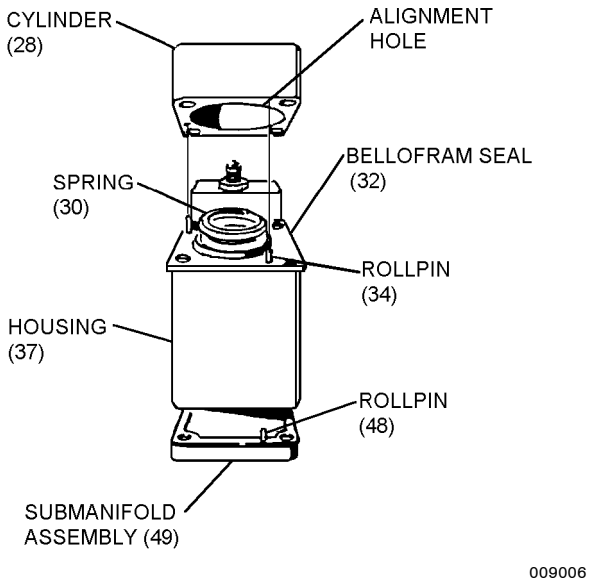

Figure 9-6. Seal Alignment

10. Align cylinder (28) with roll pins (34) and carefully install cylinder (28) onto housing (37) as shown in figure 9-6. Secure cylinder (28) to housing (37) using screws (26) and washers (27). Tighten screws (26) evenly.

11. (For P/N F103D000-1 only) Align and mate submanifold (49) to housing (37) so that roll pin (48) lines up with hole in housing (37) (figure 9-7). Secure manifold to housing with attaching parts (35 and 36) and tighten evenly.

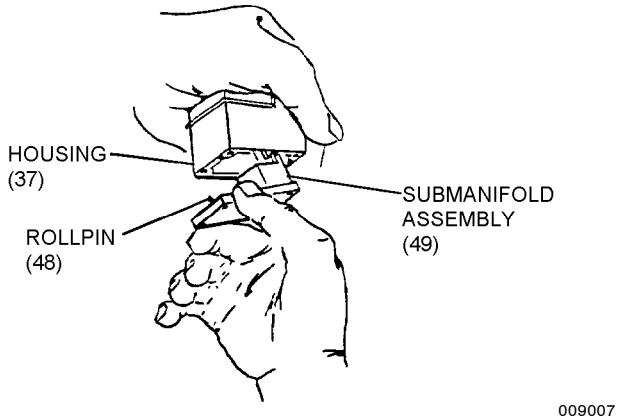

Figure 9-7. Aligning Housing and Submanifold Assembly

12. (For P/Ns F103D000-7 and F103D000-11) Install ring (11), O-ring (9), and O-ring (10) onto manifold (8). Align manifold (8) onto submanifold (49). Insert washers (7) and screws (6) through manifold (8) and submanifold (49). Carefully align and mate manifold (8 and 49) onto housing (37). Secure manifold and housing together using screws (6). Tighten all screws evenly.

13. (For P/N F103D000-15 only) Insert washers (7) and screws (6) through manifold (8). Carefully align and mate manifold (8) onto housing (37). Secure manifold and housing together using screws (6). Tighten all screws evenly.

14. Reinstall guide (22), O-ring (21), seat (20), valve (19), spring (18), retainer (17), O-ring (16A) into housing (37). Place pipe boss (16) onto housing (37) and secure with washers (15) and screws (14). Tighten screws evenly. Do not install safety wires (12 and 13).

15. Blow out all openings of manifold (8) with oil-free nitrogen at 25 psi maximum.

16. (For P/Ns F103D000-1, F103D000-7, and F103D000-11) Insert orifice (4) into manifold (8). Apply anti-seize tape to pipe threads of nipples (1).

17. (For P/N F103D000-15 only) Install O-ring (1A) onto nipples (1).

18. Reinstall filter (3), ring (2), and nipples (1) into unit.

19. Prior to bench testing, tighten screw (29) clockwise until 7 threads remain visible. Final adjustment of screw (29) will be completed during bench test. Install screen (25) and nut (24) onto screw (29). Do not tighten nut (24) and do not install nut (23) until instructed during bench test.

9-21. BENCH TEST.

NOTE

The bench test is performed on the Pressure Reducer every 896 days.

9-22. To bench test the pressure reducer assemblies using the oxygen systems components test stand, proceed as follows:

WARNING

For oxygen test stands, use only Nitrogen from grey cylinders marked "NITROGEN OIL FREE" in white letters. Two 3-inch wide black bands mark the top of these cylinders. Do not use 3500 psig Nitrogen cylinders. These cylinders cannot be certified contaminant free.

NOTE

All test procedures shall be accomplished using the models 1172AS100 or 1316AS100 Oxygen Systems Components Test Stands.

Tests are arranged so they proceed from one test to the next with a minimum of valve positioning changes. All part index numbers refer to figure 9-2 unless otherwise indicated.

Ensure pressure reducer assembly was delivered from squadron with inlet, outlet, gage, and relief fittings installed. Pressure reducer assembly shall be returned to the squadron or supply with inlet, outlet, gage, and relief fittings after Bench Test is completed.

9-23. HIGH PRESSURE LEAKAGE TEST. To perform the High Pressure Leakage Test, proceed as follows:

Materials Required

Quantity	Description	Reference Number
As Required	Compound, Leak Detection, Type 1	MIL-L-25567
As Required	Nitrogen, Oil-free, Water Pumped, Type I, Class I, Grade B	Fed Spec BB-N-411 NIIN 00-985-7275

Support Equipment Required

Quantity	Description	Reference Number
1	Oxygen Systems Components Test Stand	1172AS100 or 1316AS100
2	Adapter Assembly	Fabricate IAW figure 9-7A

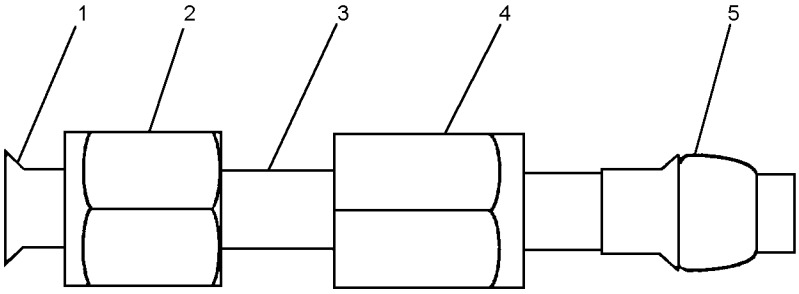

ADAPTER

1. #5 SLEEVE (MS20819-5J)
2. #5 B-NUT (AN818-5J)
3. 5/16 OD STAINLESS STEEL (MIL-T-6845-5)
4. #5 B-NUT (MS21921-5J)
5. STEEL SLEEVE (MS21922-5)

NOTE:

SOME ACTIVITIES MAY NEED TO BUILD AN ADAPTER WITH TWO FLARED ENDS IN ORDER TO HOOK UP TO N_2 INPUT CONNECTION (18)

009007a

Figure 9-7A. Adapter

1. Ensure all test stand valves are properly secured.

2. Cap the outlet and gage ports of the pressure reducer assembly.

3. Connect the inlet port of the pressure reducer assembly to N_2 INPUT connection (18) in the altitude chamber using adapter (figure 9-7A) and fitting No. 4 to No. 5 or No. 5 to No. 5 as required.

4. Turn INLET PRESS. ON/OFF valve (L) on.

5. Using HIGH PRESS. REGULATOR (Q), slowly apply 1800 psig as indicated on REGULATED HIGH PRESS. gage (10).

6. Using leak detection compound check entire reducer for external leakage (figure 9-8). No leakage is allowed.

7. Turn HIGH PRESS. REGULATOR (Q) to vent.

8. Open SYSTEM BLEED valve (S) and bleed stand. Close valve (S).

9. Turn INLET PRESS. ON/OFF valve (L) off.

10. Disconnect pressure reducer assembly from N_2 INPUT connection (18). Proceed to next test.

9-24. SHUT-OFF VALVE TEST. To preform the Shut-off Valve Test, proceed as follows:

Materials Required

Quantity	Description	Reference Number
As Required	Nitrogen, Oil-free, Water Pumped, Type I, Class I, Grade B	Fed Spec BB-N-411 NIIN 00-985-7275

Support Equipment Required

Quantity	Description	Reference Number
1	Oxygen Systems Components Test Stand	1172AS100 or 1316AS100
2	Adapter Assembly	Fabricate IAW figure 9-7A

1. Connect the inlet port of the pressure reducer assembly to an outside source of 0 to 1800 psig regulated nitrogen (other than the test stand) using adapter (figure 9-7A) and fitting No. 4 to No. 5 or No. 5 to No. 5 as required.

2. Uncap the outlet port of the pressure reducer assembly and connect the outlet port to N_2 INPUT connection (18) using adapter (figure 9-7A) and fitting No. 4 to No. 5 or No. 5 to No. 5 as required.

3. Using 0 to 1800 psig regulated nitrogen source, apply 1800 psig to inlet port of pressure reducer assembly. Reading on N_2 INPUT PRESS. gage (27) shall be 60 to 75 psig. If pressure is not within limits, remove nut (23), loosen nut (24) and using a screwdriver, adjust screw (29) clockwise to increase outlet pressure or counterclockwise to decrease outlet pressure. (figure 9-9). After adjustments, replace nuts (23 and 24).

4. Observe N_2 PRESS. INPUT gage (27) for 6 minutes. Pressure indicated on gage shall not increase more than 2 psig. Proceed to next test.

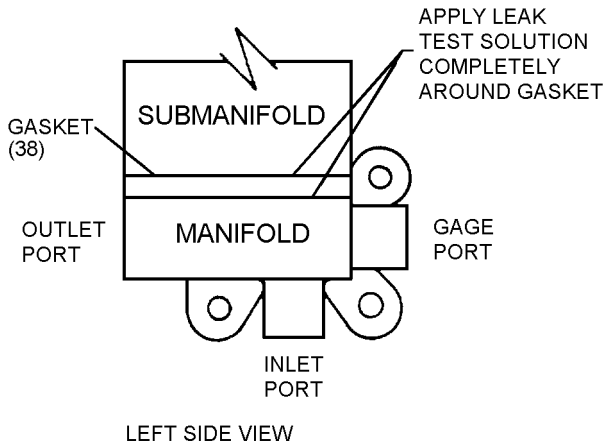

Figure 9-8. Leak Detection Compound Application

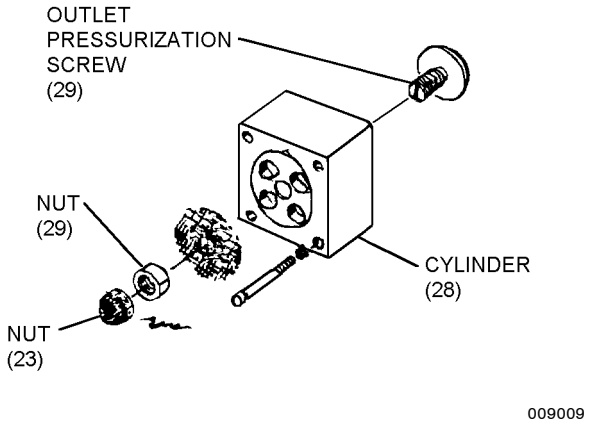

Figure 9-9. Outlet Pressure Adjusting Point for Reducer Shut-off Test

9-25. FLOW TEST. To perform the Flow Test, proceed as follows:

Materials Required

Quantity	Description	Reference Number
As Required	Nitrogen, Oil-free, Water Pumped, Type I, Class I, Grade B	Fed Spec BB-N-411 NIIN 00-985-7275

Support Equipment Required

Quantity	Description	Reference Number
1	Oxygen Systems Components Test Stand	1172AS100 or 1316AS100
2	Adapter Assembly	Fabricate IAW figure 9-7A

NOTE

Using the vent flow graph, convert a 130 lpm flow to inH_2O.

1. Place FLOW SELECTOR valve (M) in the SUIT SIMULATOR position.

2. Turn INLET PRESS. ON/OFF valve (L) on.

NOTE

When performing step 3, a pressure drop through the pressure reducer and suit simulator system on the oxygen component test stand will occur. A one minute stabilization period will be required after VENT PRESS. valve (H) is closed to achieve the 60 to 75 psig pressure reading on N_2 INPUT PRESS. gage (27).

3. Slowly open VENT PRESS. valve (H) until a 130 lpm flow is indicated on VENT FLOW manometer (3); pressure indicated on INPUT PRESS. gage (27) shall be at least 53 psig. Close VENT PRESS. valve (H); pressure indicated on N_2 PRESS. INPUT gage (27) shall be 60 to 75 psig.

4. Decrease inlet pressure to reducer assembly to 200 psig.

5. Slowly open VENT PRESS. valve (H) until a 130 lpm flow is indicated on VENT FLOW manometer (3); Pressure indicated on N_2 PRESS. INPUT gage (27) shall be at least 53 psig.

6. Close VENT PRESS. valve (H); pressure indicated on N_2 PRESS. INPUT gage (27) shall not exceed 75 psig.

7. Secure and bleed pressure from regulated nitrogen source.

8. Open SYSTEM BLEED valve (S) and bleed test stand and secure all test stand valves.

9. Disconnect pressure reducer assy inlet port from regulated nitrogen source and disconnect pressure reducer outlet port from N_2 INPUT connection (18). Proceed to next test.

9-26. OVERALL LEAKAGE TEST. To perform Overall Leakage Test, proceed as follows:

Materials Required

Quantity	Description	Reference Number
As Required	Nitrogen, Oil-free, Water Pumped, Type I, Class I, Grade B	Fed Spec BB-N-411 NIIN 00-985-7275

Support Equipment Required

Quantity	Description	Reference Number
1	Oxygen Systems Components Test Stand	1172AS100 or 1316AS100
2	Adapter Assembly	Fabricate IAW figure 9-7A

1. Connect the pressure reducer relief valve port to N_2 INPUT connection (18) using adapter (figure 9-7A) and fitting No. 4 to No. 5 or No. 5 to No. 5 as required.

2. Turn INLET PRESS. ON/OFF valve (L) on.

3. Using LOW PRESS. REGULATOR (N), apply 130 psig to the relief valve port.

4. Turn INLET PRESS. ON/OFF valve (L) off and observe N_2 INPUT PRESS. gage (27) for 2 minutes; pressure drop shall not exceed 2 psig.

5. Turn INLET PRESS. ON/OFF valve (L) to on.

6. Turn LOW PRESS. REGULATOR (N) counterclockwise, open SYSTEM BLEED valve (S) and bleed stand. Close (S).

7. Disconnect relief valve port from N_2 INPUT connection (18). Proceed to next test.

9-27. RELIEF VALVE TEST. To perform Relief Valve Test, proceed as follows:

Materials Required

Quantity	Description	Reference Number
As Required	Nitrogen, Oil-free, Water Pumped, Type I, Class I, Grade B	Fed Spec BB-N-411 NIIN 00-985-7275

Support Equipment Required

Quantity	Description	Reference Number
1	Oxygen Systems Components Test Stand	1172AS100 or 1316AS100
1	Wrench, Retainer	OT620
2	Adapter Assembly	Fabricate IAW figure 9-7A

1. Connect pressure reducer outlet port to N_2 INPUT connection (18) using adapter (figure 9-7A) and fitting No. 4 to No. 5 or No. 5 to No. 5 as required.

2. Cap pressure reducer inlet and gage ports.

3. Turn INLET PRESS. ON/OFF valve (L) on.

4. Using LOW PRESS. REGULATOR (N), apply 130 to 160 psig to the outlet port and observe REGULATED LOW PRESS. gage (11); record pressure from REGULATED LOW PRESS. gage (11) at which the relief valve unseats.

5. Using LOW PRESS. REGULATOR (N), increase pressure to 160 to 170 psig, then slowly decrease pressure until relief valve reseats; record pressure on N_2 INPUT PRESS. gage (27); pressure shall not be less than 115 psig. If relief valve operating pressures cannot be obtained, use retainer wrench to adjust retainer (17) until proper reading can be obtained (figure 9-10).

6. Repeat steps 4 and 5 two more times.

7. Turn LOW PRESS. REGULATOR (N) counterclockwise, open SYSTEM BLEED valve (S) and bleed test stand. Close INLET PRESS. ON/OFF valve (L), SYSTEMS BLEED valve (S) and disconnect pressure reducer from N_2 INPUT connection (18). Proceed to next test.

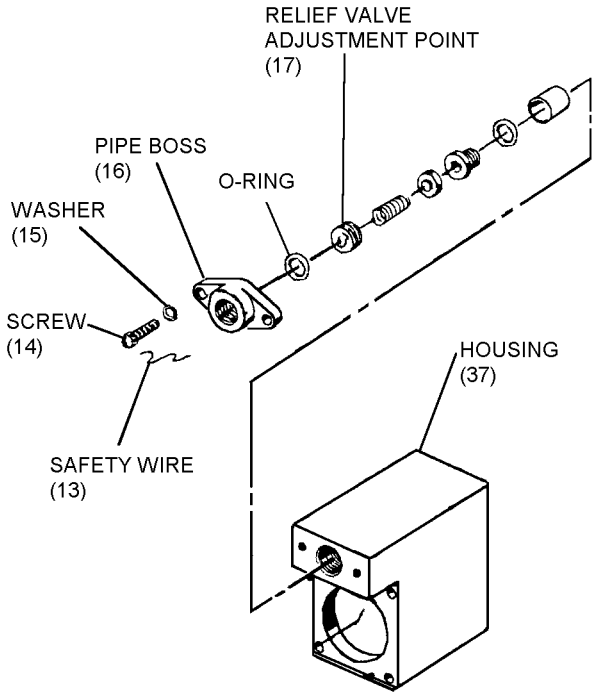

Figure 9-10. Relief Valve Adjustment Point for Operating Pressure and Flow Test

9-28. RELIEF VALVE FLOW TEST. To perform the Relief Valve Flow Test, proceed as follows:

Materials Required

Quantity	Description	Reference Number
As Required	Nitrogen, Oil-free, Water Pumped, Type I, Class I, Grade B	Fed Spec BB-N-411 NIIN 00-985-7275

Support Equipment Required

Quantity	Description	Reference Number
1	Oxygen Systems Components Test Stand	1172AS100 or 1316AS100
2	Adapter Assembly	Fabricate IAW figure 9-7A

NOTE

Using vent graph, convert a 30 lpm flow to H_2O.

1. Connect the pressure reducer outlet port to a 0 to 1800 psig regulated nitrogen source (other than the oxygen systems components test stand) using adapter (figure 9-7A) and fitting No. 4 to No. 5 or No. 5 to No. 5 as required.

2. Connect the pressure reducer relief valve port to N_2 INPUT connection (18) using adapter (figure 9-7A) and fitting No. 4 to No. 5 or No. 5 to No. 5 as required.

3. Place FLOW SELECTOR valve (M) in the SUIT SIMULATOR position.

4. Turn INLET PRESS. ON/OFF valve (L) on.

5. Open VENT PRESS. valve (H).

6. Using external regulated 0 to 1800 nitrogen source, slowly apply 170 psig as indicated on external regulator OUTLET PRESS. gage, VENT FLOW manometer (3) shall indicate at least 30 lpm flow.

7. Secure regulated nitrogen source.

WARNING

Depending on regulator being used with external regulated nitrogen source, it may be necessary to perform the following in order to bleed pressure from pressure reducer instead of performing step 9.

Turn T-handle on regulator attached to external nitrogen source counterclockwise, then slowly disconnect hose attached to the outlet port of the pressure reducer assembly to bleed pressure.

8. Open SYSTEM BLEED valve (S) and bleed test stand. Disconnect pressure reducer from test stand and secure all test stand valves.

9. Proceed to next test.

9-29. HIGH PRESSURE LEAKAGE TEST. To perform the High Pressure Leakage Test, proceed as follows:

Materials Required

Quantity	Description	Reference Number
As Required	Compound, Leak Detection, Type 1	MIL-L-25567
As Required	Lockwire	MS20995C20-4
As Required	Lockwire	MS20995C20-8
As Required	Nitrogen, Oil-free, Water Pumped, Type I, Class I, Grade B	Fed Spec BB-N-411 NIIN 00-985-7275

Support Equipment Required

Quantity	Description	Reference Number
1	Oxygen Systems Components Test Stand	1172AS100 or 1316AS100
2	Adapter Assembly	Fabricate IAW figure 9-7A

1. Cap the pressure reducer outlet port.

2. Uncap the pressure reducer inlet port and connect the inlet port to N_2 INPUT connection (18) using adapter (figure 9-7A) and fitting No. 4 to No. 5 or No. 5 to No. 5 as required.

3. Turn INLET PRESSURE ON/OFF valve (L) ON.

4. Using HIGH PRESS. REGULATOR (Q), slowly apply 1800 psig to the pressure reducer assembly.

5. Using leak detection compound, check the two main body gaskets for leakage (figure 9-8). No leakage is allowed.

6. Turn HIGH PRESS. REGULATOR (Q) to vent.

7. Open SYSTEM BLEED valve (S) and bleed pressure from test stand. Secure all test stand valves and disconnect pressure reducer assembly from test stand.

8. Ensuring retainer (17) does not turn, reassemble pipe boss (16) and O-ring (16A) to housing (37) with screws (14) and washers (15).

9. Install new lockwires (12 and 13) as in accordance with figure 9-11.

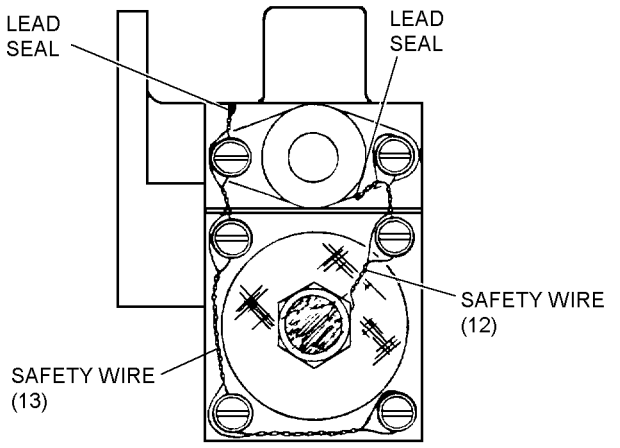

Figure 9-11. Safety Wire Installation Diagram

Section 9-4. Illustrated Parts Breakdown

9-30. GENERAL.

9-31. This section lists and illustrates the assemblies and detail parts associated with the Pressure Reducer Assemblies, P/N F103D000-1, F103D000-7, F103D000-11, and F103D000-15.

9-32. The Illustrated Parts Breakdown should be used during maintenance when requisitioning and identifying parts.

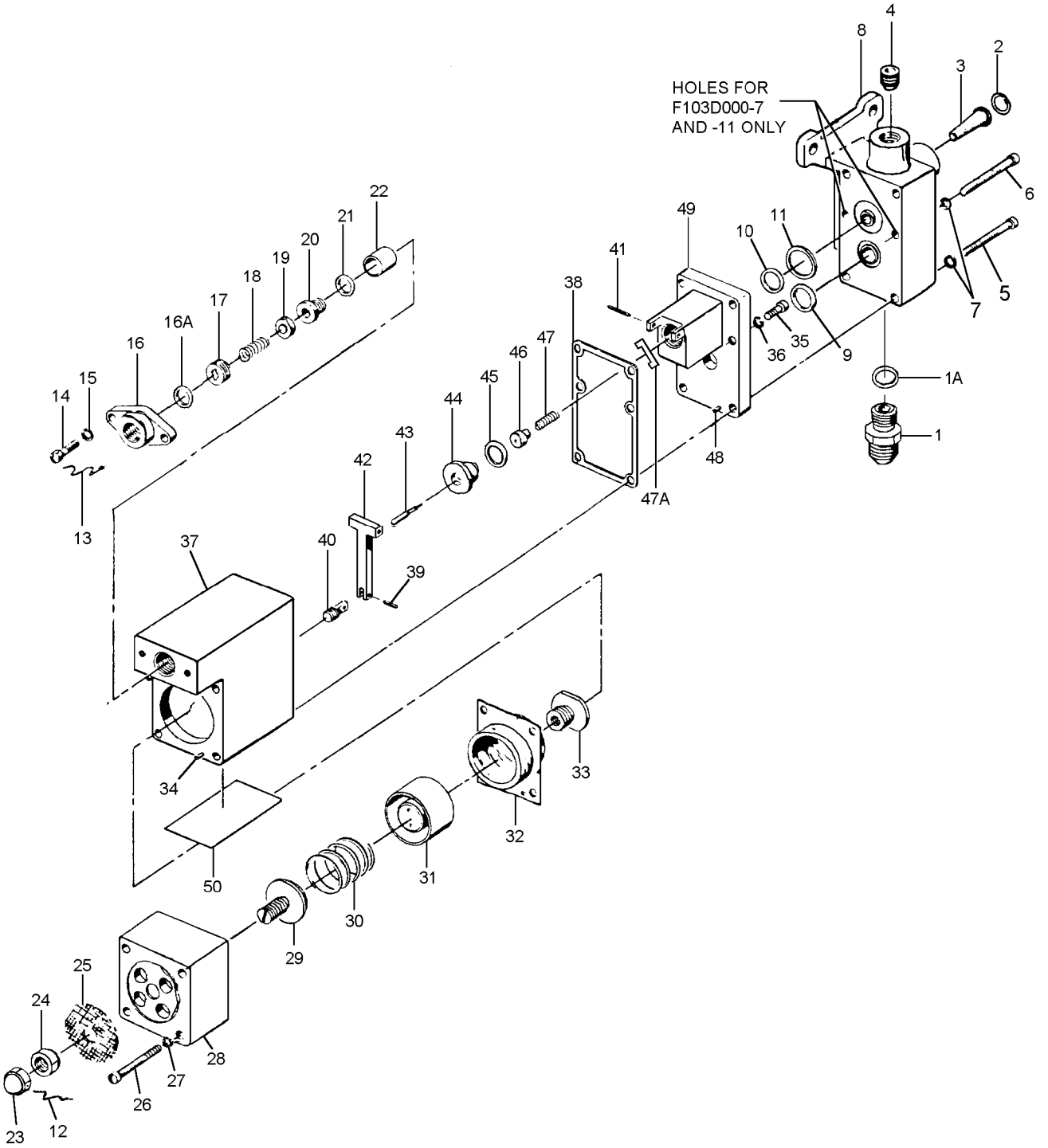

009012

Figure 9-12. Reducing Valve, P/Ns F103D000-1, F103D000-7, F103D000-11, and F103D000-15, IPB

Figure and Index Number	Part Number	Description 1 2 3 4 5 6 7	Units Per Assembly	Usable On Code
9-12	F103D000-1	REDUCING VALVE	REF	A
	F103D000-7	REDUCING VALVE	REF	B
	F103D000-11	REDUCING VALVE	REF	C
	F103D000-15	REDUCING VALVE	REF	D
	F103D005-1	. REDUCING VALVE ASSEMBLY	1	A
	F103D005-7	. REDUCING VALVE ASSEMBLY	1	B
	F103D005-11	. REDUCING VALVE ASSEMBLY	1	C
	F103D005-15	. REDUCING VALVE ASSEMBLY	1	D
-1	AN816-5C	. . NIPPLE	4	AB
	ER816-5C	. . NIPPLE (79470)	4	C
	MS21902J5	. . NIPPLE	4	D
-1A	1000-0004-905	. . O-RING	4	D
-2	0-521-72A	. . RING	1	
-3	14898	. . FILTER	1	
-4	F103D011-1	. . ORIFICE	1	
-5	AN500A6-22	. . SCREW	4	A
-6	FS106-632-12	. . SCREW	6	BC
	MS16995-18	. . SCREW	6	D
-7	AN935-6L	. . WASHER	4	A
	AN935-6L	. . WASHER	6	BC
-8	F103D004-1	. . MANIFOLD	1	A
	F103D004-3	. . MANIFOLD	1	BC
	B40872-1	. . BODY	1	D
-9	14909-7	. . O-RING	1	
-10	14909-6	. . O-RING	1	
-11	16276	. . RING	1	
-12	MS20995C20-4	. . WIRE	1	
-13	MS20995C20-8	. . WIRE	1	
-14	AN500A6-8	. . SCREW	2	ABC
	MS35265-28	. . SCREW	2	D
-15	AN935-6L	. . WASHER	2	
-16	17842	. . PIPE BOSS	1	ABC
	B40877-1	. . BOSS OVERFLOW	1	D
-16A	15697	. . O-RING	1	
-17	17948-1	. . RETAINER	1	
-18	F3981032	. . SPRING	1	
-19	17947	. . VALVE ASSEMBLY	1	
-20	16681	. . SEAT	1	
-21	14909-4	. . O-RING	1	
-22	16682	. . GUIDE	1	BC
-23	17887	. . NUT	1	
-24	AN315D4R	. . NUT	1	
-25	16904	. . SCREEN	1	
-26	AN500A6-20	. . SCREW	4	ABC
	B40954-1	. . SCREW	4	D
-27	AN935-6L	. . WASHER	4	
-28	16405	. . CYLINDER	1	ABC
	16405-3	. . CYLINDER	1	D

Figure and Index Number	Part Number	Description 1 2 3 4 5 6 7	Units Per Assembly	Usable On Code
9-12-29	16691	. . SCREW	1	
-30	16541	. . SPRING	1	
-31	17954	. . PISTON	1	
-32	17857	. . BELLOFRAM SEAL	1	
-33	17952	. . SCREW	1	
-34	17860	. . ROLL PIN	1	
-35	AN500A6-8	. . SCREW	2	A
-36	AN935-6L	. . WASHER	2	A
-37	17865-1	. . HOUSING	1	ABC
	17865-3	. . HOUSING	1	D
-38	17859	. . GASKET	1	
-39	17860	. . ROLL PIN	1	
-40	17848	. . SCREW	1	ABC
	MS21902J5	. . ADAPTER, Straight	1	D
-41	17864	. . ROLL PIN	1	
-42	17849	. . LEVER	1	
-43	17956	. . PIN	1	
-44	17929	. . SEAT ASSEMBLY	1	ABC
	17929-3	. . SEAT ASSEMBLY	1	D
-45	14909-7	. . O-RING	1	A
	F388-1157-1	. . O-RING	1	BC
-46	17958-1	. . VALVE	1	
-47	16727	. . SPRING	1	
-47A	B40879-1	. . SPRING GUIDE	1	D
-48	17860	. . ROLL PIN	1	
-49	17974	. . SUBMANIFOLD	1	
-50	F103D014-1	. . IDENTIFICATION PLATE	1	A
	F103D014-3	. . IDENTIFICATION PLATE	1	B
	F346-1151-1	. . IDENTIFICATION PLATE	1	C
	B40876-1	. . IDENTIFICATION PLATE	1	D
	F419-1020-3	OVERHAUL HARDWARE KIT	1	ABC
	B42493-1	OVERHAUL KIT	1	D
	F418-1020-2	CURE DATE ITEMS KIT	1	ABC

NUMERICAL INDEX

Part Number	Figure and Index Number	SM&R Code
AN315D4R	9-12-24	
AN500A6-8	9-12-14	
	9-12-35	
AN500A6-20	9-12-26	
AN500A6-22	9-12-5	
AN816-5C	9-12-1	
AN935-6L	9-12-7	
	9-12-15	
	9-12-27	
	9-12-36	
B40872-1	9-12-8	
B40876-1	9-12-50	
B40877-1	9-12-16	
B40879-1	9-12-47A	
B40954-1	9-12-26	
B42493-1	9-12-50	
ER816-5C	9-12-1	
FS106-632-12	9-12-6	
F103D000-1	9-12	
F103D000-11	9-12	
F103D000-7	9-12	
F103D004-1	9-12-8	
F103D004-3	9-12-8	
F103D005-1	9-12	
F103D005-11	9-12	
F103D005-15	9-12	
F103D005-7	9-12	
F103D011-1	9-12-4	
F103D014-1	9-12-50	
F103D014-3	9-12-50	
F346-1151-1	9-12-50	
F388-1157-1	9-12-45	
F3981032	9-12-18	
F418-1020-2	9-12-50	
F419-1020-3	9-12-50	
MS16995-18	9-12-6	
MS20995C20-4	9-12-6	
MS20995C20-8	9-12-13	
MS21902J5	9-12-1	
	9-12-40	

Part Number	Figure and Index Number	SM&R Code
MS35265-28	9-12-14	
0-521-72A	9-12-2	
14898	9-12-3	
14909-4	9-12-21	
14909-6	9-12-10	
14909-7	9-12-9	
	9-12-45	
15697	9-12-16A	
16276	9-12-11	
16405	9-12-28	
16405-3	9-12-28	
16541	9-12-30	
16681	9-12-20	
16682	9-12-22	
16691	9-12-29	
16727	9-12-47	
16904	9-12-25	
17842	9-12-16	
17848	9-12-40	
17849	9-12-42	
17857	9-12-32	
17859	9-12-38	
17860	9-12-34	
	9-12-39	
	9-12-48	
17864	9-12-41	
17865-1	9-12-37	
17865-3	9-12-37	
17887	9-12-23	
17929	9-12-44	
17929-3	9-12-44	
17947	9-12-19	
17948-1	9-12-17	
17952	9-12-33	
17954	9-12-31	
17956	9-12-43	
17958-1	9-12-46	
17974	9-12-49	

THIS PAGE INTENTIONALLY LEFT BLANK.