CHAPTER 4

OXYGEN COMPONENT CLEANING

Section 4-1. Description

4-1. GENERAL.

4-2. Cleaning of oxygen components shall be accomplished using procedural steps outlined in this chapter.

4-3. Two ultrasonic tanks manufactured by CAE Blackstone (figure 4-1) will be utilized in the following procedures. For leading particulars for the HT-1206 Ultrasonic Navy Oxygen Cleaning System, see table 4-1.

4-4. CONFIGURATION.

4-5. The HT-1206 Ultrasonic Navy Oxygen Cleaning System consists of the following components:

NOTE

All technical component terminology for the Ultrasonic Navy Oxygen Cleaning System is referenced to figure 4-1 unless otherwise noted.

1. Heated Ultrasonic Tank (1)

2. Parts Basket (2)

3. Stainless Steel Lid (3)

4. Tank (RED) ON/OFF Switch (4). For the temperature controller.

5. Temperature Control Knob (5). For adjusting the temperature from a range of 32°F to 212°F (0°C to 100°C.)

6. Generator (GREEN) ON/OFF Switch (6). For turning the ultrasonic mechanism on.

7. Fuse Receptacle (7)

8. Electrical Receptacle (8). The unit operates using 110/115 volt 60 Hz power. See figure 4-2 for wiring diagram of the ultrasonic tank.

9. Stainless Steel Drainage Valve (9)

Table 4-1. Leading Particulars

Voltage	120V 60 Hz
Fuse	8 Amp
Operating Frequency	40 kHz
Temperature Range	32°F to 212°F (0°C to 100°C)
Capacity	1.9 Gallons
Mounting	Free Standing
Exterior Dimensions	20 x 13 x 14 inches
Interior Working Dimensions (Without Basket)	11 1/2 x 5 3/4 x 7 1/2 inches
Interior Working Dimensions (With Basket)	9 1/2 x 3 3/4 x 3 3/4 inches
Weight	41 1/2 lb

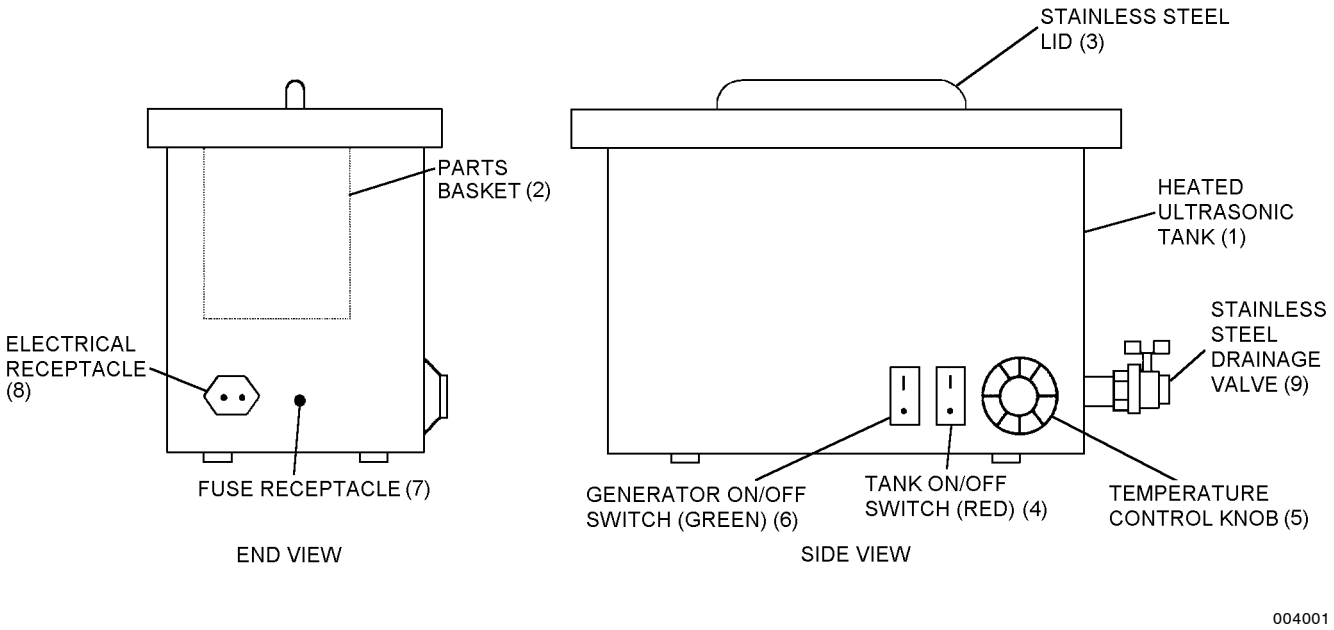

Figure 4-1. HT-1206 Ultrasonic Navy Oxygen Cleaning System

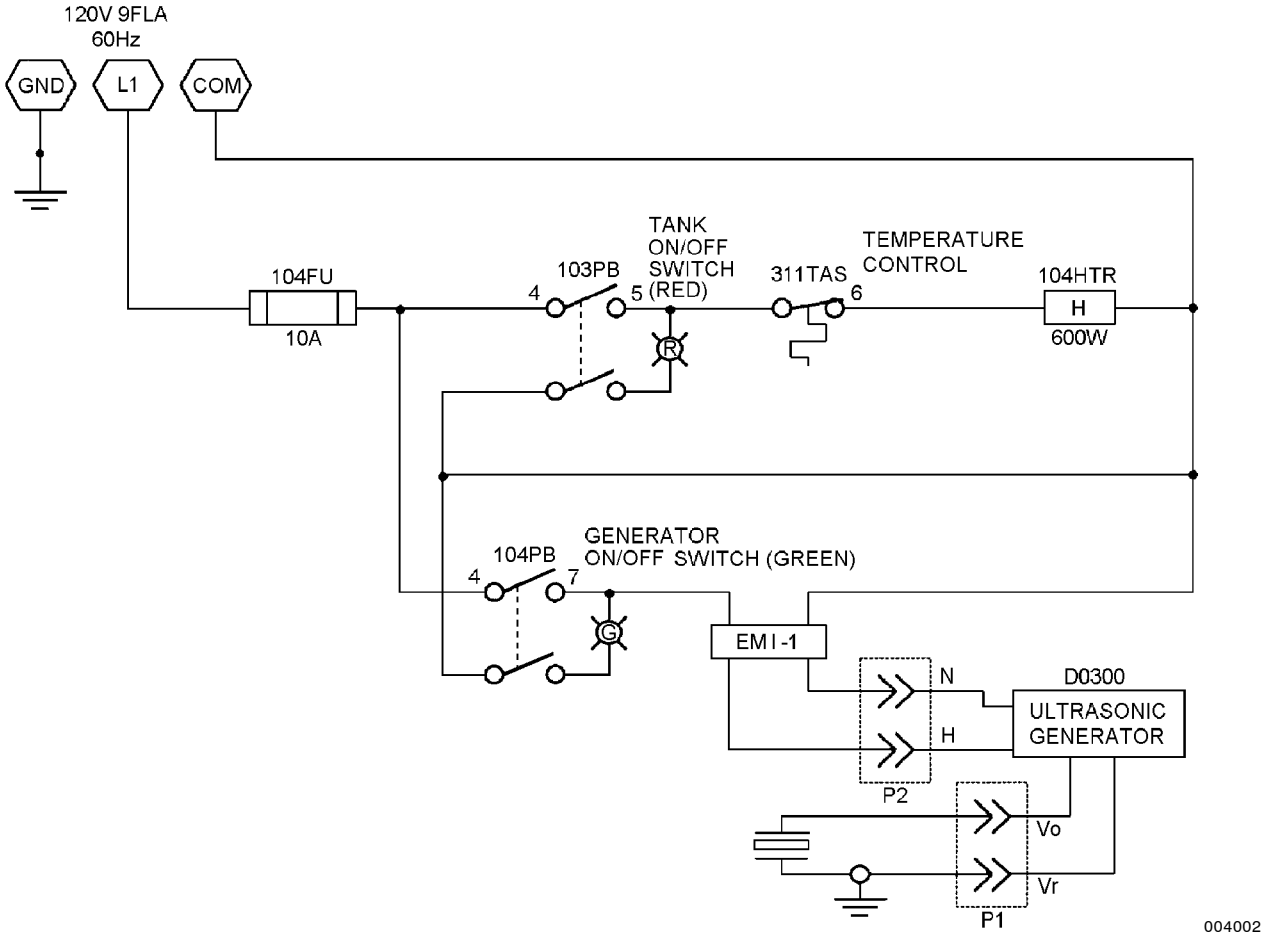

Figure 4-2. Wiring Diagram - Ultrasonic Navy Oxygen Cleaning System

Section 4-2. Modifications

4-5A. GENERAL.

4-5B. The 1.9 Gallon Ultrasonic tanks shall be modified in accordance with Support Equipment Change No. 5583.

Section 4-3. Maintenance

4-6. GENERAL.

4-7. This section contains procedural steps for the ultrasonic tank prior to the cleaning process. All work shall be performed in a clean and dust free area.

NOTE

Upon completion of any maintenance action (e.g. inspection, repair, modification), make necessary entries on appropriate form in accordance with OPNAVINST 4790.2 series.

Navy Oxygen Cleaner (NOC) and distilled water used in the cleaning process will be disposed of in accordance with federal, state and local instructions governing hazardous waste. An empty 5 gallon Navy Oxygen Cleaner container can be utilized to drain ultrasonic tanks and containers as required if authorized by local hazardous waste facility.

4-8. INSPECTION.

4-9. ACCEPTANCE INSPECTION. The Acceptance Inspection consists of a Visual Inspection followed by a Heater Test. The Heater Test shall be performed on the ultrasonic tank upon issue. Maintenance, troubleshooting and repair shall be done in accordance with the applicable technical manual.

4-10. Visual Inspection. To perform the Visual Inspection, proceed as follows:

1. Inspect the ultrasonic tanks for exterior damage.

2. Ensure power on/off switches and heat control knob are in working condition.

3. Ensure basket and lids are not damaged and fit correctly.

4. Ensure drain valve can be opened and closed.

5. Ensure power cord is in good working condition.

4-11. Ultrasonic Tank Heater Test. The Heater Test is required upon receipt of the ultrasonic tank and after any maintenance repair action is performed on the ultrasonic tank in accordance with the applicable technical manual. To perform the heater test, proceed as follows:

Materials Required

Quantity	Description	Reference Number
As Required	Distilled Water	NIIN 00-356-4936

Support Equipment Required

Quantity	Description	Reference Number
1	Thermometer, Dial (50 - 300° F)	931F40 NIIN 00-174-6239
2	Ultrasonic Tank and Generator, Blackstone	Model HT-1206-NOC

NOTE

Two ultrasonic tanks are required for the Navy Oxygen Cleaning process. One ultrasonic tank will be used for the mixture of Navy Oxygen Cleaning agent and distilled water, and one ultrasonic tank will be used for the distilled water rinse.

Ultrasonic tanks require a heater test upon issue, distilled water will be used in both ultrasonic tanks for this inspection only.

1. Clean ultrasonic tank in accordance with paragraph 4-12.

2. Connect ultrasonic tank power cord to a 110/115 volt power outlet.

WARNING

To guard against ELECTRICAL SHOCK, ensure fluids are not splashed on switches or power cords during filling of ultrasonic tank.

3. Ensure drain valve on ultrasonic tank is closed.

4. Pour 100% distilled water into ultrasonic tank to fill line (approximately 1 to 2 inches from the top).

NOTE

It should take approximately 60 minutes for the distilled water to reach 150°F.

5. Turn tank (RED) ON/OFF switch to ON. Set heat control knob to 150°F and heat distilled water for 60 minutes. After 60 minutes, use thermometer and check temperature of distilled water in ultrasonic tank. The distilled water shall reach an operating temperature of 150°F. If temperature is slightly below 150°F adjust heat control knob to attain required temperature. If distilled water in ultrasonic tank fails to reach operating temperature within 90 minutes, troubleshoot ultrasonic tank in accordance with applicable technical manual.

6. Turn generator (GREEN) ON/OFF switch to ON. An audible hissing sound should be heard and the distilled water should have a visible vibration/agitation.

7. If no discrepancies are noted, proceed to paragraph 4-14 ultrasonic tank draining. If ultrasonic tank fails steps 5 or 6, secure power and proceed to applicable technical manual for maintenance.

4-12. ULTRASONIC TANK AND CONTAINER CLEANING. The ultrasonic tank and pre-cleaning containers will require cleaning prior to first use or when the shake test or pH test results indicate changing of the solution. To clean the ultrasonic tank and pre-cleaning containers, proceed as follows:

Materials Required

Quantity	Description	Reference Number
1	Container, Disposable, 5 Gallon (Authorized by Local Hazardous Waste Facility)	—
As Required	Gloves	NIIN 00-462-0832
As Required	Navy Oxygen Cleaner	OCC-RTU NIIN 01-389-3859
As Required	Paper Towel, Type VI (Industrial Wiping)	A-A-1432 NIIN 00-823-9772

Support Equipment Required

Quantity	Description	Reference Number
As Required	Apron, Impermeable, Cotton Duck, Rubber Coated	MIL-A-41829 (CAGE 81349) NIIN 00-082-6108
As Required	Goggles or Face Shield	NIIN 00-052-3776
2	Ultrasonic Tank and Generator, Blackstone	Model HT-1206-NOC
3	Water Pail, 2 to 3 Gallon, Plastic or Metal	Local Purchase

NOTE

Eye protection, gloves and apron are required to be worn during any cleaning process.

If the Navy Oxygen Cleaner is spilled, wipe up immediately, hard white deposits will form if allowed to dry. Area can be cleaned with either a mixture of one pound citric acid to one gallon of water, or white vinegar. After spill is cleaned, wipe down affected area with distilled water.

1. Don gloves, apron and eye protection. Wash donned gloves in warm tap water to remove all traces of talcum powder prior to cleaning ultrasonic tank or handling cleaning agents.

NOTE

A 5 gallon disposal container, authorized by local hazardous waste facility should be available to dispose of cleaning solutions.

2. Ultrasonic tanks/containers shall be cleaned as follows:

a. Pour a small amount of Navy Oxygen Cleaner into ultrasonic tank or container. Wipe down all sides with wetted paper towel. Discard paper towel.

b. Drain ultrasonic tank contents into disposal container by opening drain valve. After ultrasonic tank has drained, close drain valve.

c. Pour a small amount of distilled water into ultrasonic tank or container. Wipe down all sides with new wetted paper towel. Discard paper towel.

d. Drain distilled water from ultrasonic tank into disposal container by opening drain valve. After ultrasonic tank has drained, close drain valve.

NOTE

Step e is required on the distilled water ultrasonic tank and pre-cleaning containers only.

e. For distilled water ultrasonic tank and pre-clean containers only, repeat steps c and d.

3. Wipe down all sides of the ultrasonic tank with a clean, lint free, paper towel until dry. Ensure ultrasonic tank or container is visibly clean of particulates.

4. Pre-cleaning and rinse containers shall be cleaned prior to each use by using procedures in step 2 and 3.

5. If ultrasonic tanks are to be used to clean components proceed to paragraph 4-13. Remove gloves.

6. If no component cleaning is required, ultrasonic tanks can be stored at this time.

4-13. ULTRASONIC TANK FILLING. To fill the ultrasonic tanks for use, proceed as follows:

Materials Required

Quantity	Description	Reference Number
As Required	Alkacid Test Kit	A-988 NIIN 00-420-0507
As Required	Distilled Water	NIIN 00-356-4936
As Required	Gloves	NIIN 00-462-0832
As Required	Navy Oxygen Cleaner	OCC-RTU NIIN 01-389-3859

Support Equipment Required

Quantity	Description	Reference Number
As Required	Apron, Impermeable, Cotton Duck, Rubber Coated	MIL-A-41829 (CAGE 81349) NIIN 00-082-6108
2	Bottle, Small Plastic, (Specify Clear)	NIIN 00-042-8421
As Required	Goggles or Face Shield	NIIN 00-052-3776
1	Tongs, Rubber-ended	NIIN 00-293-0808
2	Ultrasonic Tank and Generator, Blackstone	Model HT-1206-NOC
3	Water Pail, 2 to 3 Gallon, Plastic or Metal	Local Purchase

1. Ensure ultrasonic tank has been cleaned in accordance with paragraph 4-12.

2. Ensure drain valve on ultrasonic tank is closed.

WARNING

Ensure level of Navy Oxygen Cleaner solution and distilled water do not drop below fill line or 2 inches from the top of the ultrasonic tanks. Damage to the heating coil could result.

Keep lids on ultrasonic tanks at all times to guard against degradation of solution.

3. Fill one ultrasonic tank with 100% distilled water. Ensure ultrasonic tank is filled to fill line (1 to 2 inches from the top of tank). Perform pH test as follows:

a. Tear off approximately 2 inches of number 03 pH paper. Dip half the paper into the distilled water ultrasonic tank. Remove pH paper.

b. Match the color of the wetted sample with the color coded pH scale on the tape container.

c. If pH is between 6.5 and 8.0, the sample is good. Proceed to step 4.

d. If pH exceeds 8.0, the distilled water ultrasonic tank has been contaminated with Navy Oxygen Cleaner. Re-clean ultrasonic tank in accordance with paragraph 4-12, steps 2 and 3.

4. Don gloves, apron and eye protection. Wash donned gloves in warm tap water to remove all traces of talcum powder prior to handling cleaning agents.

CAUTION

Ensure the solution mixture of Navy Oxygen Cleaner and Distilled Water is approximately 50% Navy Oxygen Cleaner and 50% distilled water. A 100% solution of the Navy Oxygen Cleaner will damage anodized aluminum parts.

5. Pour approximately one gallon of Navy Oxygen Cleaner into container marked pre-clean (paragraph 4-17, step 7) and perform shake test as follows:

a. Using rubber-ended tongs, grasp small bottle and take a sample of the Navy Oxygen Cleaner. Place cap on bottle.

b. Vigorously shake bottle for 15 seconds. Bubbles shall form on the surface of the Navy Oxygen Cleaner.

c. If bubbles dissipate in approximately 2 minutes, the cleaner is good, proceed to step e.

d. If bubbles remain 5 or more minutes, the Navy Oxygen Cleaner is contaminated. Turn in Navy Oxygen Cleaner to local hazardous waste coordinator. Clean container in accordance with paragraph 4-12, steps 2 and 3.

e. Pour contents of bottle back into container. Thoroughly rinse sample bottle with warm tap water and allow to air dry for next use. Proceed to step 6.

6. Pour the Navy Oxygen Cleaner from the container used in step 5 into the second ultrasonic tank. Using approximately 1 gallon of distilled water, fill the remainder of the ultrasonic tank to the full line (1 to 2 inches from the top).

7. Connect both ultrasonic tank power cords to 110/115 volt power outlet.

8. Ultrasonic tanks are ready for use. Tanks can remain full and covered when not in use. Proceed to Section 4-3 for component cleaning.

4-14. ULTRASONIC TANK DRAINING. To drain the ultrasonic tank, proceed as follows:

Materials Required

Quantity	Description	Reference Number
1	Container, Disposable, 5 Gallon (Authorized by Local Hazardous Waste Facility)	—

Support Equipment Required

Quantity	Description	Reference Number
2	Ultrasonic Tank and Generator, Blackstone	Model HT-1206-NOC

1. Ensure tank (RED) ON/OFF switch and generator (GREEN) ON/OFF switch are in the OFF position. Allow contents to cool enough to safely drain ultrasonic tank.

2. Unplug power cord from ultrasonic tank to be drained.

NOTE

A 5 gallon container, authorized by local hazardous waste facility should be available to dispose of solutions during ultrasonic tank draining.

3. Position 5 gallon container under drain valve on ultrasonic tank. Slowly open drain valve and drain ultrasonic tank. Close drain valve.

4. Proceed to paragraph 4-12, Ultrasonic Tank Cleaning.

Section 4-4. Component Cleaning

4-15. GENERAL.

4-16. This section contains procedural steps for the pre-cleaning, cleaning process, inspection and component storage. For cleaning of oxygen lines refer to Section 4-5.

WARNING

Disposable gloves shall be worn while working with Navy Oxygen Cleaner. Although the substance is not toxic, it is very alkaline and can cause drying of the hands and burning of open sores. Avoid prolonged breathing of vapors while solution is heated. Eye protection shall be worn during cleaning process.

NOTE

A 5 gallon disposal container, authorized by local hazardous waste facility should be available to dispose of pre-clean solutions after cleaning process.

4-17. CLEANING PREPARATION. To prepare for the cleaning process, proceed as follows:

Materials Required

Quantity	Description	Reference Number
As Required	Detergent, Non-ionic, Type 1	MIL-D-16791 NIIN 00-282-9699
As Required	Distilled Water	NIIN 00-356-4936
As Required	Gloves	NIIN 00-462-0832
As Required	Navy Oxygen Cleaner	OCC-RTU NIIN 01-389-3859

Support Equipment Required

Quantity	Description	Reference Number
As Required	Apron, Impermeable, Cotton Duck, Rubber Coated	MIL-A-41829 (CAGE 81349) NIIN 00-082-6108
2	Bottle, Small Plastic, (Specify Clear)	NIIN 00-042-8421
As Required	Goggles or Face Shield	NIIN 00-052-3776
1	Thermometer, Dial (50-300° F)	931F40 NIIN 00-174-6239
1	Tongs, Rubber-ended	NIIN 00-293-0808
2	Ultrasonic Tank and Generator, Blackstone	Model HT-1206-NOC
3	Water Pail, 2 to 3 Gallon, Plastic or Metal	Local Purchase

1. Ensure ultrasonic tanks are visibly clean. If Navy Oxygen Cleaner or distilled water ultrasonic tanks appear dirty with particulate, drain ultrasonic tank/tanks in accordance with paragraph 4-14.

2. Don gloves, apron and eye protection. Wash donned gloves in warm tap water to remove all traces of talcum powder prior to handling cleaning agents.

3. Using rubber-ended tongs grasp small bottle and carefully dip bottle into Navy Oxygen Cleaner ultrasonic tank and take a sample of the Navy Oxygen Cleaner. Place cap on bottle and perform shake test as follows:

a. Vigorously shake bottle for 15 seconds. Bubbles shall form on the surface of the Navy Oxygen Cleaner.

b. If bubbles dissipate in approximately 2 minutes, the Navy Oxygen Cleaner is good, proceed to step 4.

c. If bubbles remain 5 minutes or more, the Navy Oxygen Cleaner is contaminated. Proceed to paragraph 4-14, Ultrasonic Tank Draining.

d. After test is completed, pour contents of bottle back into Navy Oxygen Cleaner ultrasonic tank. Thoroughly rinse sample bottle with warm tap water and allow to air dry for next use.

4. Ensure ultrasonic tanks are filled to full line (1 to 2 inches from the top of ultrasonic tank). If Navy Oxygen Cleaner ultrasonic tank is low, add equal parts of Navy Oxygen Cleaner and distilled water until ultrasonic tank is full. If distilled water ultrasonic tank is low, add distilled water as required until ultrasonic tank is full.

5. Connect ultrasonic tank power cords to 110/115 volt outlet.

NOTE

Both ultrasonic tank solutions will take approximately 60 minutes to reach 150°F.

Steps 7 and 8 can be performed while heating process in step 6 is being performed.

6. Turn tank (RED) ON/OFF switches on both ultrasonic tanks to ON. Set heat control knobs to 150°F on both ultrasonic tanks and heat for 60 minutes.

7. Using three 2 to 3 gallon containers; Mark the first container pre-clean detergent. Mark the second container rinse 1 and mark the third container rinse 2. Clean containers in accordance with paragraph 4-12, steps 2 and 3.

CAUTION

When performing step 8 do not use more than 1/2 ounce of non-ionic detergent to one gallon of distilled water. Cleaning effectiveness does not improve with additional detergent. Excessive amount of detergent will be difficult to rinse off and increase the chance of carry-over into Navy Oxygen Cleaner solution.

8. Pour one gallon of distilled water into the container marked as pre-clean detergent. Add 1/2 an ounce of non-ionic detergent and mix thoroughly.

9. Pour one gallon of distilled water into rinse container 1. Pour one gallon of distilled water into rinse container 2.

WARNING

Liquids will be hot. Do not put hands into ultrasonic tanks.

NOTE

If temperature cannot be achieved during step 10 within 90 minutes, stop the cleaning process and troubleshoot the ultrasonic tank in accordance with the appropriate technical manual.

10. Using thermometer, ensure distilled water and Navy Oxygen Cleaner ultrasonic tanks have reached 150°F.

11. Turn generator (GREEN) ON/OFF switches on both ultrasonic tanks to ON. Ensure both ultrasonic tanks have a audible hissing sound and a visible vibration of liquid. Allow both ultrasonic tanks to operate for 10 minutes to de-gas liquids prior to putting components into the ultrasonic tanks. Proceed to paragraph 4-18 for component cleaning. Paragraph 4-18, steps 1 through 4 can be performed while ultrasonic tanks are de-gassing.

4-18. CLEANING OF COMPONENTS. To perform component cleaning, proceed as follows:

Materials Required

Quantity	Description	Reference Number
As Required	Alkacid Test Kit	A-988 NIIN 00-420-0507
As Required	Bag, Plastic	MIL-B-117 (CAGE 81349)
As Required	Detergent, Non-ionic, Type 1	MIL-D-16791 NIIN 00-282-9699
As Required	Distilled Water	NIIN 00-356-4936
As Required	Gloves	NIIN 00-462-0832
As Required	Navy Oxygen Cleaner	OCC-RTU NIIN 01-389-3859
As Required	Nitrogen, Oil-free, Water Pumped, Type I, Class I, Grade B	Fed Spec BB-N-411 NIIN 00-985-7275

Support Equipment Required

Quantity	Description	Reference Number
As Required	Apron, Impermeable, Cotton Duck, Rubber Coated	MIL-A-41829 (CAGE 81349) NIIN 00-082-6108
2	Bottle, Small Plastic, (Specify Clear)	NIIN 00-042-8421
As Required	Brush, Acid Swabbing	A-A-289 NIIN 00-514-2417
As Required	Goggles or Face Shield	NIIN 00-052-3776
1	Tongs, Rubber-ended	NIIN 00-293-0808
2	Ultrasonic Tank and Generator, Blackstone	Model HT-1206-NOC
3	Water Pail, 2 to 3 Gallon, Plastic or Metal	Local Purchase

1. Visually inspect components for foreign material, contamination and stickers etc. Remove as much foreign materials as possible prior to pre-cleaning components.

NOTE

The pre-cleaning process is extremely important, extreme care should be taken to ensure all items have been thoroughly cleaned and rinsed. Failure to pre-clean components thoroughly will result in excessive man hours draining, cleaning and filling ultrasonic tanks.

2. Place component into pre-clean solution container. Ensure component is submerged completely. Scrub each component in the solution with a soft bristle brush. Use additional brushes as required to clean passageways and ports if required.

3. Remove component and place in rinse container 1. Agitate component several times. Remove component and shake off excess water. Visually inspect component for contamination. If component is visually clean perform step 4. If component is visually contaminated repeat steps 2 and 3.

NOTE

Several components can be placed in the basket. Ensure components are not overlapping or stacked on each other.

4. Place component into ultrasonic tank basket. If additional components require cleaning, perform steps 1 through 4. If not, proceed to step 5.

WARNING

Liquids will be hot. Do not put hands into ultrasonic tanks. Use rubber-ended tongs to deposit and remove parts.

Keep ultrasonic tank lid installed at all times. Lids should be removed only as required for installing/removing parts from basket, checking temperature, taking samples or agitating components.

5. This cleaning process step requires 15 minutes to complete and shall be performed by placing parts basket into ultrasonic tank of the 50% solution of Navy Oxygen Cleaner. Agitate parts twice at 5 minute intervals by manually grasping parts basket handles and shake submerged parts in basket several times. Rubber-ended tongs can also be used to agitate parts during this process. After 15 minutes has elapsed, immediately perform step 6.

6. Turn Generator (GREEN) ON/OFF switch on Navy Oxygen Cleaner ultrasonic tank to OFF. Perform shake test as follows:

a. Using rubber-ended tongs, grasp small bottle and take a sample of the Navy Oxygen Cleaner. Place cap on bottle.

b. Vigorously shake bottle for 15 seconds. Bubbles will form on the surface of the Navy Oxygen Cleaner.

c. If bubbles dissipate in approximately 2 minutes the cleaner is good, proceed to step e.

d. If bubbles remain 5 or more minutes, the Navy Oxygen Cleaner is contaminated. Proceed to step 7.

e. Pour contents of bottle back into Navy Oxygen Cleaner ultrasonic tank. Thoroughly rinse sample bottle with warm tap water and allow to air dry for next use. Proceed to step 8.

7. Remove parts and immediately rinse with distilled water. Turn tank (RED) ON/OFF switch to OFF. Allow ultrasonic tank to cool. The ultrasonic tank shall be drained, cleaned and filled in accordance with paragraphs 4-14, 4-12 and 4-13. The parts shall be re-cleaned again accordance Section 4-4, Component Cleaning.

8. Remove parts basket. Immediately remove parts from basket and rinse components in rinse container 2.

9. Place parts in rinse ultrasonic tank basket. Place basket of parts in the ultrasonic tank with distilled water. Allow parts to agitate for 5 minutes.

10. Turn Generator (GREEN) ON/OFF switch on distilled water tank to OFF. Remove gloves and perform pH test as follows:

a. Tear off approximately 2 inches of number 03 pH paper. Dip half the paper into the distilled water ultrasonic tank. Remove pH paper.

b. Match the color of the wetted sample with the color coded pH scale on the tape container.

c. IF pH is between 6.5 and 8.0, the sample is good. Proceed to step 12.

d. If pH exceeds 8.0, the distilled water ultrasonic tank has been contaminated with Navy Oxygen Cleaner. Proceed to step 11.

11. Turn tank (RED) ON/OFF switch to OFF. Allow ultrasonic tank to cool. The ultrasonic tank shall be drained, cleaned and filled in accordance with paragraphs 4-14, 4-12, and 4-13. Repeat steps 9 and 10 until pH sample passes test.

12. Remove parts and blow dry larger parts with oil-free nitrogen. Allow smaller parts to air dry on clean surface. Ensure that parts are completely dry before reassembling.

13. If no other component cleaning is required, place tank (RED) ON/OFF switches on both ultrasonic tanks to OFF. Ensure lids are installed on ultrasonic tanks. If additional component cleaning is required, repeat paragraph 4-17, steps 1 through 12.

14. Prior to installation, wash all silicone rubber parts in distilled water and blow dry with oil-free nitrogen.

15. Cleaned parts shall be sealed in plastic bags for storage. Bag all complete assemblies that are not immediately returned to service.

Section 4-5. Oxygen Line Cleaning

4-19. GENERAL.

4-20. This section contains procedural steps for oxygen line cleaning.

4-21. CLEANING OF OXYGEN LINES.

Materials Required

Quantity	Description	Reference Number
As Required	Cleaning Compound, Oxygen, Type I	MIL-C-81302 (CAGE 81349)
As Required	Nitrogen, Oil-free, Water Pumped, Type I, Class I, Grade B	Fed Spec BB-N-411 NIIN 00-985-7275
As Required	Soap, Liquid, Ivory Dishwashing or Equivalent	Purchase Locally

Support Equipment Required

Quantity	Description	Reference Number
1	Cup and Gun Assembly	NIIN 00-270-1044
1	Regulator, Nitrogen	9-580 or Equivalent

WARNING

Do not use oil, or any material containing oil, in conjunction with oxygen equipment. Oil, even in a minute quantity, coming in contact with oxygen can cause explosion or fire. Dust, lint and fine metal particles are also dangerous.

Use only small amounts of oxygen cleaning compound at a time. Use in a well ventilated open space. Avoid prolonged breathing. Oxygen cleaning compound vapors are hazardous and can cause death if too much is inhaled.

1. Mix a solution of Ivory Dishwashing Liquid and warm water in a clean container.

2. Plug one end of the oxygen line to be cleaned. Pour solution of dishwashing liquid and warm water into line.

3. Plug remaining end of oxygen line and shake line to agitate dishwashing solution.

4. Unplug one end of oxygen line and pour dishwashing solution out of oxygen line.

5. Repeat steps 2 through 4 four more times.

6. Remove plugs from both ends of oxygen line.

7. Clean fitting ends of oxygen line with dishwashing solution using a soft bristle brush.

8. Thoroughly rinse oxygen line of all dishwashing solution using warm water.

WARNING

When using oxygen cleaning compound, ensure space is well ventilated. Avoid prolonged breathing of oxygen cleaning compound vapors.

9. Fill pint container cup of spray gun assembly with oxygen cleaning compound.

10. Connect nitrogen regulator to an oil free nitrogen supply cylinder.

11. Connect cup and gun assembly to the regulated nitrogen source.

12. Ensure nitrogen regulator adjuster knob is back out counterclockwise until spring tension is released.

13. Turn on nitrogen supply cylinder.

14. Hold oxygen line pointing down with one end in a container such as a bucket.

15. Point nozzle of gun assembly into end of oxygen line.

16. Turn nitrogen adjuster knob clockwise until 30 psig is indicated on nitrogen regulator outlet gage.

17. Spray interior of oxygen line until contents of gun cup assembly is half full (approximately 1/2 cup remaining).

18. Turn nitrogen regulator counterclockwise until spring tension is released and close nitrogen supply cylinder.

19. Using oxygen cleaning compound wipe entire exterior of oxygen line clean.

20. Purge oxygen line with heated nitrogen until dry and odor free.

21. Cleaned oxygen line shall be capped and bagged (if possible) after any cleaning process. The oxygen line shall remain capped until placed in service.

Section 4-6. Oxygen Line Cleaning (Using Oxygen Line Flushing Set)

4-22. GENERAL.

4-23. This section contains procedural steps for oxygen line cleaning.

4-24. CLEANING OF OXYGEN LINES USING OXYGEN LINE FLUSHING SET.

NOTE

Some activities may not have received the oxygen line flushing set. For those activities, oxygen line cleaning must be accomplished by using procedures outlined in Section 4-5 of this chapter, until receipt of the oxygen line flushing set.

Materials Required

Quantity	Description	Reference Number
As Required	Detergent, Non-Ionic, Type 1	MIL-D-16791 NIIN 00-282-9699
As Required	Distilled Water	NIIN 00-356-4936
As Required	Gloves	NIIN 00-462-0832
As Required	Navy Oxygen Cleaner	OCC-RTU NIIN 01-389-3859

Support Equipment Required

Quantity	Description	Reference Number
As Required	Apron, Impermeable, Cotton Duck, Rubber Coated	MIL-A-41829 (CAGE 81349) NIIN 00-082-6108
2	Bottle, Small, Plastic, Clear	NIIN 00-042-8421
As Required	Goggles or Face Shield	NIIN 00-052-3776
1	Thermometer, Dial (50-300°F)	931F40 NIIN 00-174-6239
2	Ultrasonic Tank and Generator, Blackstone	Model HT-1206-NOC
3	Water Pail, 2 to 3 Gallon, Plastic or Metal	Local Purchase
1	Tongs, Rubber-ended	NIIN 00-293-0808
1	Purge Unit, Aircraft and Liquid Oxygen Converter	3447AS100-1
1	Oxygen Line Flushing Set	3719AS100-1

1. Ensure ultrasonic tanks are visibly clean. If Navy Oxygen Cleaner or distilled water ultrasonic tanks appear dirty with particulate, drain ultrasonic tank/tanks in accordance with paragraph 4-14.

2. Don gloves, apron, and eye protection. Wash donned gloves in warm tap water to remove all traces of talcum powder prior to handling cleaning agents.

3. Using rubber-ended tongs, grasp small bottle and carefully dip bottle into Navy Oxygen Cleaner ultrasonic tank and take a sample of the Navy Oxygen Cleaner. Place cap on bottle and perform shake test as follows:

a. Vigorously shake bottle for 14 seconds. Bubbles shall form on the surface of the Navy Oxygen Cleaner.

b. If bubbles dissipate in approximately 2 minutes, the Navy Oxygen Cleaner is good. Proceed to step 3.d.

c. If bubbles remain 5 or more minutes, the Navy Oxygen Cleaner is contaminated. Proceed to step 4.

d. Pour contents of bottle back into Navy Oxygen Cleaner ultrasonic tank. Thoroughly rinse sample bottle with warm water and allow to air dry for next use. Proceed to step 5.

4. The ultrasonic tank shall be drained, cleaned and filled in accordance with paragraphs 4-14, 4-12, and 4-13.

5. Ensure ultrasonic tanks are filled to full line (1 to 2 inches from top of ultrasonic tank). If Navy Oxygen Cleaner ultrasonic tank is low, add equal parts of Navy Oxygen Cleaner and distilled water until ultrasonic tank is full. If distilled water in ultrasonic tank is low, add distilled water as required until ultrasonic tank is full.

6. Connect ultrasonic tank power cords to 110/115 volt outlet.

NOTE

Both ultrasonic tank solutions will take approximately 60 minutes to reach 150°F. Steps 8 and 9 can be performed while heating process in step 7 is being performed.

7. Turn tank (RED) ON/OFF switches on both ultrasonic tanks to ON. Set heat control knobs to 150°F on both ultrasonic tanks and heat for 60 minutes.

8. Pre-clean line to be cleaned using non-ionic detergent in accordance with paragraph 4-18, steps 1 thru 3.

NOTE

Figure 4-3 illustrates the Oxygen Line Flushing Set with 1.9 gallon ultrasonic tank. Index numbers refer to Figure 4-3 unless otherwise noted.

Not all oxygen line adapters are included in set, some adapters will have to be locally procured.

9. Open Oxygen Line Flushing Set lid and locate proper size adapters for oxygen line to be cleaned.

NOTE

Tighten all adapters hand tight, then 1 to 2 full turns more.

10. Connect one line adapter to outlet of pump (1). Connect second adapter to end of return line (2) without quick disconnect. Mark this line “Return Line.” Connect line to be cleaned (3) between pump outlet line adapter and return line.

11. Connect end of return line (2) with quick disconnect to quick connect inlet (4) of NOC filter.

12. Remove hose assembly with two quick disconnects (5) from lid storage. Connect one end to quick connect of the outlet (6) of NOC filter. Mark this line "NOC Only."

13. Connect the other end of hose assembly (5) to the quick connect (7) of modified lid on the NOC tank (8).

14. Remove another hose assembly with two quick-disconnects (9) and connect one end to the quick connect inlet (11) of the pump. Connect the other end to the quick connect (10) of the outlet of the NOC tank. Mark this line "NOC Only."

15. Ensure regulator knob on air supply is turned fully counterclockwise.

16. Connect air supply (12) to pump quick connect.

WARNING

Liquids will be hot. Do not put hands into ultrasonic tanks.

NOTE

If temperature cannot be achieved during step 17 within 90 minutes, stop the cleaning process and troubleshoot the ultrasonic tank in accordance with the appropriate technical manual.

17. Using thermometer, ensure NOC tank and distilled water tanks have reached a temperature of 150°F.

18. Turn shutoff valve on NOC tank to the OPEN position.

19. Slowly adjust air supply by turning regulator knob clockwise until 80 psi is indicated on the air pressure gage.

NOTE

As pump is running, check to ensure liquid is not below dotted line. If liquid is below, add equal amounts of distilled water and NOC to NOC tank.

20. Allow cleaning process to circulate for 30 minutes.

21. After 30 minutes, reduce air supply pressure by turning regulator knob counterclockwise until 20 psi is on air pressure gage.

22. Turn shutoff valve on NOC tank to the CLOSED position.

23. Let pump cycle 8 to 10 times and then turn regulator knob counterclockwise until 0 psi is on air pressure gage and pump stops.

4-25. FIRST RINSE.

WARNING

Lines will be hot; be sure to use gloves when removing and installing lines on tank.

NOTE

Index numbers for steps 1 and 2 refer to Figure 4-3.

1. Remove hose assembly (9) from pump inlet quick connect fitting (11) and NOC tank outlet quick connect fitting (10). Drain liquid from tubing, and store in Oxygen Line Flushing Set lid.

2. Remove hose assembly (5) from NOC tank lid quick connect fitting (7) and NOC filter outlet quick connect fitting (6). Drain liquid from tubing, and store in Set lid.

NOTE

Index numbers for steps 3 thru 8 refer to Figure 4-4.

3. Remove from lid of Set one hose assembly with only one quick disconnect (13) and mark "Rinse Line #1."

4. Connect quick disconnect of hose assembly (13) to quick connect on inlet (11) of pump and place other end into 5 gallon container (14) of distilled water.

5. Disconnect return line (2) from inlet (4) of NOC filter and place into empty 5 gallon container (15) marked "Old NOC/Water."

6. Turn regulator knob clockwise until 20 psi is on air pressure gage and cycle pump 8 to 10 times.

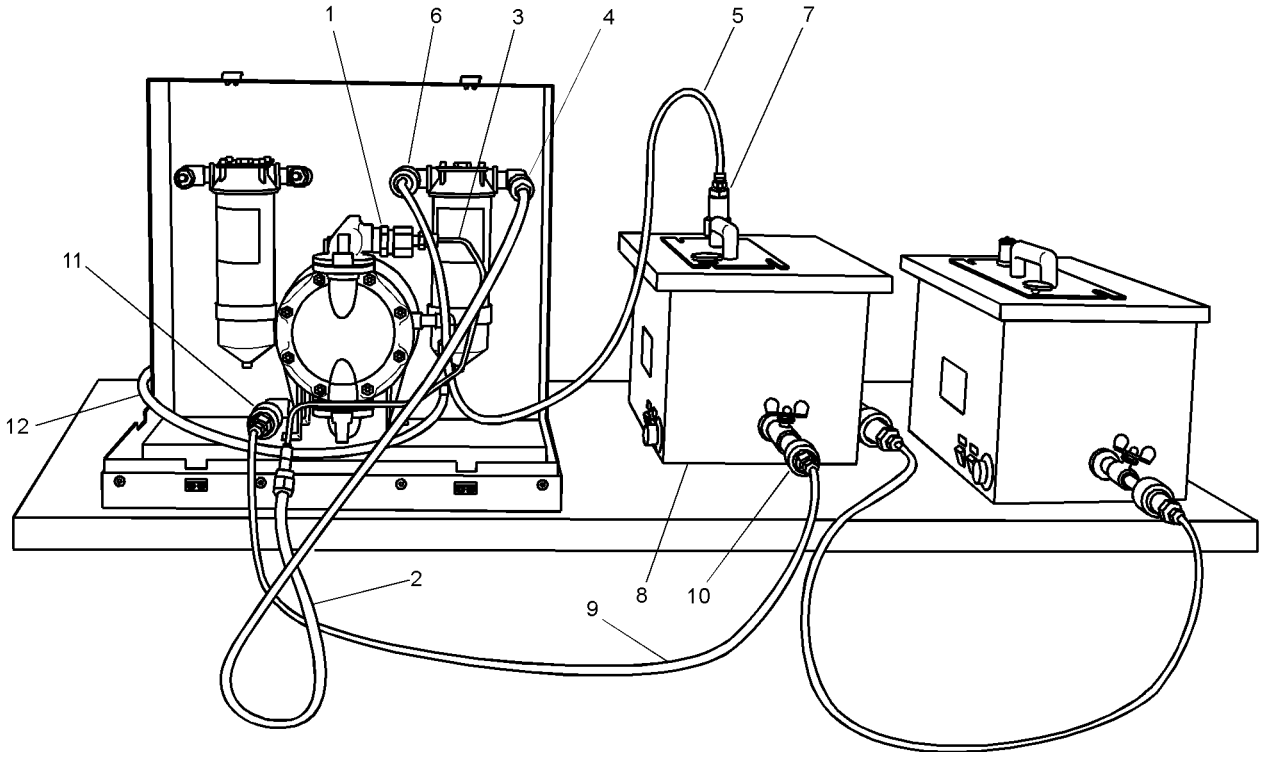

004003

Figure 4-3. Line Flushing Set Interface with Ultrasonic Cleaning Tanks (Line Cleaning)

7. After 8 to 10 cycles, turn regulator knob counterclockwise until no pressure is shown on air pressure gage and pump stops.

8. Disconnect rinse line #1 (13) quick disconnect from quick connect at pump inlet (11). Drain line and store in Set lid.

4-26. FINAL RINSE.

1. Perform pH test as follows:

a. Tear off approximately two inches of number 03 pH paper. Dip half the paper into the distilled water ultrasonic tank. Remove pH paper.

b. Match the color of the wetted sample with the color coded pH scale on the tape container.

c. If pH is between 6.5 and 8.0, the sample is good. Proceed to step two.

d. If pH exceeds 8.0, the distilled water ultrasonic tank has been contaminated with Navy Oxygen Cleaner. Re-clean ultrasonic tank in accordance with paragraph 4-12, steps 2 and 3.

NOTE

Index numbers for steps 2 and 2A refer to figure 4-4 unless otherwise indicated.

2. Disconnect rinse line #1 (13) from pump inlet quick connect (11). Drain line and store in Set lid.

2A. Remove end of return line (2) from Old NOC/Water container (15) and connect to filter inlet quick connect (16, figure 4-5).

NOTE

Index numbers for steps 3 thru 19 refer to figure 4-5.

3. Remove from Set lid hose assembly with two quick disconnects (17) and mark “Final Rinse #1”.

4. Connect one quick disconnect of hose assembly (17) to outlet of quick connect (18) of water filter and connect the other quick disconnect of hose assembly (17) to the quick connect (19) on modified lid of water tank (20).

5. Remove from Set lid one hose assembly with two quick disconnects (21) and mark “Final Rinse #2”.

6. Connect one end of hose assembly (21) to quick connect (11) of the inlet pump.

7. Connect other quick disconnect of hose assembly (21) to quick connect (22) on outlet of distilled water tank.

8. Turn ON/OFF valve of distilled water tank to the OPEN position.

NOTE

As pump is running, check to insure water is not below dotted line. If water is below line, add distilled water to tank to correct level.

9. Turn regulator knob clockwise slowly until pressure gage reads 80 psi and allow to circulate for 30 minutes.

10. After 30 minutes, reduce air supply by turning regulator knob counterclockwise until 20 psi is on pressure gage.

11. Turn ON/OFF valve on distilled water tank to OFF and allow pump to cycle for 8 to 10 times.

12. Turn regulator knob counterclockwise until no pressure is on pressure gage and pump stops.

13. Remove hose assembly (21) from outlet (22) of distilled water tank and inlet (11) of pump and place back into lid of Set.

14. Remove hose assembly (17) from outlet (18) of water filter and quick connect (19) of modified distilled water tank lid and place back into lid of Set.

15. Remove return line (2) and attached adapter from end of oxygen line being cleaned (3) and remove from inlet (16) of distilled water filter. Remove adapter from return line (2) and place return line back into lid of Set and adapter in appropriate storage location in Set.

16. Remove cleaned oxygen line from adapter on pump outlet (1).

17. Turn ON/OFF power switch to OFF on Navy Oxygen Cleaner and distilled water tanks.

18. All lines and fittings shall be blown dried and purged using aircraft and liquid oxygen converter purge unit part number 3447AS100-1.

19. Cleaned oxygen lines shall be capped and bagged if possible after any cleaning process. The oxygen line shall remain bagged and capped until placed in service.

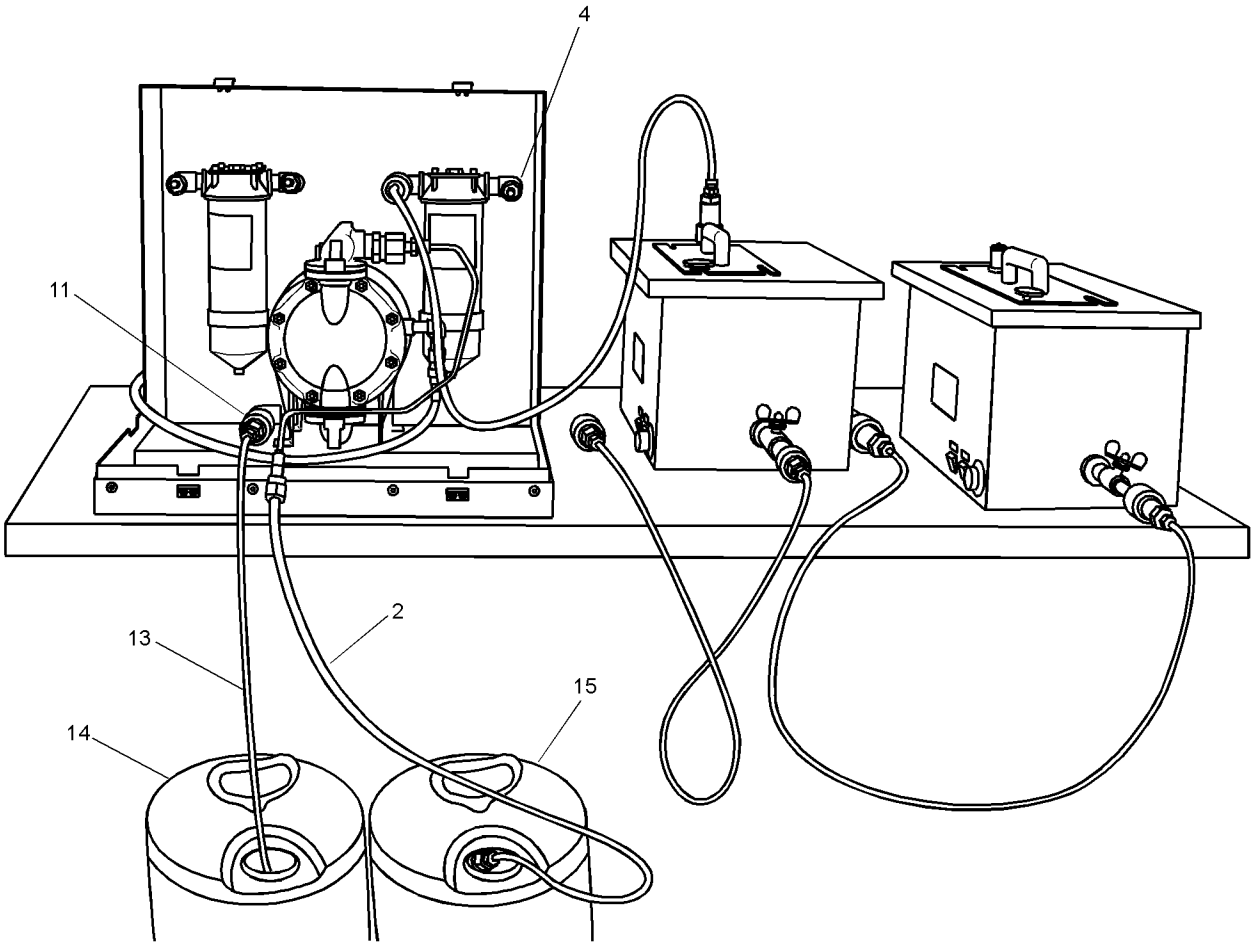

004004

Figure 4-4. Line Flushing Set Interface with Ultrasonic Cleaning Tanks (First Rinse)

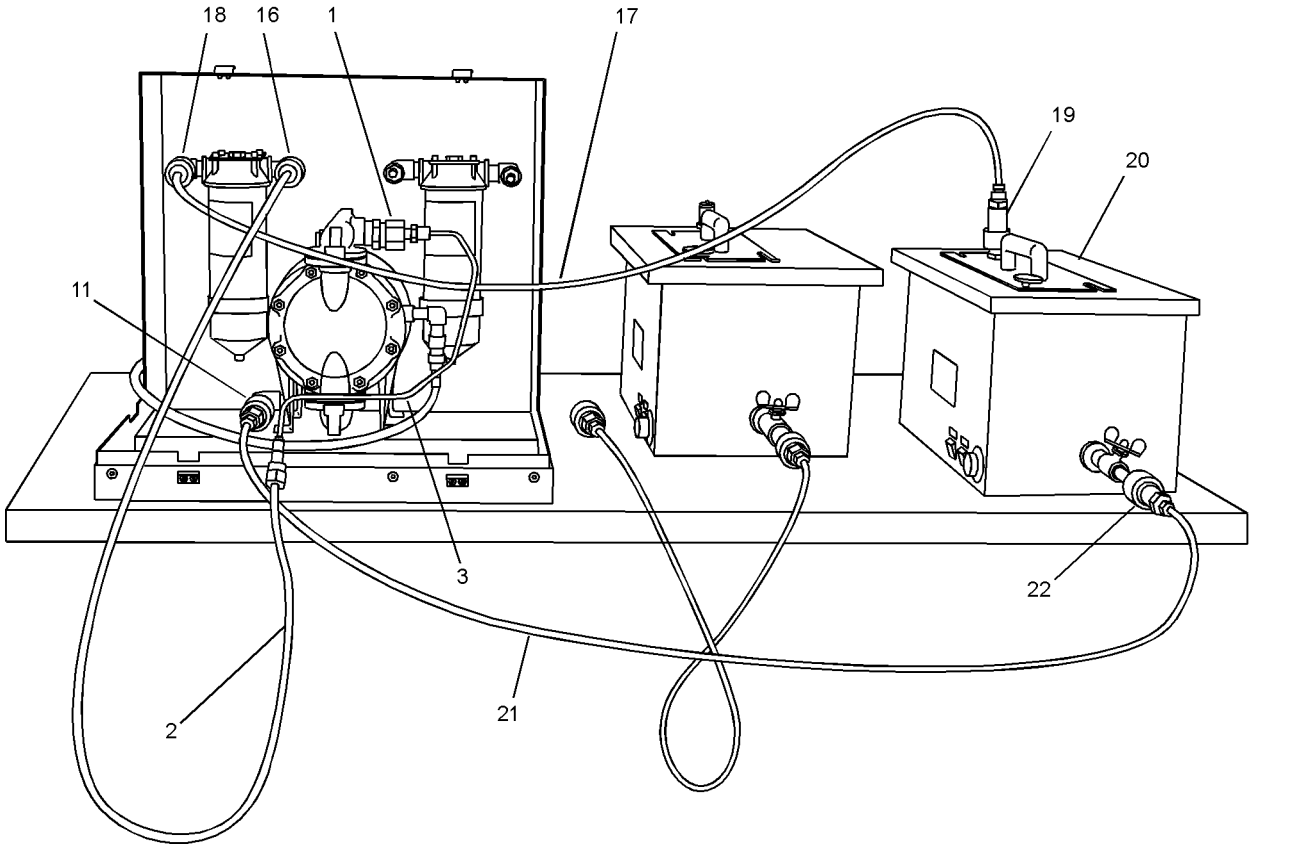

Figure 4-5. Line Flushing Set Interface with Ultrasonic Cleaning Tanks (Final Rinse)

Section 4-7. Illustrated Parts Breakdown

4-27. GENERAL.

4-28. This section lists and illustrates the procurable parts of the Oxygen Line Flushing Set, 3719AS100-1.

4-29. The Illustrated Parts Breakdown should be used during maintenance when requisitioning and identifying parts.

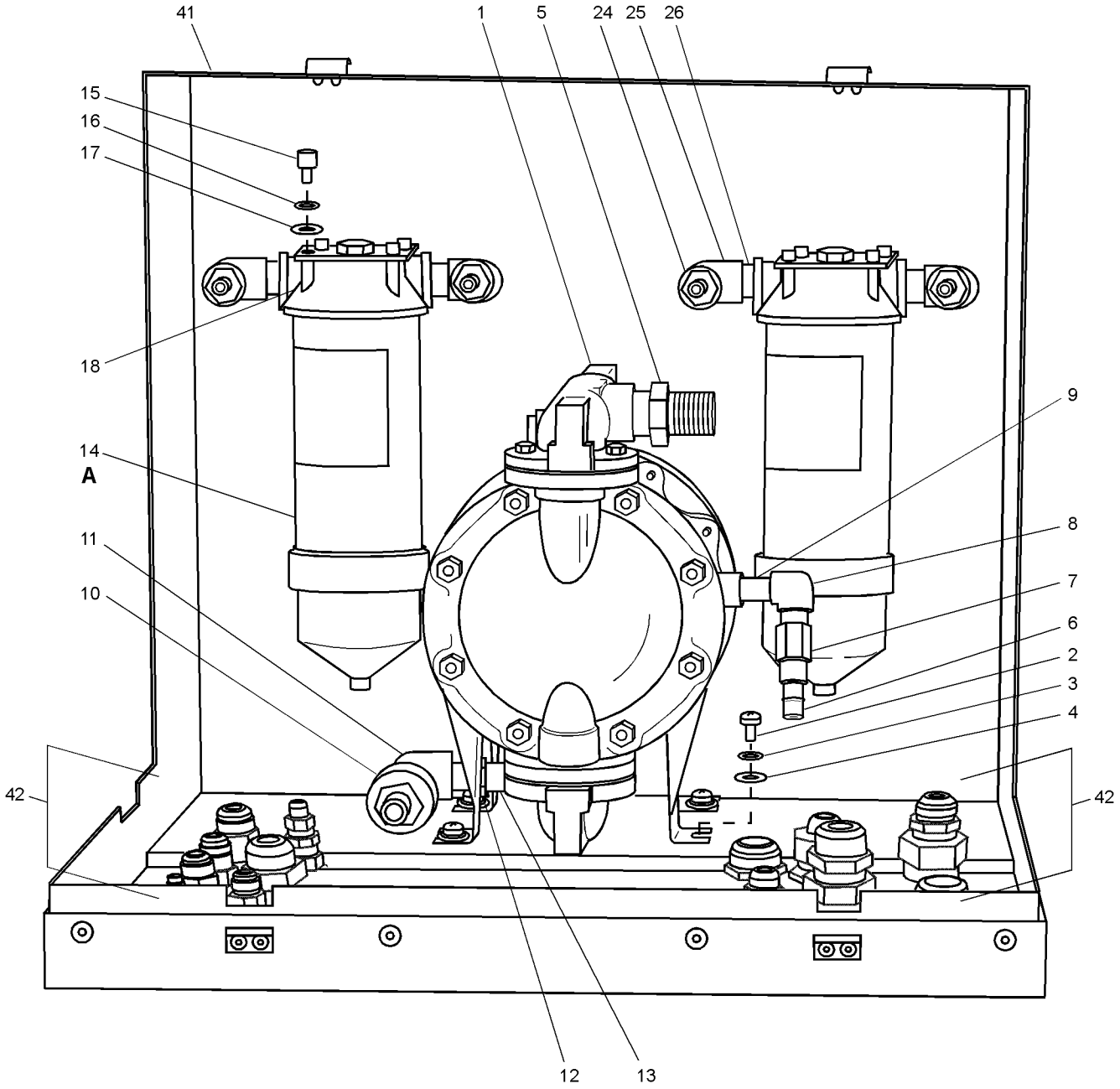

00400601

Figure 4-6. Oxygen Line Flushing Set (Sheet 1 of 3)

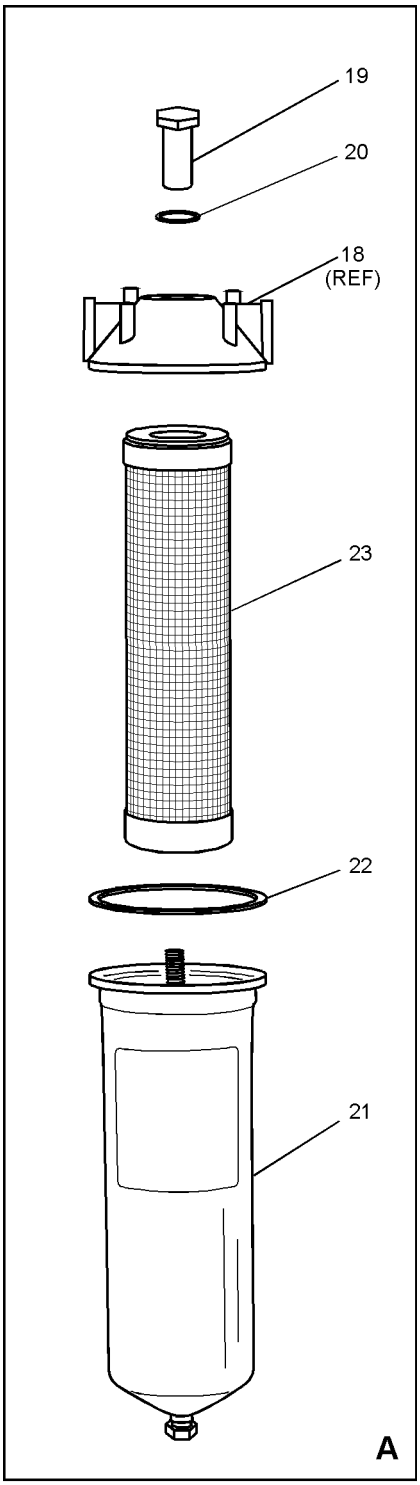

00400602

Figure 4-6. Oxygen Line Flushing Set (Sheet 2)

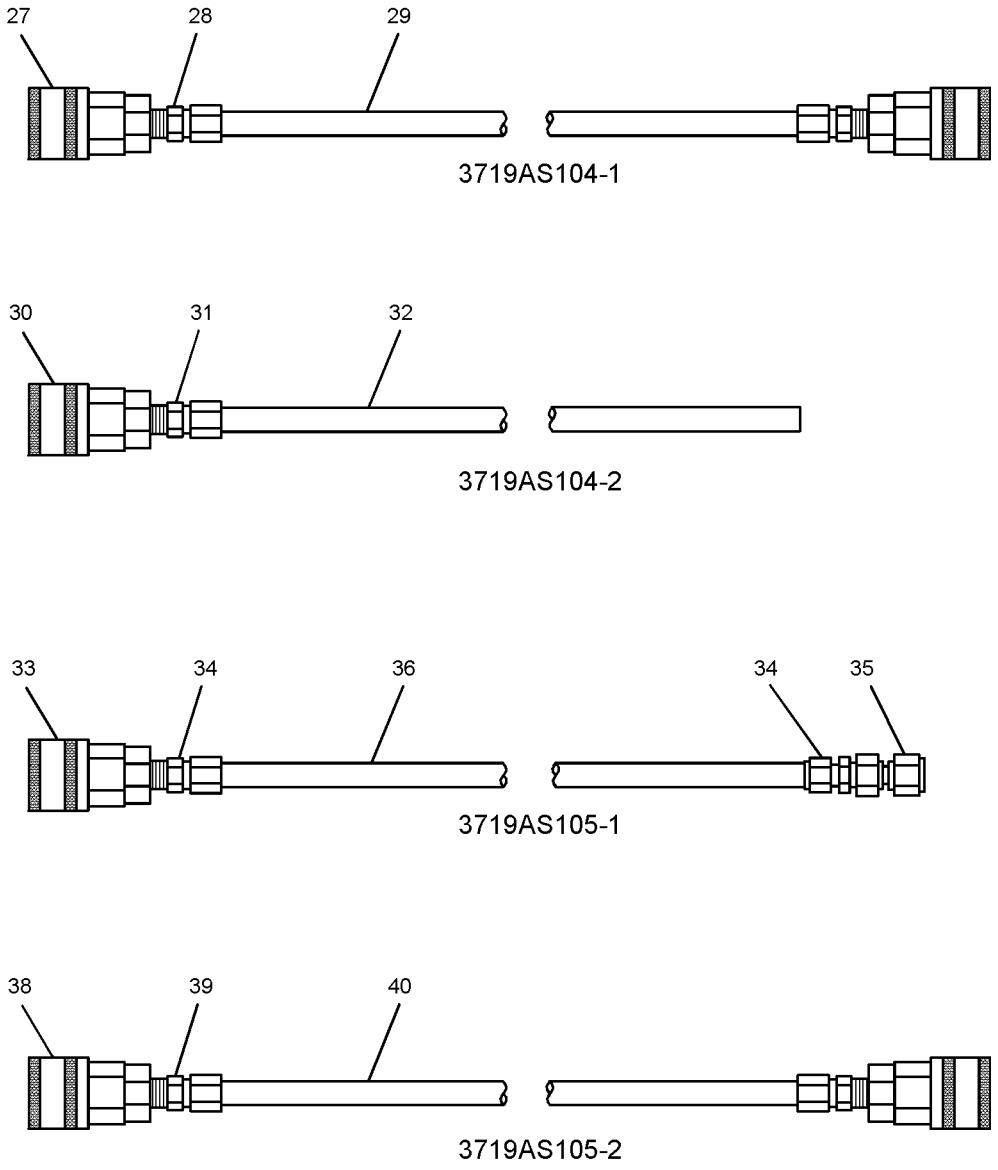

00400603

Figure 4-6. Oxygen Line Flushing Set (Sheet 3)

Figure and Index Number	Part Number	Description 1 2 3 4 5 6 7	Units Per Assembly	Usable On Code
4-6	3719AS100-1	OXYGEN LINE FLUSHING SET	REF	
-1	3719AS107-1	. PUMP ASSEMBLY, 666111-244-C (03990) . . . . (ATTACHING PARTS)	1	
-2	NASM35308-307	. SCREW, Cap	4	
-3	MS35338-139	. LOCKWASHER	4	
-4	NASM15795-851	. FLAT WASHER . . . . . ---*---	4	
-5	16FTX-S	. CONNECTOR, Male (30780)	1	
-6	6534K43	. QUICK DISCONNECT (39428)	1	
-7	SS-8-RA-4	. ADAPTER, Reducing (74717)	1	
-8	SS-4-E	. ELBOW (74717)	1	
-9	SS-4HLN-4.00	. NIPPLE, Hex Long (74717)	1	
-10	SVHN-8-8M	. QUICK DISCONNECT (78357)	1	
-11	SS-8-E	. ELBOW (74717)	1	
-12	SS-8-HNL-2.00	. NIPPLE, Hex Long (74717)	1	
-13	SS-16-RB-8	. BUSHING, Reducing (74717)	1	
-14	3719AS106-1	. FILTER ASSEMBLY, BSSB10-3/4 SD . . . . . (13800) (ATTACHING PARTS)	2	
-15	NASM35307-303	. SCREW, Cap	4	
-16	MS35338-139	. LOCKWASHER	4	
-17	NASM15795-851	. FLAT WASHER . . . . . ---*---	4	
-18	—	. . FILTER HEAD (13800)	1	
-19	4090-5202	. . ASSEMBLY, COVER NUT (13800)	1	
-20	6780-5005	. . WASHER (13800)	1	
-21	3719AS102-1	. . HOUSING, Filter (13800)	1	
-22	4150-5178	. . COVER O-RING BUNA-N, (13800)	1	
-23	PMG-030-10-F-A-D0	. FILTER ELEMENT (13800)	1	
-24	SVHN-8-8M	. QUICK DISCONNECT (78357)	4	
-25	SS-8-SE	. ELBOW, Street (74717)	4	
-26	SS-12-RB-8	. BUSHING, Reducing (74717)	4	
	3719AS104-1	. HOSE ASSEMBLY, Rinse Line	2	
-27	SVHC8-8F	. . COUPLING, Quick Release (78357)	2	
-28	SS-810-1-8	. . CONNECTOR, Male (74717)	2	
-29	5033K35	. . PTFE TUBING, 0.50 x 6 feet (39428)	1	
	3719AS104-2	. HOSE ASSEMBLY, Rinse Line	1	
-30	SVHC8-8F	. . COUPLING, Quick Release (78357)	1	
-31	SS-810-1-8	. . CONNECTOR, Male (74717)	1	
-32	5033K35	. . PTFE TUBING, 0.50 x 6 feet (39428)	1	
	3719AS105-1	. HOSE ASSEMBLY, Return Line	1	
-33	SVHC8-8F	. . COUPLING, Quick Release (78357)	1	

Figure and Index Number	Part Number	Description 1 2 3 4 5 6 7	Units Per Assembly	Usable On Code
4-6-34	SS-810-1-8	. . CONNECTOR, Male (74717)	1	
-35	SS-810-A-8ANF	. . ADAPTER, AN (74717)	1	
-36	SS-810-6	. . TUBE UNION (74717)	1	
-37	5033K35	. . PTFE TUBING, 0.50 x 10 feet (39428)	1	
	3719AS105-2	. HOSE ASSEMBLY, NOC	2	
-38	SVHC8-8F	. . COUPLING, Quick Release (78357)	2	
-39	SS-810-1-8	. . CONNECTOR, Male (74717)	2	
-40	5033K35	. . PTFE TUBING, 0.50 x 6 feet, (39428)	1	
-41	3719AS108-1	. BOX ASSEMBLY	1	
-42	6XHX7-SS	ADAPTER, Tube (30780)	1	
	SPHN8-8M	COUPLING, Quick Disconnect (78357)	1	
	16-12-XHX6-SS	EXPANDER, 3/4″ Internal to 1″ External . . . . . (30780)	1	
	16-10-TRBTX-SS	REDUCER, Tube End (30780)	1	
	16-12-TRBTX-SS	REDUCER, Tube End (30780)	1	
	16-4-TRBTX-SS	REDUCER, Tube End (30780)	1	
	16-5-TRBTX-SS	REDUCER, Tube End (30780)	1	
	16-6-TRBTX-SS	REDUCER, Tube End (30780)	1	
	16-8-TRBTX-SS	REDUCER, Tube End (30780)	1	
	8-HTX-SS	UNION (30780)	2	
	10-8-HTX-SS	UNION, Reducing (30780)	1	
	12-8-HTX-SS	UNION, Reducing (30780)	1	
	8-4-HTX-SS	UNION, Reducing (30780)	1	
	8-5-HTX-SS	UNION, Reducing (30780)	1	
	8-6-HTX-SS	UNION, Reducing (30780)	1	

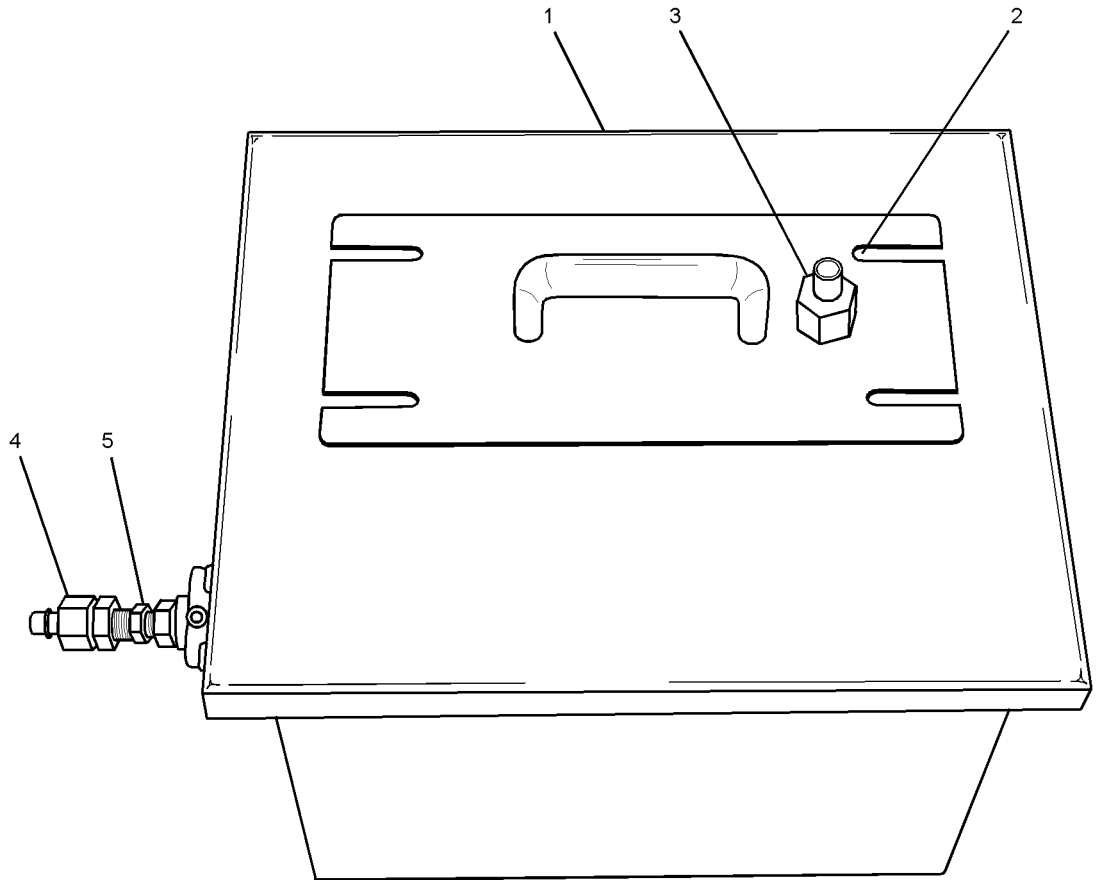

004007

Figure 4-7. NOC Tank and Lid

Figure and Index Number	Part Number	Description 1 2 3 4 5 6 7	Units Per Assembly	Usable On Code
4-7		NOC TANK ASSEMBLY	REF	
-1	HT-1206-NOC	. ULTRASONIC CLEANING TANK, ... 1.9 GALLON, HEATED (22723)	1	
-2	94805A233	. HEX NUT (NOT SHOWN) (39428)	1	
-3	SVHN8-8EB	. COUPLING, QUICK DISCONNECT . . . . . (78357)	1	
-4	SVHN8-8F	. COUPLING, QUICK DISCONNECT . . . . . (78357)	1	
-5	SS-8-HN	. NIPPLE PIPE, COUPLING (02570)	1	

NUMERICAL INDEX

Part Number	Figure and Index Number	SM&R Code
-	4-6-18	PAGZZ
-	4-7	PAGZZ
HT-1206-NOC	4-7-1	PAGZZ
MS35338-139	4-6-3	PAGZZ
	4-6-16	PAGZZ
NASM15795-851	4-6-4	PAGZZ
	4-6-17	PAGZZ
NASM35307-303	4-6-15	PAGZZ
NASM35308-307	4-6-2	PAGZZ
PMG-030-10-F-A-D0	4-6-23	PAGZZ
SPHN8-8M	4-6	PAGZZ
SS-12-RB-8	4-6-26	PAGZZ
SS-16-RB-8	4-6-13	PAGZZ
SS-4-E	4-6-8	PAGZZ
SS-4HLN-4.00	4-6-9	PAGZZ
SS-810-1-8	4-6-28	PAGZZ
	4-6-31	PAGZZ
	4-6-34	PAGZZ
	4-6-39	PAGZZ
SS-810-6	4-6-36	PAGZZ
SS-810-A-8ANF	4-6-35	PAGZZ
SS-8-E	4-6-11	PAGZZ
SS-8-HN	4-7-5	PAGZZ
SS-8-HNL-2.00	4-6-12	PAGZZ
SS-8-RA-4	4-6-7	PAGZZ
SS-8-SE	4-6-25	PAGZZ
SVHC8-8F	4-6-27	PAGZZ
	4-6-30	PAGZZ
	4-6-33	PAGZZ
	4-6-38	PAGZZ
SVHN8-8EB	4-7-3	PAGZZ
SVHN8-8F	4-7-4	PAGZZ
SVHN-8-8M	4-6-10	PAGZZ
	4-6-24	PAGZZ

Part Number	Figure and Index Number	SM&R Code
10-8-HTX-SS	4-6	PAGZZ
12-8-HTX-SS	4-6	PAGZZ
16-10-TRBTX-SS	4-6	PAGZZ
16-12-TRBTX-SS	4-6	PAGZZ
16-12-XHX6-SS	4-6	PAGZZ
16-4-TRBTX-SS	4-6	PAGZZ
16-5-TRBTX-SS	4-6	PAGZZ
16-6-TRBTX-SS	4-6	PAGZZ
16-8-TRBTX-SS	4-6	PAGZZ
16FTX-S	4-6-5	PAGZZ
3719AS100-1	4-6	PAGGG
3719AS102-1	4-6-21	PAGZZ
3719AS104-1	4-6	PAGGG
3719AS104-2	4-6	PAGGG
3719AS105-1	4-6	PAGGG
3719AS105-2	4-6	PAGGG
3719AS106-1	4-6-14	PAGGG
3719AS107-1	4-6-1	PAGGG
3719AS108-1	4-6-41	PAGZZ
4090-5202	4-6-19	PAGZZ
4150-5178	4-6-22	PAGZZ
5033K35	4-6-29	PAGZZ
	4-6-32	PAGZZ
	4-6-37	PAGZZ
	4-6-40	PAGZZ
6534K43	4-6-6	PAGZZ
6780-5005	4-6-20	PAGZZ
6XHX7-SS	4-6-42	PAGZZ
8-4-HTX-SS	4-6	PAGZZ
8-5-HTX-SS	4-6	PAGZZ
8-6-HTX-SS	4-6	PAGZZ
8-HTX-SS	4-6	PAGZZ
94805A233	4-7-2	PAGZZ

THIS PAGE INTENTIONALLY LEFT BLANK.