CHAPTER 3

SKK-9 LIFERAFT AND SURVIVAL KIT CONTAINER ASSEMBLY

Section 3-1. Description

3-1. GENERAL.

3-2. The SKK-9 liferaft and survival kit container is designed for use with certain E-2C aircraft as part of the A/P22P-11 crew backpack assembly (figures 3-1 and 3-2). The A/P22P-11 crew backpack assembly functions as a back rest for the aircrewman, a container for a parachute assembly, a container for an emergency oxygen system, and a container for a liferaft and survival items. The SKK-9 container, P/N 123AB50519-3, is manufactured by Grumman/CAGE 16512.

NOTE

This chapter contains maintenance, inspection and repair procedures for the SKK-9 container only. Also included are container rigging and packing instructions, including folding and packing the LRU-18/U liferaft into the container. Refer to NAVAIR 13-1-6.2 for parachute information and to NAVAIR 13-1-6.4-1 for the E-2C Emergency Oxygen System. Refer to NAVAIR 13-1-6.1-1 for description, maintenance, inspection and test procedures for the LRU-18/U liferaft.

3-3. CONFIGURATION.

3-4. The SKK-9 liferaft and survival kit is made up of a rigid two-piece fiberglass container. The LRU-18/U one-man vee-bottom liferaft is stowed in the SKK-9 on the starboard side along with a survival kit stowed on the port side (figure 3-3).

3-5. SUBASSEMBLIES. The major subassemblies of the SKK-9 are as follows:

1. Container subassembly
2. LRU-18/U liferaft
3. Survival kit

3-6. REFERENCE NUMBERS, ITEMS AND SUPPLY DATA.

3-7. Figures 3-7 through 3-8 contain information on each assembly, subassembly and component part of the SKK-9. The figure and index number reference or part number, description, and units per assembly are provided.

3-8. APPLICATION.

3-9. The SKK-9 container is part of the survival equipment included with the A/P22P-11 crew backpack assembly which is used by aircrewmen aboard certain E-2C aircraft.

3-10. FUNCTION.

3-11. The SKK-9 is not designed to be used independently of the A/P22P-11 crew backpack assembly. Refer to NAVAIR 13-1-6.2 for function of the entire system.

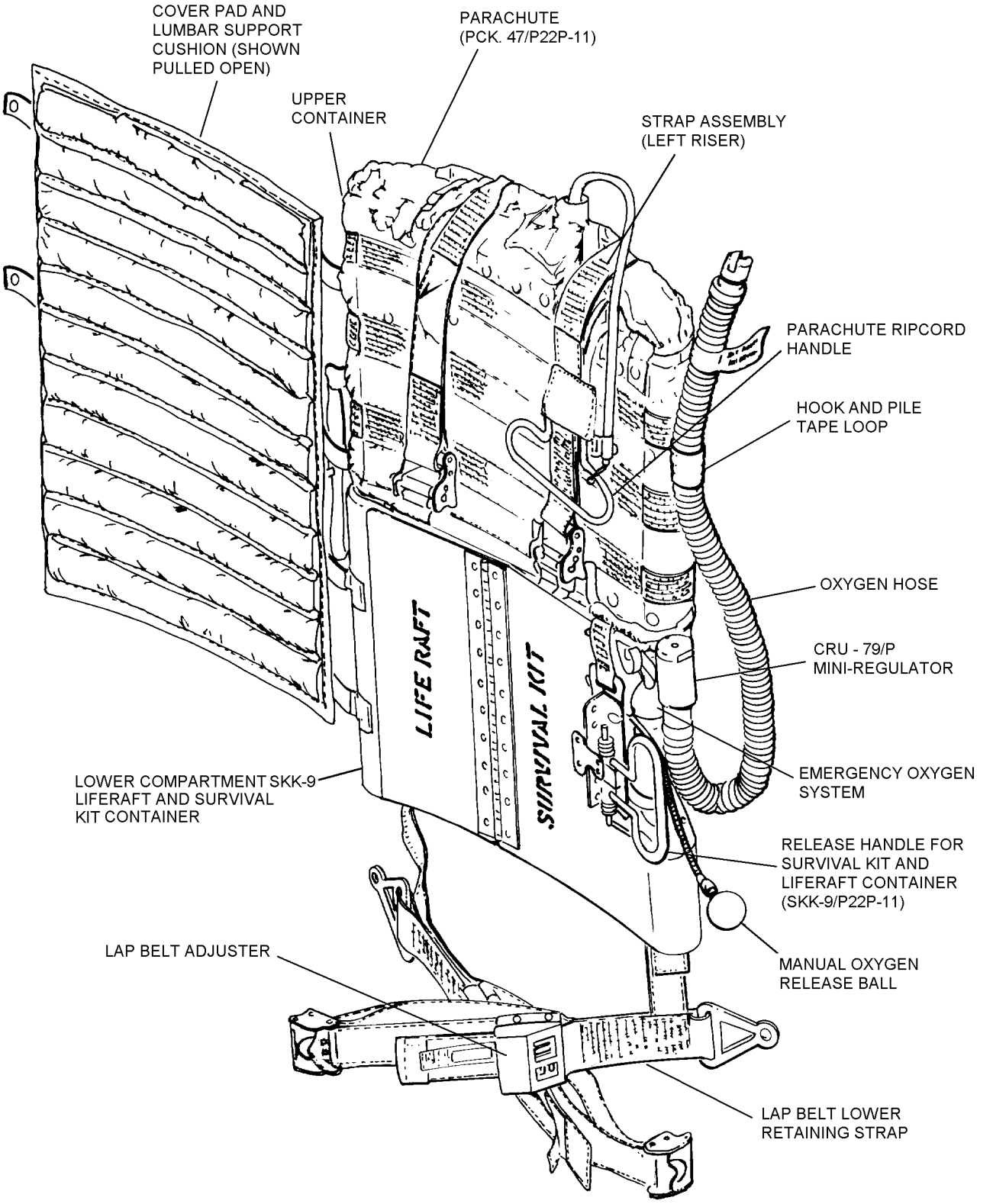

Figure 3-1. A/P22P-11 Crew Backpack Assembly

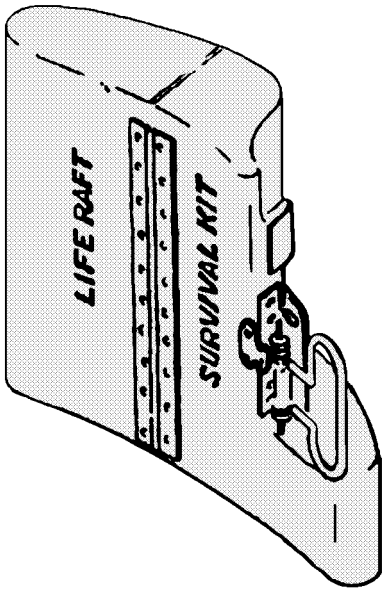

63-56

Figure 3-2. SKK-9 Liferaft and Survival Kit Container Assembly

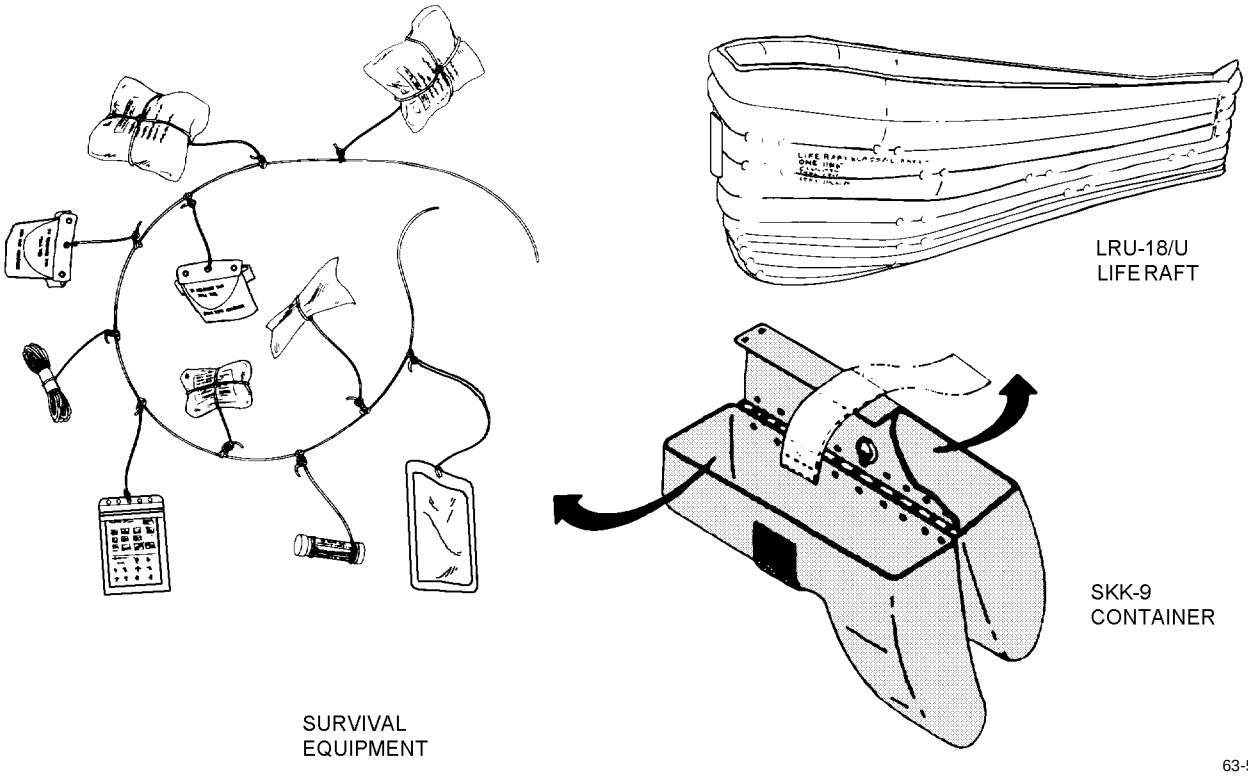

63-57

Figure 3-3. SKK-9 Subassemblies

Section 3-2. Modifications

3-12. GENERAL.

3-13. There are no modifications to the SKK-9 required/authorized at this time.

Section 3-3. Rigging and Packing

3-14. GENERAL.

3-15. Unless operational requirements demand otherwise, rigging and packing of the SKK-9 liferaft and survival kit container shall be accomplished at Intermediate Levels of maintenance by qualified personnel.

NOTE

Quality assurance steps are provided for critical operations when a step is underlined, the Aircrew Survival Equipmentman shall perform the operation and then have performance verified by Quality Assurance (QA).

3-16. RIGGING AND PACKING PROCEDURES.

3-17. Rigging and packing of the SKK-9 liferaft and survival kit container is described in the following paragraphs:

1. Preliminary Procedures
2. Survival Equipment Binding
3. Liferaft, Folding, Rigging, Packing and Closure
4. Survival Equipment Packing, Rigging and Closure

3-18. PRELIMINARY PROCEDURES. The following preliminary procedures shall be accomplished prior to rigging and packing the SKK-9 liferaft and survival kit container.

1. Ensure that the SKK-9 container is inspected in accordance with Section 3-5.

2. Ensure liferaft has been inspected in accordance with NAVAIR 13-1-6.1-1.

3. Inspect survival items (table 3-1) in accordance with NAVAIR 13-1-6.5.

NOTE

With the exception of batteries, items reaching overage while packed in survival kits and rafts shall remain in service until the next inspection cycle of the completed assembly.

3-19. SURVIVAL EQUIPMENT BINDING. To bind survival items, proceed as follows (table 3-1).

NOTE

To prevent loss of survival items, tie items individually and then tie to 120-inch length of nylon cord (Type I). Nylon cord of prescribed lengths required for this procedure shall be seared at both ends to prevent fraying (table 3-2).

Table 3-1. Survival Kit Equipment (Note 1)

Item Name	Quantity	Reference Number
Nylon Cord, Type I	50 ft	NAVAIR 13-1-6.5
Day/Night Distress Signal, MK-13 MOD 0 or MK-124 MOD 0	1	NAVAIR 13-1-6.5
Sea Dye Marker	2	NAVAIR 13-1-6.5
Bailing Sponge, Type II, Class 2	1	NAVAIR 13-1-6.5
SRU-31/P Packet #1	1	NAVAIR 13-1-6.5
SRU-31/P Packet #2	1	NAVAIR 13-1-6.5
SRU-31A/P (Note 3)	Optional	NAVAIR 13-1-6.5
Bagged Water, Drinking	3	NAVAIR 13-1-6.5
Envelope, Packing List	1	NAVAIR 13-1-6.5
Ground/Air Emergency Code Card	1	NAVAIR 13-1-6.5
Combat Casualty Blanket (Note 2)	1	NAVAIR 13-1-6.5

Notes:

1. The items listed are typical and are considered mandatory for inclusion in the survival kit container. Deviation from the listed items may be required by certain Functional Air Wings (FUNCWINGS), Carrier Air Wings (CVW), COMFAIRS, or Marine Air Wings (MAW). Requests for deviations must be forwarded to and authorized by TYCOMS and with information to Fleet Support Team (FST) at NAVAIR-WARCENACDIV Patuxent River MD via Naval Message. When optional items are substituted, particular attention must be paid to the binding sequence so that physical sizes and binding order of substituted items remain approximately the same. That portion of an item name in parentheses is a common-use name or container size and is not intended for supply requisition purposes.
2. Optional Equipment.
3. The selection of SRU-31/P or SRU-31A/P Individual Aircrewmember's Survival Kit will be at the discretion of the TYPE COMMANDER depending on mission requirements, reference NAVAIR 13-1-6.5, Chapter 9, for detailed information.

Table 3-2. Nylon Cord Lengths Required for Binding

Length (Inches)	No. Required
120	1
12	5 (Note 1)
30	2
36	1
40	3 (Note 1)

Notes:

1. The number of lengths of nylon cord may change depending on what size water bags are used. Only authorized water bags are to be used in accordance with table 3-1 and NAVAIR 13-1-6.1-1 technical manual.

1. Using a 36-inch piece of nylon cord, tie an overhand knot in each end. Wrap end of cord two turns around one end of a MK 13 MOD 0 signal flare and tie with a surgeon's knot. Turns of cord shall overlap and all knots shall be positioned snugly against each other.

2. Route cord to opposite end of signal flare and tie in the same manner as step one. The cord between ties shall be drawn tightly.

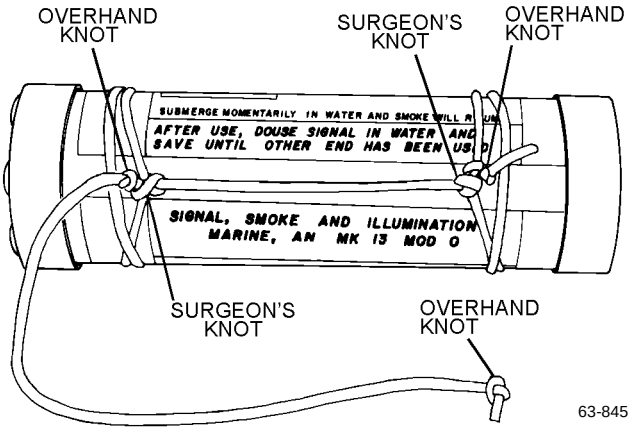

Step 2 - Para 3-19

3. Using a 12-inch piece of nylon cord, tie an overhand knot near each end. Pass overhand knot through center grommet in dye marker and tie a bowline knot, allowing approximately a 1-inch loop. Bowline knot shall lie snugly against overhand knot.

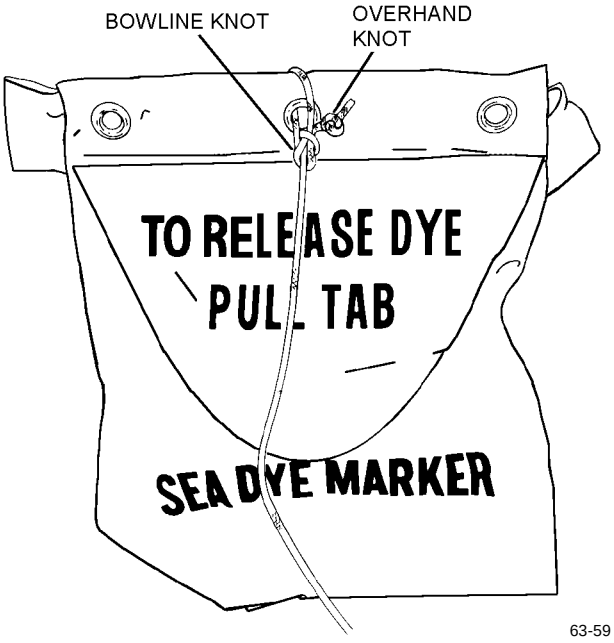

Step 3 - Para 3-19

4. Tie second dye marker in the same manner as step 3.

5. To secure the combat casualty blanket, tie an overhand knot near each end of a 30-inch piece of nylon cord. Wrap cord around blanket until cord ends meet, then rotate cords 1/4 turn and wrap cords around opposite sides of blanket. Tie with a surgeon's knot. Knots shall lie snugly against each other.

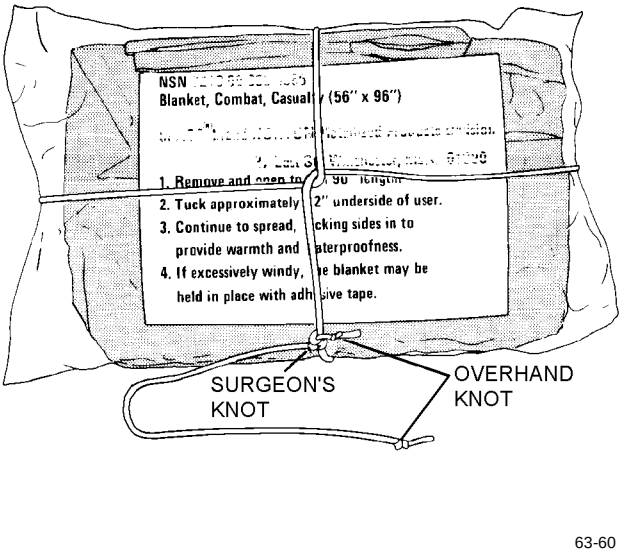

Step 5 - Para 3-19

6. To secure bagged emergency water, place bagged emergency drinking water flat inside a clear vinyl envelope (MIL-B-117) with pour spout folded down. Bagged water must be able to fit into an envelope without disrupting the closure of the sealing slide fastener. Using a 12-inch length of cord, tie an overhand knot on each end and pass knot through center hole in envelope. Secure with bowline knot, allowing an approximate 1-inch loop. Position an overhand knot snugly against the bowline knot.

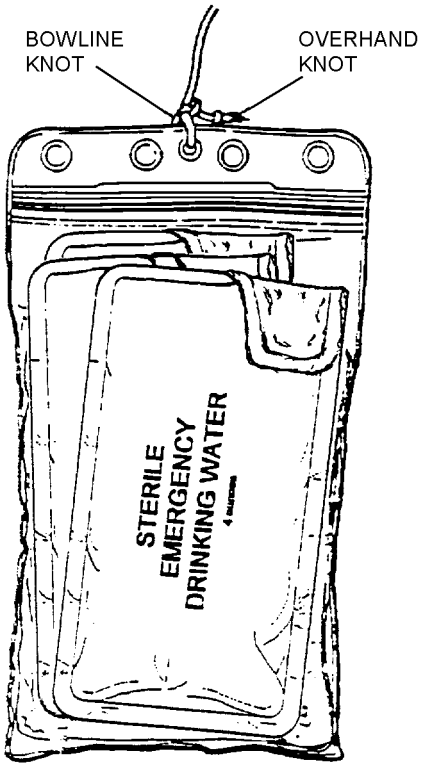

Step 6 - Para 3-19

NOTE

The bailing sponge should be compressed to a minimum thickness while damp and then allowed to dry in the compressed state before tying.

7. Using a 30-inch length of nylon cord, tie an overhand knot near ends. Wrap cord around sponge until cord ends meet, then rotate cords 1/4 turn and wrap cords around opposite sides of sponge. Tie with a surgeon's knot. Knots shall lie snugly against each other.

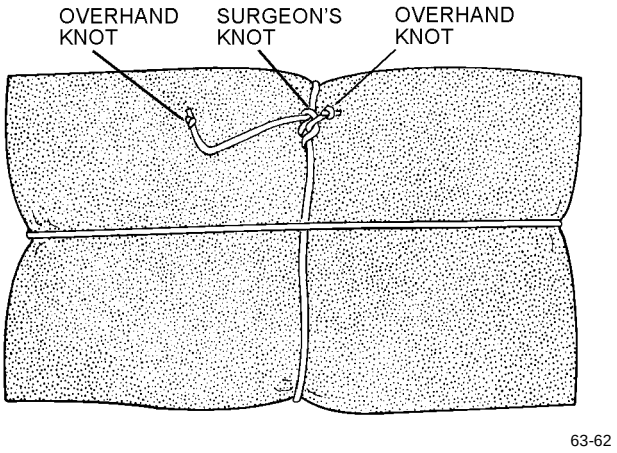

Step 7 - Para 3-19

8. Cut one 2 x 3-inch piece of nylon duck material. Accordion-fold 50-foot length of nylon cord in 6 inch bights, and wrap material around center of folded cord. Using a 12-inch piece of nylon cord, tie an overhand knot near each end and secure one end of cord to center of material with a surgeon's knot. Position all knots snugly against each other.

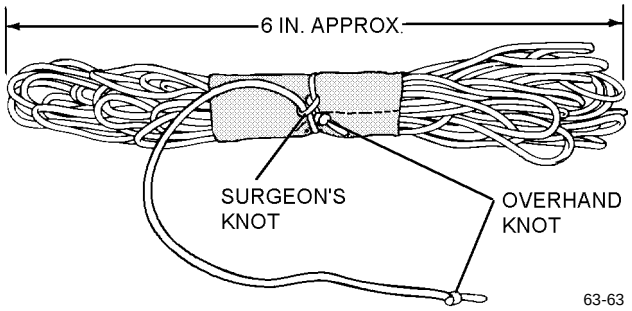

Step 8 - Para 3-19

9. Place ground/air emergency code card into clear vinyl plastic envelope (MIL-B-117) and close sealing zipper. Using a 12-inch length of nylon cord, tie an overhand knot near each end and pass knot through center hole in envelope. Secure with bowline knot, allowing a 1-inch loop. Position overhand knot snugly against bowline knot.

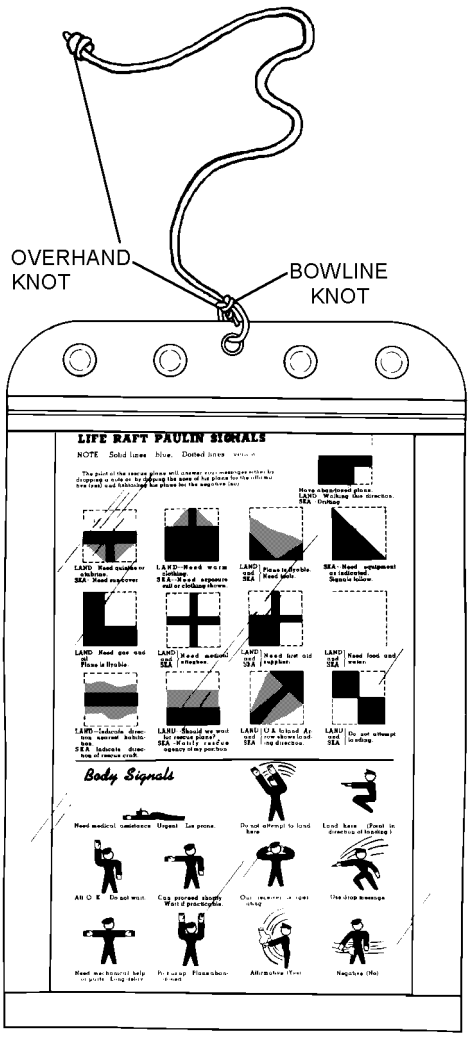

63-64

Step 9 - Para 3-19

10. Using a 40-inch length of nylon cord, tie an overhand knot in both ends. Wrap cord around one packet of SRU-31/P survival kit until cord ends meet, then rotate cords 1/4 turn and wrap cords around opposite sides of packet. Tie with a surgeon's knot. Knots shall be positioned snugly against each other.

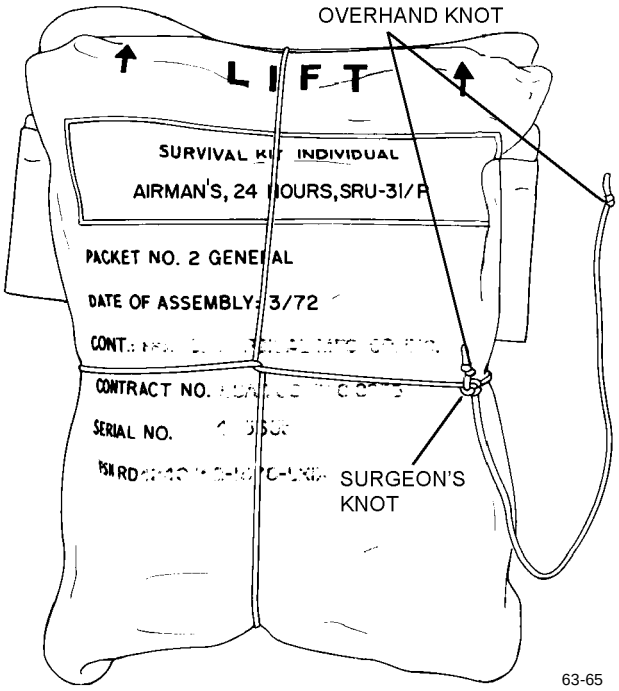

63-65

Step 10 - Para 3-19

11. Secure second SRU-31/P packet in the same manner as step 10.

12. Using a 120-inch piece of nylon cord, form an overhand loop approximately 12 inches from one end. Continue making these loops every 5 inches until enough loops are formed to accommodate all survival items.

13. Ensure that remaining end of cord on each individual survival item has an overhand knot near the end.

14. Tie each item to a loop with a surgeon's knot. All knots shall be positioned snugly against one another (figure 3-4).

3-20. LIFERAFT FOLDING, RIGGING, PACKING AND CLOSURE. To fold, rig, pack and close the LRU-18/U liferaft in the SKK-9 survival kit, proceed as follows:

1. Cross oral inflation tubes (3”) and hold with rubber band. This will enable the tubes to more easily fall into a 3-inch fold when the raft is being inserted into the container, thus minimizing the chance of damage to the tubes.

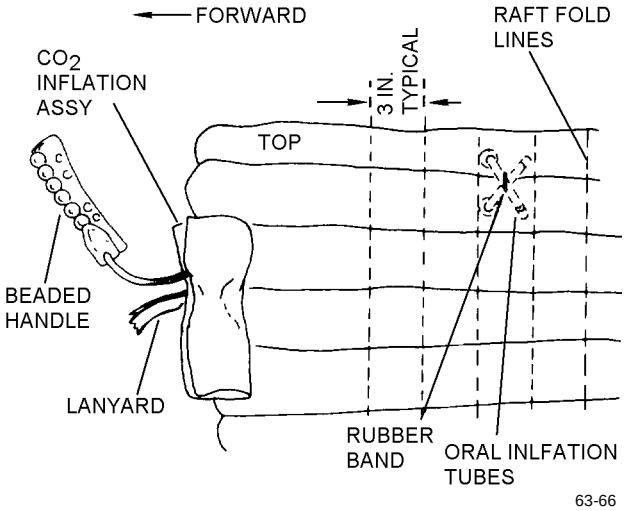

Step 1 - Para 3-20

NOTE

In order to pack the liferaft into the SKK-9 container the raft must be completely evacuated. Use care when deflating. Close the oral inflation valve while the vacuum pump is still running to assure that no air re-enters the raft. Refer to NAVAIR 13-1-6.1-1.

2. Ensure that the CO_2 cylinder is properly installed. Refer to NAVAIR 13-1-6.1-1. Safety tie the inflation valve actuation handle with one turn of size E nylon thread. Use a surgeon’s knot followed by a square knot.

3. Attach lanyard to liferaft as follows. Form a lark’s head knot with the webbing loop large enough to pass over the entire CO_2 inflation assembly. Tighten the knot around the manifold stem. The knot will lie between the surface of the raft and the CO_2 inflation assembly. Tack the knot with two turns of waxed, size 6 cord, single. Tie the ends of the threads with a surgeons knot, followed by a square knot.

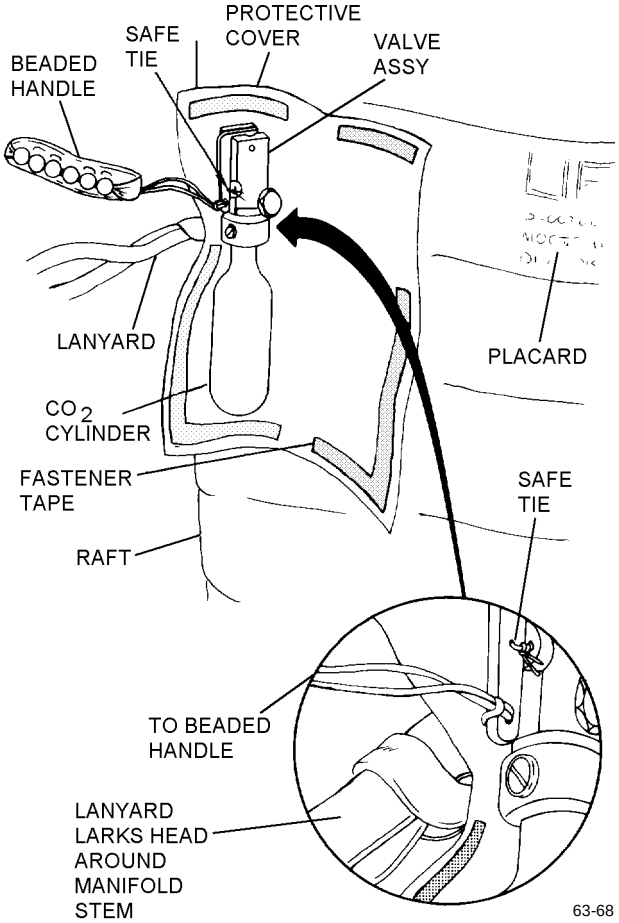

Step 3 - Para 3-20

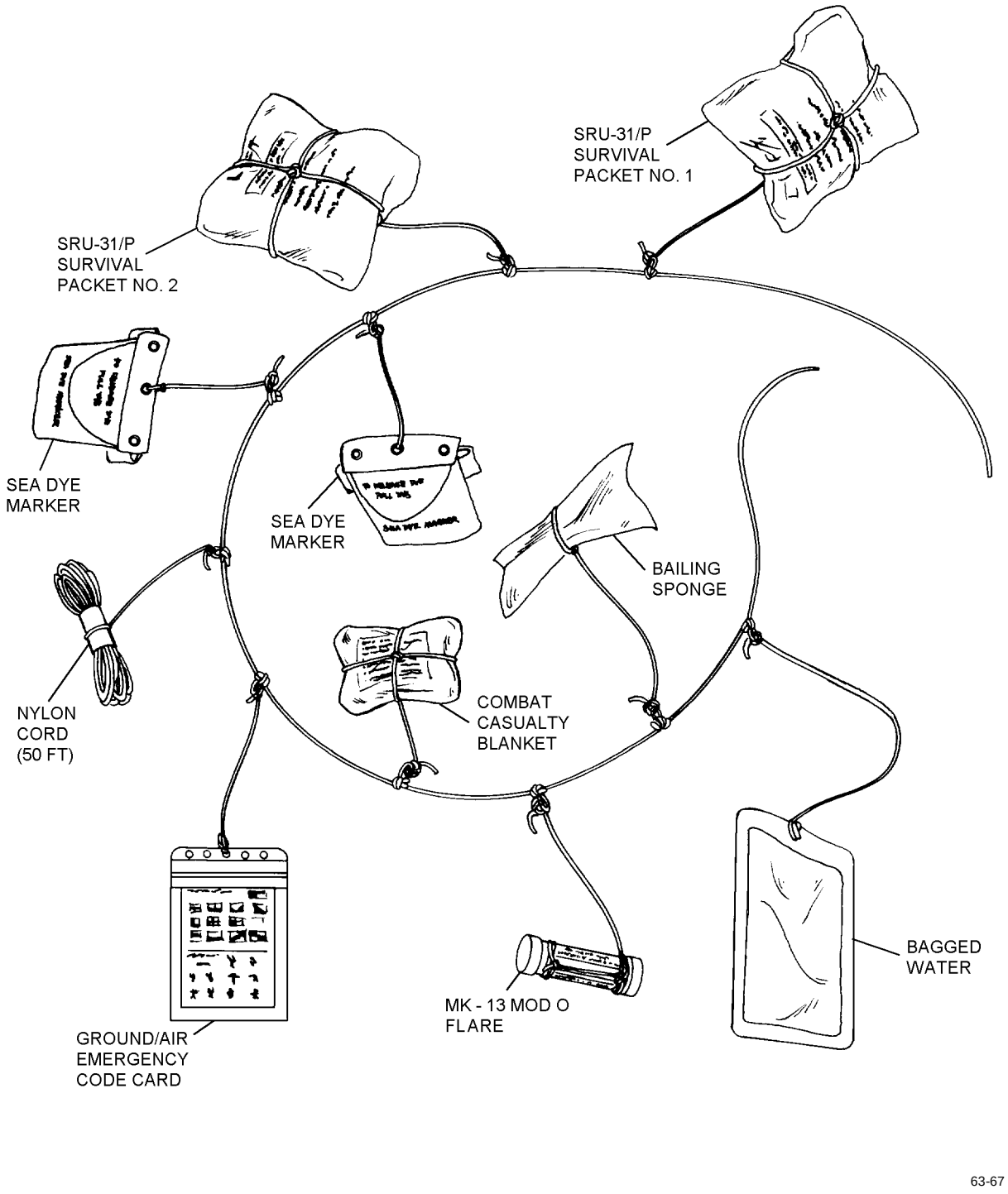

Figure 3-4. Binding Survival Items

4. Lay liferaft on the packing table as shown and lightly dust entire raft with talc (MIL-T-50036A). Note fold line for step 5.

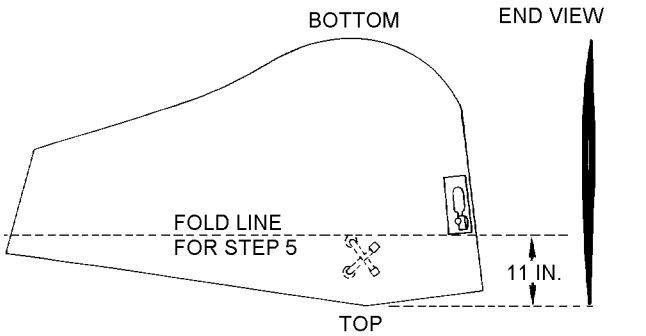

63-69

Step 4 - Para 3-20

5. Fold top of raft up and over at point in line with inflation valve of CO_2 cylinder. Note fold line for step 7.

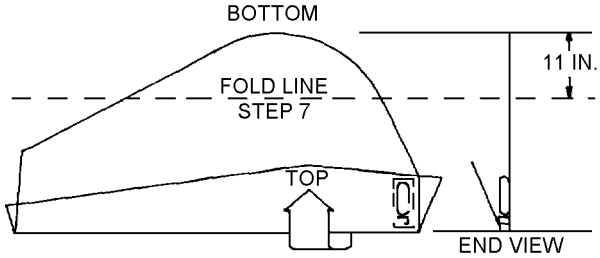

63-70

Step 5 - Para 3-20

6. Turn raft over with top fold under and at top. Bottom of raft should now be nearest person folding raft.

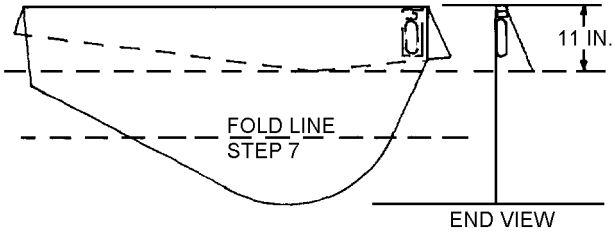

63-71

Step 6 - Para 3-20

7. Fold bottom of raft up at fold line. Note fold line for step 8.

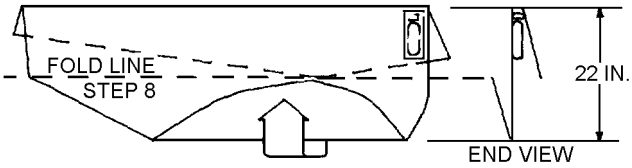

NOTE: FOLDS AT STEP 5 AND 7 ARE ON OPPOSITE SIDES OF FOLDED RAFT.

63-72

Step 7 - Para 3-20

8. Fold top half of folded raft forward and down at fold line eight. The original fold at step 5 should now be on top to provide immediate access to CO_2 cylinder.

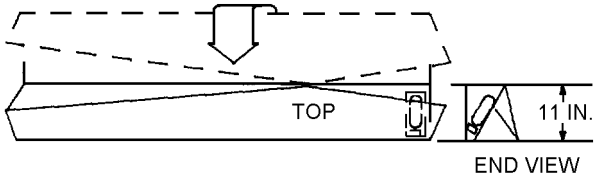

63-73

Step 8 - Para 3-20

9. Place the SKK-9 liferaft and survival equipment container on table with raft compartment open and facing packer. Starting at raft end opposite CO_2 cylinder, accordion-fold liferaft in folds of approximately 3 1/2 inches directly into the container. Continue folding raft into the container working towards the CO_2 cylinder.

NOTE

Liferaft should be packed in raft compartment so that CO_2 cylinder is at the top (opening) and inflation valve faces bottom side of container. (Side with larger "L" survival equipment area).

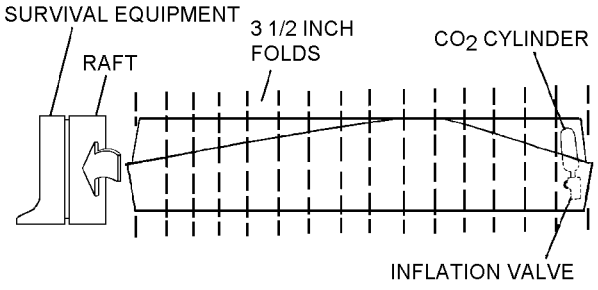

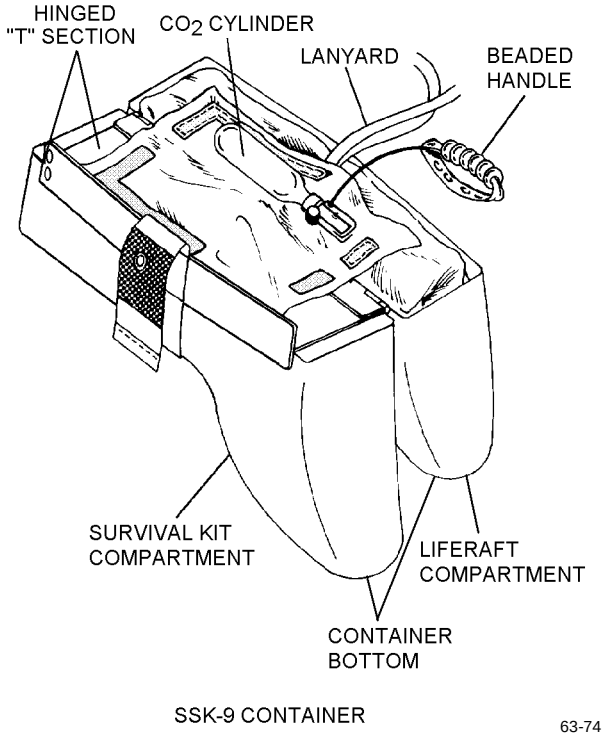

Step 9 - Para 3-20

10. Accordion-fold the webbing as shown. Fold most of the webbing until a short portion is left to hook up to the ring in the equipment container (figure 3-5).

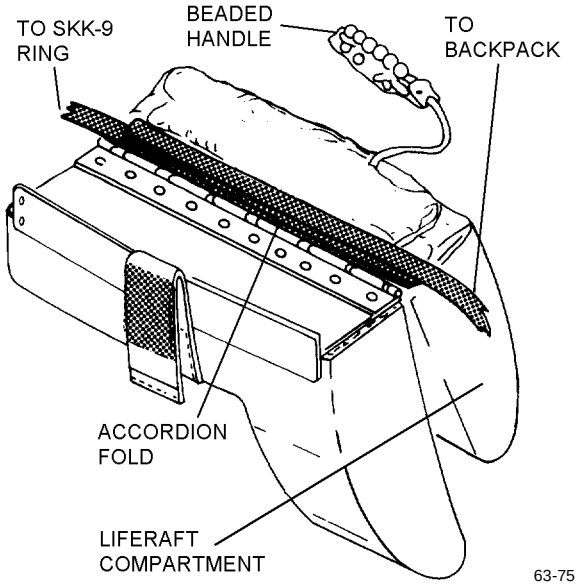

Step 10 - Para 3-20

WARNING

Ensure that lanyard line is not entangled with beaded inflation handle, which may cause interference when being extracted from the container. A rubber band may be used to secure the webbing as desired.

10A. Ensure webbing stop on raft lanyard is butted against the inside of SKK-9 container. There shall be a minimum of 45 inches of lanyard extending from container to end of snaphook, which is stowed in the A/P22P-11 backpack cushion.

11. Install raft cover. Allow lanyards and beaded handle to exit locations shown.

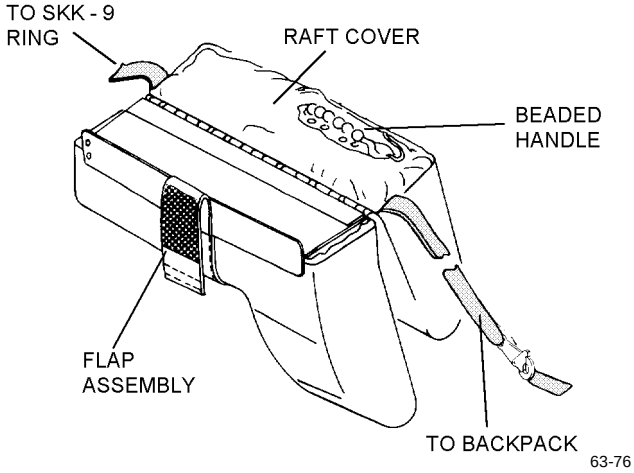

Step 11 - Para 3-20

NOTE

Notch in raft cover to be located at end where bottle manifold and beaded handle are located.

12. Close the hinged “T” section over the raft cover and secure by closing the flap assembly.

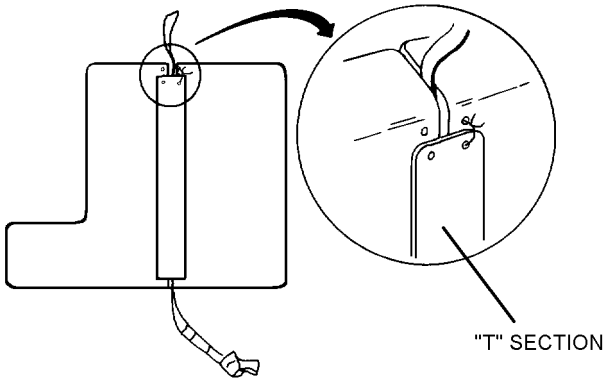

Step 12 - Para 3-20

NOTE

Raft is properly secured when the holes for the safety-tie are aligned.

13. Assure that safety-tie holes at end of “T” section are lined up and safety-tie liferaft compartment with one turn of size E nylon thread. Tie ends with surgeon’s knot followed by a square knot.

3-21. SURVIVAL EQUIPMENT PACKING, RIGGING AND CLOSURE. To pack survival equipment in the fiberglass survival kit proceed as follows:

NOTE

Assure that the liferaft container is properly closed and that hinged “T” section is safetied.

1. Place equipment container on table with survival kit container open and open end facing up.

NOTE

Survival items shall be stowed in a neat and orderly fashion and the items shall be arranged to prevent a distorted pack.

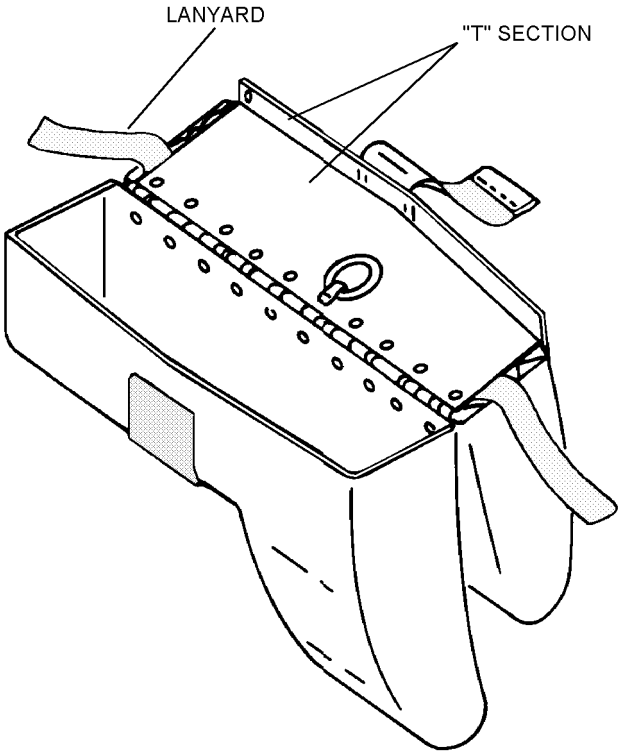

Step 1 - Para 3-21

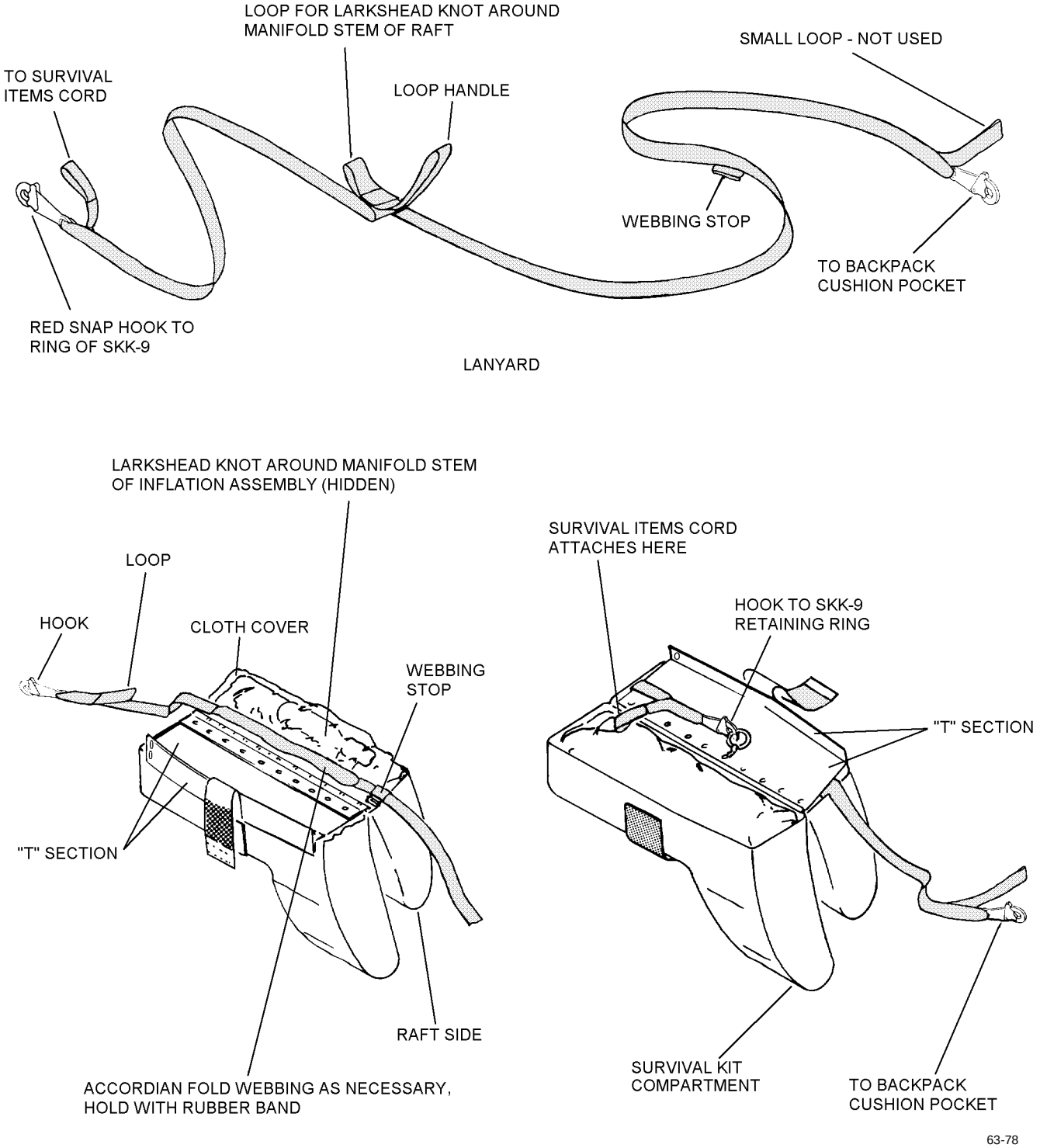

Figure 3-5. Lanyard Rigging

2. Stow survival items into the Survival Kit section of container.

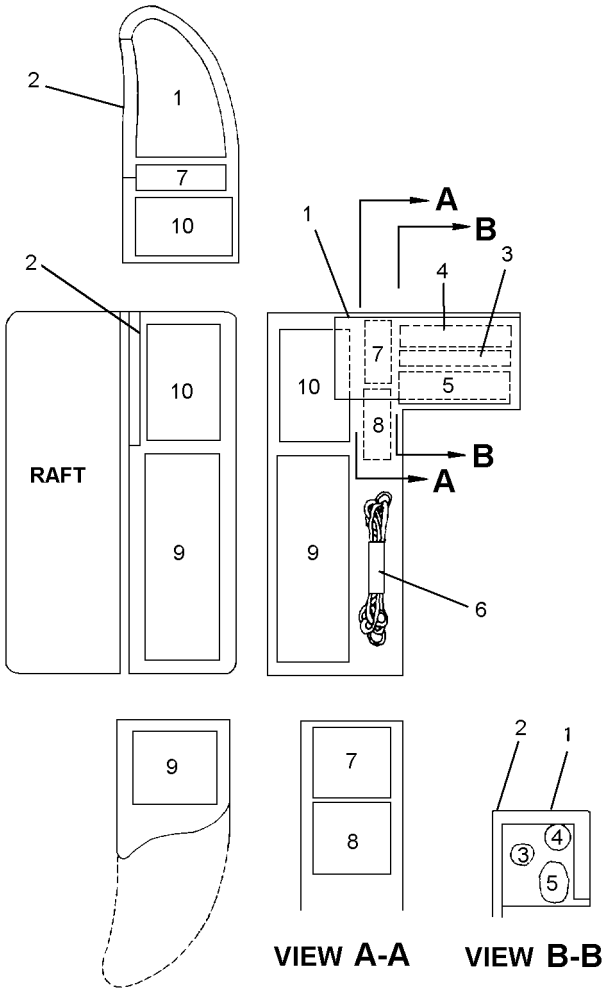

1. BAGGED WATER
2. SPONGE (1/4" X 1 3/4" X 6")
3. DAY/NIGHT DISTRESS SIGNAL
4. COMBAT CASUALTY BLANKET
5. GROUND/AIR EMERGENCY CODE CARD
6. NYLON CORD, TYPE 1 (7 1/2" LONG)
7. SEA DYE MARKER
8. SEA DYE MARKER
9. SRU-31/P PACKET #2
10. SRU-31/P PACKET #1

63-80

Step 2 - Para 3-21

3. Attach red snap to SKK-9 retaining ring. Attach end of survival equipment cord to end loop on main lanyard.

CAUTION

When installing the cover be careful not to puncture bagged drinking water.

4. Install survival equipment cover down and around the equipment.

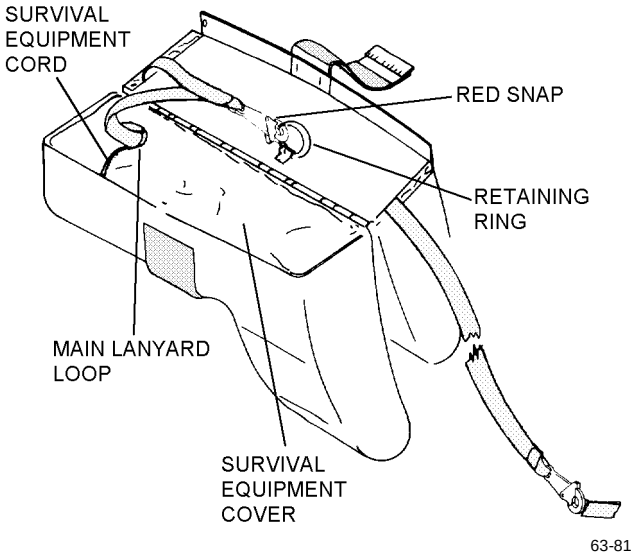

Step 4 - Para 3-21

5. Close survival equipment side. Safety-tie survival kit compartment with a single turn of size E nylon thread at end of "T" section. Tie ends with a surgeon's knot followed by a square knot.

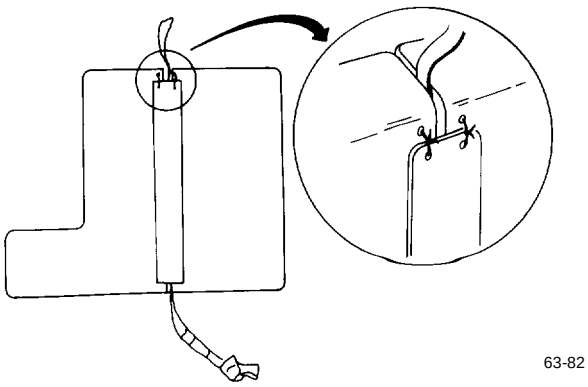

Step 5 - Para 3-21

6. Refer to NAVAIR 13-1-6.2 for final assembly into A/P22P-11 crew backpack.

Section 3-4. Turnaround/Daily/Preflight/Postflight/Transfer/ Special/Conditional Inspection

3-22. GENERAL.

NOTE

For Turnaround/Daily/Preflight/Postflight/ Transfer/Special/Conditional Inspections, the SKK-9 liferaft and survival kit container is inspected as part of the A/P22P-11 crew backpack assembly. Refer to aircraft 01 series cards for inspection procedures.

3-23. The Turnaround/Daily/Preflight/Postflight or Transfer Inspections consist of a visual inspection performed in conjunction with the aircraft inspection requirements for aircraft in which the SKK-9 is installed, these inspections shall be performed by line personnel (plane captain) or delegated aircrewmen who have been instructed and found qualified by the Aviator's Equipment Branch.

3-24. Conditional Inspection is an unscheduled inspection required as a result of a specific situation or set of conditions, e.g., hard-landing inspections or any inspection directed by higher authority that is not ordered in a technical directive.

3-25. The Special Inspection shall be performed on inservice SKK-9's installed in E-2C aircraft and in ready room issue every 14 days. This inspection shall be performed at the Organizational Level of maintenance by personnel assigned to the Aviator's Equipment Branch. Completion and date of inspection shall be documented by making necessary entries on appropriate form in accordance with OPNAVINST 4790.2 Series.

Section 3-5. Acceptance/Phased/SDLM Inspection

3-26. GENERAL.

3-27. The Acceptance Inspection of the SKK-9 is performed at the time the A/P22P-11 crew backpack assembly is placed into service. When the crew backpack assembly is an aircraft inventory item, the Acceptance Inventory Inspection and packing shall serve as the Acceptance Inspection. In this case, the records concerning the crew backpack shall be examined. Phased/SDLM Inspection cycle of the SKK-9 shall correspond to the aircraft Phased/SDLM maintenance cycle as directed by applicable Planned Maintenance System (PMS) publications for specific intervals. In no case shall the phased interval exceed 230 days.

3-28. VISUAL INSPECTION. The visual inspection shall be performed prior to packing of liferaft and survival items.

1. Visually check the SKK-9 for the following:

a. Container for cracks, distortion, and other damage.

b. Handle for security and wear.

c. Any other parts for wear, damage and security.

d. All hardware for security of attachment, corrosion, damage, wear and ease of operation.

e. Container for stains, dirt, proper markings, and general condition.

Section 3-6. Maintenance

3-29. GENERAL.

3-30. This section contains procedures for disassembly, cleaning, inspection of disassembled parts, and repair or replacement of parts for the SKK-9 liferaft and survival kit container.

3-31. DISASSEMBLY. Disassemble the SKK-9 container using the key index numbers assigned to figures 3-7 and 3-8 as a reference.

3-32. CLEANING. To clean the SKK-9 container, proceed as follows:

Materials Required

Quantity	Description	Reference Number
As Required	Drycleaning Solvent Type I, 1 Quart	P-D-680 NIIN 00-664-5685
As Required	Lint-free Cloth	MIL-C-85043 NIIN 00-044-9281

WARNING

Use drycleaning solvent in a well ventilated area. Avoid prolonged contact with skin and inhalation of fumes. Keep away from flame.

1. To clean the fiberglass container of dust and dirt, wipe with a damp cloth. If areas are soiled with grease or oil, moisten cloth with drycleaning compound (P-D-680) before using.

2. Immediately dry with clean, lint-free cloth.

3. Clean metallic parts with drycleaning solvent (P-D-680), following directions on container.

4. Dry metal parts with a lint-free cloth.

3-33. INSPECTION. Inspect the disassembled parts of the SKK-9 container for damage, distortion, corrosion, and other damage.

3-34. REPAIR AND REPLACEMENT. Repair or replace parts of the SKK-9 container as follows:

3-34A. Repair. Repair of individual components within any assembly is authorized only in accordance with procedures outlined in this manual. All authorized repairs performed shall be documented by making necessary entries on appropriate form in accordance with OPNAVINST 4790.2 Series.

3-34B. Replacement. All individual components that fail to pass inspection shall be replaced except where a repair procedure is indicated. Refer to source code listing (SM&R Code) in the Numerical Index of the Illustrated Parts Breakdown to aid in determining replaceable components. All adjustable components or assemblies that have failed to pass respective tests shall be readjusted to meet required specification.

3-34C. Seat Cushion. Replace seat cushion as needed. For fabrication procedures, see paragraph 3-38A.

Section 3-7. Fabrication

3-35. GENERAL.

3-36. This section contains instructions for fabrication of tools and components that can be manufactured by local maintenance activities.

3-37. FABRICATION OF RETAINING LANYARD. Fabricate a retaining lanyard if part cannot be obtained through supply.

3-38. To fabricate a retention lanyard for the SKK-9 liferaft and survival kit container assembly, proceed as follows:

Materials Required

Quantity	Description	Reference Number
2	Snap Hook	MS27756
208″	Webbing, Nylon, Type II, 1-inch Yellow	MIL-W-4088 NIIN 00-262-1643
As Required	Thread, Nylon Type II, Size E	V-T-295 NIIN 00-204-3884

1. Fold webbing to dimensions shown in Figure 3-6 and stitch as shown using size E nylon thread (V-T-295, Type II), 8 to 10 stitches per inch. Backstitch a minimum of 1/2 inch.

NOTE

When fabricating lanyard, the snap hooks must be inserted on lanyard prior to doing any boxstitching. Otherwise, lanyard will not go through holes in the hook.

3-38A. FABRICATION OF REPLACEMENT SEAT CUSHION FOAM. To fabricate a replacement cushion foam for the seat, proceed as follows:

Materials Required

Quantity	Description	Reference Number
1	Blade, Safety Razor	NIIN 00-162-5629

Materials Required (Cont)

Quantity	Description	Reference Number
As Required	CONFOR Foam, CF45100, Blue, 1 Inch Thick	NIIN 01-449-1789
As Required	CONFOR Foam, CF47100, Green, 1 Inch Thick	NIIN 01-370-6116

1. Remove old foam from seat cushion cover.

2. Use the old foam as a template, place old foam on top of CONFOR foam.

NOTE

Ensure bulk CONFOR foam is large enough to make the new foam cushion one piece.

3. Trace around the old foam onto the CONFOR foam.

4. Cut CONFOR foam along the traced line.

5. Install new foam cushion into seat cushion cover. Ensure seat cushion cover fits the cushion foam snugly, but does not cause bowing or excessively loose conditions.

6. Mark the date of installation on an easily visible location on CONFOR foam using permanent ink marker; replace CONFOR foam every two years.

7. Document maintenance action in accordance with OPNAVINST 4790.2 Series.

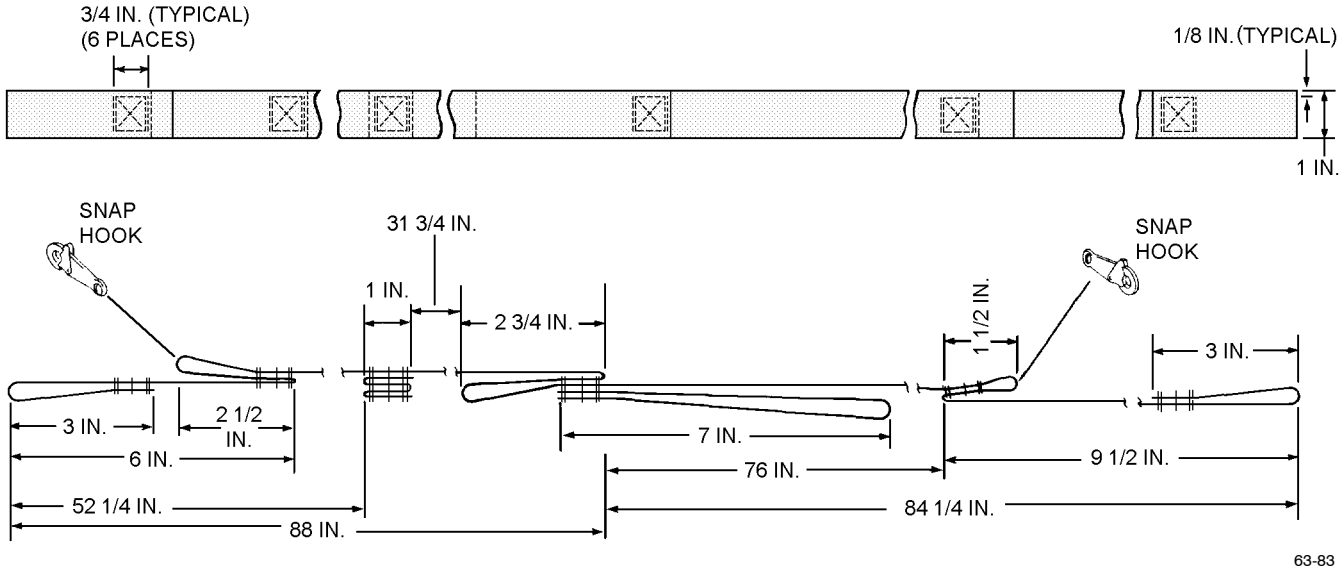

Figure 3-6. Lanyard Assembly

Section 3-8. Illustrated Parts Breakdown (IPB)

3-39. GENERAL.

3-40. This section lists and illustrates the assemblies and detail parts of the SKK-9 Survival Kit Container Assembly.

3-41. The Illustrated Parts Breakdown should be used during maintenance when requisitioning and identifying parts.

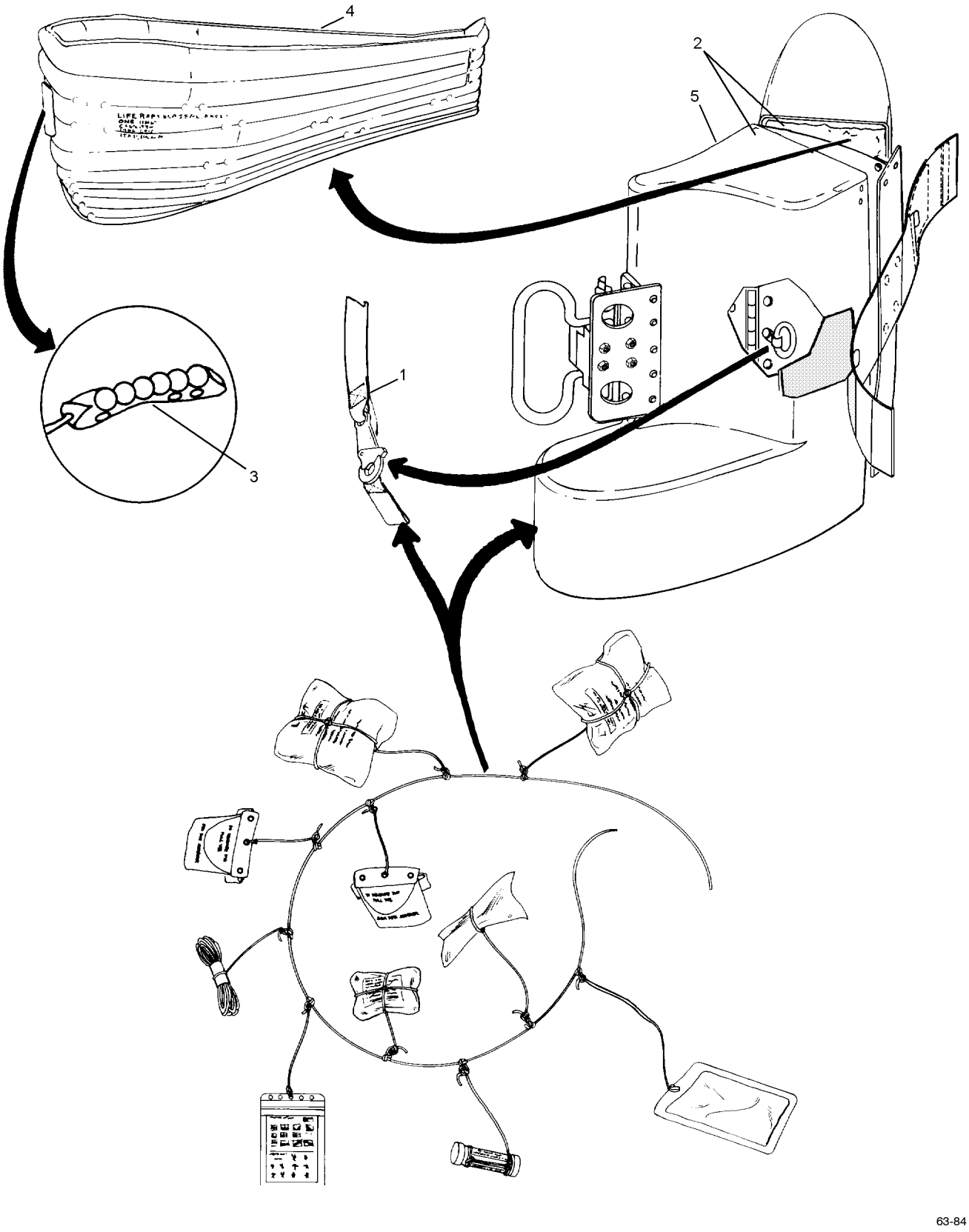

Figure 3-7. SKK-9 Survival Kit and Liferaft Container Assembly

Figure and Index Number	Part Number	Description 1 2 3 4 5 6 7	Units Per Assembly	Usable On Code
3-7	123AB50512-3	CONTAINER ASSEMBLY, Survival Kit . . . . . . (SKK-9/P22P-11)	REF	
-1	123AB50525-3	. LANYARD ASSEMBLY	1	
-2	123AB50538-1	. COVER ASSEMBLY	2	
-3	975AS121-12	. HANDLE ASSEMBLY	1	
-4	1521AS102-1	. LRU-18/U LIFERAFT, (GFE) . . . . . . (See NAVAIR 13-1-6.1-1 for Raft Subassemblies) (NIIN 01-272-8004)	1	
-5	123AB50519-3	. CONTAINER SUBASSEMBLY . . . . . . (See Figure 3-8 for detail BKDN)	1	
-6	DELETED			
-7	DELETED			
-8	DELETED			
-9	DELETED			
-10	DELETED			
-11	DELETED			
-12	DELETED			
	DELETED			
-13	DELETED			
-14	DELETED			

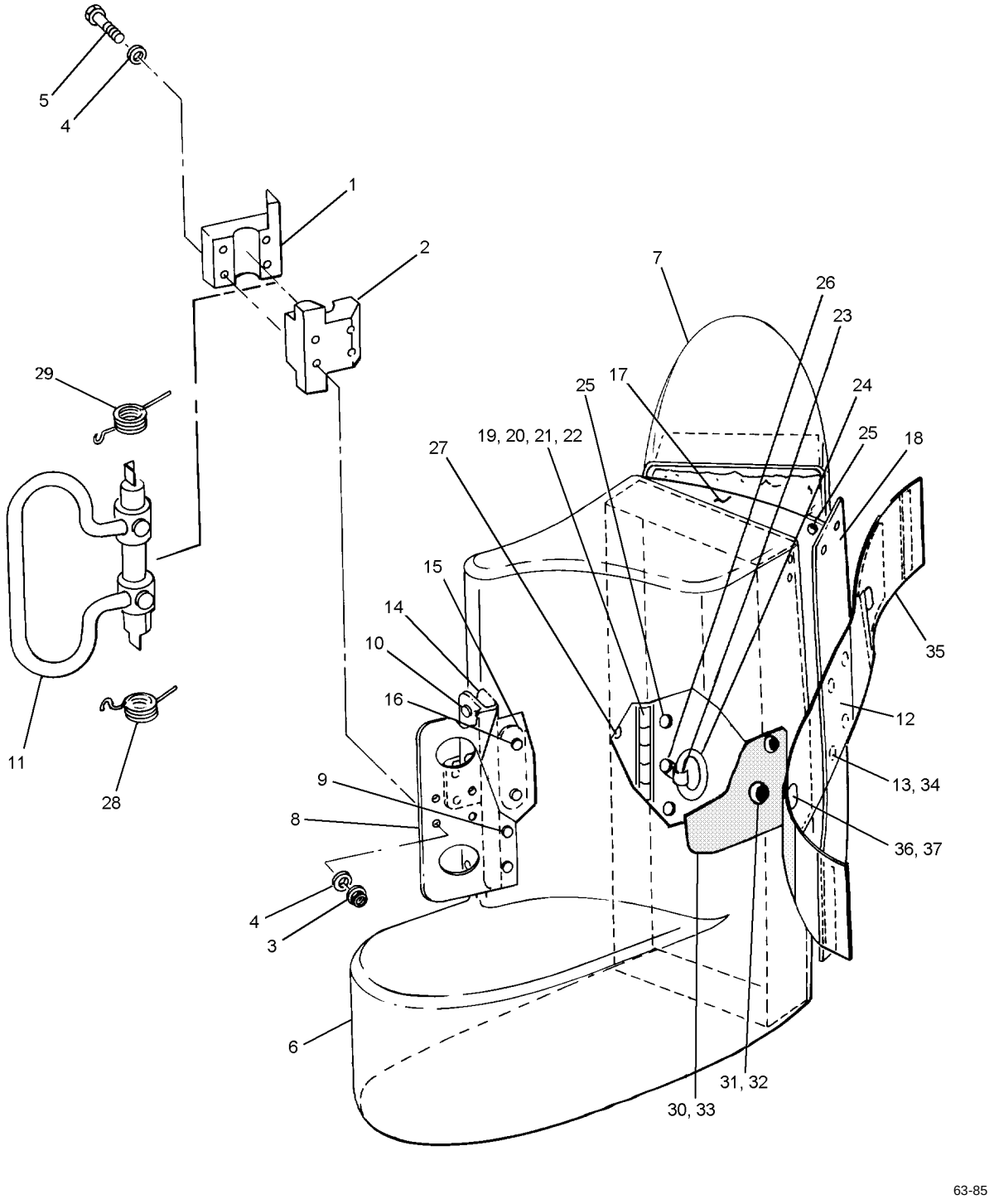

Figure 3-8. SKK-9 Container Subassembly

Figure and Index Number	Part Number	Description 1 2 3 4 5 6 7	Units Per Assembly	Usable On Code
3-8	123AB50519-3	CONTAINER SUBASSEMBLY, Survival Kit ..... (See figure 3-7 for NHA) (NIIN 01-297-3949)	REF	
	123ABM50503-1	. MATCHED SET (NIIN 01-291-9179) ..... (Note 1)	1	
-1	123ABM50503-11	. . BAR MOUNT	1	
-2	123ABM50503-13	. . BAR MOUNT ..... (ATTACHING PARTS)	1	
-3	MS21042L06	. . NUT, Hex, RDC (NIIN 00-807-1472)	4	
-4	AN960D06L	. . WASHER, Flat Plain	8	
-5	GB511DU06-12	. . BOLT, Pan Head ..... ---*---	4	
-6	123ABP50501-11	. CONTAINER (Survival kit side)	1	
-7	123ABP50501-13	. CONTAINER (Liferaft side)	1	
-8	123AB50522-13	. PLATE	1	
-9	MS20470AD5	. RIVET, Universal Head ..... (ATTACHING PARTS)	9	
-10	MS20426AD5	. RIVET, Sol, Flat Head (NIIN 00-117-6888) ..... ---*---	A/R	
-11	123AB50544-1	. HANDLE ASSEMBLY (NIIN 01-318-1393) ..... (Note 2)	1	
-12	123AB50530-19	. PLATE ..... (ATTACHING PARTS)	1	
-13	MS20426AD4	. RIVET, Sol, Flat Head (NIIN 00-117-6952) ..... ---*---	4	
-14	123AB50531-19	. RADIUS BLOCK	1	
-15	123AB50531-21	. SUPPORT ..... (ATTACHING PARTS)	1	
-16	MS20470AD5	. RIVET, Universal Head (Note 3) ..... ---*---	2	
-17	123AB50527-1	. HINGE ASSEMBLY	1	
-18	123AB50527-11	. . WEB (T SECTION)	1	
-19	123AB50527-13	. . STIFFENER	1	
-20	123ABM50504-1	. . HINGE ASSEMBLY	1	
	123ABM50504-11	. . . HINGE HALF	1	
	123ABM50504-13	. . . HINGE HALF	1	
-21	123ABM50504-15	. . . HINGE HALF	1	
-22	MS20253P2-1095	. . PIN, Hinge (NIIN 01-292-6410)	1	
-23	AN742-4	. . CLAMP, Loop (NIIN 00-298-9475)	1	
-24	MS51925-4	. . RING, Dee (NIIN 00-127-7449) ..... (ATTACHING PARTS)	1	
-25	MS20470AD4	. . RIVET, Universal Head ..... (NIIN 01-205-0848)	A/R	
-26	MS20470AD6	. . RIVET, Universal Head ..... (NIIN 00-117-6851)	A/R	

Figure and Index Number	Part Number	Description 1 2 3 4 5 6 7	Units Per Assembly	Usable On Code
3-8-27	MS20470AD5	. . RIVET, Universal Head	18	
		---*---		
-28	GS581D011	. SPRING, Torsion	1	
-29	GS581D012	. SPRING, Torsion (NIIN 01-291-4630)	1	
-30	GT100AS2G4	. TAPE (Note 4)	A/R	
-31	MS27981-4B	. FASTENER, Snap (NIIN 00-901-9660)	2	
-32	MS27981-7B	. FASTENER, Eyelet (NIIN 01-293-1079)	2	
-33	A100AJ1	. ADHESIVE (NIIN 00-165-8614) (Note 4)	A/R	
-34	GM41071B0	. SEALING COMPOUND	A/R	
-35	123AB50543-1	. FLAP ASSEMBLY	1	
-36	MS27981-1B	. FASTENER, Snap (NIIN 00-276-4954)	2	
-37	MS27981-3B	. FASTENER, Snap (NIIN 00-276-4966)	2	

Notes:
1. 123ABM50503-1 must be banked against leg of 123AB50522-13 before drilling holes.
2. Coordinate location with 123AB0526-3.
3. Use GM31071B0 to fill voids after riveting.
4. Bond GT100AS2G4 to 123ABP50501-11 and -13 using GA100AJ1.

NUMERICAL INDEX

Part Number	Figure and Index Number	SM&R Code
AN742-4	3-8-23	
AN960D06L	3-8-4	
GA100AJ1	3-8-33	
GB511DU06-12	3-8-5	
GM41071B0	3-8-34	
BS581D011	3-8-28	
GS581D012	3-8-29	
GT100AS2G4	3-8-30	
MS20253P2-1095	3-8-22	
MS20426AD4	3-8-13	
MS20426AD5	3-8-10	
MS20470AD4	3-8-25	
MS20470AD5	3-8-27	
	3-8-9	
	3-8-16	
MS20470AD6	3-8-26	
MS21042L06	3-8-3	
MS27981-1B	3-8-36	
MS27981-3B	3-8-37	
MS27981-4B	3-8-31	
MS27981-7B	3-8-32	

Part Number	Figure and Index Number	SM&R Code
MS51925-4	3-8-24	
123AB50519-3	3-7-5	
123AB50521-21	3-8-15	
123AB50522-13	3-8-8	
123AB50525-3	3-7-1	
123AB50527-11	3-8-17	
123AB50527-13	3-8-18	
123AB50530-19	3-8-12	
123AB50531-19	3-8-14	
123AB50538-1	3-7-2	
123AB50543-1	3-8-35	
123AB50544-1	3-8-11	
123ABM50503-11	3-8-1	
123ABM50503-12	3-8-2	
123ABM50504-11	3-8-19	
123ABM50504-13	3-8-20	
123ABM50504-15	3-8-21	
123ABP50501-11	3-8-6	
123ABP50501-13	3-8-7	
1521AS102-1	3-7-4	
975AS121-12	3-7-3	

THIS PAGE INTENTIONALLY LEFT BLANK.