TECHNICAL MANUAL

AVIATION-CREW SYSTEMS

INFLATABLE SURVIVAL EQUIPMENT

(LIFE PRESERVERS)

N68936-04-D-0008

This manual update includes Basic, dated 1 October 1995, thru Change 11, dated 1 August 2004.

DISTRIBUTION STATEMENT C. Distribution authorized to U.S. Government agencies and their contractors to protect publications required for official use or for administrative or operational purposes only, determined on 1 July 1993. Other requests for this document shall be referred to Commanding Officer, Naval Air Technical Data and Engineering Service Command, Naval Air Station North Island, P.O. Box 357031, Building 90 Distribution, San Diego, CA 92135-7031.

DESTRUCTION NOTICE — For unclassified, limited documents, destroy by any method that will prevent disclosure of contents or reconstruction of the document.

Published by Direction of the Commander, Naval Air Systems Command

1 OCTOBER 1995
CHANGE 11 - 1 AUGUST 2004

LIST OF EFFECTIVE PAGES

Insert latest changed pages; dispose of superseded pages in accordance with applicable regulations.

NOTE: On a changed page, the portion of the text affected by the latest change is indicated by a vertical line, or other change symbol, in the outer margin of the page. Changes to illustrations are indicated by miniature pointing hands. Changes to wiring diagrams are indicated by shaded areas.

Dates of issue for original and changed pages are:

Original . . . . . 1 Oct 1995
Change 1 . . . . . 1 Nov 1997
(IRACs 1 and 2 cancelled)
(Incorp IRACs 3, 4, and 5)
Change 2 . . . . . 1 Dec 1998
(IRAC 8 cancelled)
(Incorp IRACs 6, 7, and 9 thru 12)
Change 3 . . . . . 1 Sep 1999
(Incorp IRACs 13 thru 18)
Change 4 . . . . . 1 Jan 2000
(Incorp IRAC 19)
Change 5 . . . . . 1 Jun 2000
(IRAC 20 cancelled)
(Incorp IRACs 21 thru 23)
Change 6 . . . . . 1 Dec 2000
(Incorp IRAC 24)
Change 7 . . . . . 1 Nov 2001
Change 8 . . . . . 1 Sep 2002
(IRAC 26 cancelled)
(Incorp IRACs 25 and 27)
Change 9 . . . . . 1 Jun 2003
(Incorp IRACs 28 and 29)
Change 10 . . . . . 1 Jan 2004
Change 11 . . . . . 1 Aug 2004
(Incorp IRAC 30)

Total number of pages in this manual is 732 consisting of the following:

Page No.	#Change No.	Page No.	#Change No.	Page No.	#Change No.
Title	11	5-2	1	6-8	9
A — D	11	5-3 — 5-7	11	6-9 — 6-11	8
E Blank	11	5-8	5	6-12 — 6-13	11
i	11	5-9	3	6-14 — 6-17	5
ii	8	5-10	1	6-18	11
iiA	7	5-11	11	6-19	5
iiB Blank	7	5-12	1	6-20	6
iii — vi	4	5-13	7	6-21	11
vii	2	5-14	4	6-22 — 6-25	5
viii	3	5-15	1	6-26	8
ix	1	5-16	5	6-27	11
x	8	5-17	1	6-28 — 6-30	5
xA	7	5-18 — 5-19	5	6-31 — 6-32	11
xB Blank	7	5-20	6	7-1 — 7-3	8
xi — xiv	4	5-21	5	7-4	11
xv	8	5-22	3	7-5	8
xvi — xvii	7	5-23	5	7-6 Blank	8
xviii Blank	7	5-24 Blank	5	8-1	11
1-1 — 1-3	10	5-25	11	8-2 — 8-4	7
1-4 Blank	10	5-26 — 5-28	1	8-5 — 8-7	11
2-1 — 2-5	11	5-29 — 5-31	11	8-8 — 8-10	7
2-6 Blank	11	5-32 Blank	11	8-11	9
3-1	4	6-1	11	8-12	8
3-2 — 3-4	0	6-2	5	8-13	7
4-1	8	6-3	8	8-14 — 8-16	8
4-2 Blank	8	6-4	5	8-17	7
4-3 — 4-39 Deleted	8	6-5	11	8-18	8
4-40 Blank Deleted	8	6-6	9	8-19	11
5-1	11	6-7	11	8-20 — 8-21	7

Major changes resulting from this change are as follows:

1. Miscellaneous changes.
2. Incorporation of IRAC 30 (To authorize the use of the LPU-37/P with the A/P22P-11 Emergency Egress Crew Backpack Assembly and the A/P22P-20, Crew Backpack Assembly, and to add the LPU-32/P Passenger Life Preserver as an authorized substitute for the pouch type preserver used by Marine troops.

Zero in this column indicates an original page.

LIST OF EFFECTIVE PAGES (Cont)

Page No.	#Change No.
8-22 — 8-24	11
9-1	0
9-2 Blank	0
10-1	0
10-2 Blank	0
11-1	0
11-2 Blank	0
12-1	0
12-2 Blank	0
13-1	4
13-2 Blank	4
14-1 — 14-2	0
14-3	1
14-4	0
14-5	4
14-6	1
14-7	0
14-8 — 14-9	3
14-10	11
14-11	1
14-12	0
14-13	3
14-14	0
14-15	11
14-16	5
14-17 — 14-18	0
14-19 — 14-20	1
14-21 — 14-23	0
14-24	11
14-25	0
14-26	5
14-27	0
14-28	5
14-29 — 14-30	6
14-31 — 14-32	0
14-33	1
14-34 — 14-35	0
14-36	1
14-37 — 14-43	0
14-44	5
14-45	0
14-46 Blank	0
15-1	1
15-2	0
15-3 — 15-4	1
15-5 — 15-6	4
15-7	0
15-8	4
15-9	0
15-10	11
15-11	8
15-12	1
15-13 — 15-14	0
15-15	11
15-16	1
15-16A	1
15-16B Blank	1
15-17 — 15-19	5
15-20 Blank	5
15-21	11
15-22	5
15-23 — 15-24	0
15-25	5
15-26 — 15-27	6
15-28 — 15-29	0
15-30	11
15-31 — 15-35	0
15-36	11
15-36A — 15-36B	1
15-36C	11
15-36D Blank	11
15-37 — 15-38	0
15-39	4
15-40 — 15-43	0
15-44	4
15-45	1
15-46	5
15-47	1
15-48 Blank	1
16-1	1
16-2	0
16-3	1
16-4	4
16-5	0
16-6	1
16-7 — 16-8	0
16-9	3
16-10	4
16-11	8
16-12	5
16-13	11
16-14 — 16-15	1
16-16	0
16-17	1
16-18	0
16-19	11
16-20	1
16-21 — 16-22	8
16-23 — 16-24	0
16-25	8
16-26	1
16-27 — 16-28	4
16-29 — 16-31	0
16-32	11
16-33	5
16-34	0
16-35	1
16-36	8
16-37	0
16-38	4
16-39	6
16-40	0
16-41	1
16-42 — 16-43	6
16-44 — 16-45	0
16-46	1
16-47 — 16-48	0
16-49 — 16-50	1
16-51 — 16-54	0
16-55	1
16-56	0
16-57 — 16-58	8
17-1 — 17-2	0
17-3	1
17-4	4
17-5	1
17-6 — 17-7	0
17-8	3
17-9	11
17-10	1
17-11	6
17-12	1
17-13	0
17-14	1
17-15	11
17-16 — 17-18	0
17-19 — 17-20	1
17-21 — 17-23	0
17-24	11
17-25	0
17-26	5
17-27	0
17-28	5
17-29 — 17-30	6
17-31 — 17-32	0
17-33	11
17-34 — 17-44	0
17-45 — 17-46	8
18-1 — 18-2	0
18-3	1
18-4	8
18-5	0
18-6	4
18-7	3
18-8	0
18-9	3
18-10	0
18-11	4
18-12	8
18-13	4
18-14	11
18-15	8
18-16 — 18-17	1
18-18	0
18-19	11
18-20	5
18-21	8
18-22	4
18-23 — 18-25	5
18-26 Blank	5
18-27 — 18-28	5
18-29 — 18-30	0
18-31	11
18-32	5
18-33 — 18-34	0
18-35	8
18-36	0

Zero in this column indicates an original page.

LIST OF EFFECTIVE PAGES (Cont)

Page No.	#Change No.
18-37	4
18-38	6
18-39 — 18-40	0
18-41	5
18-42	6
18-43 — 18-44	0
18-45	11
18-46 — 18-47	0
18-48	1
18-49 — 18-50	0
18-51	1
18-52 — 18-58	0
18-59 — 18-60	8
19-1	4
19-2 Blank	4
20-1	6
20-2	4
20-3	11
20-4	0
20-5	1
20-6 — 20-7	0
20-8	11
20-9	0
20-10 — 20-12	1
20-13	0
20-14	11
20-15 — 20-16	0
20-17 — 20-19	1
20-20 — 20-22	0
20-23 — 20-24	6
20-25	0
20-26	3
20-27 — 20-29	0
20-30 Blank	0
21-1	4
21-2 Blank	4
22-1	0
22-2	1
22-3	0
22-4	1
22-5 — 22-6	0
22-7	11
22-8 — 22-9	1
22-10	0
22-11	11
22-12 — 22-14	0
22-15 — 22-17	1
22-18	0
22-19	5
22-20 — 22-21	6
22-22 — 22-31	0
22-32 Blank	0
23-1	11
23-2	1
23-3	0
23-4	6
23-5 — 23-6	0
23-7	11
23-8 — 23-9	1
23-10	0
23-11	11
23-12 — 23-13	0
23-14	1
23-15	5
23-16	1
23-17	0
23-18 — 23-19	6
23-20	8
23-21 — 23-26	0
24-1	2
24-2	1
24-3 — 24-4	5
24-5	1
24-6	0
24-7	2
24-8	11
24-9	1
24-10	0
24-11	6
24-12	11
24-12A	6
24-12B Blank	6
24-13 — 24-14	0
24-15	2
24-16	1
24-17	0
24-18 — 24-21	6
24-22	8
24-23 — 24-24	0
24-25	8
24-26 — 24-27	0
24-28	5
24-29	0
24-30 Blank	0
25-1	11
25-2	4
25-3	6
25-4	4
25-5 — 25-6	8
25-7	1
25-8	11
25-9 — 25-11	3
25-12	11
25-13	5
25-14	1
25-15 — 25-16	5
25-17	1
25-18 — 25-19	3
25-20	5
25-21 — 25-22	6
25-23 — 25-24	3
25-25 — 25-26	2
25-27 — 25-30	1
25-31 — 25-34	5
26-1 — 26-2	0
26-3	1
26-4	0
26-5	4
26-6	1
26-7	0
26-8	3
26-9	0
26-10	11
26-11 — 26-12	1
26-13 — 26-14	0
26-15	11
26-16 — 26-18	0
26-19 — 26-21	1
26-22	11
26-23	5
26-24	0
26-25	5
26-26 — 26-27	6
26-28 — 26-30	0
26-31	11
26-32 — 26-34	0
26-35	11
26-36	0
26-37	8
26-38 — 26-40	0
26-41	1
26-42 — 26-46	0
26-47	5
26-48	0
27-1	0
27-2 — 27-3	1
27-4 — 27-5	0
27-6	4
27-7 — 27-8	0
27-9	3
27-10	0
27-11 — 27-12	5
27-13	4
27-14	11
27-15 — 27-16	1
27-17 — 27-18	0
27-19	11
27-20 — 27-21	8
27-22 — 27-23	0
27-24	1
27-25	4
27-26 Blank	4
27-27	11
27-28	0
27-29	5
27-30	0
27-31	8
27-32	0
27-33	4
27-34	6
27-35 — 27-36	0
27-37	5
27-38	6
27-39 — 27-41	0
27-42	1
27-43 — 27-44	0
27-45	1

Zero in this column indicates an original page.

LIST OF EFFECTIVE PAGES (Cont)

Page No.	#Change No.
27-46	11
27-47 — 27-48	0
27-49 — 27-51	1
27-52 — 27-56	0
27-57	1
27-58 — 27-59	8
27-60 Blank	8
A-1	0
A-2 Blank	0
B-1 — B-17	0
B-18 Blank	0
C-1 — C-3	11
C-4 Blank	11
Glossary-1	10
Glossary-2 — Glossary-4	0
Glossary-5	8
Glossary-6	4
Glossary-7	0
Glossary-8 Blank	0
Index-1	11
Index-2 — Index-7	8
Index-8	11
Index-9	8
Index-10	11
Index-11 — Index 21	8
Index-22 Blank	8

Zero in this column indicates an original page.

THIS PAGE INTENTIONALLY LEFT BLANK.

TABLE OF CONTENTS

Chapter		Page
1	INTRODUCTION	
1-1.	General	1-1
1-6.	Description of NAVAIR 13-1-6.1-2	1-2
1-17.	Allowance Listing of Inflatable Survival Equipment	1-3
1-19.	Levels of Maintenance	1-3
1-21.	Supplementary Publications	1-3
1-23.	Definitions	1-3
2	MAINTENANCE CONCEPTS, SCHEDULING AND DOCUMENTATION	
	(Section 2-1. Maintenance Concepts)	
2-1.	General	2-1
	(Section 2-2. Maintenance Scheduling)	
2-5.	General	2-1
	(Section 2-2A. Accident Evaluation)	
2-6A.	Aircraft Accident Report Inspection	2-1
	(Section 2-3. Maintenance Documents)	
2-7.	General	2-2
	(Section 2-4. Illustrated Parts Breakdown)	
2-10.	General	2-2
2-13.	Group Assembly Parts List	2-2
2-22.	Numerical Index	2-4
3	LIFE PRESERVER SPECIAL TOOLS AND SUPPORT EQUIPMENT	
	(Section 3-1. Description)	
3-1.	General	3-1
	(Section 3-2. Life Preserver Support Equipment)	
3-3.	Leak Test Fixture	3-1
3-4A.	Temperature and Barometric Pressure Gages	3-1
3-5.	Pneumatic Inflator Valve (Check Valve) Core Tool	3-1
	(Section 3-3. Illustrated Parts Breakdown)	
3-7.	General	3-2
4	DELETED	

TABLE OF CONTENTS (Cont)

Chapter Page

5 LPU-34/P LOW PROFILE FLOATATION COLLAR LIFE PRESERVER

(Section 5-1. Description)

5-1. General 5-1
5-3. Configuration 5-1
5-6. Application 5-1
5-8. Function 5-1

(Section 5-2. Modifications)

5-11. General 5-3

(Section 5-3. Maintenance)

5-13. General 5-3
5-15. Inspection 5-3
5-29. Repair/Replacement 5-6
5-31. Testing 5-8
5-35. Deflation 5-10
5-37. Packing Procedures 5-11
5-39. Cleaning and Saltwater Decontamination 5-25

(Section 5-4. Illustrated Parts Breakdown)

5-42. General 5-27

6 LPU-36/P LOW PROFILE FLOATATION COLLAR LIFE PRESERVER

(Section 6-1. Description)

6-1. General 6-1
6-4. Configuration 6-1
6-7. Application 6-4
6-9. Function 6-4

(Section 6-2. Modifications)

6-15. General 6-4

TABLE OF CONTENTS (Cont)

Chapter Page

(Section 6-3. Maintenance)

6-17. General 6-5
6-19. Inspection 6-5
6-37. Repair/Replacement 6-10
6-42. Testing 6-14
6-47. Deflation 6-18
6-49. Packing Procedures for LPU-36/P Life Preserver (LPFC) 6-18
6-51. Cleaning and Saltwater Decontamination 6-28

(Section 6-4. Illustrated Parts Breakdown)

6-54. General 6-28

7 TRI-SAR HARNESS ASSEMBLY FLOATATION VEST, P/N 487VB, FOR SEARCH AND RESCUE OPERATIONS

7-1. General 7-1
7-3. Maintenance 7-1

8 LPU-37/P LOW PROFILE FLOATATION COLLAR LIFE PRESERVER

(Section 8-1. Description)

8-1. General 8-1
8-3. Configuration 8-1
8-6. Application 8-1
8-8. Function 8-1

(Section 8-2. Modifications)

8-11. General 8-3

(Section 8-3. Maintenance)

8-13. General 8-3
8-15. Inspection 8-3
8-29. Repair/Replacement 8-6
8-33. Testing 8-8
8-37. Deflation 8-10
8-39. Packing Procedures 8-11
8-41. Cleaning and Saltwater Decontamination 8-20

(Section 8-4. Illustrated Parts Breakdown)

8-44. General 8-22

9 RESERVED

10 RESERVED

11 RESERVED

12 RESERVED

THIS PAGE INTENTIONALLY LEFT BLANK.

TABLE OF CONTENTS (Cont)

Chapter Page

13 DELETED

14 LPU-21/P SERIES LIFE PRESERVER ASSEMBLY

(Section 14-1. Description)

14-1. General 14-1
14-5. Configuration 14-1
14-14. Application 14-4
14-16. Function 14-4

(Section 14-2. Modifications)

14-19. General 14-5

(Section 14-3. Maintenance)

14-21. General 14-7
14-23. Inspection 14-7
14-48. Cleaning and Servicing 14-13
14-53. Repair/Replacement 14-16
14-78. Packing Procedure for LPU-21/P Life Preserver Assembly 14-33

(Section 14-4. Illustrated Parts Breakdown)

14-81. General 14-42

15 LPU-21D/P AND LPU-35/P LIFE PRESERVER ASSEMBLIES

(Section 15-1. Description)

15-1. General 15-1
15-3. Configuration 15-1
15-15. Application 15-5
15-17. Function 15-5

(Section 15-2. Modifications)

15-21. General 15-6

(Section 15-3. Maintenance)

15-24. General 15-7
15-26. Inspection 15-7
15-51. Cleaning and Servicing 15-13
15-56. Repair/Replacement 15-15
15-85. Packing Procedure for LPU-21D/P and LPU-35/P Life Preserver Assemblies 15-39

(Section 15-4. Illustrated Parts Breakdown)

15-87. General 15-44

TABLE OF CONTENTS (Cont)

Chapter Page

16 LPU-23/P SERIES LIFE PRESERVER ASSEMBLY

(Section 16-1. Description)

16-1. General 16-1
16-4. Configuration 16-1
16-12. Application 16-4
16-14. Function 16-5

(Section 16-2. Modifications)

16-18. General 16-5

(Section 16-3. Maintenance)

16-20. General 16-7
16-22. Inspection 16-7
16-49. Cleaning and Servicing 16-18
16-55. Repair/Replacement 16-22
16-84. Packing Procedure for LPU-23/P Life Preserver Assembly 16-50

(Section 16-4. Illustrated Parts Breakdown)

16-87. General 16-55

17 LPU-27/P22P-7(V) LIFE PRESERVER ASSEMBLY

(Section 17-1. Description)

17-1. General 17-1
17-5. Configuration 17-1
17-14. Application 17-4
17-16. Function 17-5

(Section 17-2. Modifications)

17-19. General 17-5

(Section 17-3. Maintenance)

17-21. General 17-6
17-23. Inspection 17-6
17-47. Cleaning and Servicing 17-13
17-52. Repairs/Replacement 17-16
17-78. Packing Procedure for LPU-27/P22P-7(V) Life Preserver Assembly 17-36

(Section 17-4. Illustrated Parts Breakdown)

17-81. General 17-43

TABLE OF CONTENTS (Cont)

Chapter Page

18 LPU-23C/P LIFE PRESERVER ASSEMBLY

(Section 18-1. Description)

18-1. General 18-1
18-4. Configuration 18-1
18-13. Application 18-5
18-15. Function 18-5

(Section 18-2. Modifications)

18-21. General 18-6

(Section 18-3. Maintenance)

18-23. General 18-8
18-25. Inspection 18-8
18-51. Cleaning and Servicing 18-18
18-57. Repairs/Replacement 18-22
18-89. Packing Procedure for LPU-23C/P Life Preserver Assembly 18-52

(Section 18-4. Illustrated Parts Breakdown)

18-92. General 18-57

19 DELETED

20 LPP-1 AND -1A LIFE PRESERVER ASSEMBLIES

(Section 20-1. Description)

20-1. General 20-1
20-3. Configuration 20-1
20-9. Application 20-3
20-11. Function 20-3
20-13. Donning Procedure 20-3

(Section 20-2. Modifications)

20-15. General 20-4

(Section 20-3. Maintenance)

20-17. General 20-5
20-19. Inspection 20-5
20-43. Cleaning and Servicing 20-13
20-48. Repair/Replacement 20-15
20-65. Packing Procedure for LPP-1 and -1A Life Preserver Assemblies 20-25

(Section 20-4. Illustrated Parts Breakdown)

20-68. General 20-26

TABLE OF CONTENTS (Cont)

Chapter Page

21 DELETED

22 LPU-31/P LIFE PRESERVER ASSEMBLY

(Section 22-1. Description)

22-1. General 22-1
22-3. Configuration 22-1
22-7. Function 22-1
22-9. Donning Procedure 22-1

(Section 22-2. Modifications)

22-11. General 22-4

TABLE OF CONTENTS (Cont)

Chapter Page

(Section 22-3. Maintenance)

22-13. General 22-5
22-15. Inspection 22-5
22-38. Cleaning and Servicing 22-10
22-43. Repair/Replacement 22-13
22-62. Packing Procedure for LPU-31/P Life Preserver Assembly 22-28

(Section 22-4. Illustrated Parts Breakdown)

22-65. General 22-28

23 POUCH TYPE LIFE PRESERVER ASSEMBLY

(Section 23-1. Description)

23-1. General 23-1
23-3. Configuration 23-1
23-8. Application 23-1
23-10. Function 23-1
23-12. Donning Procedures 23-1

(Section 23-2. Modifications)

23-14. General 23-4

(Section 23-3. Maintenance)

23-16. General 23-5
23-18. Inspection 23-5
23-42. Cleaning and Servicing 23-10
23-47. Repairs/Replacement 23-13
23-63. Packing Procedure for Pouch Type Life Preserver 23-21

(Section 23-4. Illustrated Parts Breakdown)

23-65. General 23-23

24 LPU-28/P and LSC (P/N 482) LIFE PRESERVER ASSEMBLIES

(Section 24-1. Description)

24-1. General 24-1
24-3. Configuration 24-1
24-7. Application 24-1
24-9. Function 24-1
24-11. Donning Procedure 24-4

TABLE OF CONTENTS (Cont)

Chapter Page

(Section 24-2. Modifications)

24-13. General 24-4

(Section 24-3. Maintenance)

24-15. General 24-5
24-17. Inspection 24-5
24-40. Cleaning and Servicing 24-10
24-46. Repairs/Replacement 24-13
24-65. Packing Procedure for LPU-28/P Life Preserver Assembly 24-25

(Section 24-4. Illustrated Parts Breakdown)

24-67. General 24-25

25 LPU-32/P LIFE PRESERVER ASSEMBLY

(Section 25-1. Description)

25-1. General 25-1
25-3. Configuration 25-1
25-9. Application 25-1
25-11. Function 25-1
25-13. Donning Procedure 25-3

(Section 25-2. Modifications)

25-15. General 25-3

(Section 25-3. Maintenance)

25-17. General 25-5
25-19. Inspection 25-5
25-43. Cleaning and Servicing 25-11
25-47. Repair/Replacement 25-13
25-66. Packing LPU-32/P Life Preserver Assembly 25-24

(Section 25-4. Illustrated Parts Breakdown)

25-69. General 25-30

26 LPU-21C(V)1/P LIFE PRESERVER ASSEMBLY

(Section 26-1. Description)

26-1. General 26-1
26-3. Configuration 26-1
26-15. Application 26-4
26-17. Function 26-5

(Section 26-2. Modifications)

26-21. General 26-5

(Section 26-3. Maintenance)

26-24. General 26-7

TABLE OF CONTENTS (Cont)

Chapter Page

26-26. Inspection 26-7
26-50. Cleaning and Servicing 26-14
26-55. Repair/Replacement 26-16
26-85. Packing Procedure for LPU-21C(V)1/P Life Preserver Assembly 26-39

(Section 26-4. Illustrated Parts Breakdown)

26-87. General 26-45

27 LPU-23B(V)1/P LIFE PRESERVER ASSEMBLY

(Section 27-1. Description)

27-1. General 27-1
27-4. Configuration 27-1
27-13. Application 27-5
27-15. Function 27-5

(Section 27-2. Modifications)

27-21. General 27-6

(Section 27-3. Maintenance)

27-23. General 27-7
27-25. Inspection 27-7
27-51. Cleaning and Servicing 27-17
27-57. Repairs/Replacement 27-21
27-90. Packing Procedure for LPU-23B(V)1/P Life Preserver Assembly 27-49

(Section 27-4. Illustrated Parts Breakdown)

27-93. General 27-56

Appendix A Reserved A-1
Appendix B Metric System and Metric Conversion Charts B-1
Appendix C Equipment, Materials and Supplies C-1
Glossary Glossary-1
Alphabetical Index Index-1

LIST OF ILLUSTRATIONS

Figure	Title	Page
3-1.	Leak Test Schematic	3-2
3-2.	Core Tool	3-2
3-3.	Leak Test Fixture - Life Preserver	3-3
4-1. thru 4-11. Deleted		
5-1.	LPU-34/P, Life Preserver, Low Profile Floatation Collar (LPFC)	5-2
5-2.	LPU-34/P Markings	5-6
5-3.	Cylinder Thread Count	5-7
5-4.	Leakage Test Fixture Schematic	5-9
5-5.	Temperature and Barometric Pressure Test Record	5-9
5-6.	LPU-34/P Inflation Shell Assembly	5-14
5-7.	LPU-34/P Life Preserver, Packed	5-26
5-8.	LPU-34/P, Low Profile Floatation Collar, Life Preserver	5-28
6-1.	LPU-36/P, Life Preserver, Low Profile Floatation Collar (LPFC)	6-2
6-2.	Automatic Inflation Device, FLU-8B/P	6-3
6-3.	LPU-36/P Markings	6-8
6-4.	Lot Numbering System for FLU-8B/P Automatic Inflators	6-9
6-5.	Battery Installation Arrangement	6-9
6-6.	Cylinder Thread Count	6-13
6-7.	Leakage Test Fixture Schematic	6-16
6-8.	Temperature and Barometric Pressure Test Record	6-17
6-9.	LPU-36/P, Low Profile Floatation Collar, Life Preserver	6-29
8-1.	LPU-37/P, Life Preserver, Low Profile Floatation Collar (LPFC)	8-2
8-2.	LPU-37/P Markings	8-6
8-3.	Cylinder Thread Count	8-7
8-4.	Leakage Test Fixture Schematic	8-9
8-5.	Temperature and Barometric Pressure Test Record	8-9
8-6.	LPU-37/P, Low Profile Floatation Collar, Life Preserver	8-21
13-1. thru 13-10. Deleted		
14-1.	LPU-21/P Series Life Preserver Assembly	14-2
14-2.	LPU-21/P Series Life Preserver Assembly, Parts Nomenclature	14-3
14-3.	Test Fixture Schematic	14-12
14-4.	Installation of Inflation Valve Protective Cover	14-15
14-5.	Cylinder Thread Count	14-16
14-6.	Deleted	
14-7.	Flare Pouch Repair	14-25

LIST OF ILLUSTRATIONS (Cont)

Figure	Title	Page
14-8.	CO_2 Inflation Assembly	14-28
14-9.	Addition of Webbing Loops	14-32
14-10.	Fabrication of Locking Pin Cover	14-34
14-11.	Locking Pin Cover Installation	14-35
14-12.	Deleted	
14-13.	LPU-21/P Series Life Preserver Assembly Illustrated Parts Breakdown	14-43
15-1.	LPU-21D/P Life Preserver Assembly	15-2
15-2.	LPU-21D/P and LPU-35/P Life Preserver Assembly, Parts Nomenclature	15-3
15-3.	Test Fixture Schematic	15-12
15-4.	Installation of Inflation Valve Protective Cover	15-14
15-5.	Cylinder Thread Count	15-15
15-6.	Deleted	
15-7.	Flare Pouch Repair	15-22
15-8.	CO_2 Inflation Assembly	15-25
15-9.	Addition of Webbing Loops	15-30

THIS PAGE INTENTIONALLY LEFT BLANK.

LIST OF ILLUSTRATIONS (Cont)

Figure	Title	Page
15-10.	Attachment Patch Installation Dimensions	15-32
15-11.	Installation Casing Attachment Patch Snap Fastener Studs	15-33
15-12.	Fabrication of Locking Pin Cover LPU-21D/P	15-34
15-13.	Locking Pin Cover Installation LPU-21D/P	15-35
15-13A.	Fabrication of Casing Assembly Extension Panel	15-36A
15-13B.	Casing Assembly Extension Panel Dimensions	15-36B
15-14.	Collar Casing Shoulder Strap Fabrication and Installation	15-37
15-15.	Replacement of Flotation Bladder Collar Lobe Snap Fastener Studs	15-38
15-16.	LPU-21D/P Packing Nomenclature	15-42
15-17.	Packing LPU-21D/P Life Preserver	15-43
15-18.	LPU-21D/P and LPU-35/P Life Preserver Assembly Illustrated Parts Breakdown	15-45
16-1.	LPU-23/P Series Life Preserver Assembly	16-2
16-2.	LPU-23/P Series Life Preserver Assembly, Parts Nomenclature	16-3
16-3.	Lot Numbering System for FLU-8B/P Automatic Inflators	16-11
16-4.	Battery Removal	16-11
16-5.	Test Fixture Schematic	16-16
16-6.	Installation of Inflation Valve Protective Cover	16-19
16-7.	Cylinder Thread Count	16-20
16-8.	Inserting New O-ring and CO_2 Cylinder	16-21
16-9.	Battery Installation Arrangement	16-22
16-10.	Deleted	
16-11.	Deleted	
16-12.	Flare Pouch Repair	16-32
16-13.	Packaging Cord Loop Routing	16-39
16-14.	FLU-8B/P Sensor Plug Cap	16-42
16-15.	Addition of Webbing Loops	16-46
16-16.	Fabrication of Locking Pin Cover	16-47
16-17.	Locking Pin Cover Installation	16-48
16-18.	Deleted	
16-19.	LPU-23/P Series Life Preserver Assembly Illustrated Parts Breakdown	16-56
17-1.	LPU-27/P22P-7(V) Life Preserver Assembly	17-2
17-2.	LPU-27/P22P-7(V) Life Preserver Assembly, Parts Nomenclature	17-3
17-3.	Test Fixture Schematic	17-12
17-4.	Installation of Inflation Valve Protective Cover	17-14
17-5.	Cylinder Thread Count	17-15
17-6.	Deleted	
17-7.	Flare Pouch Repair	17-25
17-8.	CO_2 Inflation Assembly	17-28
17-9.	Addition of Webbing Loops	17-32
17-10.	Fabrication of Locking Pin Cover	17-34
17-11.	Locking Pin Cover Installation	17-35
17-12.	Fabrication of Casing Webbing Belt Extension Panel	17-37
17-13.	Casing Webbing Belt Extension Panel Dimensions	17-38
17-14.	LPU-27/P22P-7(V) Life Preserver Assembly Illustrated Parts Breakdown	17-44
18-1.	LPU-23C/P Life Preserver Assembly	18-2
18-2.	LPU-23C/P Life Preserver Assembly, Parts Nomenclature	18-3
18-3.	Automatic Inflation Device FLU-8B/P	18-4

LIST OF ILLUSTRATIONS (Cont)

Figure	Title	Page
18-4.	Lot Numbering System for FLU-8B/P Automatic Inflators	18-11
18-5.	Battery Removal	18-12
18-6.	Test Fixture Schematic	18-17
18-7.	Installation of Inflation Valve Protective Cover	18-19
18-8.	Cylinder Thread Count	18-20
18-9.	Battery Installation Arrangement	18-21
18-10.	Deleted	
18-11.	Deleted	
18-12.	Flare Pouch Repair	18-31
18-13.	Packaging Cord Loop Routing	18-39
18-14.	FLU-8B/P Sensor Plug Cap	18-41
18-15.	Addition of Webbing Loops	18-45
18-16.	Attachment Patch Installation Dimensions	18-47
18-17.	Installation Casing Attachment Patch Snap Fastener Studs	18-48
18-18.	Fabrication of Locking Pin Cover	18-49
18-19.	Locking Pin Cover Installation	18-50
18-20.	Deleted	
18-21.	Packing LPU-23C/P Life Preserver	18-57
18-22.	LPU-23C/P Life Preserver Assembly Illustrated Parts Breakdown	18-58
19-1. thru 19-17. Deleted		
20-1.	LPP-1 and -1A Life Preserver Assemblies	20-2
20-2.	Donning Procedure	20-4
20-3.	Test Fixture Schematic	20-11
20-4.	Cylinder Thread Count	20-14
20-5.	Deleted	
20-6.	Fabrication of Attachment Pocket	20-22
20-7.	CO_2 Inflation Assembly	20-23
20-8.	LPP-1 and -1A Life Preserver Illustrated Parts Breakdown	20-27
21-1. thru 21-8 Deleted		
22-1.	LPU-31/P Life Preserver Assembly, Parts Nomenclature	22-2
22-2.	Donning Procedure	22-3
22-3.	Test Fixture Schematic	22-9
22-4.	Cylinder Thread Count	22-12
22-5.	Deleted	
22-6.	CO_2 Inflation Assembly	22-20
22-7.	Front and Back Panels	22-23
22-8.	Flat Patterns	22-24
22-9.	Back Panel Assembly (Inside Shown)	22-25
22-10.	Front Panel Assembly (Inside Shown)	22-26
22-11.	Cover Assembly	22-27
22-12.	LPU-31/P Life Preserver Assembly Illustrated Parts Breakdown	22-29
23-1.	Pouch Type Life Preserver Assembly, Parts Nomenclature	23-2
23-2.	Donning Procedure	23-3
23-3.	Test Fixture Schematic	23-9
23-4.	Cylinder Thread Count	23-12

LIST OF ILLUSTRATIONS (Cont)

Figure	Title	Page
23-5.	Deleted	
23-6.	CO_2 Inflation Assembly	23-18
23-7.	Hoisting Strap, Details	23-22
23-8.	Pouch Type Life Preserver Assembly Illustrated Parts Breakdown	23-24
24-1.	LPU-28/P Life Preserver Assembly, Parts Nomenclature	24-2
24-2.	Test Fixture Schematic	24-9
24-3.	Cylinder Thread Count	24-12
24-4.	Deleted	
24-5.	CO_2 Inflation Assembly	24-18
24-6.	Elbow-Oral Inflation Hose	24-20
24-7.	Pressure Relief Valve	24-20
24-8.	LPU-28/P Life Preserver Assembly Illustrated Parts Breakdown	24-26
25-1.	LPU-32/P Life Preserver Assembly, Parts Nomenclature	25-2
25-2.	Donning Procedures	25-4
25-3.	Deleted	
25-4.	Cylinder Thread Count	25-13
25-5.	Deleted	
25-6.	Typical CO_2 Inflation Assembly	25-21
25-7.	LPU-32/P Life Preserver	25-31
26-1.	LPU-21C(V)1/P Life Preserver Assembly	26-2
26-2.	LPU-21C(V)1/P Life Preserver Assembly, Parts Nomenclature	26-3
26-3.	Test Fixture Schematic	26-12
26-4.	Installation of Inflation Valve Protective Cover	26-15
26-5.	Cylinder Thread Count	26-15
26-6.	Deleted	
26-7.	Flare Pouch Repair	26-22
26-8.	CO_2 Inflation Assembly	26-25
26-9.	Addition of Webbing Loops	26-30
26-10.	Fabrication of Locking Pin Cover	26-32
26-11.	Locking Pin Cover Installation	26-33
26-12.	Collar Casing Shoulder Strap Fabrication and Installation	26-34
26-13.	Bladder Attachment Patch Installation Dimensions	26-36
26-14.	Installation Casing Attachment Patch Snap Fastener Studs	26-37
26-15.	Replacement of Flotation Bladder Collar Lobe Snap Fastener Studs	26-38
26-16.	LPU-21C(V)1/P Packing Nomenclature	26-43
26-17.	Packing LPU-21C(V)1/P Life Preserver	26-44
26-18.	LPU-21C(V)1/P Life Preserver Illustrated Parts Breakdown	26-46
27-1.	LPU-23B(V)1/P Life Preserver Assembly	27-2
27-2.	LPU-23B(V)1/P Life Preserver Assembly, Parts Nomenclature	27-3
27-3.	Automatic Inflation Device FLU-8B/P	27-4
27-4.	Lot Numbering System for FLU-8B/P Automatic Inflators	27-11
27-5.	Battery Removal	27-12
27-6.	Test Fixture Schematic	27-16
27-7.	Installation of Inflation Valve Protective Cover	27-19
27-8.	Cylinder Thread Count	27-19
27-9.	Battery Installation Arrangement	27-21

LIST OF ILLUSTRATIONS (Cont)

Figure	Title	Page
27-10.	Deleted	
27-11.	Deleted	
27-12.	Flare Pouch Repair	27-28
27-13.	Packaging Cord Loop Routing	27-35
27-14.	FLU-8B/P Sensor Plug Cap	27-37
27-15.	Addition of Webbing Loops	27-41
27-16.	Fabrication of Locking Pin Cover	27-43
27-17.	Locking Pin Cover Installation	27-44
27-18.	Deleted	
27-19.	Attachment Patch Installation	27-47
27-20.	Installation Casing Attachment Patch Snap Fastener Studs	27-48
27-21.	Deleted	
27-22.	Packing LPU-23B(V)1/P Life Preserver	27-55
27-23.	LPU-23B(V)1/P Life Preserver Assembly Illustrated Parts Breakdown	27-57

LIST OF TABLES

Table	Title	Page
2-1.	Source, Maintenance and Recoverability (SM&R) Code Definitions	2-5
4-1. thru 4-4. Deleted		
5-1.	LPU-34/P Directives	5-3
5-2.	LPU-34/P Common Repairs and Fabrications	5-4
5-3.	Temperature Conversion Chart	5-9
5-4.	Barometric Pressure Conversion Chart	5-10
6-1.	LPU-36/P Directives	6-4
6-2.	LPU-36/P Common Repairs and Fabrications	6-6
6-3.	Temperature Conversion Chart	6-17
6-4.	Barometric Pressure Conversion Chart	6-17
8-1.	LPU-37/P Directives	8-3
8-2.	LPU-37/P Common Repairs and Fabrications	8-4
8-3.	Temperature Conversion Chart	8-9
8-4.	Barometric Pressure Conversion Chart	8-10
13-1. thru 13-6. Deleted		
14-1.	LPU-21/P Series Survival Items	14-5
14-2.	LPU-21/P Series Directives	14-5
14-3.	LPU-21/P Common Repairs and Fabrications	14-6
14-4.	LPU-21/P Series Life Preserver Markings	14-11
14-5.	Temperature Conversion Chart	14-13
14-6.	Barometric Pressure Conversion Chart	14-14
15-1.	LPU-21D/P Survival Items	15-5
15-2.	LPU-21D/P Directives	15-6
15-3.	LPU-21D/P Life Preserver Markings	15-10
15-4.	Temperature Conversion Chart	15-13
15-5.	Barometric Pressure Conversion Chart	15-13
15-6.	LPU-21D/P Common Repairs and Fabrications	15-16
16-1.	LPU-23/P Series Survival Items	16-4
16-2.	LPU-23/P Series Directives	16-5
16-3.	LPU-23/P Series Common Repairs and Fabrications	16-6
16-4.	LPU-23/P Life Preserver Markings	16-14
16-5.	Temperature Conversion Chart	16-17
16-6.	Barometric Pressure Conversion Chart	16-18
17-1.	LPU-27/P22P-7(V) Life Preserver Survival Items	17-4
17-2.	LPU-27/P22P-7(V) Common Repairs and Fabrications	17-5
17-3.	LPU-27/P22P-7(V) Life Preserver Markings	17-11
17-4.	Temperature Conversion Chart	17-13
17-5.	Barometric Pressure Conversion Chart	17-14

LIST OF TABLES (Cont)

Table	Title	Page
18-1.	LPU-23C/P Series Survival Items	18-6
18-2.	LPU-23C/P Common Repairs and Fabrications	18-7
18-3.	LPU-23C/P Life Preserver Markings	18-15
18-4.	Temperature Conversion Chart	18-18
18-5.	Barometric Pressure Conversion Chart	18-18
19-1. thru 19-6. Deleted		
20-1.	LPP-1, -1A Survival Items	20-1
20-2.	LPP-1, -1A Common Repairs and Fabrications	20-5
20-3.	LPP-1 Life Preserver Markings	20-9
20-4.	LPP-1A Life Preserver Markings	20-10
20-5.	Temperature Conversion Chart	20-12
20-6.	Barometric Pressure Conversion Chart	20-13
21-1. thru 21-6. Deleted		
22-1.	LPU-31/P Common Repairs and Fabrications	22-4
22-2.	LPU-31/P Life Preserver Markings	22-8
22-3.	Temperature Conversion Chart	22-10
22-4.	Barometric Pressure Conversion Chart	22-11
22-5.	LPU-31/P Life Preserver Inflation Assembly	22-12
23-1.	Pouch Type Survival Items	23-4
23-2.	Pouch Type Common Repairs and Fabrications	23-4
23-3.	Pouch Type Life Preserver Markings	23-8
23-4.	Temperature Conversion Chart	23-10
23-5.	Barometric Pressure Conversion Chart	23-11
24-1.	LPU-28/P Life Preserver Components	24-3
24-2.	LPU-28/P Directives	24-4
24-3.	LPU-28/P Life Preserver Common Repairs and Fabrications	24-5
24-4.	LPU-28/P Life Preserver Markings	24-8
24-5.	Temperature Conversion Chart	24-10
24-6.	Barometric Pressure Conversion Chart	24-11
25-1.	LPU-32/P Survival Items	25-3
25-2.	LPU-32/P Common Repairs and Fabrications	25-5
25-3.	LPU-32/P Life Preserver Markings	25-9
25-4.	Temperature Conversion Chart	25-11
25-5.	Barometric Pressure Conversion Chart	25-12
26-1.	LPU-21C(V)1/P Survival Items	26-5
26-2.	LPU-21C(V)1/P Common Repairs and Fabrications	26-6
26-3.	LPU-21C(V)1/P Life Preserver Markings	26-11
26-4.	Temperature Conversion Chart	26-13
26-5.	Barometric Pressure Conversion Chart	26-13

LIST OF TABLES (Cont)

Table	Title	Page
27-1.	LPU-23B(V)1/P Survival Items	27-6
27-2.	LPU-23B(V)1/P Common Repairs and Fabrications	27-6
27-3.	LPU-23B(V)1/P Life Preserver Markings	27-15
27-4.	Temperature Conversion Chart	27-17
27-5.	Barometric Pressure Conversion Chart	27-18

THIS PAGE INTENTIONALLY LEFT BLANK.

CHAPTER 1

INTRODUCTION

1-1. GENERAL.

WARNING

Unauthorized modification to, and deviations from prescribed life support and survival equipment by individual aircrewmember could create unknown safety hazards. The OPNAVINST 3710.7 Series specifies minimum requirements for such equipment and is supplemented by the individual model NATOPS.

1-2. OPNAVINST 4790.2 Series identifies NAVAIRSYSCOM as the only authority for modifications to life support and survival equipment, which is usually accomplished by the Fleet Support Team (FST) (formerly Cognizant Field Activity (CFA)) via Aircrew Systems Changes or a change to the equipment procurement package. This manual also permits an operating activity with approval of the controlling custodian, to conditionally modify ONE UNIT of equipment in-service to correct or overcome unsatisfactory conditions in that equipment item. Any other type of deviation/peculiar configuration or modification to life support and survival equipment is disallowed, and the Aircrew Survival Equipmentman has no authority or responsibility to perform them.

1-3. If an omission or conflict should occur between FST documents and NATOPS requirements, or if there is a need for clarification of equipment configuration or if equipment deficiencies are discovered, the applicable FST should be notified. If maintenance deficiencies are discovered, they shall be reported to area type commander in accordance with OPNAVINST 4790.2 Series. The FST for most of the life support and survival equipment is the Naval Air Warfare Center Aircraft Division (NAWCAD) Code 4.6.1.2, NAS Patuxent River, MD 20670-1906. For parachutes and related hardware, including torso harnesses, the FST is the Naval Air Warfare Center Weapons Division, Code 463000D, China Lake, CA 93555. NAWCAD DET Indianapolis, IN 46219 has cognizance over all survival radios and emergency beacons. NSWC, Indian Head, MD is FST for the FLU-8B/P Automatic Inflation Device.

1-4. The Aviation-Crew Systems manual is released under the authority of the Naval Air Systems Command in compliance with the request of the Chief of Naval Operations. The instructions contained herein are mandatory. This manual consists of nine separately bound volumes, as listed below:

TITLE	PUBLICATION NUMBER
Inflatable Survival Equipment (Liferafts)	NAVAIR 13-1-6.1-1
Inflatable Survival Equipment (Life Preservers)	NAVAIR 13-1-6.1-2
Parachutes	NAVAIR 13-1-6.2
Seat Survival Kits (Oxygen Hoses and Non-SKU Seat Kits)	NAVAIR 13-1-6.3-1
Seat Survival Kits (SKU Series Seat Kits)	NAVAIR 13-1-6.3-2
Oxygen Equipment (Aircraft Equipment, Masks, and Other Systems)	NAVAIR 13-1-6.4-1
Oxygen Equipment (Regulators)	NAVAIR 13-1-6.4-2
Oxygen Equipment (Concentrators)	NAVAIR 13-1-6.4-3
Oxygen Equipment (Converters)	NAVAIR 13-1-6.4-4
Rescue and Survival Equipment	NAVAIR 13-1-6.5
Aircrew Personal Protective Equipment (Aircrew/Passenger Equipment)	NAVAIR 13-1-6.7-1
Aircrew Personal Protective Equipment (Clothing)	NAVAIR 13-1-6.7-2
Aircrew Personal Protective Equipment (Helmets and Masks)	NAVAIR 13-1-6.7-3
Aircrew Personal Protective Equipment (Protective Assembly, Aircrew Survival - Armor)	NAVAIR 13-1-6.7-4
Special Missions Aircrew Equipment	NAVAIR 13-1-6.10

1-5. The purpose of each volume is to provide technical information related to the configuration, application, function, inspection and repair of a particular category of aircrew safety and survival equipment. The information contained in each volume is intended for organizational, intermediate and depot levels of maintenance as established within the Naval Aviation Maintenance Program (OPNAVINST 4790.2 Series).

1-6. DESCRIPTION OF NAVAIR 13-1-6.1-2.

1-7. CONTENTS. This volume contains information on configuration, functions, application, inspection, repair and packing of life preserver inflatable survival equipment.

1-8. CONFLICTS AND SUPERSEDURES. These volumes shall take precedence over all other documents except for effective related Aircrew System Changes, Interim Aircrew System Changes and Aircrew System Bulletins. These documents are effective until officially rescinded, canceled or superseded.

1-9. The modifications section of each chapter lists all effective changes and bulletins which affect inflatable survival equipment and have been issued on or before the date of latest change or revision to each volume. When applicable, the subject matter of these documents has been incorporated within the text of the appropriate chapters.

1-10. Effective changes and bulletins which affect inflatable equipment and are issued between changes and revisions to this volume should be recorded in the modification section of the manual for the affected equipment by annotating the outer margin of the page with a vertical line and the number of the change or bulletin. A copy of the change or bulletin should be filed in a separate binder in the ALSS work center. When this volume is updated these documents will be listed in the modification sections of the applicable chapters and the text of the chapters will be updated to reflect the changes and bulletins.

1-11. Appendix A is reserved. Appendix B lists metric system and metric unit conversion charts. Appendix C lists supplies, materials or equipment used in these volumes which are not listed in the IPBs.

1-12. UPDATING. These volumes will be updated periodically by the issuance of a Revision, which is a 100-percent replacement of pages. Between revisions, changes and rapid action changes will be released, which are partial replacements of pages. All added and changed pages shall be incorporated in each volume according to page number. Superseded and deleted pages shall be discarded in accordance with local security procedures for data containing distribution statements. The List of Effective Pages will show the most current change or rapid action change. A summary of the major changed areas for a particular change is located directly beneath the List of Effective Pages.

1-13. TECHNICAL PUBLICATION DEFICIENCY REPORT. Technical publication deficiencies shall be submitted in accordance with OPNAVINST 4790.2 Series.

1-14. ENGINEERING DRAWINGS. Government engineering drawings are available to the fleet by submitting a letter of request to Commanding Officer, Naval Air Technical Data and Engineering Service Command, Naval Air Station North Island, P.O. Box 357031, Building 90 Distribution, San Diego, CA 92135-7031. Each request should include the equipment nomenclature, part number, and CAGE code. The drawings will be provided in the form of aperture cards (Automatic Data Processing Punch Cards). Technical data may also be obtained online at the NATEC website located at http://www.natec.navy.mil. Authorized users must first establish an account prior to obtaining data. Access/account information can be obtained at the NATEC website.

1-15. TECHNICAL DIRECTIVES AND FORMS. NATEC is the central management activity for aeronautical technical publications, engineering drawings and associated technical services. Upon release, NATEC will forward to all designated activities, copies of Technical Directives and Forms. Additional copies are available utilizing the procedures shown in paragraph 1-14 as well as from the PMA-202 website at https://pma202.navair.navy.mil.

1-16. QUALITY ASSURANCE. Quality assurance steps are provided for critical operations. When a step is underlined, the Aircrew Survival Equipmentman shall perform the operation, then have performance verified by a Collateral Duty Inspection (CDI-CDQAR-QAR) as established within the Naval Aviation Maintenance Program (OPNAVINST 4790.2 Series) prior to proceeding to the next operation. In no case shall an Aircrew Survival Equipmentman perform his/her own quality assurance inspection.

1-17. ALLOWANCE LISTING OF INFLATABLE SURVIVAL EQUIPMENT.

1-18. NAVAIR 00-35QH-2 establishes the allowance listing for inflatable survival equipment as applicable. The allowance is generally determined by the number of crewmember seats (stations) aboard the aircraft and the specific duties required for the aircrewmember. A specific spare allowance is provided for extra flight crew requirements, assemblies down for rework, awaiting replacement units and inspection cycle spares. Prior to forwarding to a depot facility, it shall be definitely determined that maintenance cannot be performed at a lower level.

1-19. LEVELS OF MAINTENANCE.

1-20. Inspection, repair and overhaul shall be performed at the established level of maintenance in accordance with and as defined in OPNAVINST 4790.2 Series. In cases of necessity, such as at very small activities, organizational and intermediate levels may be combined within local capabilities. It is recognized that, due to conditions other than those assumed here, minor deviations to procedures outlined in these volumes may be unavoidable.

1-21. SUPPLEMENTARY PUBLICATIONS.

1-22. The following publications supplement these volumes:

1. NAVAIR ALLOWANCE LISTS. List material and equipment (expendable and accountable) authorized for use by various activities. Use Sections A, B, G, H and U as applicable.

2. OPNAV INSTRUCTION 4790.2 Series. The Naval Aviation Maintenance Program.

3. List of Naval Aviation Life Preserver and Liferaft Equipment E0088.

4. OPNAVINST 4410.2A.

5. OPNAV INSTRUCTION 3710.7 provides general instructions on required minimums for aircrew personal protective equipment.

6. NATOPS MANUALS provide instructions on required inflatable survival equipment.

7. Naval Logistics Library (NAVSUP 600).

8. Code of Federal Regulations 49 CFR 71 90 provides information on hydrostatic testing of multiplace liferaft CO_2 cylinders.

9. NAVAIR 13-1-6-8 Aviation Crew Systems Work Unit Code Manual.

10. NAVAIR 01-1A-509 Cleaning and Corrosion Organizational and Intermediate Maintenance.

11. NAVAIR 11-100-1.1 General Use Cartridges and Cartridge Actuated Devices for Aircraft and Unique Aircraft Systems (CADS).

12. NAVSUPINST 4440.128B.

13. NAVSUPINST 4423.29 Series. Naval Material Command (NMC) Uniform Source, Maintenance, and Recoverability (SM&R) Codes.

14. NAVSUP P-719 is a Guide for the Assignment and Use of Source, Maintenance and Recoverability (SM&R) Codes.

1-23. DEFINITIONS.

1-24. The following is a list of definitions used in this volume:

WARNING

Indicates danger to personnel. The warning precedes the item to which it refers.

CAUTION

Indicates danger to the equipment. The caution precedes the item to which it refers.

NOTE

An information item. The note may precede or follow the item to which it refers.

THIS PAGE INTENTIONALLY LEFT BLANK.

CHAPTER 2

MAINTENANCE CONCEPTS, SCHEDULING AND DOCUMENTATION

Section 2-1. Maintenance Concepts

2-1. GENERAL.

2-2. NAVAL AVIATION MAINTENANCE PROGRAM. All maintenance and inspection actions upon Aviation Life Support Systems (ALSS) equipment shall be made as part of the Naval Aviation Maintenance Program in accordance with OPNAVINST 4790.2 Series.

2-3. LEVELS OF MAINTENANCE. Maintenance of ALSS equipment shall be performed at the established level of maintenance in accordance with OPNAVINST 4790.2 Series.

2-4. QUALIFIED PERSONNEL. Refer to OPNAVINST 4790.2 Series for qualifications of personnel authorized to perform maintenance actions on ALSS equipment.

Section 2-2. Maintenance Scheduling

2-5. GENERAL.

2-6. INSPECTION CYCLES. Scheduled maintenance requirements for aircraft and man-mounted equipment are published in the applicable aircraft maintenance requirement cards and this manual.

NOTE

To meet unusual situations and facilitate workload scheduling, refer to OPNAVINST 4790.2 Series for authorized deviations to scheduled phase inspection intervals.

Section 2-2A. Accident Evaluation

2-6A. AIRCRAFT ACCIDENT REPORT INSPECTION.

2-6B. Any Aviation Life Support System Equipment along with related subassemblies or equipment which have been recovered following use in an emergency ditching/bailout or ejection (refer to NAVAIR 13-1-6.2 for personnel and drogue parachutes) will be returned to the nearest Naval Supply Activity for shipment via traceable means to: Code 4.6.3.3, Naval Air Warfare Center Aircraft Division, Bldg 2187, 48110 Shaw Rd., Unit 5, Patuxent River, MD 20670-1906.

NOTE

Under no circumstances will any piece of Aviation Life Support System equipment which has been subjected to ditching/bailout or ejection be returned to service.

2-6C. Stencil outside of container in 1-in. letters as follows: THIS EQUIPMENT HAS BEEN USED IN AN EMERGENCY. These items of equipment are required for evaluation and determination of design deficiency and to establish requirements for product improvement.

Section 2-3. Maintenance Documents

2-7. GENERAL.

2-8. DOCUMENTING MAINTENANCE ACTIONS. Upon completion of any maintenance action (e.g., inspections, repairs, modifications), appropriate entries shall be made on applicable maintenance records, in accordance with OPNAVINST 4790.2 Series. The entries by the Aircrew Survival Equipmentman shall provide a systematic record of equipment history and the documentation of all maintenance actions performed on the equipment.

NOTE

The 28th In-Service Management Panel meeting for Aviation Life Support Systems rescinded the requirement for the packer to sign the Inspection Record patch on life preservers. The requirement for all other documentation remains unchanged. The reason for this change is that most history patches are unreadable and the packer's and inspector's names are documented on Aviation Crew Systems Records.

2-9. MAINTENANCE DOCUMENTS. Refer to OPNAVINST 4790.2 Series for documents used to record history or to document maintenance actions or for additional information for completion of maintenance records. These records are designed to provide continuous configuration and inspection records throughout the service life of ALSS assemblies and their components.

Section 2-4. Illustrated Parts Breakdown Information

2-10. GENERAL.

2-11. This section explains the Illustrated Parts Breakdown (IPB) for ALSS equipment. The IPB can be found at the end of each chapter where applicable. The IPB should be used during maintenance when requisitioning and identifying parts.

2-12. SYMBOLS AND ABBREVIATIONS. Symbols and abbreviations used in the Illustrated Parts Breakdown are as follows:

Symbol	Definition
---*---	Closure (end) of attaching parts
#	Selected part, only one used
x	By (used in dimensions 12 in. x 6 in.)
&	And
Abbreviation	Definition
AR or A/R	As Required
CAGE	Commercial and Government Entity
COML	Commercially available
FIG, Fig	Figure
GAPL	Group Assembly Parts List
GFE	Government Furnished Equipment
IPB	Illustrated Parts Breakdown
L.H.	Left Hand
MAINT	Maintenance
NHA	Next Higher Assembly
No.	Number
RECOVER, RECY	Recoverability
REF	Reference
R.H.	Right Hand
SM&R	Source, Maintenance and Recoverability
Spec. Cont. Dwg. or SCD	Specification Control Drawing

2-13. GROUP ASSEMBLY PARTS LIST.

2-14. The Group Assembly Parts List (GAPL) contains illustrations and parts lists for each major assembly. These illustrations and accompanying lists show how the major assemblies are disassembled into subassemblies and detail parts. Each item illustrated is indexed for identification purposes. Each illustration is accompanied by a parts list providing a part number, description, and quantity for each item. The list is arranged in disassembly order. Through the use of a system of indentation, the relationship of the detail parts to the subassemblies and the relationship of the subassemblies to the main assembly, is shown.

2-15. FIGURE AND INDEX NUMBER COLUMN. The figure and index number of each item shown on the corresponding illustration appears in the Figure and Index Number Column, with the exception of assemblies and subassemblies which are not illustrated in assembled form. In these cases, the assemblies or subassemblies are listed but not indexed. The component parts thereof are both listed and indexed.

2-16. PART NUMBER COLUMN. This column contains the contractor's drawing number, government standard number, vendor drawing number or identifies the part as being commercial hardware (COML). Government standard parts are listed using the applicable MS, AN, AF, NAS, MIL, or JAN part number. Where the part number is controlled by a military specification, this specification number is listed in the Description Column.

2-17. DESCRIPTION COLUMN. This column lists the item name plus those modifiers necessary to identify the item. The description of a vendor-supplied item includes a five-digit number which identifies the manufacturer. This is the Commercial and Government Entity (CAGE) code. To correlate this CAGE code to the manufacturer's name, refer to the cataloging handbook H4/H8. CAGE codes may be omitted for prime manufacturer's parts and for government standard parts. When applicable, contractor's control drawing numbers and reference designations of electronic parts are also listed for general reference. When a separate exploded view is used to show the detail parts of an assembly or subassembly the Description Column contains an appropriate figure cross-reference in parenthesis following the description. This cross-reference appears both in the listing where the assembly is first described, and in the listing which the assembly is broken down. In the latter case, the abbreviation REF will appear in the Units Per Assembly column. Commercial hardware items (COML) are fully described so that they may be procured from normal commercial sources. Parts stocked in kits are identified with kit component code in this column, i.e., KD.

2-18. Indentation. The indentations headed "1" through "7" in the Description Column are provided to show the relationship of assemblies and their detail parts. The detail parts are indented one space to the right and listed below the assembly to which they belong. Determine the next higher assembly (NHA) of any detail part by locating, in the next space to the left (excluding attaching parts) the first item above the detailed part.

```
1 2 3 4 5 6 7

ARTICLE (or MAIN ASSEMBLY)
. Detailed parts for ARTICLE (or MAIN ASSEMBLY)
. ASSEMBLY
    (ATTACHING PARTS)
. ATTACHING PARTS FOR ASSEMBLY
    ---*---
. . Detailed parts for ASSEMBLY
. . SUBASSEMBLY
      (ATTACHING PARTS)
. . ATTACHING PARTS FOR SUBASSEMBLY
      ---*---
. . . Detailed parts for SUBASSEMBLY
. . . SUB-SUBASSEMBLY
        (ATTACHING PARTS)
. . . ATTACHING PARTS FOR
        SUB-SUBASSEMBLY
        ---*---
. . . . Detailed parts for SUB-SUBASSEMBLY
```

2-19. Attaching Parts. Attaching parts are items used to attach parts or assemblies to each other and follow immediately after the part to be attached. The attaching parts have the same indentation as the part attached. The caption "(ATTACHING PARTS)" is placed on the line immediately above the listing of attaching parts. The separation symbol ---*--- appears on the line immediately under the last attaching part. Quantities of attaching parts are listed per unit. For example, if two fittings are required for each assembly and one bolt is required to attach each fitting, the correct listing would be:

```
. FITTING ASSEMBLY, Hinge ..................... 2
    (ATTACHING PARTS)
. BOLT ......................................... 1
    ---*---
```

2-20. UNITS PER ASSEMBLY COLUMN. This column shows the quantity of an item required in the next higher assembly. The abbreviation AR indicates when the quantity is "As Required".

2-21. USABLE ON CODE COLUMN. Usable on codes are used to indicate part usage where various models and serial numbers of the equipment or similar parts within the equipment use different parts. A code is assigned to each variation of the equipment and entered into the GAPL when a part is used only in a specified variation. Where no code is entered, the part is used on all units covered by the GAPL or when no variations from the original equipment exist.

2-22. NUMERICAL INDEX.

2-23. The numerical index which follows each GAPL contains all the part numbers listed in that GAPL, arranged in alphabetical-numerical sequence.

2-24. PART NUMBER COLUMN. This column contains the part numbers of the parts and assemblies. Part number arrangement starts at the extreme left-hand position and continues left to right, one position at a time, according to the following order or precedence:

Space	(blank column)
Diagonal	(Slant)
Point	(period)
Dash	(hyphen)
Letters	A through Z
Numerals	0 through 9

NOTE

Spaces, diagonals, points, and dashes do not appear in the extreme left-hand position of the part numbers. However, they may be used in the second and succeeding positions and take precedence over letters and numbers as indicated above.

2-25. FIGURE AND INDEX NUMBER COLUMN. In this column, the digits preceding the dash refer to the figure in which the parts are illustrated. The digits following the dash are the index numbers.

2-26. SOURCE, MAINTENANCE AND RECOVERABILITY (SM&R) CODE COLUMN. The five digit SM&R codes, assigned by Naval Air Systems Command Representatives are reflected in the SM&R code column. The code format is composed of three parts consisting of a two-position Source Code, a two-position Maintenance Code and a one-position Recoverability Code. See Table 2-1 for basic information.

NOTE

For more complete information on Uniform SM&R Codes, refer to NAVSUPINST 4423.29, OPNAVINST 4410.2A, and NAVSUP P-719.

Table 2-1. Source, Maintenance, and Recoverability (SM&R) Code Definitions

SOURCE			MAINTENANCE			
1st POS	2nd POSITION		3rd POSITION		4th POSITION	
MEANS OF ACQUIRING SUPPORT			USE: LOWEST LEVEL AUTHORIZED TO REMOVE/ REPLACE THE ITEM.		REPAIR: LOWEST LEVEL WITH CAPABILITY AND RESOURCES TO PERFORM COMPLETE REPAIR ACTION.	
P	A	ITEM: STOCKED	O	ORG/UNIT	O	ORG/UNIT
	B	ITEM: STOCKED, INSURANCE				
	C	ITEM: STOCKED, DETERIORATIVE				
	D	ITEM: SUPPORT, INITIAL ISSUE OF OUTFITTING & STOCK ONLY FOR ADDITIONAL INITIAL ISSUE	2 3 4 5 6	MINESWEEPER SUBMARINES AUX/AMPHIB DESTROYER, FFG CRUISER/CARRIER	2 3 4 5 6	MINESWEEPER SUBMARINES AUX/AMPHIB DESTROYER, FFG CRUISER/CARRIER
	E	EQUIPMENT: SUPPORT, STOCKED FOR INITIAL ISSUE OR OUTFITTING OF SPECIFIED MAINTENANCE ACTIVITIES				
	F	EQUIPMENT: SUPPORT, NONSTOCKED, CENTRALLY PROCURED ON DEMAND	F	I/AFLOAT	F	I/AFLOAT
	G	ITEM: STOCKED FOR SUSTAINED SUPPORT. UNECONOMICAL TO PRODUCE AT A LATER TIME				
	H	ITEM: STOCKED, CONTAINS HAZMAT. HMIS/MSDS REPORTING REQUIRED	G	ASHORE AND AFLOAT	G	ASHORE AND AFLOAT
	R	TERMINAL OR OBSOLETE, REPLACED				
	Z	TERMINAL OR OBSOLETE, NOT REPLACED				
K	D	ITEM: DEPOT O/H & MAINTENANCE KITS	H	I/ASHORE	H	I/ASHORE
	F	ITEM: MAINTENANCE KIT, PLACE AT O, F, H, L				
	B	ITEM: IN BOTH DEPOT REPAIR AND MAINT. KITS				
M	O	MFR OR FAB AT UNIT LEVEL				
	F	MFR OR FAB AT INTERMEDIATE/DS LEVEL	K	CONTRACTOR FACILITY	K	CONTRACTOR FACILITY
	H	MFR OR FAB AT INTERMEDIATE/GS LEVEL				
	L	MFR OR FAB AT SPECIALIZED REPAIR ACTIVITY (SRA)				
	G	MFR OR FAB AT ASSEMBLED AFLOAT OR ASHORE				
	D	MFR OR FAB AT DEPOT MAINTENANCE LEVEL	L	INTERMEDIATE SRA	L	INTERMEDIATE SRA
A	O	ITEM: ASSEMBLED AT ORG/UNIT				
	F	ITEM: ASSEMBLED AT INTERMEDIATE LEVEL - AFLOAT				
	H	ITEM: ASSEMBLED AT INTERMEDIATE LEVEL - ASHORE	D	DEPOT	D	DEPOT
	L	ITEM: ASSEMBLED AT SRA				
	G	ITEM: ASSEMBLED AFLOAT OR ASHORE				
	D	ITEM: ASSEMBLED AT DEPOT MAINTENANCE LEVEL				
X	A	ITEM: REQUISITION NEXT HIGHER ASSEMBLY			Z	NON-REPAIRABLE
	B	ITEM: NOT PROCURED OR STOCKED, AVAILABLE THRU SALVAGE, REQ. BY CAGE/PART NUMBER	Z	REF ONLY		
	C	INSTALLATION DRAWING, DIAGRAM, INSTRUCTION SHEET, IDENTIFY BY CAGE/PART NUMBER			B	RECONDITION
	D	NON-STOCKED, OBTAIN VIA LOCAL PURCHASE				

RECOVERABILITY		SERVICE OPTION CODE	
5th POSITION		6th POSITION	
DISPOSITION: WHEN UNSERVICEABLE OR UNECONOMICALLY REPAIRABLE, CONDEMN OR DISPOSE.		ASSIGNED TO SUPPORT ITEMS TO CONVEY SPECIFIC INFORMATION TO THE SERVICE'S LOGISTICS COMMUNITY/OPERATING FORCES.	
O	ORG/UNIT	1	I-LEVEL 1ST DEGREE
F	I/AFLOAT	2	I-LEVEL 2ND DEGREE
G	ASHORE AND AFLOAT	3	I-LEVEL 3RD DEGREE
H	I/ASHORE	6	COMMERCIAL ITEM, ORGANICALLY MFR'D
K	DLR; CONTRACTOR FACILITY	8	NON-CONSUMABLE; 2ND DEGREE ENGINE I-LEVEL
		9	NON-CONSUMABLE; 3RD DEGREE ENGINE I-LEVEL
L	INTERMEDIATE SRA LEVEL	E	END TO END TEST
		J	INTER-SERVICE DLR REPAIRABLE BELOW D-LEVEL
D	DLR; CONDEMN OR DISPOSE AT DEPOT	P	PROGRESSIVE MAINTENANCE
Z	NON-REPAIRABLE	R	GOLD DISC REPAIR
A	NON-REPAIRABLE BUT REQUIRES SPECIAL HANDLING	T	TRAINING DEVICES

THIS PAGE INTENTIONALLY LEFT BLANK.

CHAPTER 3

LIFE PRESERVER SPECIAL TOOLS AND SUPPORT EQUIPMENT

Section 3-1. Description

3-1. GENERAL.

3-2. This chapter lists special support equipment required for the testing and inspection of life preservers. An assembly and parts breakdown is included with each item of support equipment. See Section 3-3.

Section 3-2. Life Preserver Support Equipment

3-3. LEAK TEST FIXTURE.

3-4. A life preserver leak test fixture may be fabricated to meet the requirements of the schematic shown in figure 3-1. A suggested leak test fixture, consisting of three-way valve, pressure gage, and adapters for connection to a source of low-pressure air and to the life preserver, is shown in figure 3-3.

WARNING

Care shall be taken at all times when working with or handling pressurized air (high or low), carbon dioxide cylinders (all sizes), or associated equipment.

CAUTION

If three-way valve is not used, measuring device valve must be closed when air feed valve is open.

Damage may occur to oral inflation valves if air supply pressure entering the life preserver exceeds ten (10) psi during leak tests.

NOTE

If suitable air source is not available, water-pumped nitrogen (BB-N-411) may be substituted.

3-4A. TEMPERATURE AND BAROMETRIC PRESSURE GAGES.

3-4B. The temperature and barometric pressure must be recorded when performing leakage tests on life preservers. Should existing gages need to be replaced the equipment listed below is authorized for use. Calibration of this equipment is not required.

1. Certified thermo-hygrometer (P/N 5033) provides temperature and relative humidity, wall mounted.

2. Marine barometer (P/N M111) provides barometric pressure, wall mounted.

3. Outdoor weather computer, hand held, digital display provides temperature and barometric pressure. Pressure provided in bar graph trends for 12 hours and pressure history for 24 hours in 2 hour increments. Calendar/clock functions are included.

4. Above items must be ordered open purchase from:

American Weather Enterprises
P.O. Box 14381
San Francisco, CA 94114
Phone (800) 293-2555

3-5. PNEUMATIC INFLATOR VALVE (CHECK VALVE) CORE TOOL.

3-6. A pneumatic inflator valve (check valve) core tool, part number 8769A or equivalent (CAGE 27783), can also be fabricated as described here. See figure 3-2.

1. Use 3/16-inch diameter solid brass or aluminum rod, approximately 5 inches long.

2. Fabricate as shown in figure 3-2.

3. There is no IPB or Numerical Index for this tool.

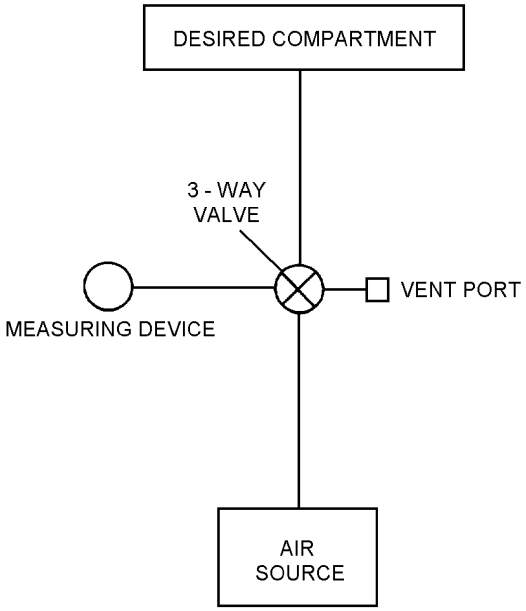

10030001

Figure 3-1. Leak Test Fixture Schematic

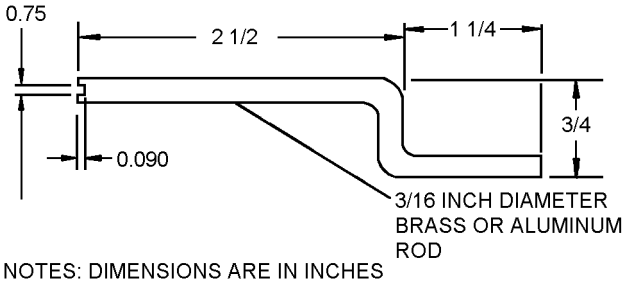

10030002

Figure 3-2. Core Tool

Section 3-3. Illustrated Parts Breakdown (IPB)

3-7. GENERAL.

3-8. This section lists and illustrates the assemblies and detail parts of the Special Tools and Support Equipment for Life Preservers.

3-9. The Illustrated Parts Breakdown should be used during maintenance when requisitioning and identifying parts.

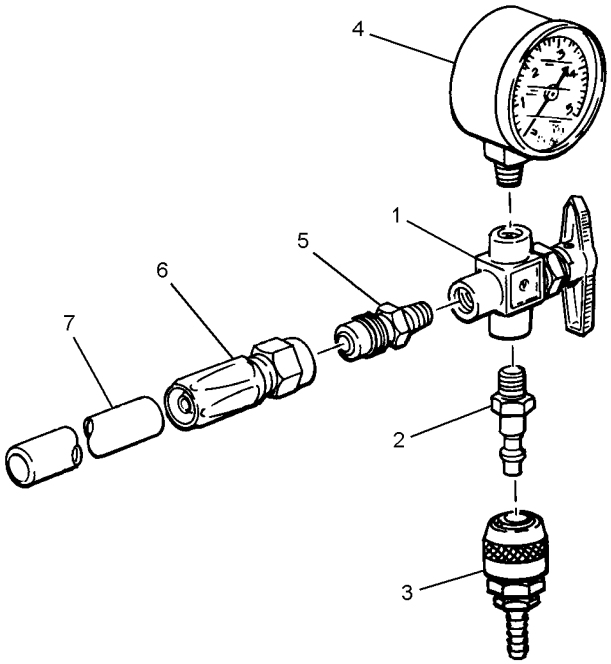

10030003

Figure 3-3. Leak Test Fixture - Life Preserver

Figure and Index Number	Part Number	Description 1 2 3 4 5 6 7	Units Per Assembly	Usable On Code
3-3	No Number	LEAKAGE TEST FIXTURE, ... LIFE PRESERVER	REF	
-1	B-43XF4	. VALVE, 3-way with vent (12623) . . . . . . (SEE NOTE 1)	1	
-2	MIL-C-4109	. COUPLING, air hose (male) . . . . . . (SEE NOTE 2)	1	
-3	MIL-C-4109	. COUPLING, air hose (female) . . . . . . (SEE NOTE 2)	1	
-4	P-734	. GAGE, Pressure, 0 to 5 psig . . . . . . (SEE NOTE 3)	1	
	40R31-2	. GAGE, Pressure, 0 to 15 psig . . . . . . (SEE NOTE 4)	1	
	CC-TM-12	. MANOMETER, Mercury, calibrated 0 to 6 . . . . . . psig (75331)	1	
-5	AN816-4-8D	. REDUCER, 3/4-inch tubing to 1/2-inch pipe	1	
-6	MS27404-8D	. FITTING, Hose 1		
-7	No Number	. HOSE, Rubber, 1/2-inch ID 3/4-inch OD	A/R	
	NOTE: 1. NIIN 01-014-2696 2. Select quick-disconnect coupling compatible with low pressure air installation. 3. NIIN 00-087-3143 4. NIIN 00-942-8127			

NUMERICAL INDEX

Part Number	Figure and Index Number	SM&R Code
AN816-4-8D	3-3-5	
B-43XF4	3-3-1	
CC-TM-12	3-3-4	
MIL-C-4109	3-3-2	
MIL-C-4109	3-3-3	
MS27404-8D	3-3-6	
P-734	3-3-4	
40R31-2	3-3-4	

CHAPTER 4

DELETED

THIS PAGE INTENTIONALLY LEFT BLANK.

CHAPTER 5

LIFE PRESERVER, LOW-PROFILE FLOATATION COLLAR, LPU-34/P

Section 5-1. Description

5-1. GENERAL.

5-2. The LPU-34/P Life Preserver, Low Profile Floatation Collar (LPFC), is equipped with two manually operated inflation devices. The LPU-34/P is designed as a constant wear item for use with compatible flight clothing and other crew equipment. It weighs 3 1/4 pounds and provides a minimum of 65 pounds of buoyancy. It has a zipper (slide fastener) the same color as the exterior cover to aid in distinguishing it from the LPU-33/P. The LPU-33/P has a black zipper and is equipped with automatic inflation devices.

NOTE

The CFA for LPFC (LPU-34/P) is Naval Air Warfare Center Aircraft Division, Patuxent River, MD 20670.

5-3. CONFIGURATION.

5-4. The LPU-34/P consists of an exterior cover assembly (casing assembly), inflation shell assembly, and a flotation assembly. The flotation assembly consists of two independent inflatable assemblies (bladders) each of which is equipped with a manual inflation device and an oral inflation valve. The bladders are packed in a black cloth inflation shell assembly. Four straps on the inflation shell assembly pass through grommets on the exterior cover assembly to attach the LPU-34/P to the survival vest. A beaded handle which connects by lanyard to an inflation device is mounted on each side of the exterior cover to initiate inflation of the life preserver. Two additional straps adjust a plastic buckle which snaps across the wearer's chest to help keep the LPU-34/P in position when worn.

5-5. INFLATION SHELL ASSEMBLY. The black cloth inflation shell assembly contains the two inflatable bladders. The design of the shell assembly provides the shape for the flotation collar. There are openings in the shell assembly through which the inflation valve stem and oral inflation tube of each bladder extend. A manual inflation device is secured to each valve stem by a cap nut which also serves as a cap for the valve stem. When installed each inflation device and its CO_2 cylinder are wrapped in a protective cover. The oral inflation valve tubes, which are provided as backup to CO_2 cylinder inflation, are retained by inserting the top of each tube in retainer loops attached to the inflation shell assembly.

5-6. APPLICATION.

5-7. The LPU-34/P LPFC is designated for use by aircrew personnel operating aircraft which are not equipped with ejection seat systems. It is designed for constant wear when wearing compatible flight clothing.

5-8. FUNCTION.

5-9. The LPU-34/P is inflated by pulling the beaded handles in a natural downward motion. Each beaded handle is connected by a lanyard to the actuating lever of an inflation device. Pulling the handles initiates zipper separation on the exterior cover and causes the CO_2 cylinder to be punctured, inflating the bladders. The zipper on the exterior cover continues to separate as the bladders inflate to provide head-out-of-water buoyancy.

5-10. In an emergency situation, the oral inflation tubes may be used to top off the inflated bladders, maintain inflation in a leaky bladder, or inflate a bladder if an inflation device malfunctions. The oral inflation tube may also be used to inflate the bladders during an inspection test or to evacuate air to perform packing.

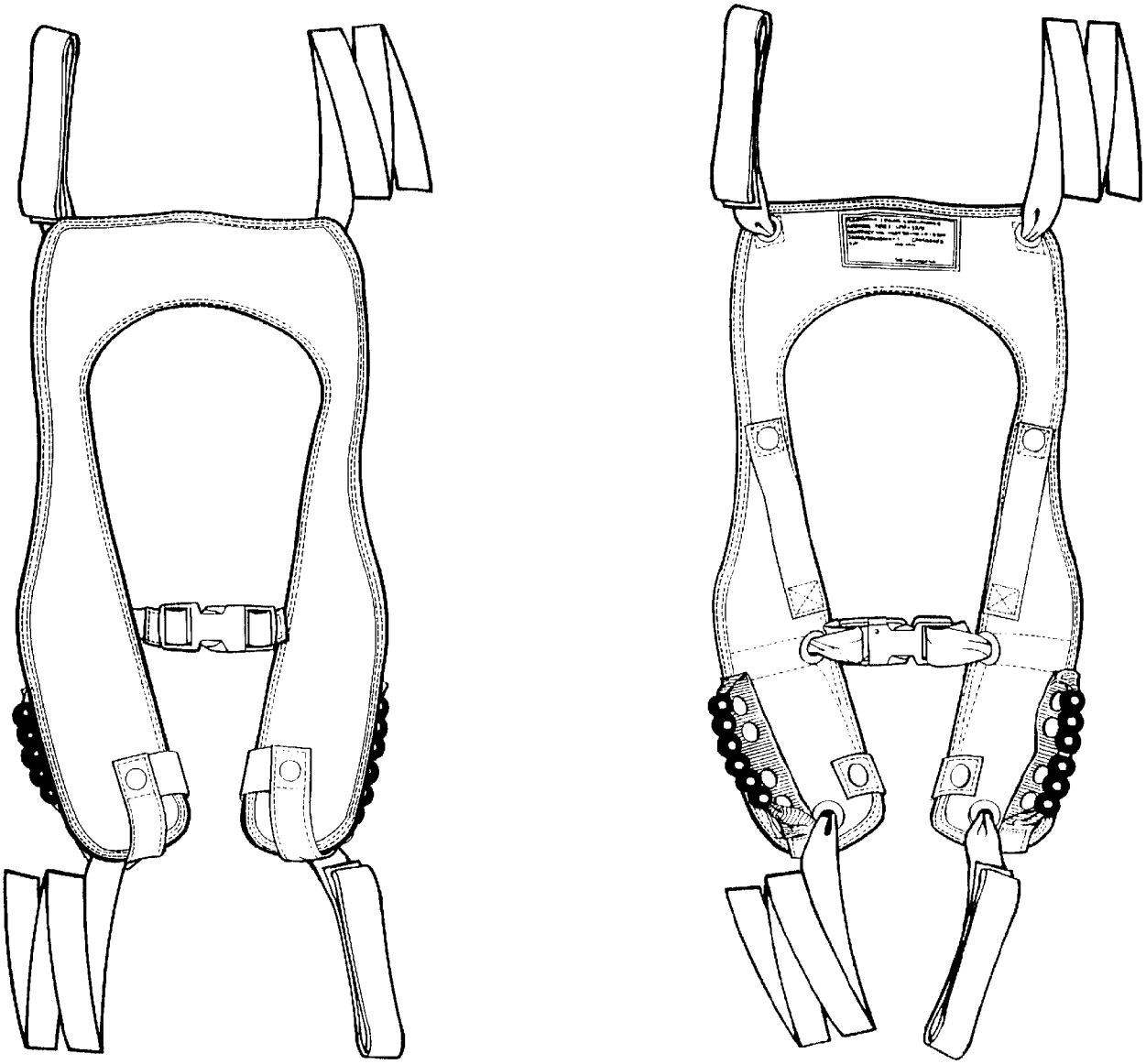

612-83

Figure 5-1. LPU-34/P, Life Preserver, Low Profile Floatation Collar (LPFC)

NOTE

The exterior cover must be manually opened prior to attempting to inflate the bladders using the oral inflation tubes.

Section 5-2. Modifications

5-11. GENERAL.

5-12. The LPU-34/P Series Life Preserver Assembly shall be upgraded by comparing the configuration of the assembly with the modifications listed in table 5-1.

Table 5-1. LPU-34/P Directives

Description of Modification	Application	Modification Code
Replace Left and Right Beaded Handles	All LPU-34/P Life Preservers	66-664

Section 5-3. Maintenance

5-13. GENERAL.

5-14. This section contains information on LPU-34/P inspection, testing, cleaning, servicing, packing, and repair/replacement. Refer to table 5-2 for listing of repair/replacement actions.

5-15. INSPECTION.

5-16. The inspection requirements for the LPU-34/P Life Preserver shall include Preflight/Postflight, 360-Day Special, and Place-In-Service inspections.

5-17. The Preflight/Postflight Inspection shall be performed prior to and after each flight by the aircrewmember to whom the life preserver is assigned.

5-18. The 360-Day Special Inspection shall be performed once every 360 days after the LPU-34/P has been placed in service. The 360-Day Special Inspection shall be performed by qualified personnel at the Intermediate level of maintenance. The Functional Test shall be performed during every 360-Day Special Inspection.

5-19. The Place-In-Service Inspection shall be performed on all life preservers prior to placing in service. The Place-In-Service Inspection shall be performed by qualified personnel at the intermediate level of maintenance. If inspection indicates required repair is beyond the capability of maintenance, complete appropriate forms in accordance with OPNAVINST 4790.2 Series and forward entire assembly to supply.

5-20. QUALITY ASSURANCE. The more critical procedures in this chapter are underlined to designate steps which require a Quality Assurance Inspection to assure performance of specific requirements. After the underlined step is performed by the Aircrew Survival Equipmentman, the procedure shall be verified before the next step is performed. This verification shall be performed by a Collateral Duty Inspector or Quality Assurance Representative (CDI, CDQAR, or QAR). Under no circumstances shall an Aircrew Survival Equipmentman perform his own Quality Assurance Inspection.

5-21. PREFLIGHT/POSTFLIGHT INSPECTION. The Preflight/Postflight Inspection shall be performed at the organizational level prior to and after each flight by the aircrewmember to whom the life preserver is assigned as follows:

WARNING

Ensure that the beaded inflation handles are readily accessible. Beaded inflation handles shall be secured with six snap fasteners.

CAUTION

Do not open any sealed or safety-tied portion of the life preserver for Preflight Inspection.

1. Inspect exterior cover for cuts, tears, deterioration, abrasions, stains, cleanliness, security of stitching, and other signs of damage.

2. Inspect snaps for secure attachment, corrosion, and ease of operation.

3. Deleted

4. Inspect zipper closing for security throughout its length.

5. Inspect plastic buckles and buckle straps for proper operation and security. Buckles may be replaced without removing the life preserver from service.

6. Inspect identification and warning labels for secure attachment.

7. If any discrepancy is noted, the life preserver shall be returned to the Aviator's Equipment Branch for determination of maintenance action and disposition.

5-22. 360-DAY SPECIAL INSPECTION. The 360-Day Special Inspection consists of the following:

1. Preflight Inspection (LPU-34/P) (paragraph 5-21).

1A. Inflation Shell Assembly Visual Inspection (paragraph 5-24).

1B. Exterior Cover Assembly Visual Inspection (paragraph 5-25).

2. Functional Test every 360-Day Special Inspection cycle (paragraph 5-32).

3. Deflation (paragraph 5-35).

4. Leakage Test (paragraph 5-33).

5. Markings Inspection (paragraph 5-26).

6. Manual Inflation Device Inspection (paragraph 5-28).

7. Installation of CO_2 Cylinders (paragraph 5-30).

7A. Bladder Visual Inspection (paragraph 5-27).

8. Packing Procedures (paragraph 5-37).

9. Beaded Inflation Handle Pull Test (paragraph 5-34).

Table 5-2. LPU-34/P Common Repairs and Fabrications

Description	Paragraph Number
Replacement of pull the dot snap fasteners, attachment strap and exterior cover	5-29A
Replacement of snap fasteners, beaded handle assembly and exterior cover	5-29B

5-23. PLACE-IN-SERVICE INSPECTION. The Place-In-Service Inspection shall consist of the following tasks.

1. 360-Day Special Inspection (paragraph 5-22).

2. Functional Test (paragraph 5-32).

3. Bladder Visual Inspection (paragraph 5-27).

4. Inflation Shell Assembly Visual Inspection (paragraph 5-24).

5. Exterior Cover Assembly Visual Inspection (paragraph 5-25).

5-24. INFLATION SHELL ASSEMBLY VISUAL INSPECTION. To inspect the inflation shell assembly, proceed as follows:

1. Inspect fabric for cuts, tears, deterioration, abrasion, stains, and general cleanliness. If required, clean in accordance with paragraph 5-39.

2. Inspect seams, stitching, and reinforcement patches for condition and security.

3. Inspect zipper for security, stitching, and proper operation.

4. Inspect straps and loops for security and wear.

5. Inspect inflator covers for condition and security of hook and pile tape. Replace as required.

6. Inspect buckle for condition and proper operation. Replace if required.

7. If any component except the buckle or inflation covers is unserviceable, replace entire inflation shell assembly.

5-25. EXTERIOR COVER ASSEMBLY VISUAL INSPECTION. To inspect the exterior cover, proceed as follows:

1. Inspect fabric for cuts, tears, deterioration, abrasion, stains, and general cleanliness. If required, clean in accordance with paragraph 5-39.

2. Inspect seams and stitching for condition and security.

3. Inspect zipper for security, stitching, and proper operation.

4. Inspect snaps for security of attachment, corrosion, damage, wear, and ease of operation.

5. Inspect uni-directional snap fastener assemblies for presence, security of attachment, proper orientation, ease of operation, corrosion, and wear.

NOTE

All uni-directional snap fasteners shall be installed with the dot on the button of the snap fastener socket positioned on the side of the snap fastener to which lift must be applied to disengage the socket from the snap fastener stud.

The two snap fasteners on the exterior cover shall be installed with the dot on each socket button positioned away from the sewn strap attachment.

6. Inspect grommets for security, corrosion, damage, and wear.

7. Inspect identification label for security.

8. If any component is unserviceable, replace entire exterior cover.

5-26. MARKINGS INSPECTION. To inspect and restore marking, proceed as follows:

Materials Required

Quantity	Description	Reference Number
As Required	Ink, Marking, Laundry, Black	SPE-92 NIIN 00-161-4229
	-or-	
As Required	Ink, Drawing, Waterproof, Yellow	A-A-59291 NIIN 00-634-6583

1. Compare markings on preserver to those listed in figure 5-2.

2. Restore faded markings as close to original position as possible.

NOTE

THE 28TH IN-SERVICE MANAGEMENT PANEL MEETING FOR AVIATION LIFE SUPPORT SYSTEMS RESCINDED THE REQUIREMENT FOR THE PACKER TO SIGN THE INSPECTION RECORD PATCH ON LIFE PRESERVERS. THE REQUIREMENT FOR ALL OTHER DOCUMENTATION REMAINS UNCHANGED. THE REASON FOR THIS CHANGE IS THAT MOST HISTORY PATCHES ARE UNREADABLE AND THE PACKER'S AND INSPECTOR'S NAMES ARE DOCUMENTED ON AVIATION CREW SYSTEMS RECORDS.

FLOATATION COLLAR, LOW-PROFILE
AIRCREW, TYPE I, LPU-34/P
CONTRACT NO:
CAGE:
S/N: MFG. DATE:

612-84

Figure 5-2. LPU-34/P Markings

5-27. BLADDER VISUAL INSPECTION. To inspect bladders, proceed as follows:

1. Inspect bladders for cleanliness, cuts, tears, punctures, deterioration and abrasions.

2. Check all seams for security.

3. Inspect valve stems for security, cross threading, and cleanliness.

4. Inspect oral inflation valves for cracks, security, ease of operation, and corrosion.

5. If any component of the bladder is unserviceable, replace entire bladder.

5-28. INSPECTION, MANUAL INFLATION DEVICE. Inspection of the Manual Inflation Device is performed as follows:

1. Remove CO_2 cylinder from inflation device.

2. Examine inflation device and actuating lever for corrosion, security, stripped threads, CO_2 cylinder piercing pin for serviceability, and general condition.

a. If CO_2 cylinder piercing pin point is flat, rounded, or otherwise dull or damaged, the inflation device shall be replaced.

3. Check seat seal gasket for condition. Replace if necessary.

4. Operate actuating lever several times. Ensure lever moves freely and piercing pin moves properly inside valve body.

5-29. REPAIR/REPLACEMENT.

5-29A. REPLACEMENT OF THE PULL THE DOT SNAP FASTENERS, EXTERIOR COVER ASSEMBLY AND ATTACHMENT STRAP. To replace pull the dot snap fasteners used to secure the attachment straps to the exterior cover proceed as follows:

Materials Required

Quantity	Description	Reference Number
As Required	Cap, Snap Fastener	MS27983-1 NIIN 00-891-9073
As Required	Socket, Snap Fastener	MS27983-2 NIIN 00-945-2577
As Required	Stud, Snap Fastener	MS27983-3 NIIN 00-276-4908
As Required	Eyelet, Snap Fastener	MS27983-4 NIIN 00-276-4978

1. Remove damaged fastener from cover or attachment strap, using care not to damage cover or webbing.

NOTE

Exterior cover assembly shall be replaced if structural damage occurs during fastener removal or is found after fastener removal.

2. Install new fasteners at existing location as required, ensure pull the dot is installed facing up, nearest top of collar.

5-29B. REPLACEMENT OF SNAP FASTENERS, BEADED HANDLE ASSEMBLY AND EXTERIOR COVER. To replace snap fasteners used to secure the beaded handle assembly to the exterior cover assembly proceed as follows:

Materials Required

Quantity	Description	Reference Number
As Required	Cap, Snap Fastener	MS27981-1B NIIN 00-276-4954
As Required	Socket, Snap Fastener	MS27981-3B NIIN 00-276-4966
As Required	Stud, Snap Fastener	MS27981-4B NIIN 00-901-9660
As Required	Post, Snap Fastener	MS27981-5B NIIN 00-250-6858

1. Remove damaged fastener from cover or beaded handle assembly, using care not to damage cover or handle webbing.

NOTE

Exterior cover or beaded handle assembly shall be replaced if structural damage occurs during fastener removal or if found after fastener removal.

2. Install new fasteners at existing location as required.

5-30. INSTALLATION OF CO_2 CYLINDERS. To install CO_2 cylinders proceed as follows:

Support Equipment Required

Quantity	Description	Reference Number
1	Scale (Gram)	A-A-52021-1 NIIN 00-514-4117 or equivalent
1	Die, Cylinder Thread Chaser	1842-008-01 (CAGE 03688) NIIN 01-069-4040

Materials Required

Quantity	Description	Reference Number
As Required	Cylinder, CO_2 Type III, 35-Gram	MIL-C-25369C
As Required	Seat Seal	849AML NIIN 01-291-3593

1. Weigh a charged CO_2 cylinder and compare the minimum stamped weight with the scale weight. Discard and replace cylinder if scale weight is 2 grams less than minimum stamped weight.

2. To assure a firm cylinder seat, conduct a cylinder thread count. The threaded portion of the cylinder neck shall contain a minimum of seven full threads to assure a firm cylinder seat within inflator body. Any cylinder with less than seven full threads shall be discarded (figure 5-3).

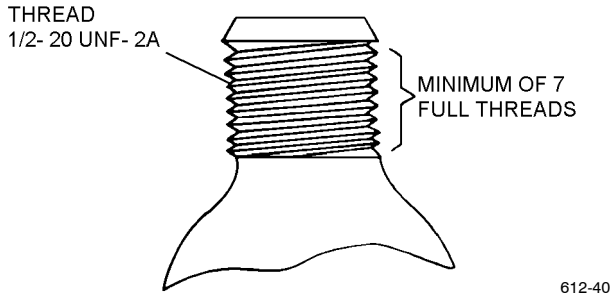

Figure 5-3. Cylinder Thread Count

CAUTION

Steel threads on CO_2 cylinder can cause damage to aluminum threads on inflator if cylinder is not carefully threaded. If binding occurs during installation of cylinder, use thread chaser die on cylinder thread to cut free excessive plating. Reinstall cylinder. If binding still occurs, replace cylinder.

3. Using the cylinder thread chaser die, turn the die to the full extent of the threads on the CO_2 cylinder to cut free any excessive plating covering the threads.

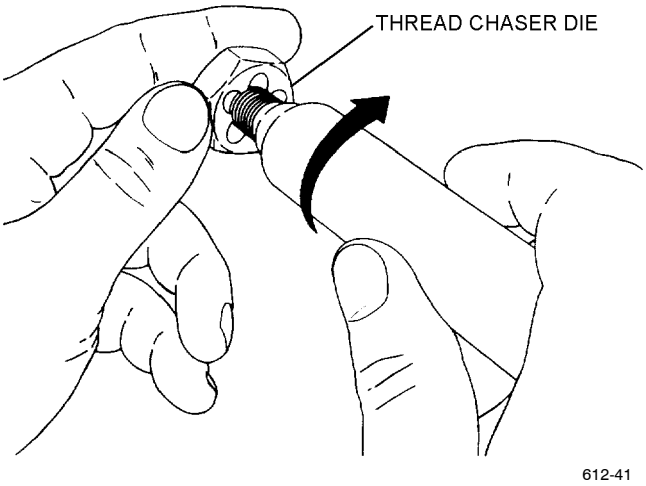

Step 3 - Para 5-30

NOTE

Inspect condition of seat seal gasket and replace as necessary. After each functional check, the seat seal gasket shall be replaced.

4. Remove old seat seal gasket if damaged or if a functional test has been performed.

5. Install new seat seal gasket and carefully thread CO_2 cylinder into inflator body hand tight.

6. Check for secure cylinder fit.

5-31. TESTING.

5-32. FUNCTIONAL TEST. The Functional Test shall be performed prior to placing LPU-34/P in service, every 360-Day Special Inspection, and when a bladder is replaced. The Functional Test is performed as follows:

CAUTION

Ensure work area surrounding preserver is free of foreign objects.

1. Perform beaded handle pull test in accordance with paragraph 5-34.

2. Open exterior cover. Carefully separate zipper by hand, starting at the zipper opening on either side of external cover.

3. Unfold inflation shell assembly.

CAUTION

After each functional test the spent CO_2 cylinders shall be replaced and the CO_2 cylinder piercing pins shall be inspected for serviceability.

4. Actuate inflation assemblies.

5. The life preserver shall fully inflate to design shape, without evidence of restriction, in less than 30 seconds.

6. If the life preserver does not properly inflate, determine cause. Ensure stem and valve are clean and free of foreign matter.

7. If correction is made, the life preserver shall be functionally tested again.

8. Deflate life preserver in accordance with paragraph 5-35 to remove all CO_2.

5-33. LEAKAGE TEST. The LPU-34/P shall be subjected to a Leakage Test each 360-Day Special Inspection. To perform a Leakage Test, proceed as follows:

Support Equipment Required

Quantity	Description	Reference Number
1	Test Fixture (or equivalent)	No Number

CAUTION

Ensure test area is free of foreign objects.

1. Ensure all carbon dioxide has been removed from any preserver which has been functionally tested.

2. Remove LH and RH inflator assemblies and discard gaskets.

3. Unzip inflation shell assembly and remove top and bottom bladders from shell.

CAUTION

If 3-way valve is not used, measuring device valve must be closed when air feed valve is open. Damage may occur to oral inflation valve if air supply pressure entering the life preserver exceeds 10 psi during this test.

NOTE

Refer to figure 5-4, Leakage Test Fixture Schematic. If test fixture meeting requirements indicated is not available, one must be fabricated in order to perform required leakage test.

If a suitable air source is not available, water-pumped nitrogen (BB-N-411) may be substituted.

4. Unlock oral inflation valve and connect to test fixture. Rotate valve to air supply position and inflate bladder. Alternately position valve between measuring device, vent, and air supply until proper pressure of 3.25 psig is attained.

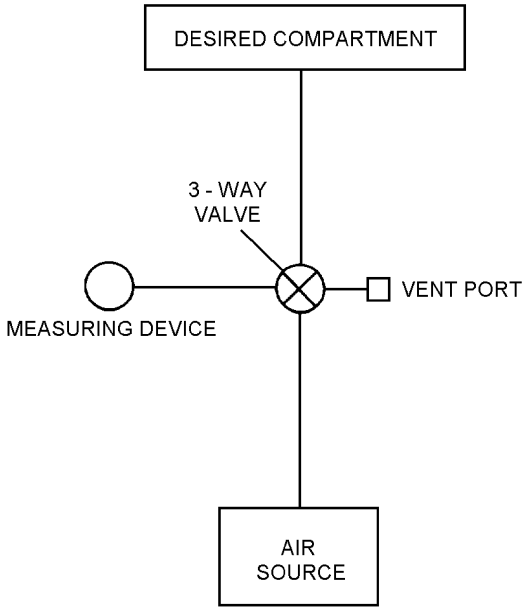

612-31

Figure 5-4. Leakage Test Fixture Schematic

5. Securely shut off the air supply. Then after allowing a minimum of 15 minutes for pressure to stabilize, the pressures shall be readjusted, as necessary, to the leakage test pressures. After ensuring proper test pressures, record time.

6. Disconnect air supply and check for leaks. Ensure all valves are closed.

7. Record temperature and barometric pressure (figure 5-5).

8. After a minimum of 1 hour after completing step 5, record test pressure of both bladders. Test pressure of each bladder shall not decrease to less than 2.50 psig for a life preserver bladder, from a maximum test pressure of 3.25 psig.

9. Record temperature and barometric pressure (figure 5-5). Correct the test pressure for any changes in temperature and barometric pressure using tables 5-3 and 5-4.

UNCORRECTED TEST READING 1.70 PSI

	TEMP.	BARO.
START	75° F	29.90 IN. Hg
END	70° F	29.70 IN. Hg
DIFFERENCE	- 5° F	-0.20
CORRECTION	+0.155	-0.098

TEMP. CORRECTION	+ 0.155
+ BARO. CORRECTION	- 0.098
CORRECTION	+ 0.057
UNCORRECTED READING	1.700 PSI
+ CORRECTION	+ 0.057
CORRECTED READING	1.757 PSI

EXAMPLE

612-32

Figure 5-5. Temperature and Barometric Pressure Test Record

CAUTION

Do not submerge life preservers in water to check for leaks.

10. If pressure of bladder is below 2.50 psig, inflate to correct leakage test pressure and coat bladder with a soap solution to determine if a leak exists. If a leak exists, replace bladder. If no leak is found, check test fixture.

Table 5-3. Temperature Conversion Chart

Temperature Difference (°F)	Correction (psi)
1	0.031
2	0.062
3	0.093
4	0.124
5	0.155
6	0.186
7	0.217
8	0.248
9	0.279
10	0.310
Rise in temperature: subtract from gage reading. Fall in temperature: add to gage reading.	

Table 5-4. Barometric Pressure Conversion Chart

Press. Diff. (inHG)	Corr. (psi)	Press. Diff. (inHG)	Corr. (psi)	Press. Diff. (inHG)	Corr. (psi)	Press. Diff. (inHG)	Corr. (psi)	Press. Diff. (inHG)	Corr. (psi)
0.01	0.005	0.16	0.078	0.31	0.152	0.46	0.225	0.61	0.299
0.02	0.010	0.17	0.083	0.32	0.157	0.47	0.230	0.62	0.304
0.03	0.015	0.18	0.088	0.33	0.162	0.48	0.235	0.63	0.309
0.04	0.020	0.19	0.093	0.34	0.167	0.49	0.240	0.64	0.314
0.05	0.025	0.20	0.098	0.35	0.172	0.50	0.245	0.65	0.319
0.06	0.030	0.21	0.103	0.36	0.176	0.51	0.250	0.66	0.323
0.07	0.035	0.22	0.108	0.37	0.181	0.52	0.254	0.67	0.328
0.08	0.040	0.23	0.113	0.38	0.186	0.53	0.260	0.68	0.333
0.09	0.045	0.24	0.118	0.39	0.191	0.54	0.265	0.69	0.338
0.10	0.049	0.25	0.123	0.40	0.196	0.55	0.270	0.70	0.343
0.11	0.054	0.26	0.127	0.41	0.201	0.56	0.275	0.71	0.348
0.12	0.060	0.27	0.132	0.42	0.206	0.57	0.279	0.72	0.353
0.13	0.064	0.28	0.137	0.43	0.211	0.58	0.284	0.73	0.358
0.14	0.069	0.29	0.142	0.44	0.216	0.59	0.289	0.74	0.363
0.15	0.073	0.30	0.147	0.45	0.221	0.60	0.294	0.75	0.368

Rise in pressure: add to gage reading.
Fall in pressure: subtract from gage reading.

11. Deflate bladder in accordance with paragraph 5-35.

12. Reassemble preserver and pack in accordance paragraph 5-38.

13. Records Updating. Make necessary entries on appropriate form in accordance with OPNAVINST 4790.2 Series.

5-34. BEADED INFLATION HANDLE PULL TEST. To perform the beaded inflation handle pull test, proceed as follows:

1. Manually release beaded handles.

2. If snap fasteners do not release, inspect male and female snap fasteners for damage. Replace entire beaded inflation handle if required and repeat step 1. Replace exterior cover if required.

3. Attach gauge to webbing between third and fourth bead on inflation handle.

4. Hold inflation lanyard securely against exterior cover to ensure life preserver actuating lever will not be pulled.

5. Add a 25-pound force to check the security of the beaded handle attachment to the inflation lanyard.

6. Examine lanyard for frays, ruptures, thin spots, and security. If unsatisfactory, replace entire beaded inflation handle.

5-35. DEFLATION.

5-36. To deflate the life preserver, proceed as follows:

Support Equipment Required

Quantity	Description	Reference Number
1	Pump, Rotary Vacuum (or equivalent)	1397B-01 NIIN 00-052-5015
As Required	Hose, 3/8- or 1/2-inch inside diameter, Rubber	—

1. Lay bladders/inflation shell assembly on a flat surface. Smooth bladder/inflation shell assembly toward oral inflation tube.

CAUTION

Ensure all air is removed from bladder to prevent possible expansion of trapped air with increasing altitude and for ease of packing.

2. Apply a vacuum to remove all air through oral inflation tube. (Bladder should be wrinkled/puckered around oral inflation tube when all air has been removed.)

3. Turn oral inflation valve locking nut to lock position to ensure no air returns to the bladder.

5-37. PACKING PROCEDURES.

NOTE

The requirement for the packer to sign the Inspection Record Patch on the life preserver was rescinded by the 28th In-Service Management Panel. Justification: Most inspection record history patches become unreadable and packer's and inspector's names are documented on Aviation Crew Systems records. All other documentation requirements remain unchanged.

5-38. Pack the LPU-34/P life preserver as follows:

Support Equipment Required

Quantity	Description	Reference Number
As Required	Spring Clamps (packing aids) (Note 1)	P/N 3201-HT
As Required	Bladder Assembly Keeper (packing aids)	P/N 101202 NIIN 01-469-9567
1	Zipper Slider (packing aid)	P/N 101201 NIIN 01-467-6537
1	Pump, Rotary Vacuum (or equivalent)	NIIN 00-052-5015
As Required	Hose, 3/8 or 1/2-inch, inside diameter, Rubber	—

Notes: 1. The plastic tips of Spring Clamps (packing aids) may become loose and become FOD hazard. To correct and prevent this condition, remove plastic tips from clamp, coat metal tip of clamp with adhesive (MIL-A-5540A), and reinstall plastic tips while adhesive is still tacky. Spring Clamp is available through GSA (www.gsaadvantage.gov)

Materials Required

Quantity	Description	Reference Number
As Required	Thread, Nylon, Size E	P/N V-T-295 NIIN 00-204-3884
1	Valve Stem Kit (Note 1)	P/N 105AS100-6 (CAGE 30003) NIIN 00-113-8290

Notes: 1. Valve Stem Kit, P/N 105AS100-6, NIIN 00-113-8290, contains one top and one bottom gasket.

NOTE

Reference to LH and RH refers to wearer's left hand and right hand orientation.

1. Ensure life preserver has received Place In Service inspection in accordance with paragraph 5-23.

2. Remove air from LH and RH bladders. Lay bladder on a flat surface. Smooth bladder toward oral inflation tube. Apply a vacuum to remove all air through oral inflation tube. (Bladder should be wrinkled/puckered around the oral inflation valve when all air has been removed.) Turn locking nut to lock position to ensure no air returns to the bladder.

3. Place inner (bottom) bladder (LH, P/N 102230) into the inflation shell assembly through the zipper opening. Insert valve stem and oral inflation tube through respective holes in inflation shell assembly. Work wrinkles out until bladder is smooth.

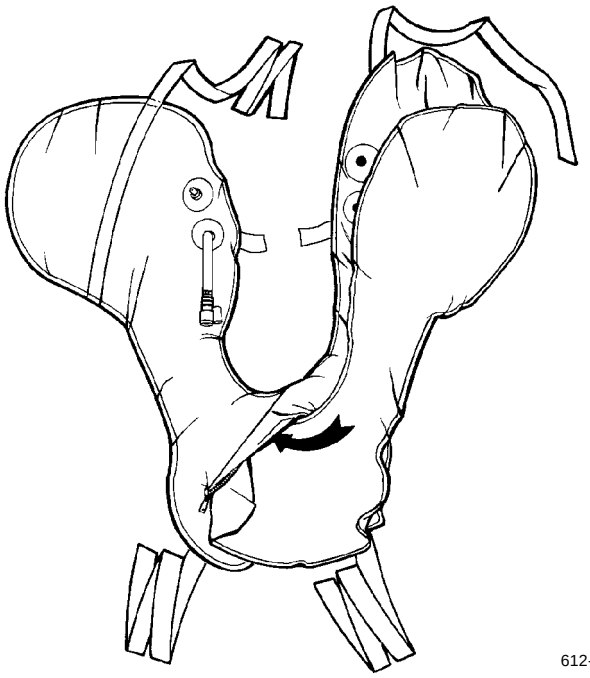

612-93

Step 3 - Para 5-38

4. Place outer (top) bladder (RH, P/N 102240) into the inflation shell assembly on top of the inner (bottom) bladder. Work wrinkles out until bladder is smooth.

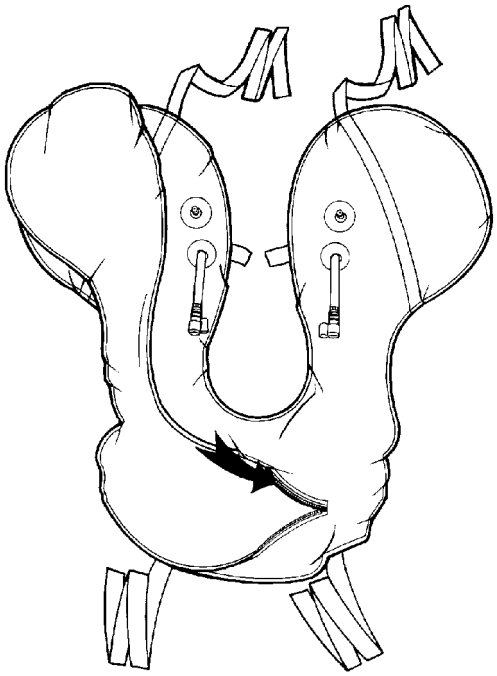

612-94

Step 4 - Para 5-38

5. Zip the inflation shell assembly closed with bladders in position.

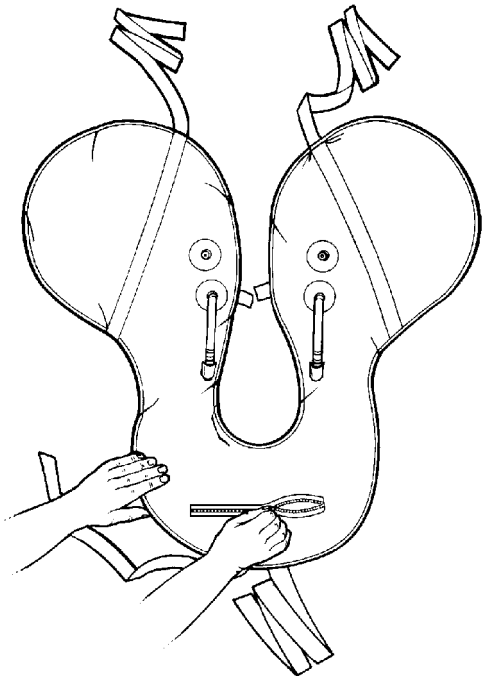

612-95

Step 5 - Para 5-38

6. Attach the black portion of the LH inflation lanyard and beaded handle to the manual inflator actuating lever using a lark's head knot. (LH is marked on the beaded handle, P/N 103251-3.)

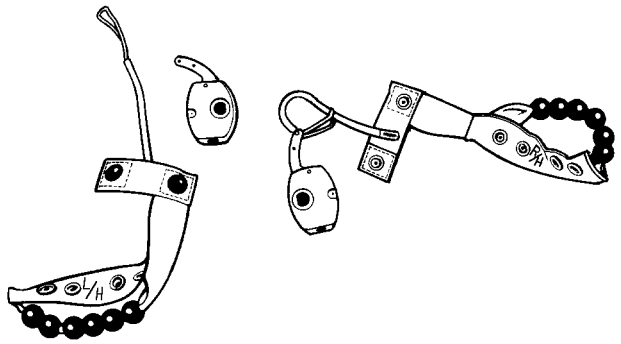

612-96

Step 6 - Para 5-38

WARNING

Ensure gaskets are properly positioned. The top gasket has a larger internal diameter than the bottom gasket.

7. Install new gaskets from gasket kit. Place smaller ID gasket on valve stem first.

8. Carefully install inflator with left beaded handle onto the LH valve stem.

NOTE

Inflator lever shall face outboard. Activation arm will pull downward.

9. Install larger ID gasket onto valve stem.

10. Tighten cap nut on valve stem and torque to value of 15 ±1 in-lb.

CAUTION

Check to ensure there is no trapped cloth material to cause binding and restrict movement of inflator.

11. Grasp the 2-inch diameter reinforcement patch located under the inflator in one hand and the inflator in the other. Holding the patch firmly, attempt to rotate the inflator clockwise and counterclockwise. The inflator should rotate at least one quarter turn in either direction without restriction. If inflator does not bind, proceed to step 12. If inflator is binding, remove cap nut, inflator and both top and bottom gaskets. Discard gaskets and repeat steps 7 through 11.

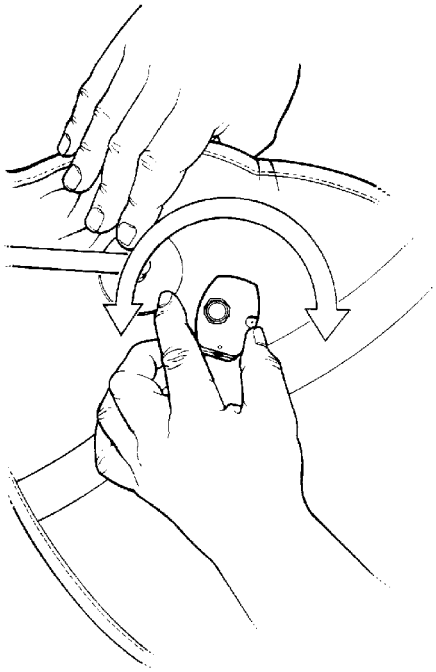

612-97

Step 11 - Para 5-38

12. Repeat steps 6 through 11 for installation of the RH beaded handle and manual inflator. (RH is marked on the beaded handle, P/N 103251-4.)

13. Ensure seat seal gasket is in place.

14. Ensure CO_2 cylinders have been inspected in accordance with paragraph 5-30.

15. Install CO_2 cylinders, MIL-C-25369C Type III, hand tight.

16. Insert oral inflation tube through hole in upper portion of protective cover and into retaining loop attached to inflation shell assembly. Install RH inflator cover behind and around inflator and CO_2 cylinder.

a. Check RH larks head knot for security and proper routing.

b. Check CO_2 cylinder for tightness.

c. Ensure oral inflation valve is locked closed and valve is in loop.

d. Close protective cover and secure with hook and pile fastener.

17. Repeat step 16 for LH side.

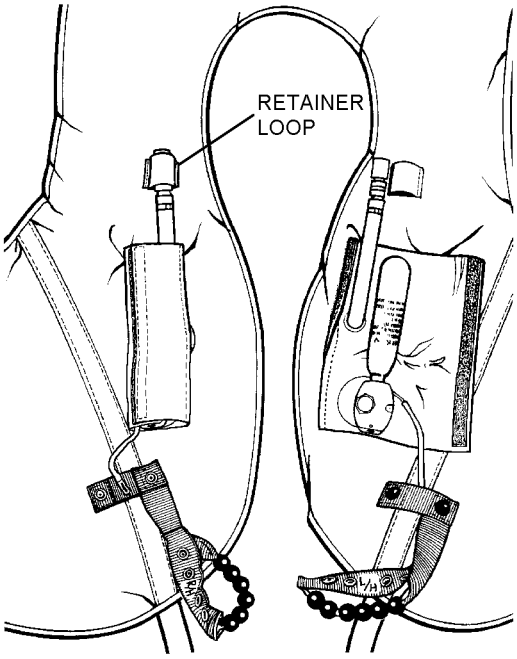

Step 17 - Para 5-38

612-98

18. Fold the left side of the inflation shell assembly (steps 18a thru 18h).

CAUTION

Avoid placing spring clamps (packing aids) directly onto the zipper closure of the inflation shell assembly (P/N 102221). Spring clamps placed on zipper closure may damage bladders.

NOTE

Place packing aids around inflation shell assembly and exterior cover as required to aid in packing and zipper function. Suggested approximate locations are shown.

a. Locate the first fold line on the left side of the inflation shell assembly. The line goes from the end of the zipper to the inboard edge of the bottom loop on the inflation shell assembly.

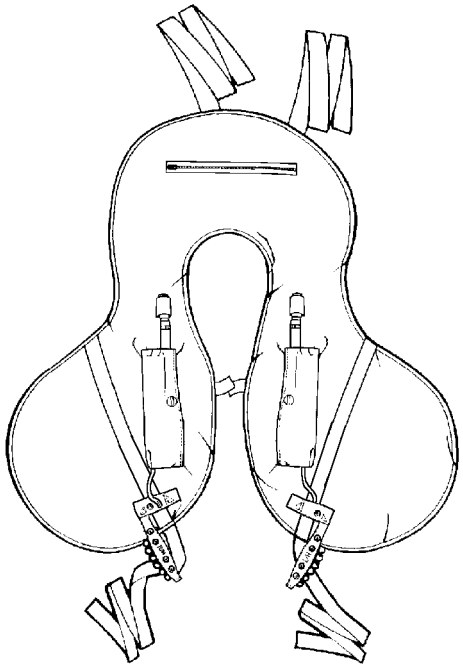

612-99

Figure 5-6. Inflation Shell Assembly

b. Make the first fold under the assembly on the first fold line. Use packing aids as necessary to secure the fold.

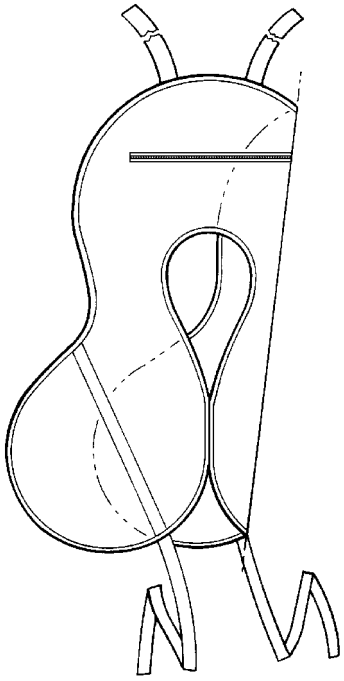

612-100

Step 18b - Para 5-38

c. Make second fold as shown, 2 inches from the first fold to bring the inflation shell assembly out from under itself except for the 2-inch fold.

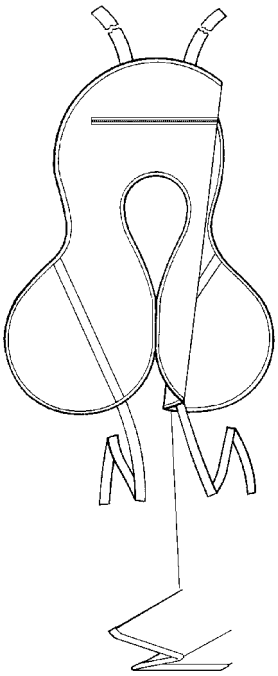

612-101

Step 18c - Para 5-38

d. Make third fold as shown, folding inboard edge under inflator.

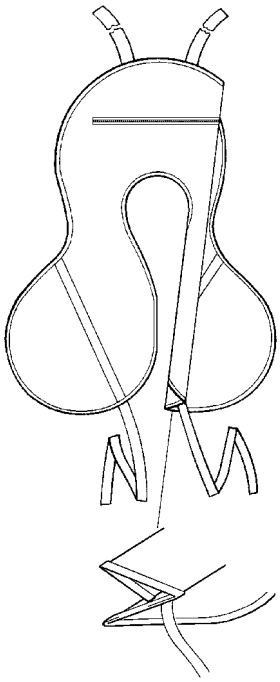

612-102

Step 18d - Para 5-38

e. Make fourth fold, folding bottom of inflation shell assembly under the inflator as shown. The fourth fold line is even with the lower edge of the inflator. Use packing aids as necessary to hold all folds in position. Keep lower strap clear of folds.

NOTE

One side of clamp may be placed between inflator and inflation shell assembly to hold fourth fold in position.

f. Position LH buckle strap to face inboard.

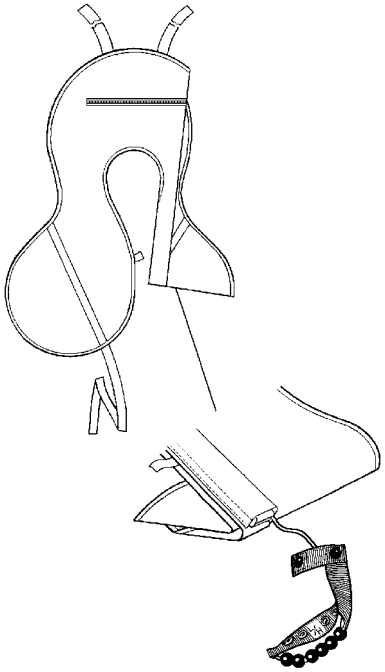

612-103

Step 18f - Para 5-38

g. Make fifth fold, folding outboard edge of inflation shell assembly to meet the inflator.

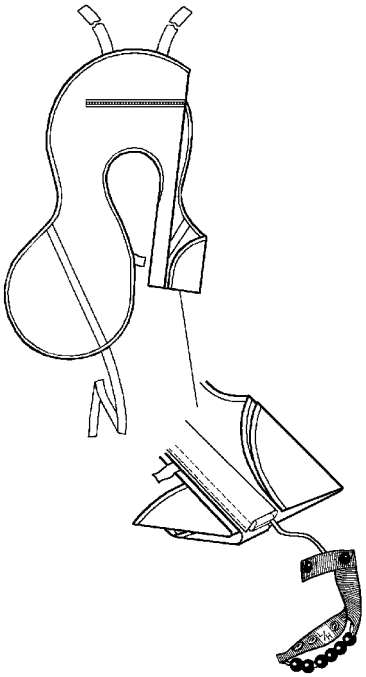

612-104

Step 18g - Para 5-38

NOTE

When placing packing aid (hook and pile) around folded inflation shell assembly, ensure that the LH lower strap is retained by packing aid and facing toward packer.

h. Make sixth fold, folding outboard fifth fold line of inflation shell assembly over the inflator. Secure folds with packing aids as required.

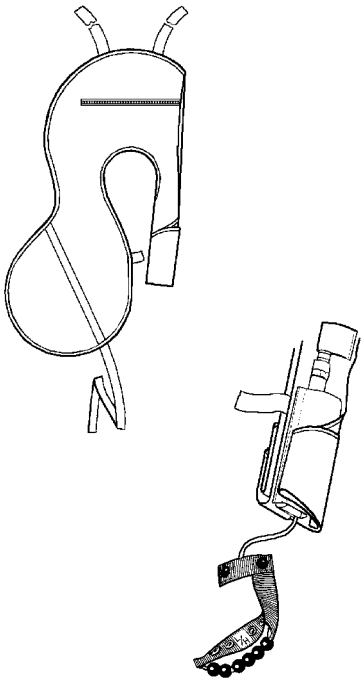

612-105

Step 18h - Para 5-38

19. Fold the right side of the inflation shell assembly (steps 19a through 19h).

a. Locate the first fold line on the right side of the inflation shell assembly. The line goes from the end of the slide fastener to the outboard edge of the bottom loop on the inflation shell assembly.

b. Make the first fold under the assembly on the first fold line. Use packing aids as necessary to secure the fold.

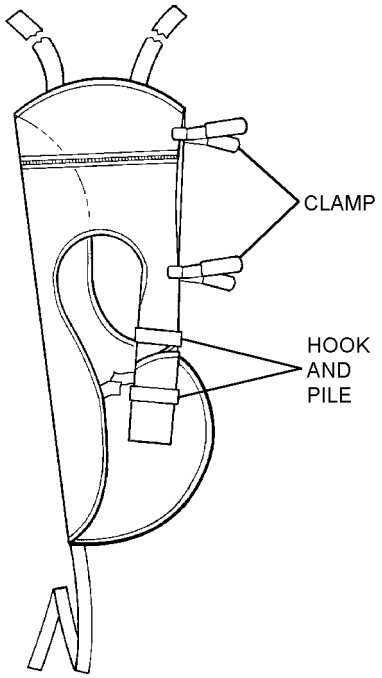

612-106

Step 19b - Para 5-38

c. Make second fold as shown, 2 inches from the first fold to bring the inflation shell assembly out from under itself except for the 2-inch fold.

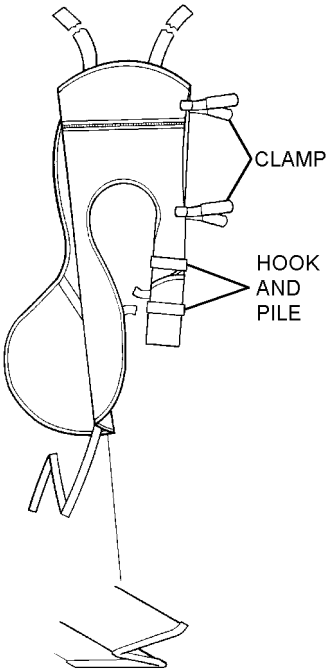

612-107

Step 19c - Para 5-38

d. Make third fold as shown, folding inboard edge under inflator.

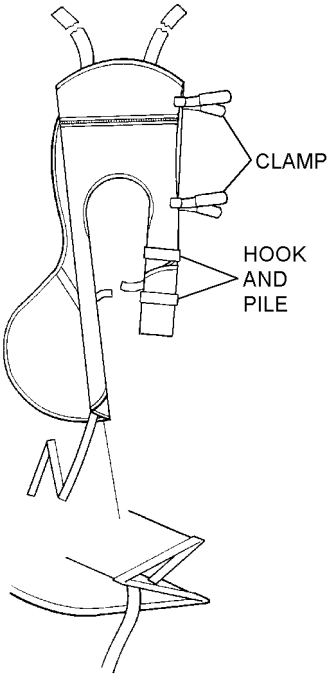

612-108

Step 19d - Para 5-38

e. Make fourth fold, folding bottom of inflation shell assembly under the inflator as shown. The fourth fold line is even with the lower edge of the inflator. Use packing aids as necessary to hold all folds in position. Keep lower strap clear of folds.

NOTE

One side of clamp may be placed between inflator and inflation shell assembly to hold fourth fold in position.

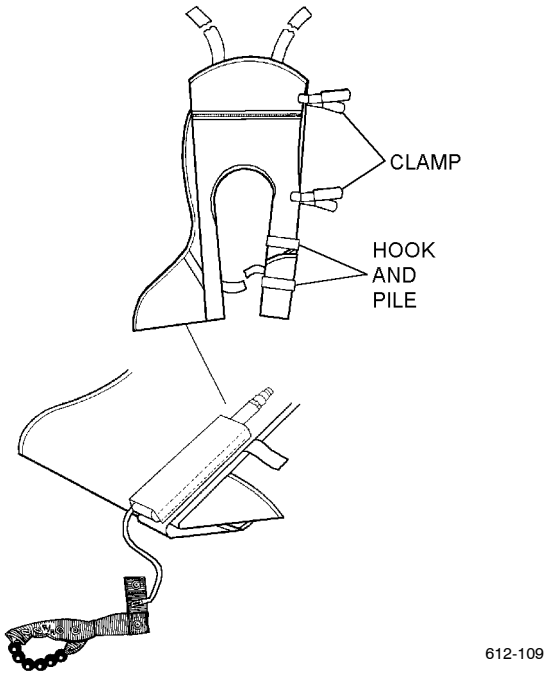

Step 19e - Para 5-38

f. Position RH buckle strap to face inboard.

g. Make fifth fold, folding outboard edge of inflation shell assembly to meet the inflator.

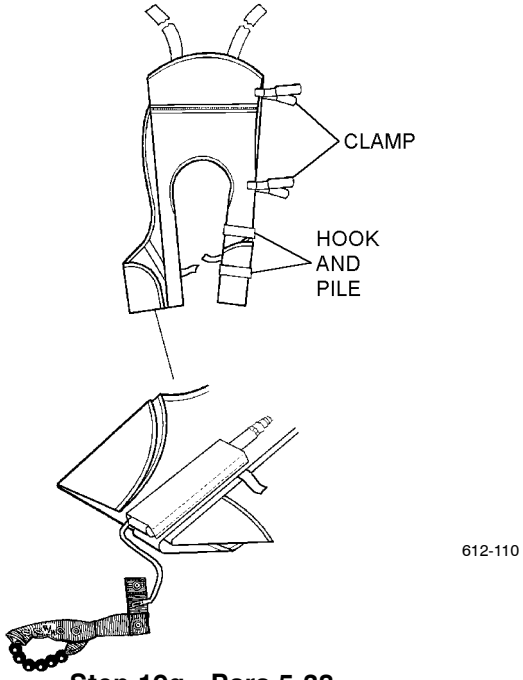

Step 19g - Para 5-38

NOTE

When placing packing aid (hook and pile) around folded inflation shell assembly, ensure that the RH lower strap is retained by packing aid and facing toward packer.

h. Make sixth fold, folding outboard fifth fold line of inflation shell assembly over the inflator. Secure folds with packing aids as required.

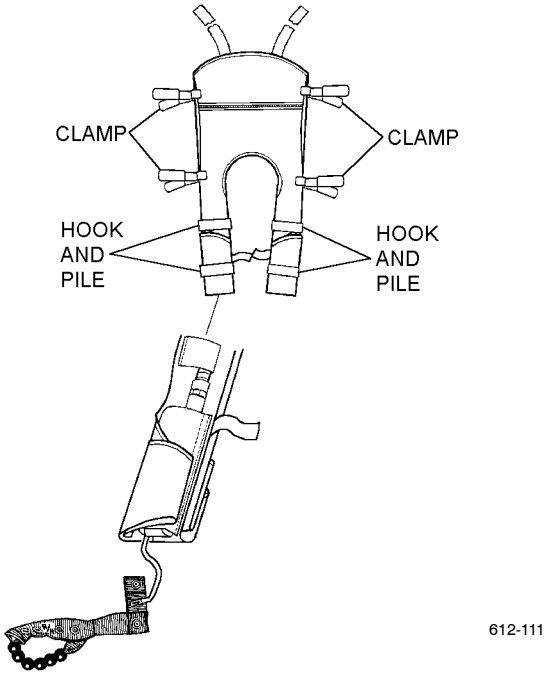

Step 19h - Para 5-38

20. Fold the top of the inflation shell assembly.

a. Fold LH top side inboard. The fold line runs from the outboard edge of the upper strap attachment points to a position on the outboard edge in line with the top of the collar arc. Secure folds with packing aids as required.

b. Deleted

c. Fold RH top side inboard similar to LH top side.

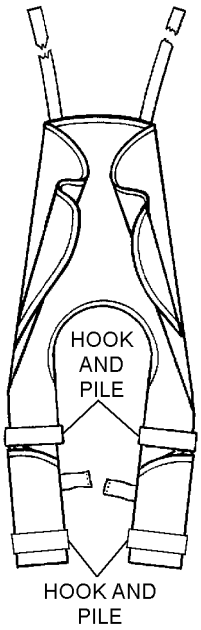

Step 20c - Para 5-38

d. Fold top down as shown. Fold line is under upper straps and approximately 2 1/4 inches from the top of the collar arc.

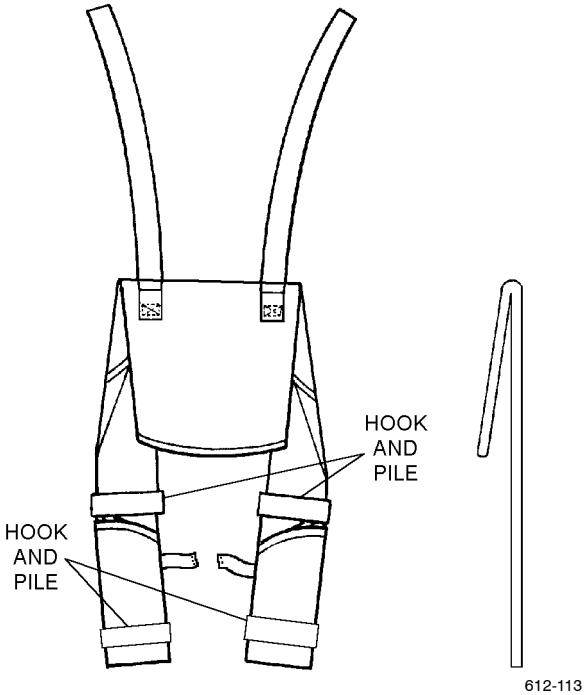

Step 20d - Para 5-38

e. Accordion fold top up at the fold line even with the top of the collar arc.

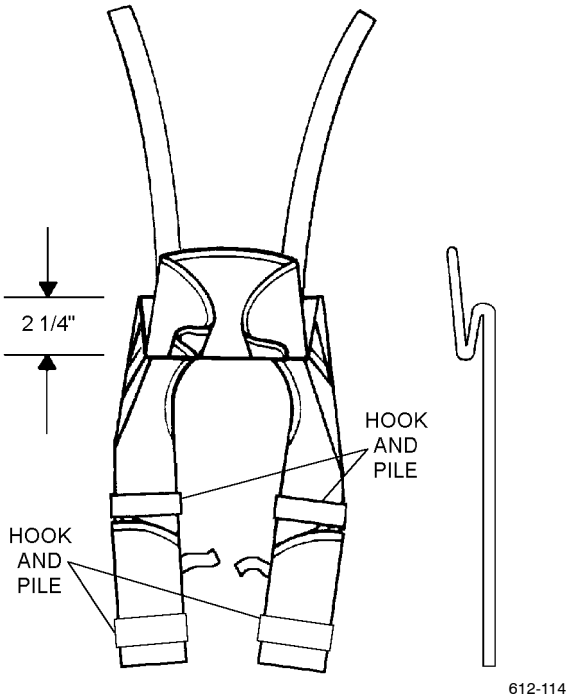

Step 20e - Para 5-38

f. Accordion fold the top down even with the upper fold line.

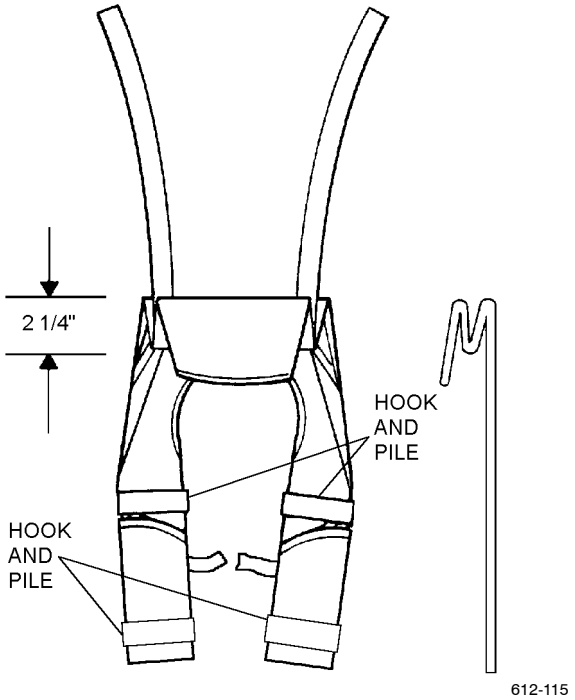

Step 20f - Para 5-38

g. Tuck the remaining upper portion under the last fold as shown. Do not fold around all folds. Use packing aids to hold in position.

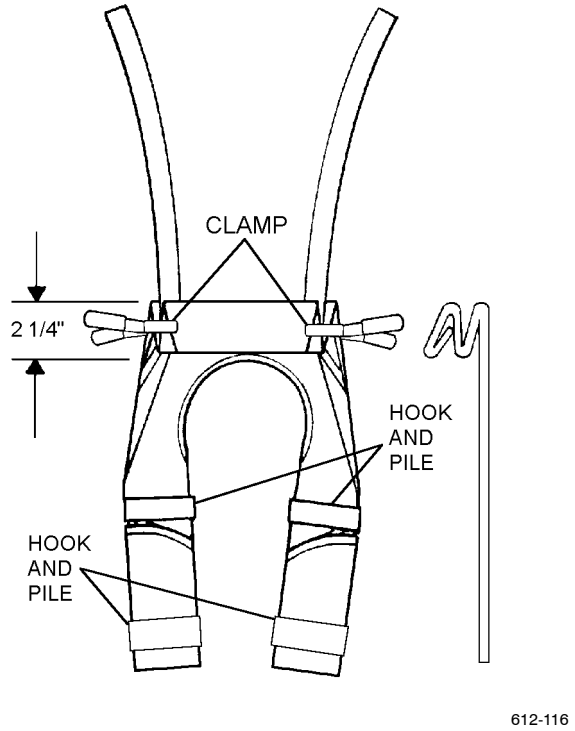

Step 20g - Para 5-38

h. Ensure that all folds are as previously directed.

21. Attach the zipper slider.

a. Attach the zipper slider, flat opening first, on the exterior cover, starting on the RH lower bottom grommet side. Attach the slider to bottom side of the zipper chain. The zipper slider pull tab will be on the outside of the exterior cover.

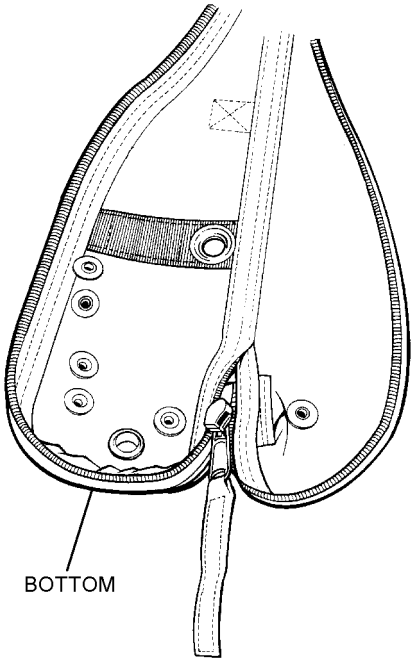

Step 21a - Para 5-38

b. Bring zipper slider all the way around to the LH side, lower bottom section.

22. Place the folded inflation shell assembly into the open exterior cover, with the inflator on top.

23. Place the LH lower strap through the lower grommet.

24. For P/N 830AS250-1, position the red inflation lanyard to pass along the bottom of the inflator and between the zipper halves. For P/N 830AS250-3, route red inflation lanyard under the inflator and between zipper halves.

NOTE

Inflation lanyard is routed above the zipper chain halves prior to connecting the second zipper half to zipper slider in order to keep inflation lanyard clear of zipper chain halves.

25. Connect second zipper half to zipper slider.

26. Move zipper slider down to where exterior cover separates, approximately 2 inches from zipper end. Stop zipping. Ensure the red inflation lanyard exits the folded life preserver along the inflation lever, passes along the bottom of the inflator, is not under the LH lower strap, and is in between the two zipper halves. See graphics for steps 23 thru 26 for proper positioning.

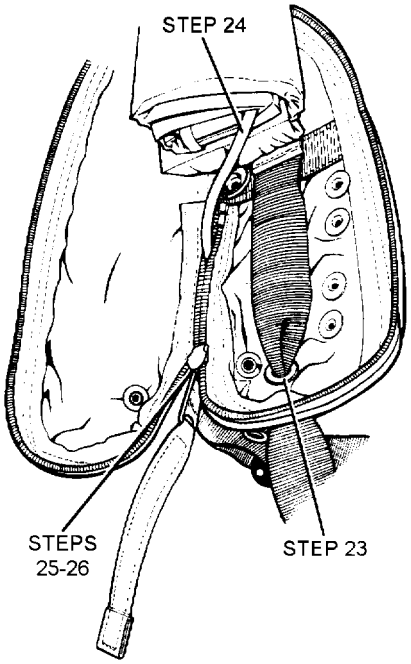

612-118

Steps 23 thru 26 - Para 5-38

WARNING

Failure to separate the zipper halves as directed may result in a life preserver malfunction.

27. Separate the end of the zipper halves down to the zipper slider.

28. While pulling LH lower strap down to the stopper, position folded LH inflation shell assembly even with the bottom of the exterior cover.

29. Place LH buckle strap through the left side grommet of the exterior cover.

WARNING

For safety and tool control, ensure all packing aids are removed as slider is closed around life preserver casing.

NOTE

Close exterior cover carefully. Do not force zipper slider.

30. Zip the exterior cover around bottom and up the side approximately 4 to 6 inches. Remove any packing aids in inflator area before zipping closed.

31. Turn life preserver over to attach the LH beaded handle to the exterior cover.

a. Secure snap located at 90 degree elbow of beaded handle webbing to exterior cover snap on front of life preserver.

CAUTION

Beaded handle webbing must not trap lower LH strap leading from grommet on back of exterior cover. Lower strap must be able to fall free from grommet.

b. Route beaded handle webbing down and around end of life preserver, up to left of lower LH strap grommet, and secure beaded handle to four snaps on exterior cover.

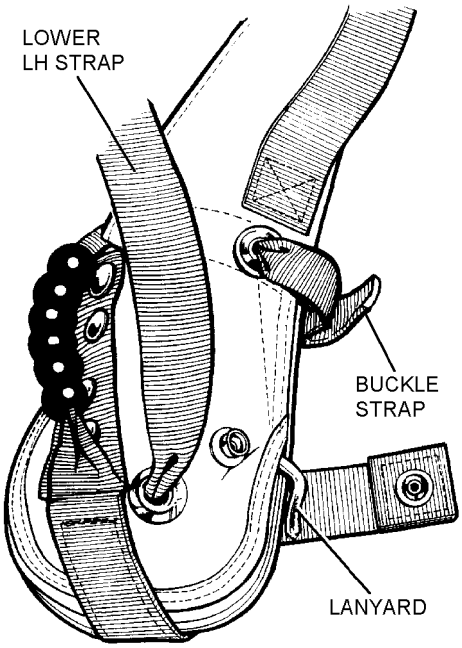

612-119

Step 31b - Para 5-38

32. With one hand holding the exterior cover, push the folded inflation shell assembly down as far as possible to form a snug fit inside the bottom of the exterior cover.

33. Ensure any excess length of inflation lanyard is tucked inside exterior cover. Then secure end of beaded handle webbing to snap located above and to right of lower LH strap grommet on back of life preserver.

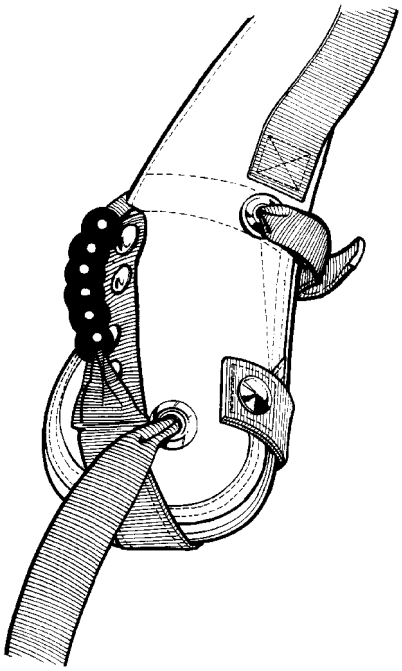

612-120

Step 33 - Para 5-38

34. Place upper LH and RH straps through upper grommets in the exterior cover.

35. Close exterior cover carefully by zipping up the side and across the top. Do not force the zipper slider.

CAUTION

Remove packing aids while zipping.

36. Place RH buckle strap through the right side grommet of the exterior cover.

37. Place lower RH strap through the bottom RH grommet.

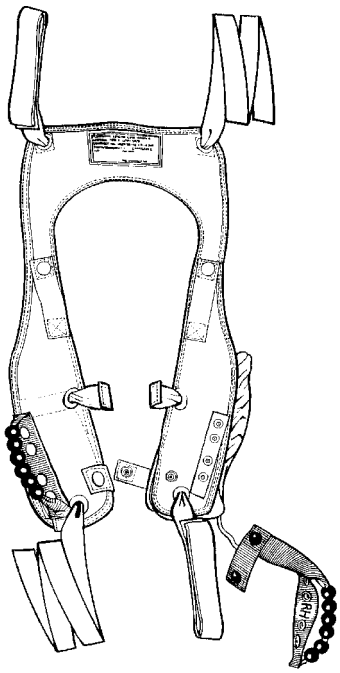

612-121

Step 37 - Para 5-38

CAUTION

Ensure no zipper separation occurs while zipping.

NOTE

Push inflation shell assembly up into exterior cover. This will aid in zipping around bottom of right side.

38. Continue zipping around exterior cover, stopping about 3 to 4 inches from bottom right side. Do not force the zipper slider.

39. Ensure the red inflation lanyard exits the folded life preserver along the inflation lever, passes along the bottom of the inflator and is not under the RH lower strap.

NOTE

Tuck excess length of red inflator lanyard back into exterior cover.

40. Continue zipping around bottom, making sure the RH inflation lanyard and beaded handle exit at zipper end.

NOTE

Check for zipper separation before removal of zipper slider. If separation is found, unzip slider past point of separation and reclose zipper. Apply packing aids as needed.

41. Remove zipper slider and retain for tool inventory.

42. Turn life preserver over to attach the RH beaded handle to the exterior cover.

a. Secure snap at 90 degree elbow of beaded handle webbing to exterior cover snap on front of life preserver.

CAUTION

Beaded handle must not trap lower RH strap leading from grommet on back of exterior cover. Lower strap must be able to fall free from grommet.

b. Route beaded handle webbing down and around end of life preserver, up to right of grommet for lower RH strap, and secure beaded handle to four snaps on exterior cover.

43. Ensure any excess length of inflation lanyard is tucked inside exterior cover. Then secure end of beaded handle webbing to snap located above and to left of lower RH strap on back of life preserver.

44. Grasp the ends of the upper and lower LH straps and pull until the cloth stoppers are tight against the grommets. Repeat for the RH side.

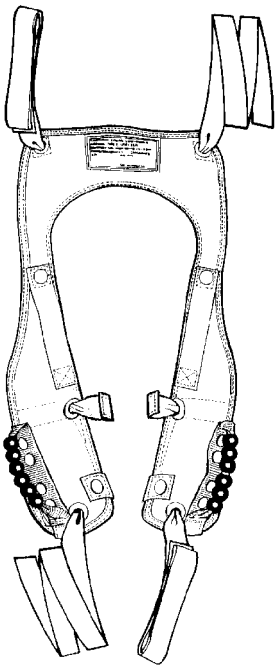

612-122

Step 44 - Para 5-38

45. Deleted

THIS PAGE INTENTIONALLY LEFT BLANK.

NOTE

Use only Buckle P/N 101-1100-5614. There are no authorized substitutes.

46. From the front side of the collar, weave the LH buckle strap through the LH (male) buckle half as shown. Insert strap through the single opening side of the buckle first.

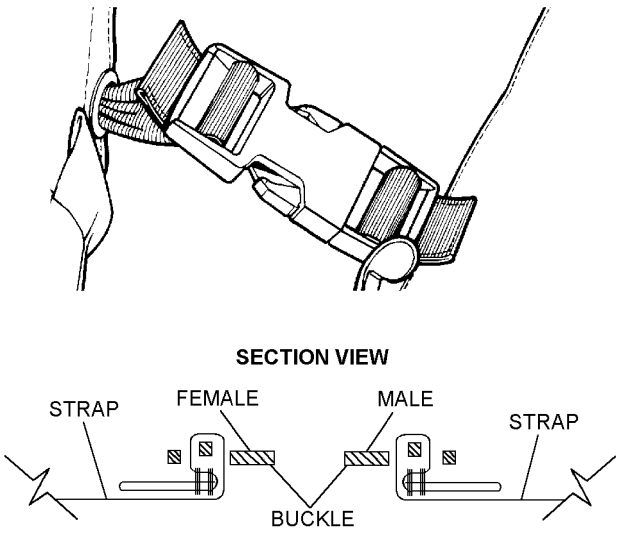

Step 46 - Para 5-38

47. Weave the RH buckle strap through the RH (female) buckle half in the same manner as the LH side.

48. Deleted

49. Inspect the zipper edge to ensure no coil separation. If separation is found, the exterior cover must be reassembled. Inspect male and female buckle halves for proper installation.

50. Account for all tools and packing aids.

51. Make necessary entries on appropriate forms in accordance with OPNAVINST 4790.2 Series.

5-39. CLEANING AND SALTWATER DECONTAMINATION.

5-40. CLEANING. If required to clean any portion of the life preserver, remove any detachable items and proceed as follows:

Materials Required

Quantity	Description	Reference Number
As Required	Detergent, General Purpose	MIL-D-16791 NIIN 00-282-9699
As Required	Lint-free Cloth, Type II	MIL-C-85043 NIIN 00-044-9281

CAUTION

Solvents shall not be used to clean life preservers.

1. Prepare solution of detergent (MIL-D-16791) consisting of 1/4 to 1/2 ounce of detergent per gallon of water.

2. Apply cleaning solution to soiled area with a spray or sponge.

3. Allow solution to remain on surface for several minutes, then agitate with a soft brush or rag.

4. Rinse surface thoroughly with water, wipe with a cloth or sponge. Repeat this application until surface is free from all solution.

5. Dry life preserver with a lint-free cloth (MIL-C-85043) and allow to dry completely.

5-41. SALTWATER DECONTAMINATION. After every immersion in salt water, the life preserver shall be rinsed in clean fresh water as follows:

1. Rinse all components in fresh water.

2. Inflate bladder with air and allow to dry.

3. Clean all components in accordance with paragraph 5-40.

4. Perform 360-Day Special Inspection in accordance with paragraph 5-22.

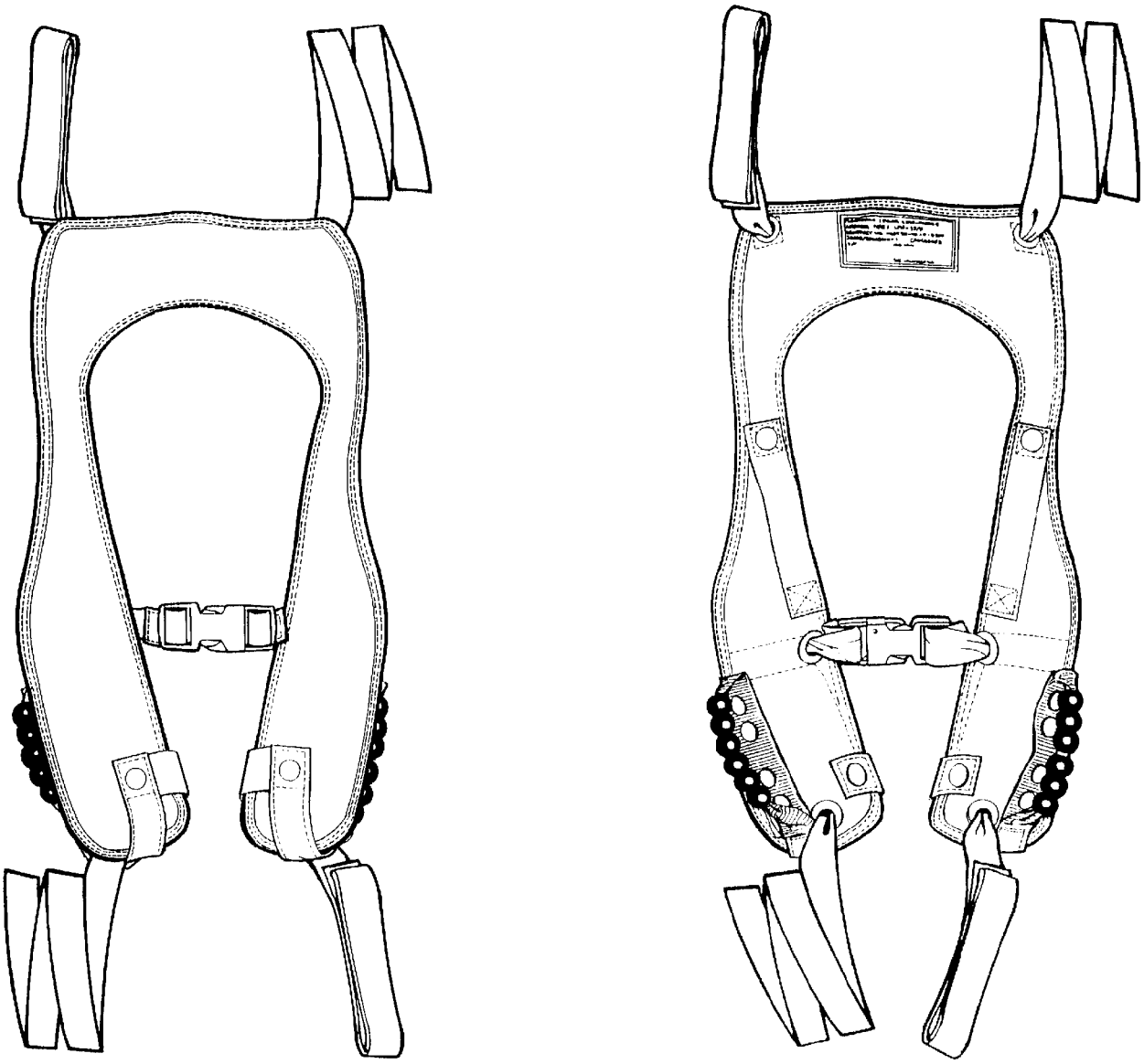

612-83

Figure 5-7. LPU-34/P Life Preserver, Packed

Section 5-4. Illustrated Parts Breakdown (IPB)

5-42. GENERAL.

5-43. This section lists and illustrates the assemblies and detail parts of the LPU-34/P Low Profile Floatation Collar.

5-44. The Illustrated Parts Breakdown should be used during maintenance when requisitioning and identifying parts.

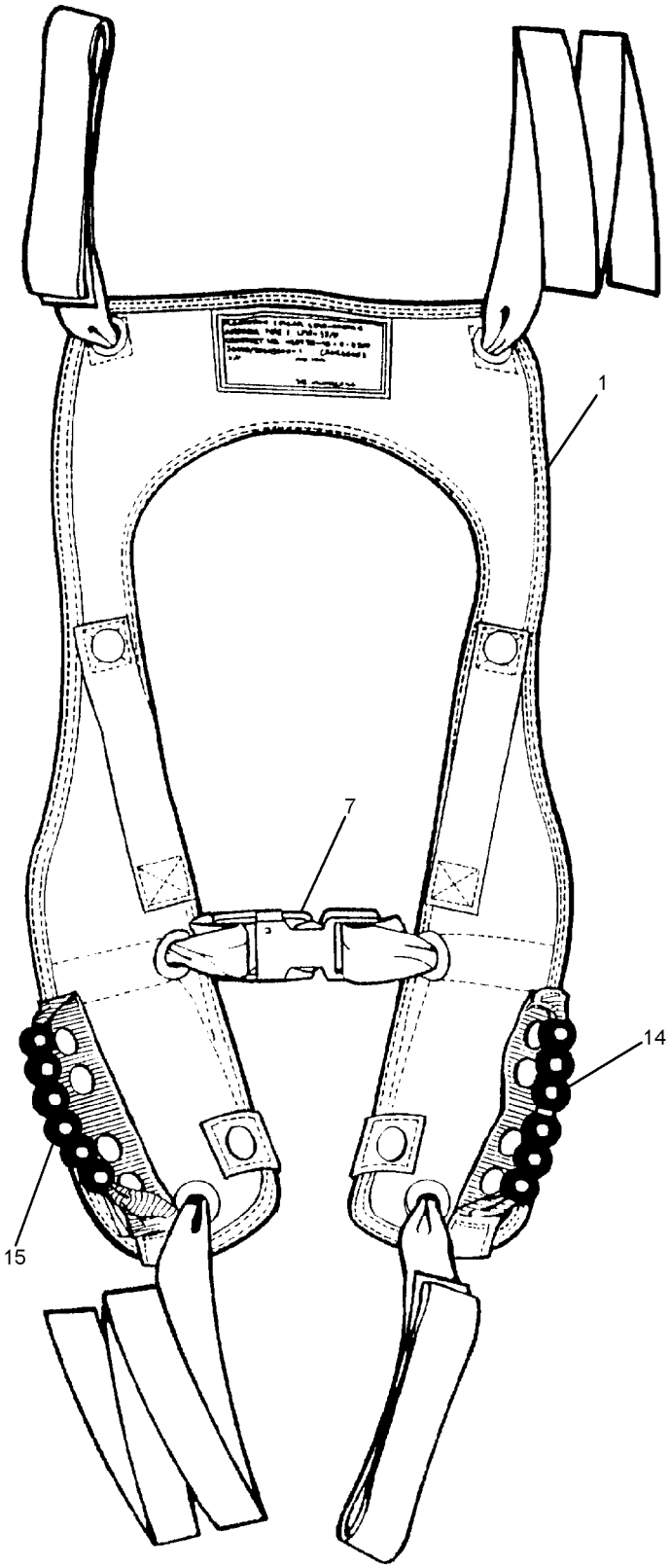

612-126

Figure 5-8. LPU-34/P, Low Profile Floatation Collar, Life Preserver (Sheet 1 of 2)

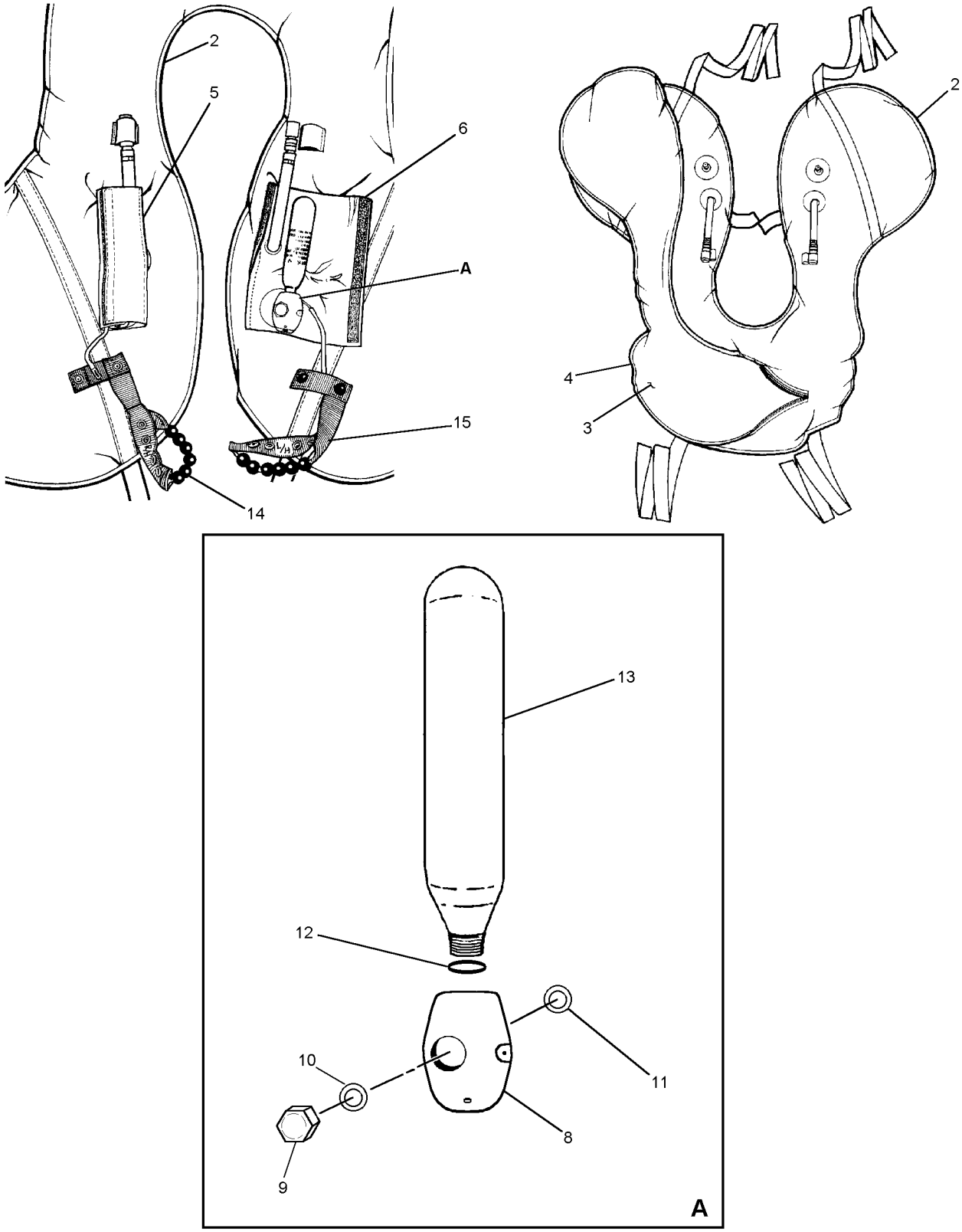

612-127

Figure 5-8. LPU-34/P, Low Profile Floatation Collar, Life Preserver (Sheet 2 of 2)

Figure and Index Number	Part Number	Description 1 2 3 4 5 6 7	Units Per Assembly	Usable On Code
5-8	830AS250-1	LPU-34/P, Low Profile Floatation Collar, ... Life Preserver	REF	A
	830AS250-3	LPU-34/P, Low Profile Floatation Collar, ... Life Preserver	REF	B
-1	103210	. EXTERIOR COVER ASSEMBLY/CASING . . . . . (CAGE 05DK2)	1	
-2	102221	. INFLATION SHELL ASSEMBLY . . . . . (CAGE 05DK2)	1	
-3	102230	. INNER (BOTTOM) INFLATABLE . . . . . ASSEMBLY (CAGE 05DK2)	1	
-4	102240	. OUTER (TOP) INFLATABLE ASSEMBLY . . . . . (CAGE 05DK2)	1	
-5	102228-1	. INFLATOR COVER RH (CAGE 05DK2)	1	
-6	102228-2	. INFLATOR COVER LH (CAGE 05DK2)	1	
-7	101-1100-5614	. PLASTIC BUCKLE, Male/Female (Note 3) . . . . . (CAGE 02768)	1	
-8	840AMLS	. INFLATION DEVICE, Manual . . . . . (CAGE 30003)	2	
		(ATTACHING PARTS)		
-9	52A6600	. VALVE CAP, Inflator (CAGE 80049)	2	
-10	105AS100-3	. GASKET, Top (CAGE 30003) (Note 1)	2	
-11	105AS100-4	. GASKET, Bottom (CAGE 30003) (Note 1)	2	
		---*---		
-12	849AML	. . SEAT SEAL	2	
-13	MIL-C-25369C	. CO_2 CYLINDER, Type III, 35 Gram	2	
-14	103251-3	. BEADED HANDLE RH (CAGE 05DK2)	1	B
-15	103251-4	. BEADED HANDLE LH (CAGE 05DK2)	1	B

Notes:
1. Top and bottom gaskets are obtained from Valve Stem Kit, P/N 105AS100-6, NIIN 00-113-8290, which contains one top and one bottom gasket.
2. Packing Aids for LPU-34/P: Zipper Slide Assembly, P/N 101201 (CAGE 05DK2) Bladder Assembly Keeper (4), P/N 101202 (CAGE 05DK2), 1″ Spring Clamp, P/N 3201-HT.
3. No substitutes authorized.

NUMERICAL INDEX

Part Number	Figure and Index Number	SM&R Code
MIL-C-25369C	5-8-13	PAGZZ
101-1100-5614	5-8-7	PAGZZ
102221	5-8-2	PAGZZ
102228-1	5-8-5	PAGZZ
102228-2	5-8-6	PAGZZ
102230	5-8-3	PAGZZ
102240	5-8-4	PAGZZ
103210	5-8-1	PAGZZ
103251-3	5-8-14	PAGZZ
103251-4	5-8-15	PAGZZ
105AS100-3	5-8-10	PAGZZ
105AS100-4	5-8-11	PAGZZ
52A6600	5-8-9	PAGZZ
830AS250-1	5-8	PCGZZ
840AMLS	5-8-8	
849AML	5-8-12	XAGZZ

THIS PAGE INTENTIONALLY LEFT BLANK.

CHAPTER 6

LIFE PRESERVER, LOW-PROFILE FLOATATION COLLAR, LPU-36/P

Section 6-1. Description

6-1. GENERAL.

WARNING

The LPU-36/P Life Preserver contains an automatic inflation device and is configured for use only in aircraft with ejection seat systems.

6-2. The LPU-36/P, Life Preserver, Low Profile Floatation Collar (LPFC) (figure 6-1) is equipped with the FLU-8B/P automatic/manual inflator. The LPU-36/P is authorized for use only by aircrew personnel operating aircraft equipped with ejection seat systems. It is designed as a constant wear item for use with survival vests and other aircrew equipment. The LPU-36/P weighs 3 1/4 pounds and provides a minimum of 65 pounds of buoyancy. There are no survival items attached to the life preserver and it does not interfere with removal of a non-integrated parachute harness.

6-3. The LPU-36/P (LPFC) has a warning label on the side facing the wearer to indicate that the LPU-36/P is not for use in aircraft which do not have an ejection seat system. The zipper in the LPU-36/P is black in color to distinguish it from the LPU-34/P which does not contain the FLU-8B/P. (The LPU-34/P, which is designed for use in non-ejection seat aircraft, has a zipper the same color as the exterior cover, and contains a manual inflator only.)

NOTE

CFA for the LPFC (LPU-36/P) is Naval Air Warfare Center Aircraft Division, Patuxent River, MD 20670.

6-4. CONFIGURATION.

6-5. The LPU-36/P consists of multiple components compactly packed into an exterior cover assembly (casing assembly). The flotation assembly consists of two independent inflatable assemblies (bladders), each with an FLU-8B/P automatic/manual inflator and an oral inflation valve. The bladders are packed inside a black cloth inflation shell assembly. Four straps on the inflation shell assembly pass through grommets on the exterior cover assembly to attach the LPU-36/P to the modified torso harness or survival vest. Two additional straps adjust a plastic buckle which snaps across the wearer's chest to keep the LPU-36/P in position when worn. A beaded handle which connects to an inflation device is mounted on each side of the exterior cover assembly to initiate manual (primary) inflation of the life preserver.

6-6. INFLATION SHELL ASSEMBLY. The inflation shell assembly is a black cloth container which contains two independent inflatable bladders. Each heat sealed bladder is connected to a FLU-8B/P Inflator. The FLU-8B/P is a sealed, cartridge actuated automatic inflation device with primary manual inflation capability (figure 6-2). The device consists of a sensor housing and a body assembly into which a charged CO_2 cylinder, with an O-ring (seat seal gasket), is threaded. The sensor housing contains an electronic circuit which, when immersed in fresh or salt water, initiates automatic inflation of the life preserver. Each inflatable unit has a beaded handle connected to a lanyard. The lanyard is attached to the actuating lever of the inflation device to provide the manual inflation capability. An automatic inflation device is installed on the valve stem of each bladder of the inflation shell assembly. A cap nut secures the device and upper and lower pressure seal gaskets on the valve stem and also serves as a cap for the valve stem. Each inflator and CO_2 cylinder is wrapped in a protective cover. Oral inflation valve tubes are provided as backup to CO_2 cylinder inflation. (For more details on the FLU-8B/P, refer to NAVAIR 11-100-1.1.)

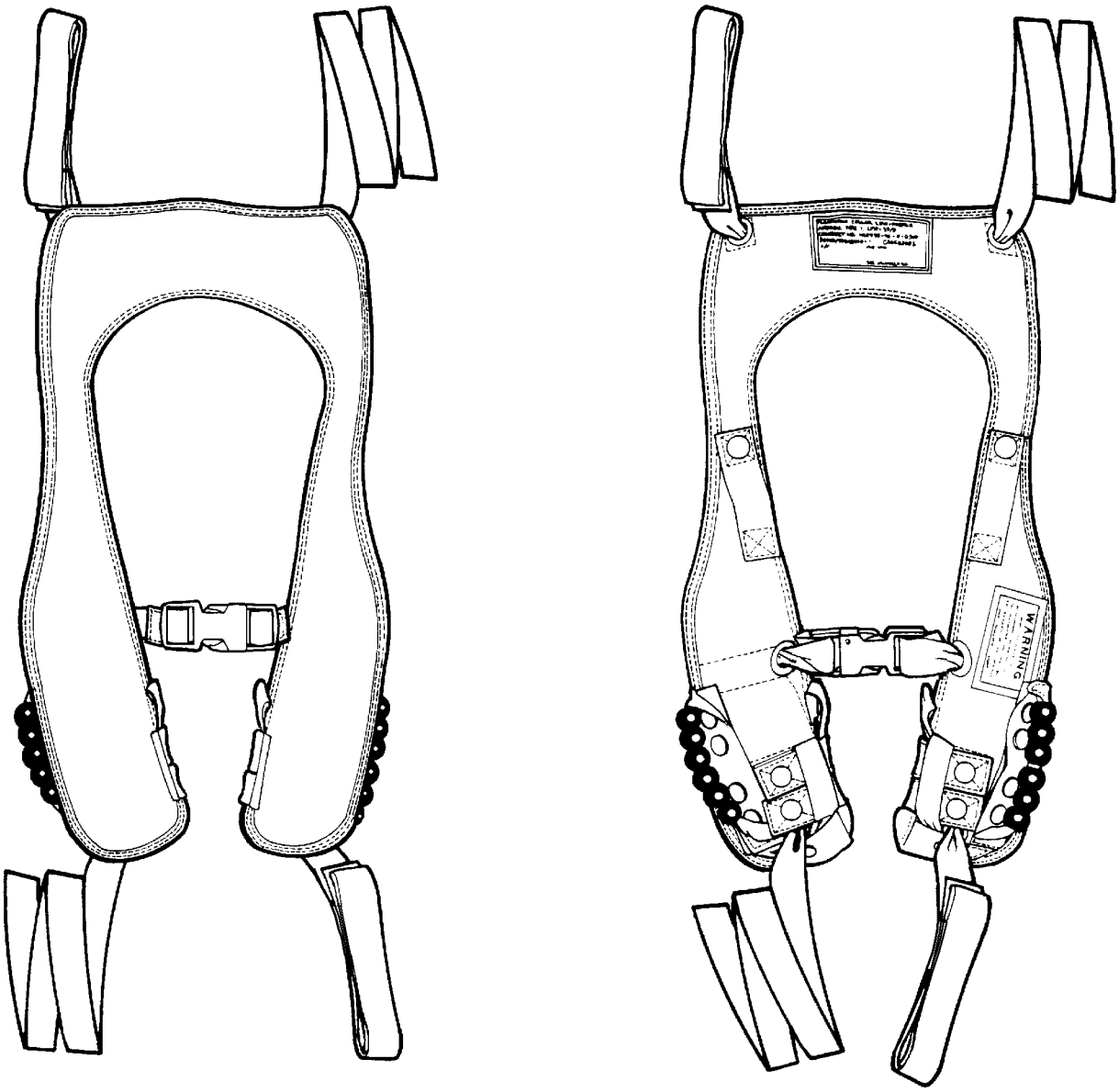

FRONT VIEW

BACK VIEW

006001

Figure 6-1. LPU-36/P, Life Preserver, Low Profile Floatation Collar (LPFC)

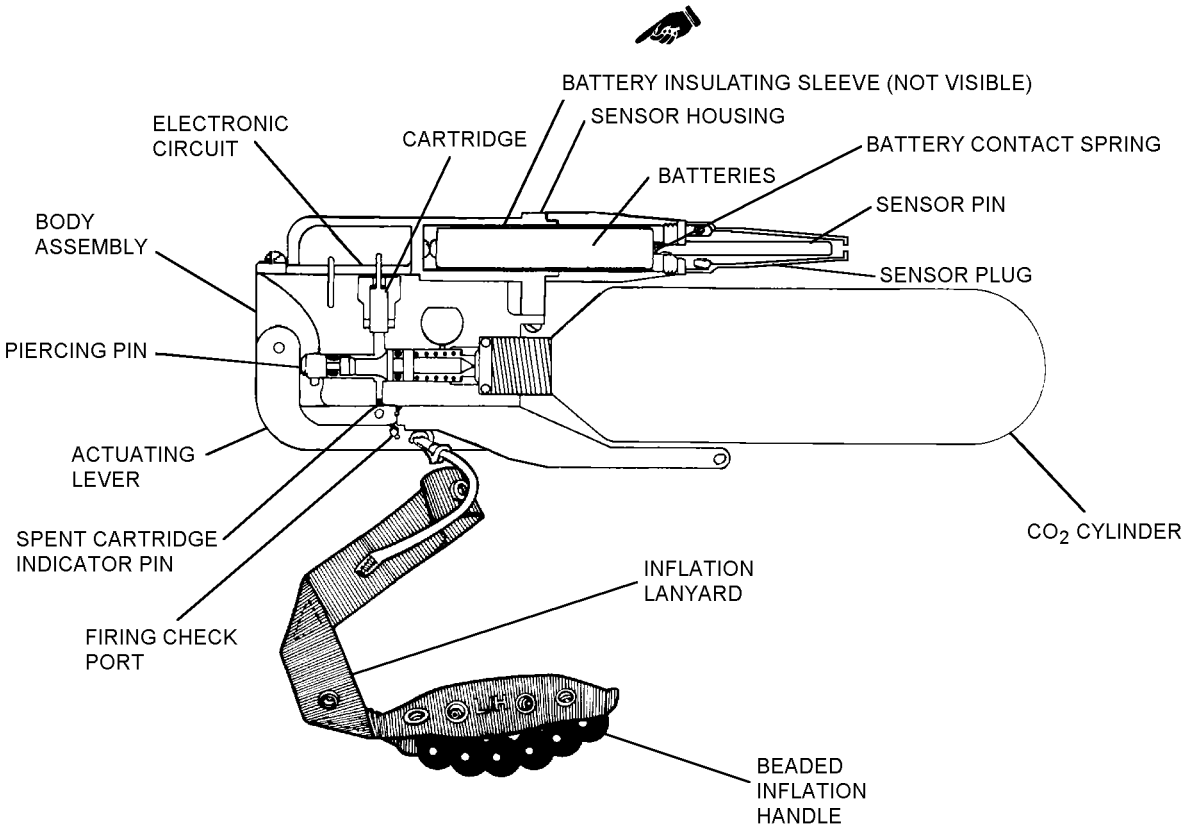

006002

Figure 6-2. Automatic Inflation Device, FLU-8B/P

6-7. APPLICATION.

6-8. The LPU-36/P is designated for constant wear only for aircrew personnel operating aircraft equipped with ejection seat systems.

6-9. FUNCTION.

6-10. The LPU-36/P is inflated either automatically, by immersion in fresh or salt water, or manually by pulling both beaded handles. The bladders inflate to provide head-out-of-water buoyancy.

6-11. The primary method of initiating inflation is the manual mode; pulling both beaded handles in a natural downward motion. Each beaded handle is connected by a lanyard to the actuating lever of the inflator. Pulling the handles initiates zipper separation on the exterior cover and causes the CO_2 cylinders to be punctured, inflating the bladders. The zipper securing the exterior cover continues to separate as the bladders inflate.

NOTE

The FLU-8B/P automatic inflation device may be operated in the manual mode an unlimited number of times without affecting its one-time automatic capability. After each manual inflation the spent CO_2 cylinders must be replaced and the CO_2 cylinder piercing pin inspected to ensure serviceability.

6-12. The automatic feature of the FLU-8B/P inflator serves as a backup to manual inflation. Automatic inflation is initiated when immersion in fresh or salt water activates an electronic circuit within the device to detonate an explosive primer (cartridge). Energy from the burning explosive forces the spent-cartridge indicator into the firing check port and simultaneously propels the piercing pin to puncture the CO_2 cylinder, inflating the bladder. The zipper securing the exterior cover separates as the bladder inflates.

6-13. Automatic inflation is a one-time function for the automatic inflation device (FLU-8B/P). After each activation in the automatic mode, the inflator must be replaced with a new one.

6-14. In an emergency situation, the oral inflation tubes may be used to top off the inflated bladders, maintain inflation of a leaky bladder, or inflate a bladder if an inflator malfunctions. The oral inflation tubes may also be used to inflate the bladders with air during an inspection test or to evacuate air during packing.

NOTE

The exterior cover must be manually opened prior to attempting to inflate the bladders using the oral inflation tubes.

Section 6-2. Modifications

6-15. GENERAL.

6-16. There are no modifications authorized on the LPU-36/P.

Table 6-1. LPU-36/P Directives

Description of Modification	Application	Modification Code
None		

Section 6-3. Maintenance

6-17. GENERAL.

6-18. This section contains information on LPU-36/P inspection, testing, cleaning, servicing, packing, and repair/replacement. Refer to table 6-2 for listing of repair/replacement actions.

6-19. INSPECTION.

6-20. The inspection requirements for the LPU-36/P Life Preserver shall include Place-In-Service, Preflight/Postflight, and 360-Day Special Inspections.

6-21. The Place-In-Service Inspection shall be performed on all life preservers in accordance with paragraph 6-25 prior to placing in service. The Place-In-Service Inspection shall be performed by qualified personnel at the intermediate level of maintenance. If inspection indicates required repair is beyond the capability of maintenance, complete appropriate forms in accordance with OPNAVINST 4790.2 Series and forward entire assembly to supply.

6-22. The Preflight/Postflight Inspection shall be performed prior to and after each flight by the aircrewmember to whom the life preserver is assigned.

NOTE

Due to a shortage of FLU-8B/P automatic inflators, the inspection cycle for the LPU-36/P should be adjusted to allow the longest possible use of the FLU-8B/P without exceeding the service life of the FLU-8B/P. The following applies, the remaining service life of the FLU-8B/P will determine the check cycle of the LPU-36/P: FLU-8B/P remaining service life: 6 to 11 months 180 day check cycle. FLU-8B/P remaining service life: 12+ months 360 day check cycle.

6-23. The 360-Day Special Inspection shall be performed once every 360 days after the LPU-36/P has been placed in service. The 360-Day Special Inspection shall be performed by qualified personnel at the Intermediate level of maintenance.

6-24. QUALITY ASSURANCE. The more critical procedures in this chapter are underlined to designate steps which require a Quality Assurance Inspection to assure performance of specific requirements. After the underlined step is performed by the Aircrew Survival Equipmentman, the procedure shall be verified before the next step is performed. This verification shall be performed by a Collateral Duty Inspector or Quality Assurance Representative (CDI, CDQAR, or QAR). Under no circumstances shall an Aircrew Survival Equipmentman perform his own Quality Assurance Inspection.

6-25. PLACE-IN-SERVICE INSPECTION. The Place-In-Service Inspection shall consist of the 360-Day Special Inspection (paragraph 6-27).

6-26. PREFLIGHT/POSTFLIGHT INSPECTION. The Preflight/Postflight Inspection shall be performed at the organizational level prior to and after each flight by the aircrewmember to whom the life preserver is assigned as follows:

WARNING

Ensure that the beaded inflation handles are readily accessible. Beaded inflation handles shall be secured with six snap fasteners.

CAUTION

Do not open any sealed or safety-tied portion of the life preserver for Preflight Inspection.

1. Inspect exterior cover for cuts, tears, deterioration, abrasions, stains, cleanliness, security of stitching, and other signs of damage.

2. Inspect snaps for secure attachment, corrosion, and ease of operation.

3. Inspect safety-ties on beaded handles. The safety-ties may be replaced without removing the life preserver from service. (Refer to paragraph 6-50, step 49.)

4. Inspect zipper closing for security throughout its length.

5. Inspect plastic buckles and buckle straps for proper operation and security. Buckles may be replaced without removing the life preserver from service.

6. Inspect identification and warning labels for secure attachment.

7. If any discrepancy is noted, the life preserver shall be returned to the Aviator's Equipment Branch for determination of maintenance action and disposition.

Table 6-2. LPU-36/P Common Repairs and Fabrications

Description	Paragraph Number
Replacement of FLU-8B/P FW14 Batteries	6-36
Replacement of FLU-8B/P Inflator	6-38
Replacement of pull the dot snap fasteners, attachment strap and exterior cover	6-39
Replacement of snap fasteners, beaded handle assembly and exterior cover	6-40

NOTE

Due to a shortage of FLU-8B/P automatic inflators, the inspection cycle for the LPU-36/P should be adjusted to allow the longest possible use of the FLU-8B/P without exceeding the service life of the FLU-8B/P. The following applies, the remaining service life of the FLU-8B/P will determine the check cycle of the LPU-36/P: FLU-8B/P remaining service life: 6 to 11 months 180 day check cycle. FLU-8B/P remaining service life: 12+ months 360 day check cycle.

6-27. 360-DAY SPECIAL INSPECTION. The 360-Day Special Inspection consists of the following:

1. Preflight Inspection (paragraph 6-26).

2. Inflation Shell Assembly Visual Inspection (paragraph 6-28).

3. Exterior Cover Assembly Visual Inspection (paragraph 6-29).

4. Functional Test (paragraph 6-43).

5. Deflation (paragraph 6-47).

6. Leakage Test (paragraph 6-45).

7. Battery Inspection (paragraph 6-33).

8. Battery Voltage Test (paragraph 6-44).

9. Markings Inspection (paragraph 6-30).

10. Bladder Visual Inspection (paragraph 6-31).

11. Automatic Inflation Device, FLU-8B/P Inspection (paragraph 6-32).

12. Automatic Inflation Device, FLU-8B/P Replacement (paragraph 6-38).

13. Installation of CO_2 Cylinders (paragraph 6-41).

14. Packing Procedures for LPU-36/P Life Preserver (LPFC) (paragraph 6-49).

15. Beaded Inflation Handle Pull Test (paragraph 6-46).

6-28. INFLATION SHELL ASSEMBLY VISUAL INSPECTION. To inspect the inflation shell assembly, proceed as follows:

1. Inspect fabric for cuts, tears, deterioration, abrasion, stains, and general cleanliness. If required, clean in accordance with paragraph 6-51.

2. Inspect seams, stitching, and reinforcement patches for condition and security.

3. Inspect zipper for security, stitching, and proper operation.

4. Inspect straps and loops for security and wear.

5. Inspect inflator covers for condition and security of hook and pile tape. Replace as required.

6. Inspect buckle for condition and proper operation. Replace if required.

7. If any component except the buckle or inflation covers is unserviceable, replace entire inflation shell assembly.

6-29. EXTERIOR COVER ASSEMBLY VISUAL INSPECTION. To inspect the exterior cover, proceed as follows:

1. Inspect fabric for cuts, tears, deterioration, abrasion, stains, and general cleanliness. If required, clean in accordance with paragraph 6-51.

2. Inspect seams and stitching for condition and security.

3. Inspect zipper for security, stitching, and proper operation.

4. Inspect elastic straps for security, stitching, and proper operation.

5. Inspect snaps for security of attachment, corrosion, damage, wear, and ease of operation.

6. Inspect uni-directional snap fastener assemblies for presence, security of attachment, proper orientation, ease of operation, corrosion, and wear.

NOTE

All uni-directional snap fasteners shall be installed with the dot on the button of the snap fastener socket positioned on the side of the snap fastener to which lift must be applied to disengage the socket from the snap fastener stud.

The two snap fasteners on the exterior cover shall be installed with the dot on each socket button positioned away from the sewn strap attachment.

7. Inspect grommets for security, corrosion, damage, and wear.

8. Inspect warning and identification labels for security.

9. If any component is unserviceable, replace entire exterior cover.

6-30. MARKINGS INSPECTION. To inspect and restore marking, proceed as follows:

Materials Required

Quantity	Description	Reference Number
As Required	Ink, Marking, Laundry, Black	SPE-92 NIIN 00-161-4229
	-or-	
As Required	Ink, Drawing, Waterproof, Yellow	A-A-59291 NIIN 00-634-6583

1. Compare markings on preserver to those listed in figure 6-3.

2. Restore faded markings as close to original position as possible.

3. Correct any markings which do not agree with the applicable table. Paint out old marking and enter new as close to proper position as possible.

6-31. BLADDER VISUAL INSPECTION. To inspect bladders, proceed as follows:

1. Inspect bladders for cleanliness, cuts, tears, punctures, deterioration and abrasions.

2. Check all seams for security.

3. Inspect valve stems for security, cross threading, and cleanliness.

4. Inspect oral inflation valves for cracks, security, ease of operation, and corrosion.

5. If any component of the bladder is unserviceable, replace entire bladder.

6-32. INSPECTION, AUTOMATIC INFLATION DEVICE, FLU-8B/P. Inspection of the FLU-8B/P Automatic Inflation Device is performed as follows:

1. Remove CO_2 cylinder from inflation device.

2. Examine inflation device and actuating lever for corrosion, security, stripped threads, CO_2 cylinder piercing pin for serviceability, and general condition.

a. If CO_2 cylinder piercing pin point is flat, rounded, or otherwise dull or damaged, the inflation device shall be replaced.

3. Check O-ring (seat seal gasket) for condition. Replace if necessary.

4. Operate actuating lever several times. Ensure lever moves freely and piercing pin moves properly inside valve body.

WARNING
LPFC contains an automatic inflator which is intended for use by an Aircrew in an ejection seat aircraft "ONLY"

FLOATATION COLLAR, LOW-PROFILE
AIRCREW, TYPE IA, LPU-36/P
CONTRACT NO: N68936-96-D-0300
30003/830AS260-1 CAGE:05DK2
S/N: MFG. DATE:

006003

Figure 6-3. LPU-36/P Markings

5. Check that silver indicator is not visible in firing indicator hole. If the silver indicator is visible, the inflator is spent and will not operate in the automatic mode. A new inflator shall be installed on the life preserver to replace the spent inflator. Refer to paragraph 6-38.

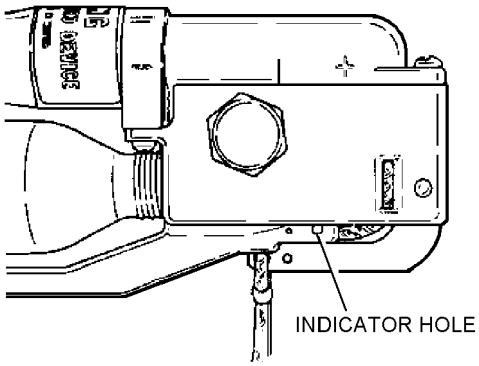

06032005

Step 5 - Para 6-32

NOTE

For data on total life of the FLU-8B/P automatic inflation assembly, refer to NAVAIR 11-100-1.1. If total life expiration date occurs before date of next scheduled 360-Day Special Inspection, replace inflator assembly.

Due to a shortage of FLU-8B/P automatic inflators, the inspection cycle for the LPU-36/P should be adjusted to allow the longest possible use of the FLU-8B/P without exceeding the service life of the FLU-8B/P. The following applies, the remaining service life of the FLU-8B/P will determine the check cycle of the LPU-36/P: FLU-8B/P remaining service life: 6 to 11 months 180 day check cycle. FLU-8B/P remaining service life: 12+ months 360 day check cycle.

6. Check records (OPNAVINST 4790.2 Series) for date of installation of each FLU-8B/P automatic inflator. For date of manufacture, refer to the manufacturer's identification plate of each FLU-8B/P inflator. See figure 6-4 for lot numbering system.

6-33. BATTERY INSPECTION. The FW14, 6-volt, Manganese Dioxide batteries are the only batteries currently authorized for use in the FLU-8B/P. Visually inspect FLU-8B/P Inflator batteries as follows:

NOTE

Only FW14 batteries, part number 849AS103, NIIN 01-334-0724, requisitioned through the CAD/PAD ordering process are authorized for use in the FW98 Automatic Inflation Device. NAVSURFWARCENDIV, Indian Head, MD must approve substitute batteries in writing before installation.

Materials Required

Quantity	Description	Reference Number
As Required	Battery, 6-volt, Manganese Dioxide (FW14)	849AS103 (CAGE 30003) NIIN 01-334-0724
1	Sleeve, Battery Insulating	1122-095 (Note 1)

Notes: 1. The battery insulating sleeve is not stocked by supply. All new FLU-8B/P units come with the sleeve installed. If a sleeve is required, contact Indian Head Division, NSWC.

Support Equipment Required

Quantity	Description	Reference Number
1	Multimeter (Digital)	8600A or equivalent (CAGE 89536) NIIN 01-010-0088
1	Wrench, 3/4-Inch	—

6-34. Removal. Remove FLU-8B/P batteries as follows:

WARNING

Do not insert any object into sensor plug side ports for any reason at any time.

1. Remove CO_2 cylinder.

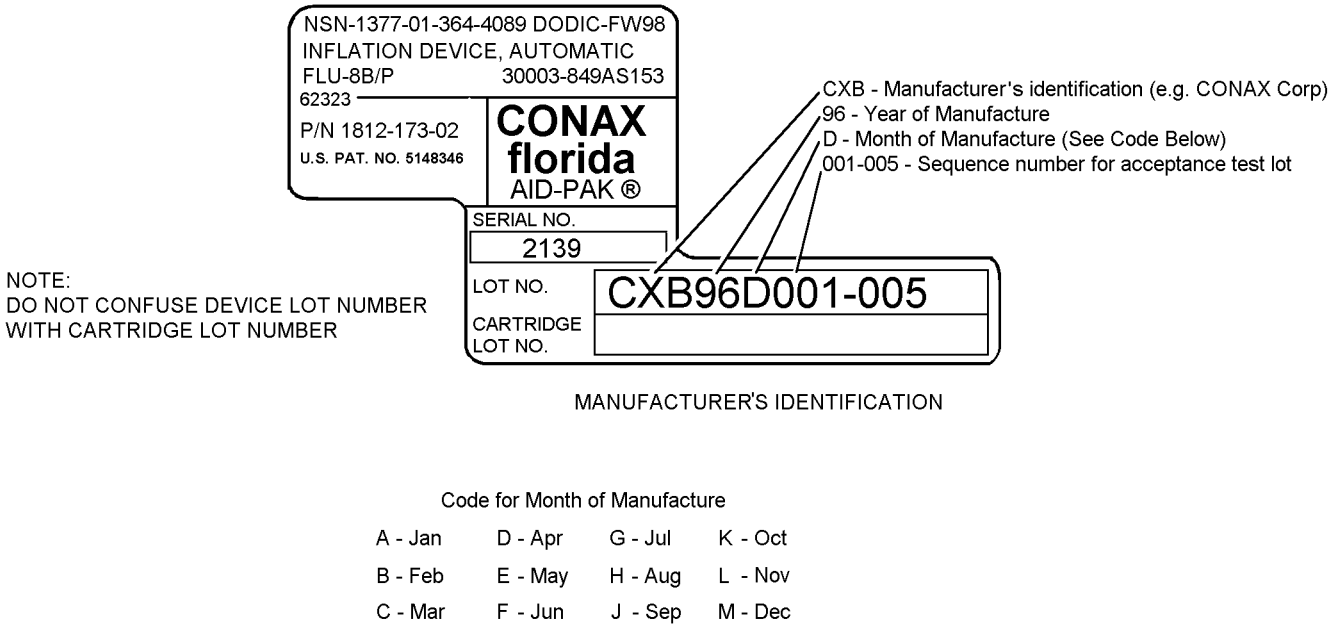

Figure 6-4. Lot Numbering System for FLU-8B/P Automatic Inflators

2. Remove sensor plug cap using a 3/4-inch socket and wrench.

3. Check sensor plug cap for cracks.

4. Remove batteries and check for the following: leakage, corrosion, dents, depressions and cracks. If found, the batteries shall be rejected.

4A. Inspect end of battery insulating sleeve that protrudes from battery compartment for cracks/tears. Replace battery insulating sleeves that have cracks and tears that continue into the battery compartment. Small defects that do not travel into the wall of the battery compartment are acceptable.

5. Using multimeter set-up to measure dc voltage, check each battery for shorted casing. Place one lead on the positive terminal and the other on the battery case. If a voltage reading of 0.1 volts dc or higher is obtained, reject the battery for use and discard in an appropriate manner.

6. Check date of manufacture stamped on the battery (see NAVAIR 11-100-1.1 for details). Also check records for date of installation recorded in accordance with OPNAVINST 4790.2 Series.

NOTE

The total service life of the FW14 battery is three years from date of manufacture. If the total service life date of a battery expires prior to the next scheduled inspection, both batteries shall be replaced.

6-35. Reinstall. If FLU-8B/P batteries meet requirements for continued use, reinstall as follows:

1. Inspect condition of sensor plug cap O-ring and install on battery housing.

2. Ensure date of installation and date of manufacture are recorded on appropriate form in accordance with OPNAVINST 4790.2 Series.

3. Reinstall batteries in accordance with figure 6-5.

CAUTION

Do not over torque sensor plug cap. Proper torque is 15 in-lb. Over torque could cause damage to sensor plug cap.

4. Reinstall sensor plug cap. Torque cap to 15 in-lb using 3/4-inch socket and torque wrench.

5. Test batteries in accordance with paragraph 6-44.

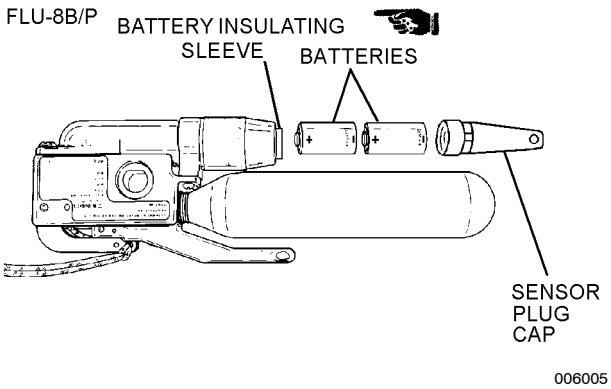

Figure 6-5. Battery Installation Arrangement

6-36. Replacement. If installed batteries are to be replaced, proceed as follows:

NOTE

Only FW14 batteries, part number 849AS103, NIIN 01-334-0724, requisitioned through the CAD/PAD ordering process are authorized for use in the FW98 Automatic Inflation Device. NAVSURFWARCENDIV Indian Head MD must approve substitute batteries in writing before installation.

WARNING

Do not attempt to recharge old batteries or dispose of in fire, batteries may explode.

CAUTION

Never replace one battery. Always replace the pair.

NOTE

Refer to NAVAIR 11-100-1.1 for details of date coding. Replace both batteries if expiration date of either battery will occur prior to the next 360-Day Special Inspection.

Ensure date of installation and date of manufacture of replacement batteries are recorded on appropriate form in accordance with OPNAVINST 4790.2 Series. See figure 6-5 for proper battery arrangement.

1. Remove old batteries in accordance with paragraph 6-34 and dispose of in accordance with local regulations.

2. Inspect sensor plug cap O-ring for condition and install on battery housing.

3. Refer to NAVAIR 11-100-1.1 for battery manufacture code dates. Record date of manufacture and date of installation of new batteries in accordance with OPNAVINST 4790.2 Series.

4. Check new batteries for leakage, corrosion, dents, depressions, and cracks. If found, the batteries shall be rejected.

5. Using multimeter set-up to measure dc voltage, check each battery for shorted casing. Place one lead on the positive terminal and the other on the battery case. If a voltage reading of 0.1 volts dc or higher is obtained, reject the battery for use and discard battery in an appropriate manner.

6. Install batteries in accordance with figure 6-5.

CAUTION

Overtorque could cause damage to sensor plug cap. Proper torque is 15 in-lb.

7. Reinstall sensor plug cap. Torque cap to 15 in-lb using 3/4-inch socket and torque wrench.

8. Test batteries in accordance with paragraph 6-44.

6-37. REPAIR/REPLACEMENT.

6-38. REPLACEMENT OF FLU-8B/P AUTOMATIC INFLATOR. To replace damaged, overage, or spent FLU-8B/P automatic inflator, proceed as follows:

Materials Required

Quantity	Description	Reference Number
1	Cylinder, CO_2 Type III, 35-Gram	MIL-C-25369C
1	FLU-8B/P Automatic Inflation Device	849AS153 (CAGE 30003) NIIN 01-364-4089
1	Valve Stem Kit (Note 1)	105AS100-6 (CAGE 30003) NIIN 00-113-8290
1	Seat Seal, O-Ring, Multi	NIIN 01-046-3300
1	Sleeve, Battery Insulating (Note 2)	1122-095

Notes: 1. Valve Stem Kit, P/N 105AS100-6, NIIN 00-113-8290, contains one top and one bottom gasket.

2. The battery insulating sleeve is not a stocked item. After installation directed by Aircrew Systems Bulletin 976, it becomes part of the FLU-8B/P Unit. Replacement sleeves are issued by Indian Head Division, NSWC.

WARNING

The FLU-8B/P automatic inflator is a cartridge-activated device and will fire if immersed in fresh or salt water. This device is to be installed only on life preservers used by aircrewmembers in aircraft with ejection seat systems.

NOTE

The following FLU-8B/P component parts may be reused and retained as spares: sensor plug cap, batteries, battery insulating sleeve, CO_2 cylinder, and cap nut.

1. Remove cap nut using a 3/4-inch socket and wrench.

2. Remove inflator from valve stem.

3. Remove CO_2 cylinder from inflator.

4. Remove inflation lanyard from activating lever.

5. Remove and inspect batteries in accordance with paragraph 6-33.

6. Dispose of damaged or spent FLU-8B/P inflator in accordance with Federal Regulation 49, CFR 173.55.

7. Dispose of used top and bottom gaskets.

8. Inspect replacement FLU-8B/P in accordance with paragraph 6-32.

NOTE

Ensure packing cord loop is removed. The LPU-36/P does not require use of packing cord.

9. Attach the inflation lanyard to the inflator actuating lever using a lark's head knot.

10. Reinstall batteries in accordance with paragraph 6-35. If new batteries are required, replace in accordance with paragraph 6-36.

WARNING

Ensure gaskets are properly positioned. The top gasket has a larger internal diameter than the bottom gasket.

11. Install new gaskets from gasket kit by placing gasket with smaller inside diameter on valve stem first.

12. Carefully install inflator, with lanyard and beaded handle attached, onto the valve stem.

NOTE

Inflator lever shall face outboard.

13. Install gasket with larger inside diameter onto valve stem.

14. Tighten cap nut on valve stem and torque to a value of 15 to 16 in-lb.

CAUTION

Check to ensure there is no trapped cloth material to cause binding and restrict movement of inflator.

15. Grasp the 2-inch diameter reinforcement patch located under the inflator in one hand and the inflator in the other. Holding the patch firmly, rotate the inflator clockwise and counterclockwise. The inflator should rotate at least 1/4 turn in either direction without restriction. If inflator does not bind, proceed to step 16. If inflator is binding, remove cap nut, inflator and both top and bottom gaskets. Discard gaskets and repeat steps 11 thru 15.

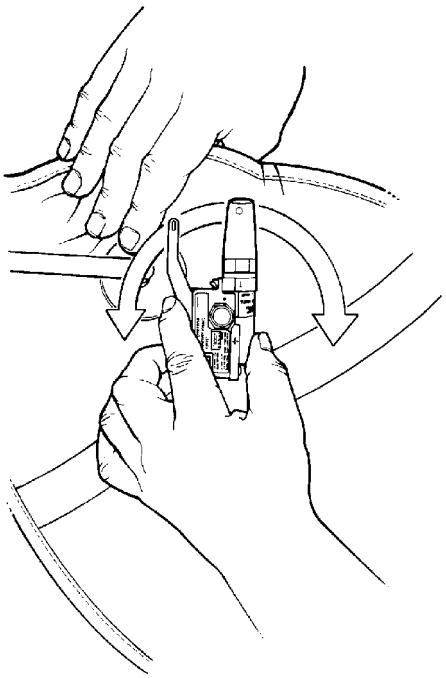

Step 15 - Para 6-38

NOTE

FLU-8B/P comes with seat seal O-ring installed for CO_2 cylinder installation.

16. Ensure seat seal O-ring is in place.

17. Ensure CO_2 cylinder has been inspected in accordance with paragraph 6-41.

18. Install CO_2 cylinder, MIL-C-25369C Type III, hand tight. See paragraph 6-41 for details of CO_2 cylinder installation.

19. Insert oral inflation tube through hole in upper portion of protective cover and into retaining loop attached to inflation shell assembly. Install inflator protective cover behind and around inflator and CO_2 cylinder. Close protective cover and secure with hook and pile fastener.

20. Check larks head knot for security and proper routing. Check CO_2 cylinder for tightness.

21. Make necessary entries on appropriate forms in accordance with OPNAVINST 4790.2 Series including.

a. Date of installation of each FLU-8B/P.

b. Date of manufacture of each FLU-8B/P (figure 6-4).

c. Lot number of each FLU-8B/P (figure 6-4).

d. Serial number of each FLU-8B/P.

e. Date of installation of batteries.

f. Date of manufacture of batteries (paragraph 6-34).

6-39. REPLACEMENT OF THE PULL THE DOT SNAP FASTENERS, EXTERIOR COVER ASSEMBLY AND ATTACHMENT STRAP. To replace pull the dot snap fasteners used to secure the attachment straps to the exterior cover proceed as follows:

Materials Required

Quantity	Description	Reference Number
As Required	Cap, Snap Fastener	MS27983-1 NIIN 00-891-9073
As Required	Socket, Snap Fastener	MS27983-2 NIIN 00-945-2577
As Required	Stud, Snap Fastener	MS27983-3 NIIN 00-276-4908
As Required	Eyelet, Snap Fastener	MS27983-4 NIIN 00-276-4978

1. Remove damaged fastener from cover or attachment strap, using care not to damage cover or webbing.

NOTE

Exterior cover assembly shall be replaced if structural damage occurs during fastener removal or is found after fastener removal.

2. Install new fasteners at existing location as required, ensure pull the dot is installed facing up, nearest top of collar.

6-40. REPLACEMENT OF SNAP FASTENERS, BEADED HANDLE ASSEMBLY AND EXTERIOR COVER. To replace snap fasteners used to secure the beaded handle assembly to the exterior cover assembly proceed as follows:

Materials Required

Quantity	Description	Reference Number
As Required	Cap, Snap Fastener	MS27981-1B NIIN 00-276-4954
As Required	Socket, Snap Fastener	MS27981-3B NIIN 00-276-4966
As Required	Stud, Snap Fastener	MS27981-4B NIIN 00-901-9660
As Required	Post, Snap Fastener	MS27981-5B NIIN 00-250-6858

1. Remove damaged fastener from cover or beaded handle assembly, using care not to damage cover or handle webbing.

NOTE

Exterior cover or beaded handle assembly shall be replaced if structural damage occurs during fastener removal or if found after fastener removal.

2. Install new fasteners at existing location as required.

6-41. INSTALLATION OF CO_2 CYLINDERS. To install CO_2 cylinders proceed as follows:

Support Equipment Required

Quantity	Description	Reference Number
1	Scale (Gram)	A-A-52021-1 NIIN 00-514-4117 or equivalent
1	Die, Cylinder Thread Chaser	1842-008-01 (CAGE 03688) NIIN 01-069-4040

Materials Required

Quantity	Description	Reference Number
As Required	Cylinder, CO_2 Type III, 35-Gram	MIL-C-25369C
As Required	Seat Seal, O-Ring, Multi	NIIN 01-046-3300

1. Weigh a charged CO_2 cylinder and compare the minimum stamped weight with the scale weight. Discard and replace cylinder if scale weight is 2 grams less than minimum stamped weight.

2. To assure a firm cylinder seat, conduct a cylinder thread count. The threaded portion of the cylinder neck shall contain a minimum of seven full threads to assure a firm cylinder seat within inflator body. Any cylinder with less than seven full threads shall be discarded (figure 6-6).

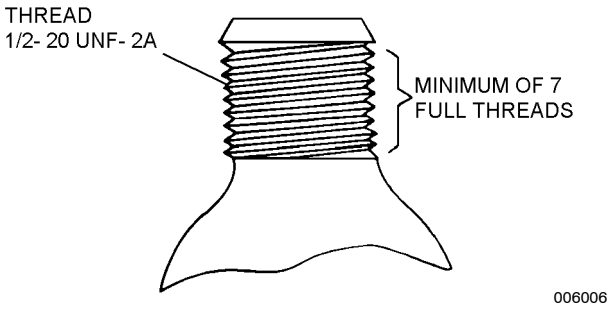

Figure 6-6. Cylinder Thread Count

CAUTION

Steel threads on CO_2 cylinder can cause damage to aluminum threads on inflator if cylinder is not carefully threaded. If binding occurs during installation of cylinder, use thread chaser die on cylinder thread to cut free excessive plating. Reinstall cylinder. If binding still occurs, replace cylinder.

3. Using the cylinder thread chaser die, turn the die to the full extent of the threads on the CO_2 cylinder to cut free any excessive plating covering the threads.

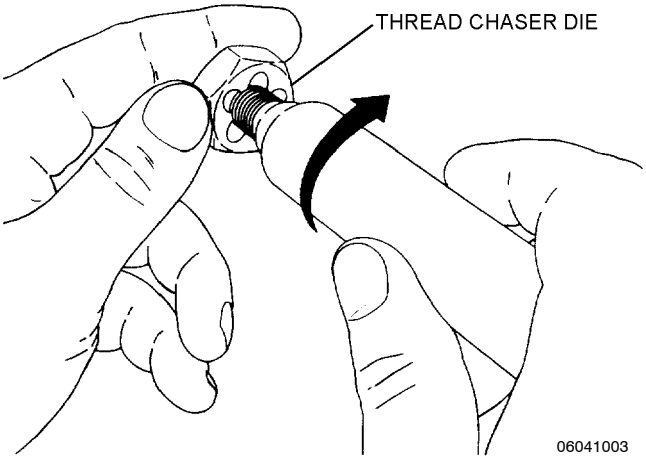

Step 3 - Para 6-41

NOTE

Inspect condition of seat seal gasket and replace as necessary. After each functional check, the seat seal gasket shall be replaced.

4. Remove old seat seal gasket if damaged or if a functional test has been performed.

5. Install new seat seal gasket and carefully thread CO_2 cylinder into inflator body hand tight.

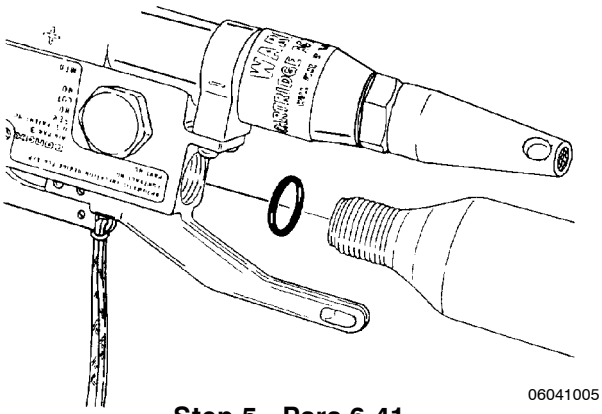

Step 5 - Para 6-41

6. Check for secure cylinder fit.

6-42. TESTING.

6-43. FUNCTIONAL TEST. The Functional Test shall be performed prior to placing LPU-36/P in service, every 360-Day Special Inspection, and when a bladder is replaced. The Functional Test is performed as follows:

CAUTION

Ensure work area surrounding preserver is free of foreign objects.

1. Open exterior cover. Carefully separate zipper by hand, starting at the zipper opening on either side of external cover.

2. Unfold inflation shell assembly.

CAUTION

The functional test for LPU-36/P life preserver shall be performed manually. Automatic actuation of the FLU-8B/P automatic inflator is a one-time function and requires replacement of the spent unit. The FLU-8B/P inflator can be operated manually an unlimited number of times. However, after each manual operation the O-ring and CO_2 cylinder must be replaced (paragraph 6-41), and the CO_2 cylinder piercing pin shall be inspected for serviceability (paragraph 6-32).

3. Perform beaded handle pull test in accordance with paragraph 6-46.

4. Actuate manual inflation assemblies.

5. The life preserver shall fully inflate to design shape, without evidence of restriction, in less than 30 seconds.

6. If the life preserver does not properly inflate, determine cause. Ensure stem and valve are clean and free of foreign matter.

7. If correction is made, the life preserver shall be functionally tested again.

8. Deflate life preserver in accordance with paragraph 6-47 to remove all CO_2.

6-44. BATTERY VOLTAGE TEST. To test batteries, proceed as follows:

CAUTION

Do not use analog (needle) voltage multimeter. Use digital reading voltage multimeter. Ensure that the multimeter has a minimum of 10 megohms input impedance.

Support Equipment Required

Quantity	Description	Reference Number
1	Multimeter (Digital)	8600A or equivalent (CAGE 89536) NIIN 01-010-0088

WARNING

Ensure multimeter is set in voltage measuring mode and not the resistance measuring mode. In the resistance measuring mode, a resistance measurement will trigger the squib and fire the inflator. The inflator will also fire if any conductive material makes contact between the sensor pin and any conductive surface of the inflator device.

Do not touch the inflator with your bare hands or any conductive material while performing this test. Faulty readings may be obtained, or the squib may be fired if the body becomes an electrical pathway between the sensor pin and any conductive part of the inflator assembly.

1. Prepare multimeter for voltage test.

a. Provide the positive (+) test lead with a standard test probe (1/16-inch size) on a standard handle (3 to 4 inch nominal length).

b. Provide negative (-) test lead with a banana type test plug (1/8-inch size) on a short handle (1-inch nominal length).

c. Adjust tension on ribs of banana plug so when inserted into a sensor plug end port (7/16-inch nominal depth) the weight of the test lead will not withdraw the plug.

NOTE

Use an undamaged, uninstalled sensor plug for verification. Do not use an inflator with batteries installed.

2. Insert negative (-) test probe into the end port of the sensor plug. Remove hand. Using the pointed positive (+) probe, touch and maintain contact with one of the screw heads near the lever end of the inflator.

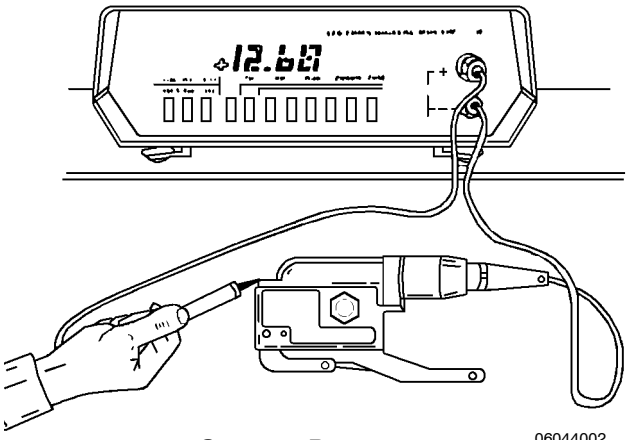

Step 2 - Para 6-44

3. Wait 15 seconds for FLU-8B/P circuits to stabilize after connecting the test leads before taking voltage reading.

WARNING

The voltage reading should begin at a high value and then gradually shift downward (0.15 volts typical) before final stabilization. If no downward shift in meter reading occurs, or if the shift continues steadily downward more than 1.0 volt during battery test, the FLU-8B/P inflator shall be rejected.

4. Interpret battery test readings and respond as indicated below:

a. A reading of +12.0 volts or more indicates the batteries are at full power and correctly installed.

b. If a reading is below +12.0 volts, with the batteries properly installed, replace batteries and repeat test.

c. A reading of zero volts indicates one battery is inserted backwards, battery contact is faulty, one or both batteries are discharged, or batteries are not installed. Inspect and correct. Repeat test.

d. A reading of less than zero volts indicates that both batteries are installed backwards or that the multimeter leads are reversed. Inspect and correct. Repeat test.

e. If a correct battery voltage reading cannot be obtained with batteries of verified full charge and properly installed, the inflator shall be considered defective and shall be rejected. Report rejected inflator for engineering investigation in accordance with OPNAVINST 4790.2 Series.

NOTE

The same multimeter and test leads may be used to test uninstalled batteries, singly or in pairs. Voltage readings will be slightly higher and will not drift downward when testing outside the inflator.

5. If batteries need to be rearranged or replaced, refer to Battery Inspection procedures, paragraph 6-33.

6. After rearranging or replacing batteries, repeat Battery Voltage Test.

6-45. LEAKAGE TEST. The LPU-36/P shall be subjected to a Leakage Test each 360-Day Special Inspection. To perform a Leakage Test, proceed as follows:

Support Equipment Required

Quantity	Description	Reference Number
1	Test Fixture (or equivalent)	Fabricate in accordance with Chapter 13.

CAUTION

Ensure test area is free of foreign objects.

1. Ensure all carbon dioxide has been removed from any preserver which has been functionally tested.

2. Remove LH and RH inflator assemblies and discard gaskets.

3. Unzip inflation shell assembly and remove top and bottom bladders from shell.

CAUTION

If 3-way valve is not used, measuring device valve must be closed when air feed valve is open. Damage may occur to oral inflation valve if air supply pressure entering the life preserver exceeds 10 psi during this test.

NOTE

Refer to figure 6-7, Leakage Test Fixture Schematic. If test fixture meeting requirements indicated is not available, one may be fabricated in order to perform required leakage test.

If a suitable air source is not available, water-pumped nitrogen (BB-N-411) may be substituted.

4. Unlock oral inflation valve and connect to test fixture. Rotate valve to air supply position and inflate bladder. Alternately position valve between measuring device, vent, and air supply until proper pressure of 3.25 psig is attained.

5. Securely shut off the air supply. Then after allowing a minimum of 15 minutes for pressure to stabilize, the pressures shall be readjusted, as necessary, to the leakage test pressures. After ensuring proper test pressures, record time.

6. Disconnect air supply and check for leaks. Ensure all valves are closed.

7. Record temperature and barometric pressure (figure 6-8).

8. After a minimum of 1 hour after completing step 5, record test pressure of both bladders. Test pressure of each bladder shall not decrease to less than 2.50 psig for a life preserver bladder, from a maximum test pressure of 3.25 psig.

9. Record temperature and barometric pressure. Correct the test pressure for any changes in temperature and barometric pressure (tables 6-3 and 6-4).

CAUTION

Do not submerge life preservers in water to check for leaks.

10. If pressure of bladder is below 2.50 psig, inflate to correct leakage test pressure and coat bladder with a soap solution to determine if a leak exists. If a leak exists, replace bladder. If no leak is found, check test fixture.

11. Deflate bladders in accordance with paragraph 6-47.

12. Reassemble preserver and pack in accordance paragraph 6-49.

13. Records Updating. Make necessary entries on appropriate form in accordance with OPNAVINST 4790.2 Series.

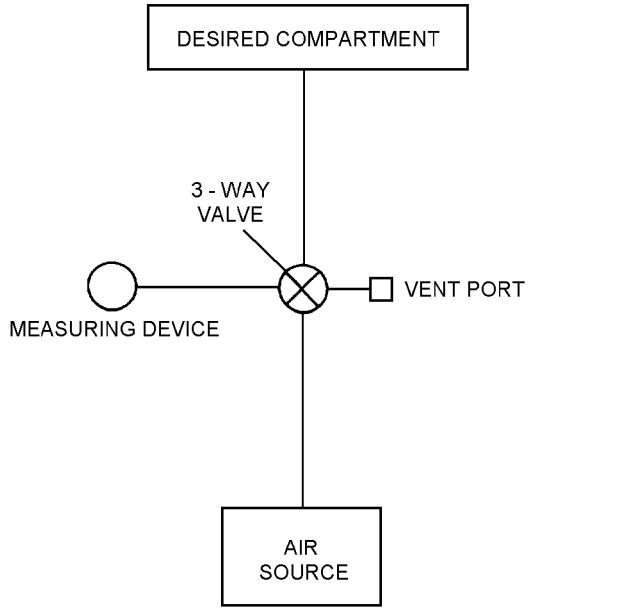

Figure 6-7. Leakage Test Fixture Schematic

Table 6-3. Temperature Conversion Chart

Temperature Difference (°F)	Correction (psi)
1	0.031
2	0.062
3	0.093
4	0.124
5	0.155
6	0.186
7	0.217
8	0.248
9	0.279
10	0.310
Rise in temperature: subtract from gage reading. Fall in temperature: add to gage reading.	

EXAMPLE

UNCORRECTED TEST READING 1.70 PSI

	TEMP.	BARO.
START	75° F	29.90 inHg
END	70° F	29.70 inHg
DIFFERENCE	-5° F	-0.200
CORRECTION	+0.155	-0.098

TEMP. CORRECTION	+0.155
+BARO. CORRECTION	-0.098
CORRECTION	+0.057
UNCORRECTED READING	1.700 PSI
+CORRECTION	+0.057
CORRECTED READING	1.757 PSI

Figure 6-8. Temperature and Barometric Pressure Test Record

Table 6-4. Barometric Pressure Conversion Chart

Press. Diff. (inHg)	Corr. (psi)	Press. Diff. (inHg)	Corr. (psi)	Press. Diff. (inHg)	Corr. (psi)	Press. Diff. (inHg)	Corr. (psi)	Press. Diff. (inHg)	Corr. (psi)
0.01	0.005	0.16	0.078	0.31	0.152	0.46	0.225	0.61	0.299
0.02	0.010	0.17	0.083	0.32	0.157	0.47	0.230	0.62	0.304
0.03	0.015	0.18	0.088	0.33	0.162	0.48	0.235	0.63	0.309
0.04	0.020	0.19	0.093	0.34	0.167	0.49	0.240	0.64	0.314
0.05	0.025	0.20	0.098	0.35	0.172	0.50	0.245	0.65	0.319
0.06	0.030	0.21	0.103	0.36	0.176	0.51	0.250	0.66	0.323
0.07	0.035	0.22	0.108	0.37	0.181	0.52	0.254	0.67	0.328
0.08	0.040	0.23	0.113	0.38	0.186	0.53	0.260	0.68	0.333
0.09	0.045	0.24	0.118	0.39	0.191	0.54	0.265	0.69	0.338
0.10	0.049	0.25	0.123	0.40	0.196	0.55	0.270	0.70	0.343
0.11	0.054	0.26	0.127	0.41	0.201	0.56	0.275	0.71	0.348
0.12	0.060	0.27	0.132	0.42	0.206	0.57	0.279	0.72	0.353
0.13	0.064	0.28	0.137	0.43	0.211	0.58	0.284	0.73	0.358
0.14	0.069	0.29	0.142	0.44	0.216	0.59	0.289	0.74	0.363
0.15	0.073	0.30	0.147	0.45	0.221	0.60	0.294	0.75	0.368

Rise in pressure: add to gage reading.
Fall in pressure: subtract from gage reading.

6-46. BEADED INFLATION HANDLE PULL TEST. To perform the beaded inflation handle pull test, proceed as follows:

1. Manually release beaded handles.

2. If snap fasteners do not release, inspect male and female snap fasteners for damage. Replace entire beaded inflation handle if required and repeat step 1. Replace exterior cover if required.

3. Attach gauge to webbing between third and fourth bead on inflation handle.

4. Hold inflation lanyard securely against exterior cover to ensure life preserver actuating lever will not be pulled.

5. Add a 25-pound force to check the security of the beaded handle attachment to the inflation lanyard.

6. Examine lanyard for frays, ruptures, thin spots, and security. If unsatisfactory, replace entire beaded inflation handle.

6-47. DEFLATION.

6-48. To deflate the life preserver, proceed as follows:

Support Equipment Required

Quantity	Description	Reference Number
1	Pump, Rotary Vacuum (or equivalent)	1397B-01 NIIN 00-052-5015
As Required	Hose, 3/8- or 1/2-inch Inside Diameter, Rubber	—

1. Lay bladders/inflation shell assembly on a flat surface. Smooth bladder/inflation shell assembly toward oral inflation tube.

CAUTION

Ensure all air is removed from bladder to prevent possible expansion of trapped air with increasing altitude and for ease of packing.

2. Apply a vacuum to remove all air through oral inflation tube. (Bladder should be wrinkled/puckered around oral inflation tube when all air has been removed.)

3. Turn oral inflation valve locking nut to lock position to ensure no air returns to the bladder.

6-49. PACKING PROCEDURES FOR LPU-36/P LIFE PRESERVER (LPFC).

6-50. Pack the LPU-36/P life preserver as follows:

Support Equipment Required

Quantity	Description	Reference Number
6	Spring Clamps (packing aids) (Note 1)	P/N 3201-HT
4	Bladder Assembly Keeper (packing aids)	P/N 101202 NIIN 01-469-9567
1	Zipper Slide Assembly (packing aid)	P/N 101201 NIIN 01-467-6537
1	Pump, Rotary Vacuum	1397B-01 NIIN 00-052-5015 (or equivalent)
As Required	Hose, 3/8 or 1/2-inch, Inside Diameter, Rubber	—
1	Needle	—

Notes: 1. The plastic tips of Spring Clamps (packing aids) may become loose and become FOD hazard. To correct and prevent this condition, remove plastic tips from clamp, coat metal tip of clamp with adhesive (MIL-A-5540A), and reinstall plastic tips while adhesive is still tacky. Spring Clamp is available through GSA (www.gsaadvantage.gov).

Materials Required

Quantity	Description	Reference Number
As Required	Thread, Nylon, Size E	P/N V-T-295 NIIN 00-204-3884
2	Valve Stem Kit (Note 1)	P/N 105AS100-6 (CAGE 30003) NIIN 00-113-8290

Notes: 1. Valve Stem Kit, P/N 105AS100-6, NIIN 00-113-8290, contains one top and one bottom gasket.

NOTE

Reference to LH and RH refers to wearer's left hand and right hand orientation.

The LPU-36/P does not use a packing cord with the FLU-8B/P.

1. Ensure life preserver has received Place-In-Service inspection in accordance with paragraph 6-25.

2. Remove air from inner inflatable assembly (110230-1) and outer inflatable assembly (110240-1). Lay each assembly on a flat surface. Smooth bladder toward oral inflation tube. Apply a vacuum to remove all air through oral inflation tube. Turn locking nut to lock position to ensure that no air returns to inflation assembly.

3. Place inner inflatable assembly (110230-1) (with oral inflator on LH side) into inflation shell assembly (110221-1) through the zipper openings. Insert valve stem and oral inflation tube through respective holes in inflation shell assembly. Work wrinkles out until bladder is smooth and flat.

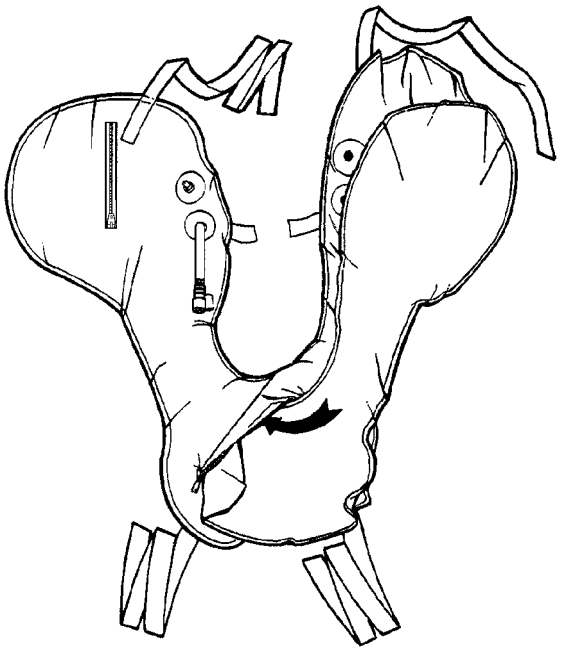

06050003

Step 3 - Para 6-50

4. Place outer inflation shell assembly (110240-1) (with oral inflator on RH Side into inflation shell assembly in the same manner as step 3.

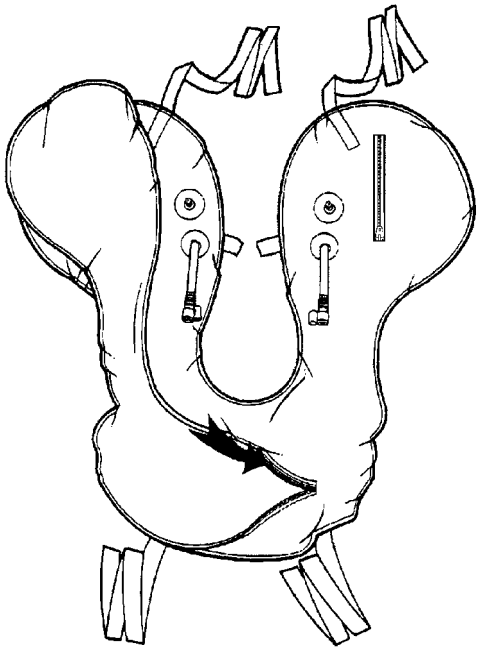

06050004

Step 4 - Para 6-50

5. Zip the inflation shell assembly closed. (3 places).

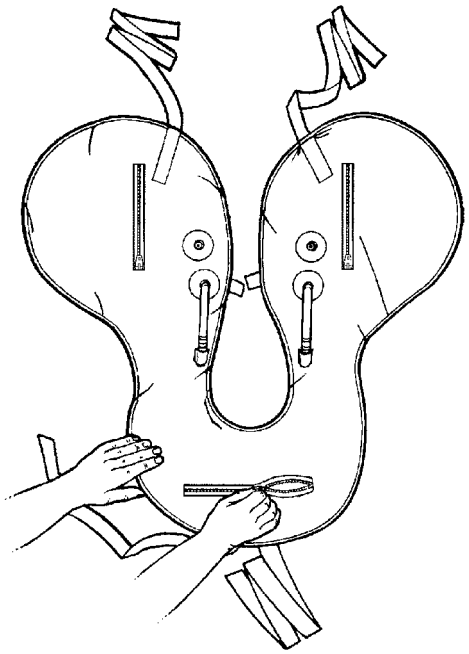

06050005

Step 5 - Para 6-50

NOTE

Ensure packing cord loop is removed. The LPU-36/P does not require use of packing cord with the FLU-8B/P.

6. Attach the black portion of the inflation lanyard on the LH beaded handle (110251-1) to the FLU-8B/P using a lark's head knot. Repeat for the RH beaded handle (110251-2).

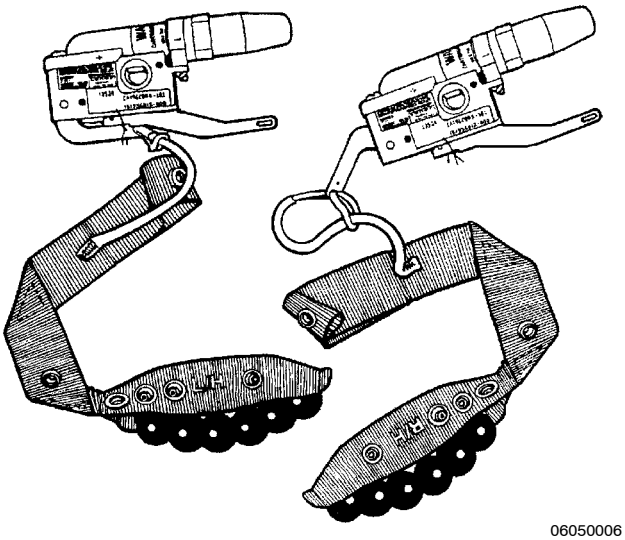

06050006

Step 6 - Para 6-50

WARNING

Ensure gaskets are properly positioned. The upper gasket has a larger internal diameter than the lower gasket.

7. Intall new gaskets from gasket kit by placing lower gasket (105AS100-4 from gasket kit) on the valve stem first.

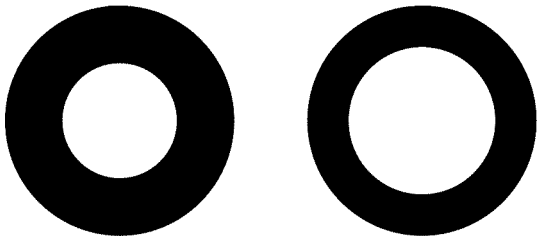

LOWER GASKET UPPER GASKET

06050007

Step 7 - Para 6-50

WARNING

Inflator lever shall face outboard. Activation arm will pull downward.

8. Carefully install FLU-8B/P with LH beaded handle onto the LH valve stem. Carefully install FLU–8B/P with RH beaded handle onto the RH valve stem.

9. Install upper gasket (105AS100-3) onto valve stem.

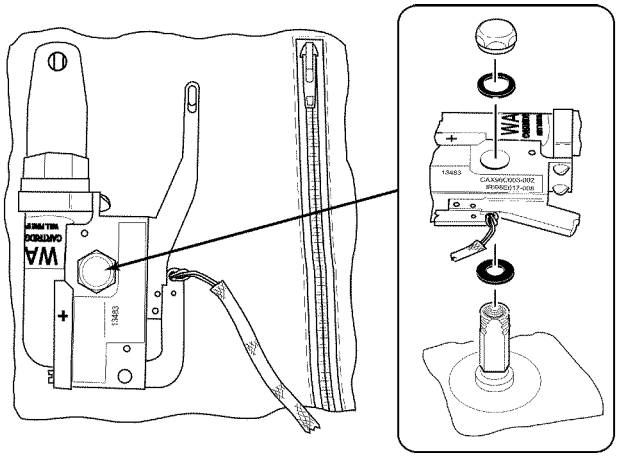

06050008

Steps 8 and 9 - Para 6-50

10. Tighten cap nut on valve stem and torque to a value of 15 to 16 in-lb.

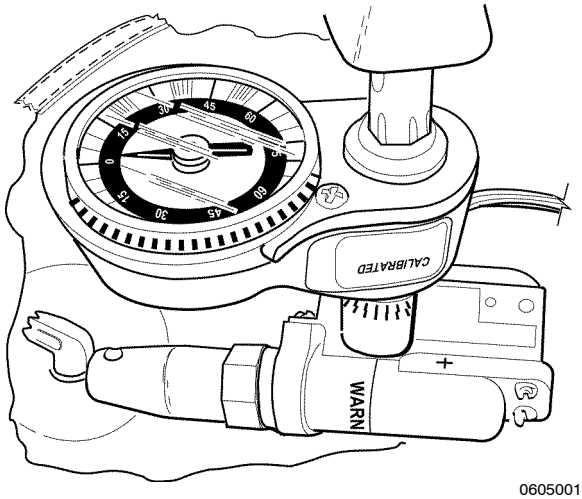

06050010

Step 10 - Para 6-50

11. Grasp the 2-inch diameter reinforcement patch on the inflation shell assembly around the inflator in one hand and the FLU-8B/P in the other hand. Holding the inflation shell assembly firmly, rotate the FLU-8B/P clockwise and counterclockwise checking for trapped material. If inflation shell assembly is binding, remove cap nut, FLU-8B/P, and both upper and lower gaskets, discard gaskets and repeat steps 7 through 11.

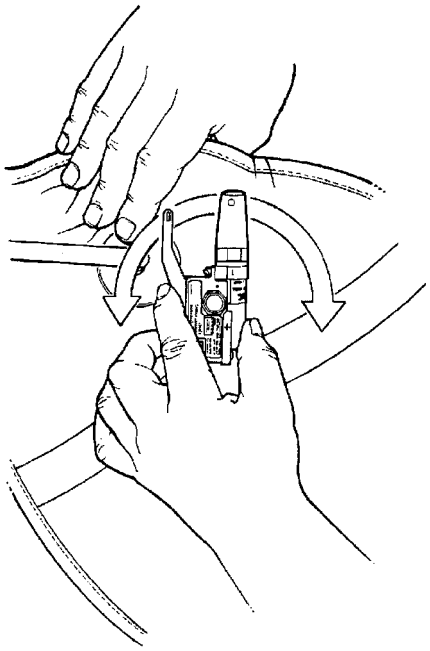

06050011

Step 11 - Para 6-50

NOTE

FLU-8B/P comes with seat seal gasket installed for CO_2 cylinder installation.

12. Ensure seat seal gasket is in place. Install both LH (102228-2) and RH (102228-1) inflation covers assemblies behind and around inflators. Insert oral inflation tubes through holes in upper portion of inflation cover assemblies and into retaining loops attached to inflation shell assembly. Ensure CO_2 cylinders have been inspected in accordance with paragraph 6-41. Install both CO_2 cylinders, MIL-C-25369C Type III, hand tight. Check LH and RH lark's head knots for security and ensure proper routing of lanyards, under (behind) FLU-8B/Ps. Close inflation covers assemblies and secure with hook and pile fastener.

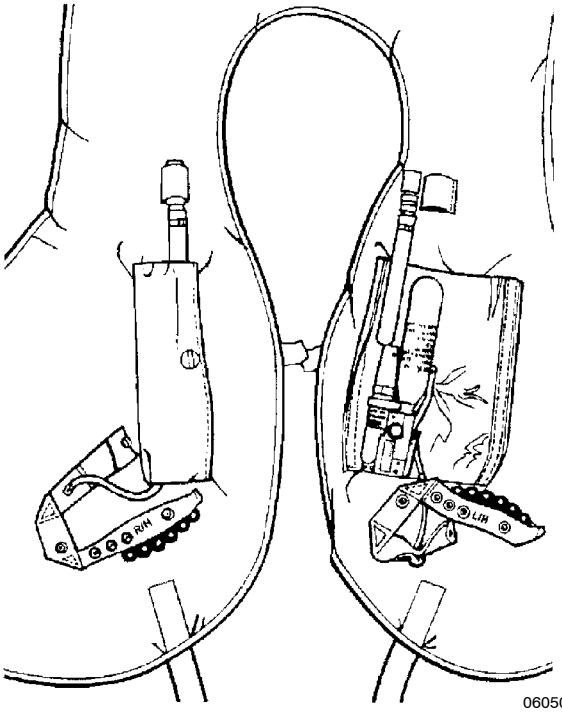

06050012

Step 12 - Para 6-50

CAUTION

Avoid placing spring clamps directly onto zipper closure of the inflation shell assembly. Spring clamps placed on zipper closures may damage bladders.

13. Place top of inflation shell assembly towards packer. Just below top zipper, make an approximately 3-inch inboard fold. Make additional accordion folds until all the shell assembly is lying flat and folded. This should be a 3 or 4 fold of 3 inches laying flat. Clamp as necessary.

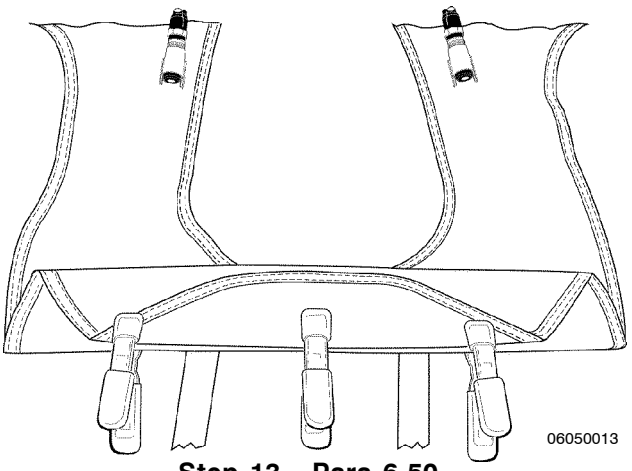

06050013

Step 13 - Para 6-50

14. Rotate assembly so that the right hand lobe is toward packer.

15. Fold the RH lobe under, in line with the outboard side of the inflation shell assembly. Clamp as necessary.

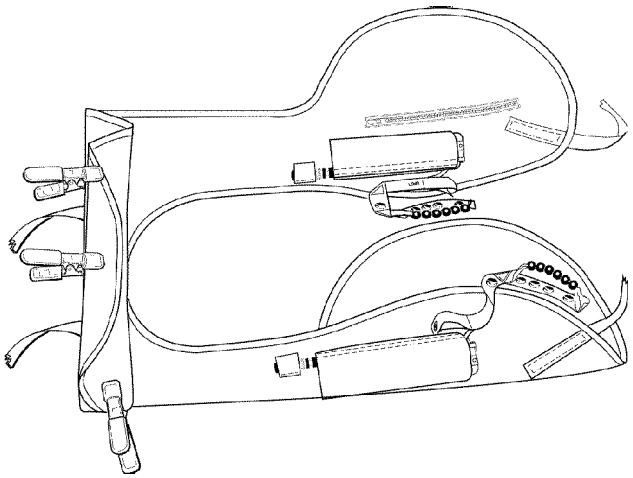

06050015

Step 15 - Para 6-50

16. Fold top portion of bladder lobe under inflation shell assembly and clamp. Ensure chest strap is accessible.

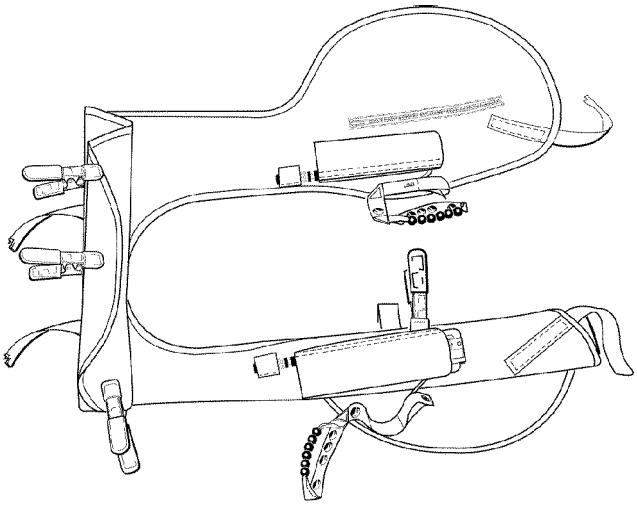

06050016

Step 16 - Para 6-50

17. Fold RH lobe back under inflation shell assembly approximately 2 1/2 inches or the width of the inflation shell assembly.

18. Fold RH lobe under inflation shell assembly even with end of inflation shell assembly. Clamp.

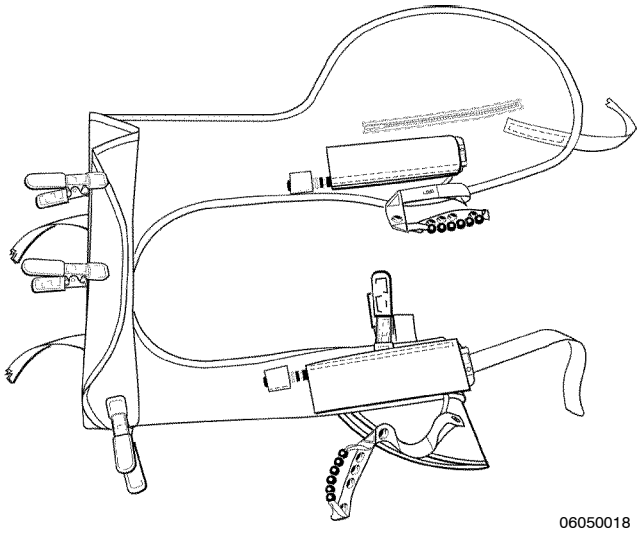

06050018

Step 18 - Para 6-50

NOTE

When placing packing aid (hook and pile) around folded inflation shell assembly ensure that the RH lower strap is retained by packing aid and facing out the bottom.

19. Fold remaining bladder assembly over inflation assembly roll excess under, even with edge of inflator assembly, and secure with hook and pile packing aids as needed.

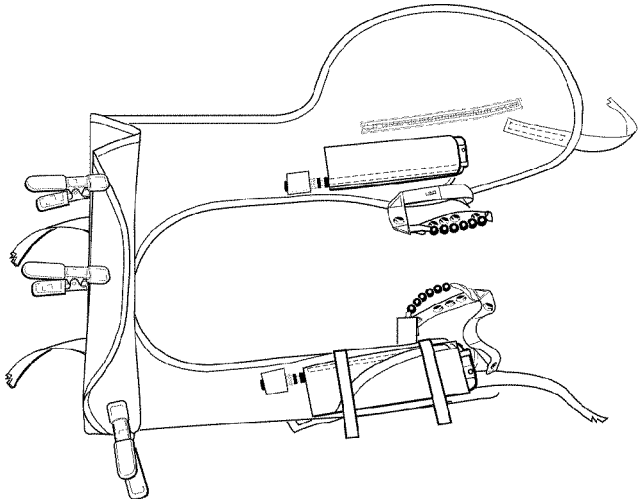

06050019

Step 19 - Para 6-50

20. Rotate assembly so that the left-hand lobe is toward packer.

21. Fold the LH lobe under, in line with the outboard side of the inflation shell assembly. Clamp as necessary.

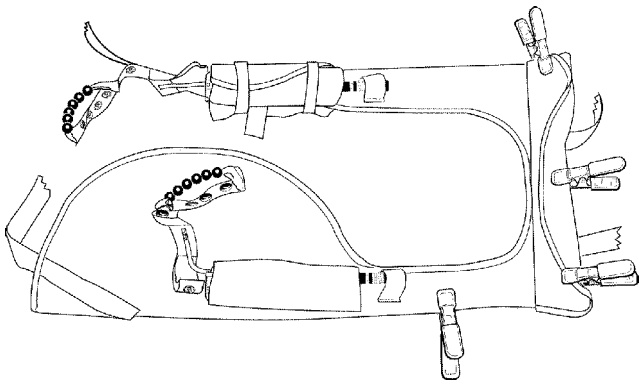

06050021

Step 21 - Para 6-50

22. Fold top portion of LH lobe under inflation shell assembly and clamp. Ensure chest strap is accessible.

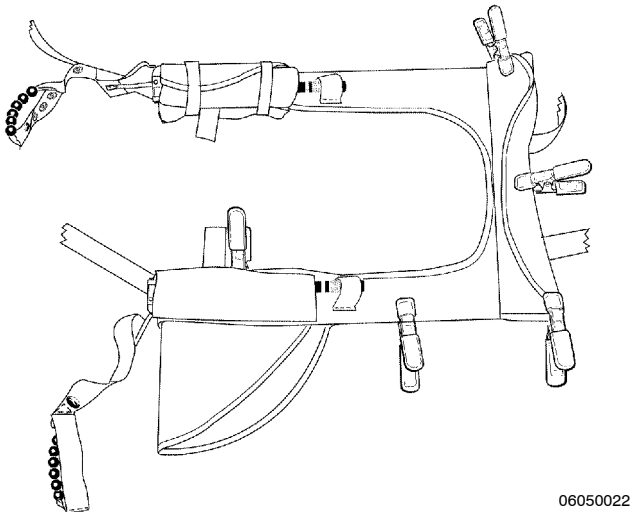

06050022

Step 22 - Para 6-50

23. Fold LH lobe back under inflation shell assembly. Approximately 2 1/2 inches or the width of the inflation shell assembly.

24. Fold LH lobe under inflation shell assembly even with inflation assembly. Clamp.

NOTE

When placing packing aid (hook and pile) around folded inflation shell assembly ensure that the LH lower strap is retained by packing aid and facing out the bottom.

25. Fold remaining bladder assembly over inflation shell assembly, roll excess under even with edge of inflator assembly, and secure with hook and pile packing aids as needed.

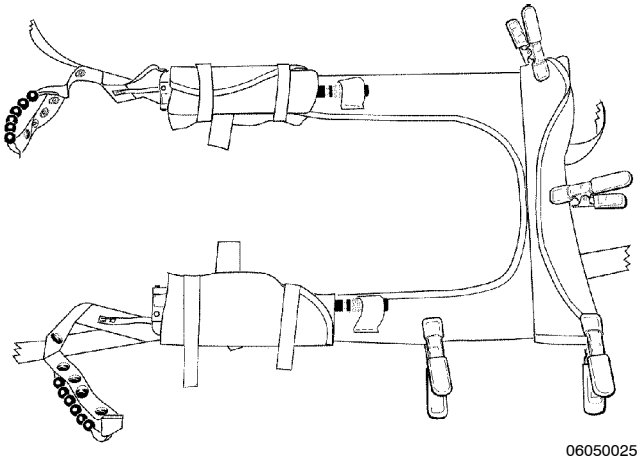

06050025

Step 25 - Para 6-50

26. Fold top inflation shell corners under to form a 45-degree angle on both sides of inner shell assembly. Clamp as required.

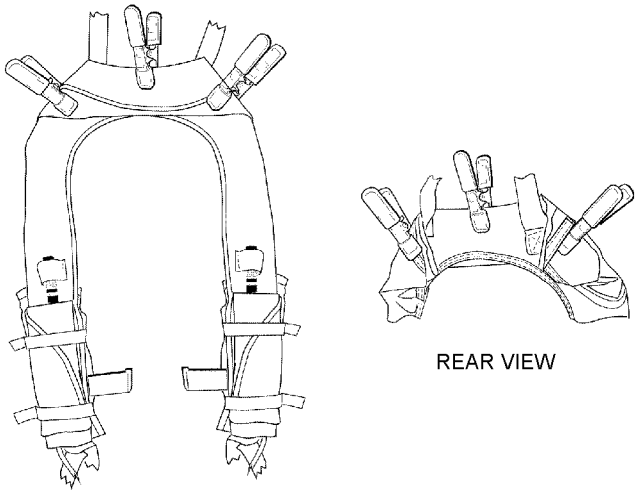

06050026

Step 26 - Para 6-50

27. Ensure that all folds are as previously directed.

28. Attach sipper slider, flat opening first, on the exterior cover assembly (110210-1), starting on the RH lower bottom grommet side. Attach the slider to bottom side of the zipper chain. The zipper slider pull-tab will be on the outside of the exterior cover.

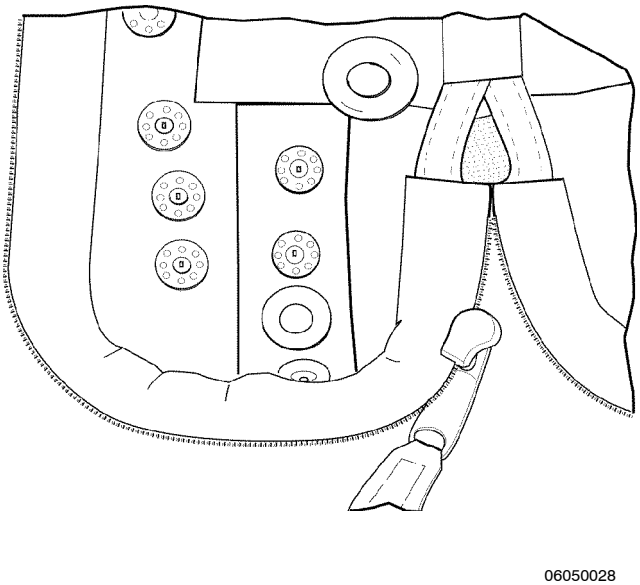

Step 28 - Para 6-50

29. Bring zipper slider all the way around to the LH side, lower bottom section of the exterior cover assembly.

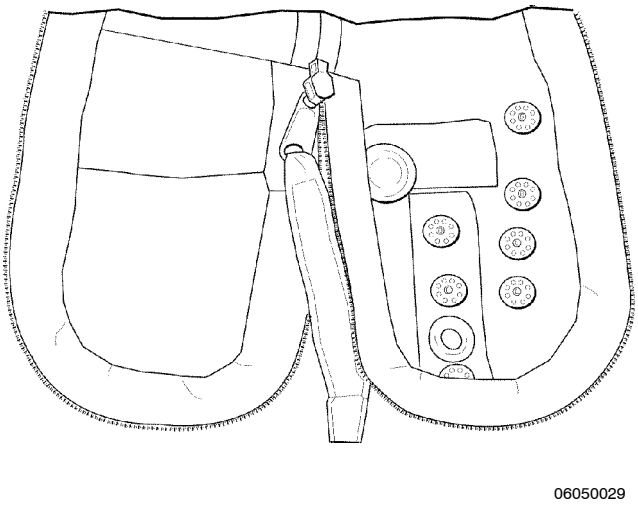

Step 29 - Para 6-50

30. Place folded inflation shell assembly into the exterior cover assembly with the LH lobe above the zipper slider.

31. Position the red inflation lanyard to pass between the zipper halves. Connect zipper half to zipper slider.

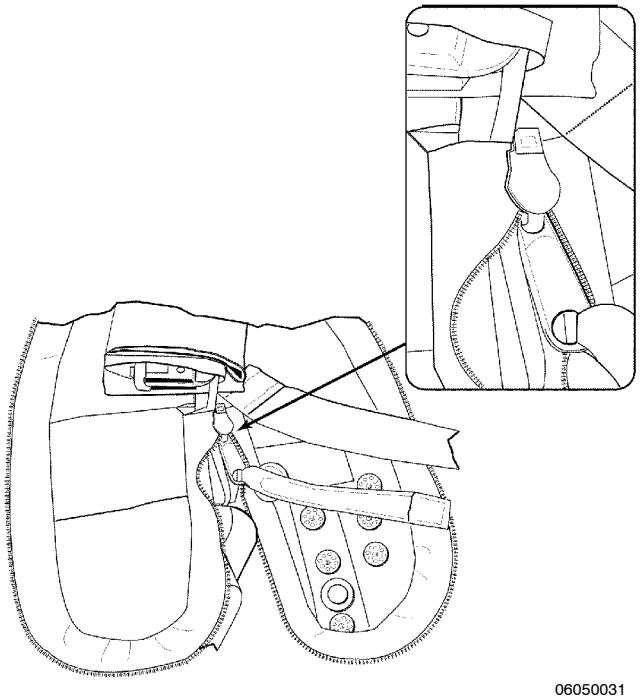

Step 31 - Para 6-50

32. Pull slider down to where top of slider is between first two snaps.

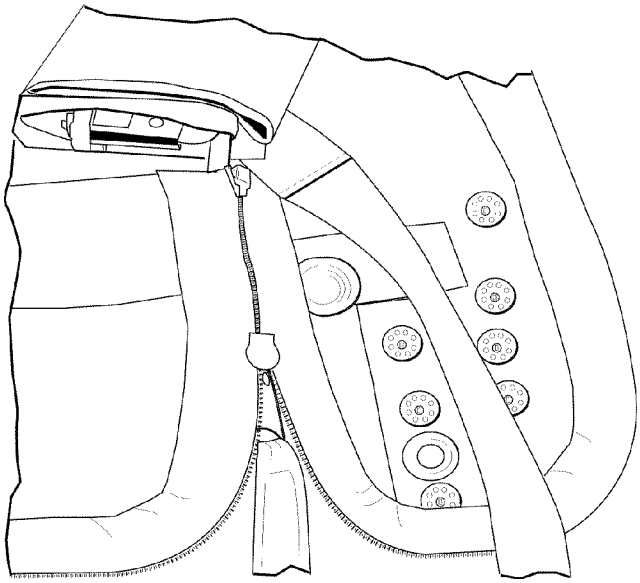

Step 32 - Para 6-50

33. Separate the ends of the zipper halves down to the zipper slider.

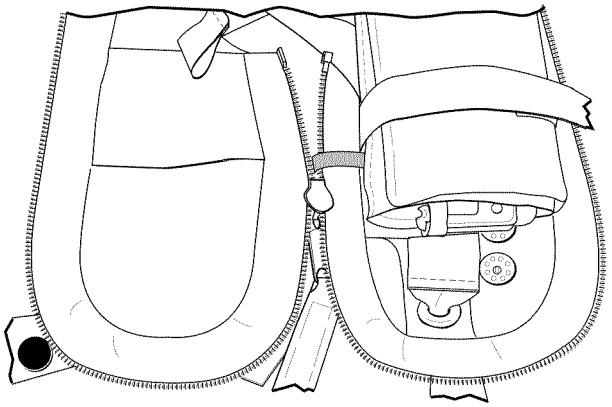

06050033

Step 33 - Para 6-50

34. Route red inflation lanyard under inflator and between zipper halves.

WARNING

Failure to separate the zipper halves and proper routing of the red inflation lanyard as directed in steps 34 and 35 may result in a life preserver malfunction.

35. Route lower attachment strap through lower grommet and pull inflation assembly to end of exterior cover.

36. Put LH chest strap through chest strap grommet. Put upper LH back strap through grommet. Put upper RH back strap through grommet. Put RH chest strap through chest strap grommet. Put RH lower strap through lower grommet.

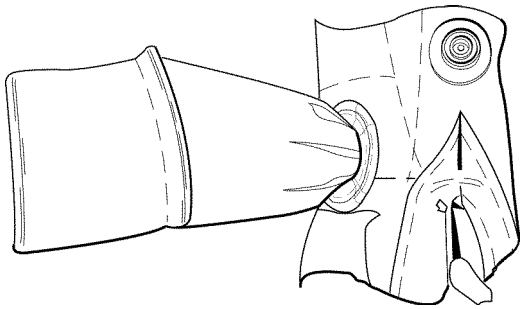

06050036

Step 36 - Para 6-50

37. Close exterior cover assembly and pull slider assembly around outboard edge of the outer shell assembly. Close exterior cover carefully. Do not force zipper slider.

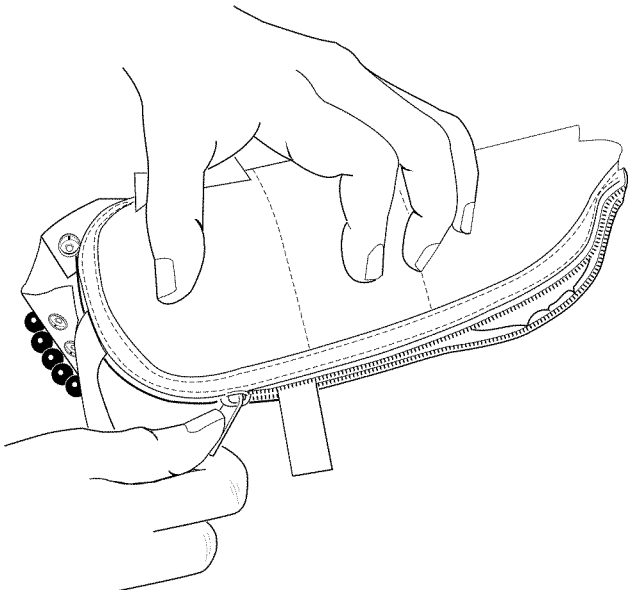

06050037

Step 37 - Para 6-50

38. Turn life preserver over to attach LH beaded handle. Attach snap above lanyard to exterior cover. Secure snap at 90-degree elbow of webbing to exterior cover and snap in place. Attach beaded handle snaps to exterior cover.

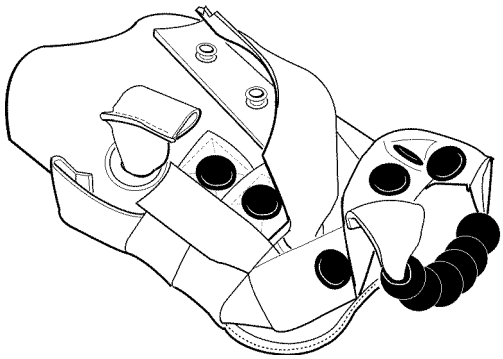

06050038

Step 38 - Para 6-50

39. Pack folded inner shell assembly into exterior cover, fold inner shell if necessary to fit into exterior cover. Continue removing packing aids as you progress.

40. Approaching the RH lobe, stuff/force the folded inner shell towards the top of the exterior cover to give more room for the zipper slider as it rounds the end of the lobe. Continue closing the exterior cover and remove packing aids.

41. Ensure red inflation lanyard is routed under inflator assembly.

42. Check for zipper separation before removal of zipper slider. If separation is found, un-zip slider past point of separation, re-clamp as needed, and re-close exterior cover.

43. Remover zipper slider and retain for tool inventory.

NOTE

Beaded handle must not trap lower attachment strap leading from grommet on back of exterior cover. Lower strap must be able to fall free from grommet.

44. Turn life preserver over to attach RH beaded handle to the exterior cover. Attach snap above lanyard to exterior cover. Attach snap above lanyard to exterior cover. Secure snap at 90-degree elbow of webbing to exterior cover and snap in place. Attach beaded handle snaps to exterior cover.

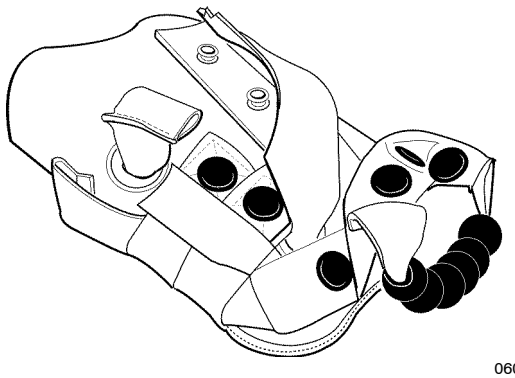

06050044

Step 44 - Para 6-50

45. Insert the two elastic straps through the 3/4-inch webbing loop and snap in place.

46. Grasp ends of the upper and lower LH strap and pull until internal stops are tight against grommets. Repeat for RH side.

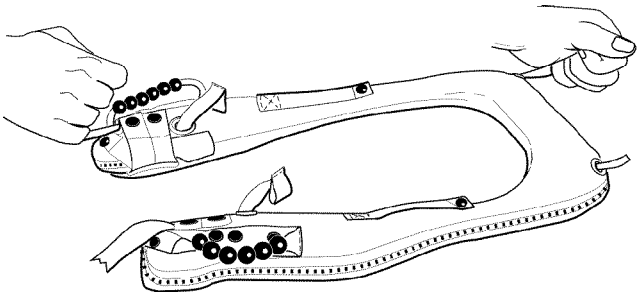

06050046

Step 46 - Para 6-50

47. Turn life preserver over with front side up.

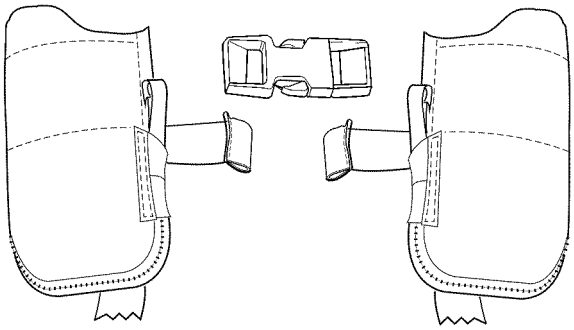

06050047

Step 47 - Para 6-50

NOTE

Use only buckle P/N 101-1100-5614. DO NOT substitute.

48. Weave LH buckle strap through LH (male) buckle half as shown. Route webbing inboard to outboard. Weave the RH buckle strap through RH (female) buckle half in the same manner as the LH side. Connect buckle halves together and pull tight. Tack LH and RH buckle webbing through the center of both pieces of the webbing, using 3 cord thread waxed, single. Use a surgeon's knot followed by a square knot.

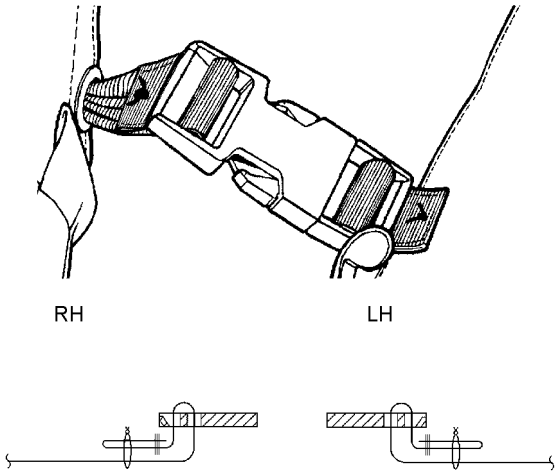

06050048

Step 48 - Para 6-50

49. Safety tie beaded handles top snap webbing, below first snap, to exterior cover, route under webbing on exterior cover, with one turn of size E thread waxed, single. Tie with a surgeon's knot followed by a square knot.

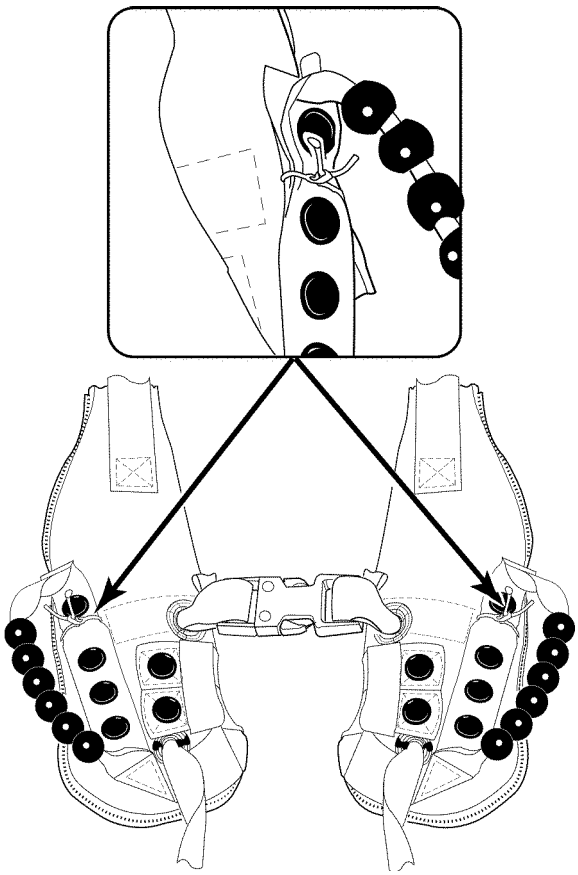

06050049

Step 49 - Para 6-50

WARNING

Do not tie down beaded handles.

50. Inspect the zipper edge to ensure no coil separation. If separation is found, the exterior cover must be reassembled. Inspect male and female buckle halves for proper installation.

51. Account for all tools and packing aids.

52. Make necessary entries on appropriate forms in accordance with OPNAVINST 4790.2 Series to include:

a. Date of installation of each FLU-8B/P.

b. Date of manufacture of each FLU-8B/P.

c. Lot number of each FLU-8B/P.

d. Serial number of each FLU-8B/P.

e. Date of installation of batteries.

f. Date of manufacture of batteries (paragraph 6-33).

6-51. CLEANING AND SALTWATER DECONTAMINATION.

6-52. CLEANING. If required to clean any portion of the life preserver, remove any detachable items and proceed as follows:

Materials Required

Quantity	Description	Reference Number
As Required	Detergent, General Purpose	MIL-D-16791 NIIN 00-282-9699
As Required	Lint-free Cloth, Type II	MIL-C-85043 NIIN 00-044-9281

CAUTION

Solvents shall not be used to clean life preservers.

1. Prepare solution of detergent (MIL-D-16791) consisting of 1/4 to 1/2 ounce of detergent per gallon of water.

2. Apply cleaning solution to soiled area with a spray or sponge.

3. Allow solution to remain on surface for several minutes, then agitate with a soft brush or rag.

4. Rinse surface thoroughly with water, wipe with a cloth or sponge. Repeat this application until surface is free from all solution.

5. Dry life preserver with a lint-free cloth (MIL-C-85043) and allow to dry completely.

6-53. SALTWATER DECONTAMINATION. After every immersion in salt water, the life preserver shall be rinsed in clean fresh water as follows:

1. Rinse all components in fresh water.

2. Inflate bladder with air and allow to dry.

3. Clean all components in accordance with paragraph 6-52.

4. Perform 360-Day Special Inspection in accordance with paragraph 6-27.

Section 6-4. Illustrated Parts Breakdown (IPB)

6-54. GENERAL.

6-55. This section lists and illustrates the assemblies and detail parts of the LPU-36/P Low Profile Floatation Collar.

6-56. The Illustrated Parts Breakdown should be used during maintenance when requisitioning and identifying parts.

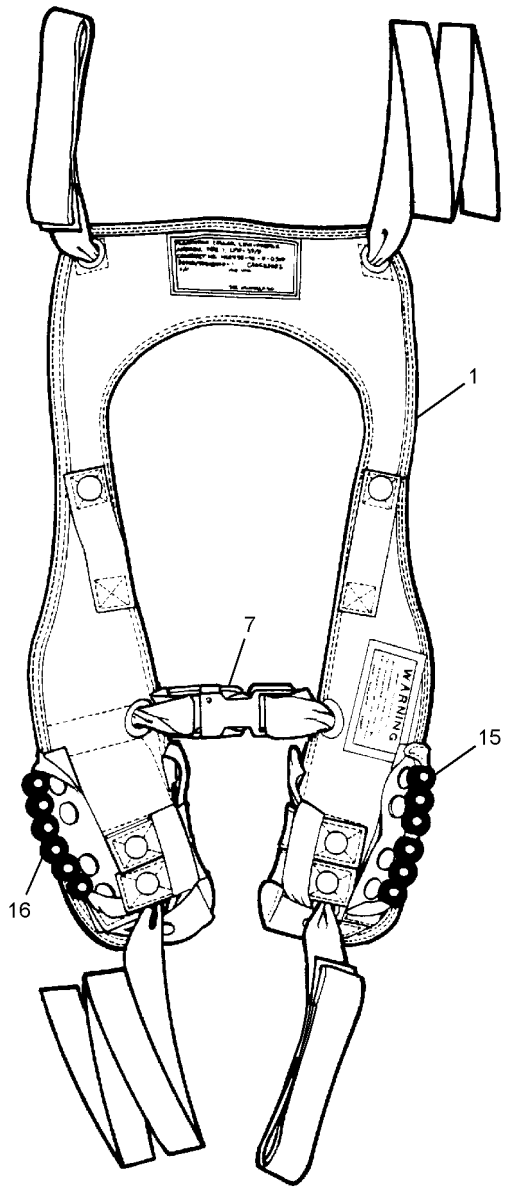

BACK VIEW

006009-1

Figure 6-9. LPU-36/P, Low Profile Floatation Collar, Life Preserver (Sheet 1 of 2)

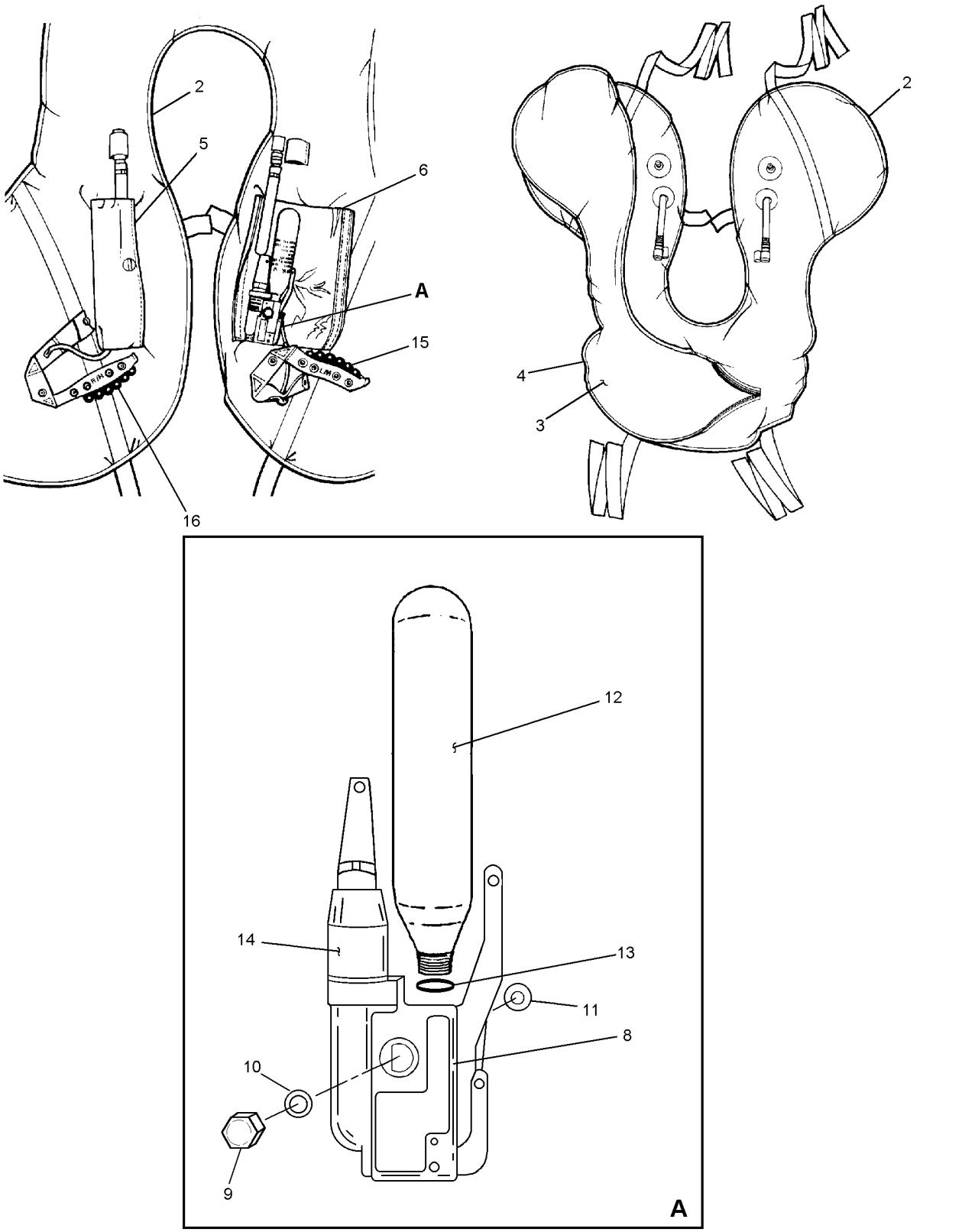

Figure 6-9. LPU-36/P, Low Profile Floatation Collar, Life Preserver (Sheet 2 of 2)

Figure and Index Number	Part Number	Description 1 2 3 4 5 6 7	Units Per Assembly	Usable On Code
6-9	830AS260-1	LPU-36/P, Low Profile Floatation Collar, ... Life Preserver (CAGE 30003)	REF	
	110500-1	LPU-36/P, Low Profile Floatation Collar, ... Life Preserver (CAGE 05DK2)	REF	
-1	110210-1	. EXTERIOR COVER ASSEMBLY . . . . . (CAGE 05DK2)	1	
-2	110221-1	. INFLATION SHELL ASSEMBLY . . . . . (CAGE 05DK2)	1	
-3	110230-1	. INNER (BOTTOM) INFLATABLE . . . . . ASSEMBLY (CAGE 05DK2)	1	
-4	110240-1	. OUTER (TOP) INFLATABLE ASSEMBLY . . . . . (CAGE 05DK2)	1	
-5	102228-1	. INFLATOR COVER RH (CAGE 05DK2)	1	
-6	102228-2	. INFLATOR COVER LH (CAGE 05DK2)	1	
-7	101-1100-5614	. PLASTIC BUCKLE, Male/Female (Note 3) . . . . . (CAGE 02768)	1	
-8	1812-173-01	. INFLATION DEVICE, Automatic, FLU-8B/P . . . (CAGE 62323) (Note 5)	2	
		(ATTACHING PARTS)		
-9	52A6600	. VALVE CAP, Inflator (CAGE 80049)	1	
-10	105AS100-3	. GASKET, Top (CAGE 30003) (Note 1)	1	
-11	105AS100-4	. GASKET, Bottom (CAGE 30003) (Note 1)	1	
		---*---		
-12	MIL-C-25369C	. CO_2 CYLINDER, Type II, 35 Gram (Note 5) . . .	2	
-13	NIIN 01-046-3300	. SEAT SEAL, O-ring, Multi	2	
-14	849AS103	. BATTERY, 6 Volt (CAGE 30003) (Note 5)	4	
-14A	1122-095	. SLEEVE, Battery Insulating (Note 4) . . . . . (Not Illustrated)	1	
-15	110251-2	. BEADED HANDLE RH (CAGE 05DK2)	1	
-16	110251-1	. BEADED HANDLE LH (CAGE 05DK2)	1	

Notes:

1. Top and bottom gaskets are obtained from Valve Stem Kit, P/N 105AS100-6, NIIN 00-113-8290, which contains one top and one bottom gasket.
2. Packing Aids for LPU-36/P:
   - Zipper Slide Assembly, P/N 101201 (CAGE 05DK2)
   - Bladder Assembly Keeper (4), P/N 101202 (CAGE 05DK2).
   - 1″ Spring Clamp, P/N 3201-HT
3. No substitutes authorized.
4. The battery insulating sleeve is not a stocked item. After installation directed by Aircrew Systems Bulletin 976, it becomes part of the FLU-8B/P Unit. Replacement sleeves are issued by Indian Head Division, NSWC.
5. The LPU-36/P will be shipped without the FLU-8B/P, batteries (4 each per assembly) and the CO_2 bottles (2 each per assembly). These items shall be procured separately and installed by the I-level prior to issue.

NUMERICAL INDEX

Part Number	Figure and Index Number	SM&R Code
MIL-C-25369C	6-9-12	PAGZZ
NIIN 01-046-3300	6-9-13	PAGZZ
101-1100-5614	6-9-7	PAGZZ
102228-1	6-9-5	PAGZZ
102228-2	6-9-6	PAGZZ
105AS100-3	6-9-10	PAGZZ
105AS100-4	6-9-11	PAGZZ
110210-1	6-9-1	PAGZZ
110221-1	6-9-2	PAGGG
110230-1	6-9-3	PAGZZ
110240-1	6-9-4	PAGZZ
110251-2	6-9-15	PAGZZ
110251-1	6-9-16	PAGZZ
110500-1	6-9	PAOGG
1122-095	6-9-14A	
1812-173-01	6-9-8	PAGGA
52A6600	6-9-9	PAGZZ
830AS260-1	6-9	PAOGG
849AS103	6-9-14	PCGZZ

CHAPTER 7

TRI-SAR HARNESS ASSEMBLY FLOATATION VEST, P/N 487VB, FOR SEARCH AND RESCUE OPERATIONS

7-1. GENERAL.

7-2. The TRI-SAR Harness Assembly Floatation Vest, P/N 487VB, is a removable component of the TRI-SAR Harness Assembly, P/N 487. Information regarding configuration, application and function of the TRI-SAR Harness Assembly For Search and Rescue Operations is contained in NAVAIR 13-1-6.5, Rescue and Survival Equipment Manual.

7-3. MAINTENANCE.

7-4. Maintenance of the Floatation Vest shall be accomplished at the Intermediate Level of maintenance.

7-5. INSPECTION. The TRI-SAR Harness Assembly Floatation Vest, P/N 487VB, is subject to Place-In-Service, Preflight, and 90-Day Special Inspections.

7-6. A Place-In-Service Inspection shall be performed on the Floatation Vest prior to placing in service and a Special Inspection shall be performed once every 90 days. A Functional Test shall be performed prior to placing in service, and every fourth inspection cycle thereafter, and whenever an inflation assembly is replaced. A Leakage Test shall be performed during every inspection cycle. Upon completion of inspection, make necessary entries on appropriate forms in accordance with OPNAVINST 4790.2 series.

7-7. Place-In-Service Inspection. A Place-In-Service Inspection shall be performed prior to placing in service. The Place-In-Service Inspection consists of the following:

NOTE

Failure of the Floatation Vest during any portion of the Place-In-Service Inspection renders the vest non-RFI and must be reported in accordance with OPNAVINST 4790.2 series.

1. Inspect inflation assembly for corrosion, damaged threads, and ease of operation. Operate lever several times to ensure it moves freely.

2. Inspect pull toggle and lanyard for damage.

NOTE

Bladder is entirely encased and cannot be inspected or removed. Inspection is limited to a visual inspection and an inflation test.

A 1-inch bar tacking is located at the bottom of each lobe. This is to prevent excessive loading of internal bladder during over-inflation, which in time could cause bladder leakage. Bar tacking may become loose or have broken stitches. Inspect bar tacking in accordance with paragraph 7-9.

3. Inspect Floatation Vest casing for cuts, tears, deterioration, abrasion, stains, and general cleanliness.

4. Perform a Functional Test in accordance with paragraph 7-10.

7-8. Preflight Inspection. The Preflight Inspection requirements are identified in NAVAIR 13-1-6.5.

7-9. 90-Day Special Inspection. A Functional Test shall be performed every fourth inspection. The 90-Day Special Inspection shall consist of the following:

NOTE

The floatation bladder is entirely encased and cannot be inspected or removed. Any damage other than minor damage to hook and pile tape and replacement of inflation assembly or check valve assembly shall render the floatation assembly non-RFI and it shall be replaced.

1. Inspect inflation assembly for corrosion, damaged threads, and ease of operation. Operate lever several times to ensure it moves freely.

2. Inspect beaded handle and lanyard for damage.

3. Inspect oral inflation tube for cracks, security, ease of operation, and corrosion.

4. Inspect Floatation Vest casing for cuts, tears, deterioration, abrasion, stains, and general cleanliness.

4A. Inspect 1-inch bar tacking for loose or broken stitches on casing lower lobes. Using a standard ruler, measure bar tacking. Remaining intact bar tacking shall not be less than 3/8 inches. If tacking measures under 3/8 inch, contact Life Savings Systems Corp (813) 645-2748, 220 Elsberry Road, Apollo Beach, FL 33572-2289 for turn-in and repair instructions.

5. Inspect survival item pockets for loose or damaged hook and pile tape. Repair hook and pile tape by over-stitching along the original seam line with Size E, Nylon Thread V-T-295, six to eight stitches per inch.

6. Perform Functional or Leakage Test as required.

7-10. Functional Test. A Functional Test shall be performed at the Place-In-Service Inspection, every fourth inspection cycle, and each time the inflation assembly or check valve assembly is removed or replaced. To perform the Functional Test, proceed as follows:

Materials Required

Quantity	Description	Reference Number
1	Cylinder, CO_2, Type II	MIL-C-25369C NIIN 00-543-6693

1. Install CO_2 cylinder and actuate inflation assembly by pulling on the pull toggle.

2. The Floatation Vest shall fully inflate to design shape, without evidence of restriction, in less than 30 seconds.

3. If preserver does not properly inflate, inspect inflation assembly and repair as necessary.

NOTE

For Place-In-Service Inspection, if vest does not properly inflate, deflate vest and report discrepancy in accordance with OPNAVINST 4790.2 series.

3. Deflate vest in accordance with paragraph 7-12.

4. Perform Leakage Test in accordance with paragraph 7-11.

7-11. Leakage Test. The Floatation Vest is subject to Leakage Test after every Functional Test and 90-Day Special Inspection. To perform the Leakage Test, proceed as follows:

Materials Required

Quantity	Description	Reference Number
As Required	Inflation Assembly (Note 1)	487-1-3
As Required	Valve, Pneumatic Inflator (Check Valve) (Note 2)	8457500047
As Required	Kit, Gasket	105AS100-5 NIIN-00-498-6964
As Required	Leak Detection Compound	MIL-L-25567 NIIN 00-186-2963

Notes: 1. Inflation assembly must be open purchased from the following source:
Life Saving Systems Corp,
220 Elsberry Road,
Apollo Beach, FL 33572-2289
Phone (813) 645-2748.

2. Pneumatic inflator check valve must be open purchased from the following source:
Schrader-Bridgeport Intl.
205 Frazier Rd,
P.O. Box 668, Altivista, VA 24517
Phone (804) 369-8826.

CAUTION

Ensure test area is free of foreign objects.

1. Ensure all carbon dioxide has been removed from life preservers that have been functionally tested.

CAUTION

Do not over-inflate bladder. Over-inflation can cause damage to bladder along with excessive stress and ripping of bar tacking on lower casing lobes.

NOTE

You may use either the test fixture identified in Chapter 3 or use standard shop procedures to inflate and deflate life preserver.

2. Depress mouthpiece button to open oral inflation valve and inflate vest to 2.0 psig. Release mouthpiece button and close oral inflation valve.

3. After a minimum of 15 minutes, re-check pressure and, if necessary, re-adjust test pressure to 2.0 psig. Ensure oral inflation valve is closed and record time.

4. Record temperature and barometric pressure as required.

5. After a minimum of 2 hours, record test pressure. Test pressure must not drop below 1.8 psig after 2 hours.

6. If pressure of vest is below 1.8 psig, re-inflate to 2.0 psig and coat inflation assembly with a leak detection compound or a soap solution. If leakage is detected coming from the inflation assembly, inspect check valve and replace as necessary in accordance with paragraph 7-13. If leakage is detected at any other location on Floatation Vest, replace Floatation Vest and perform Place-In-Service Inspection.

7. Deflate the Floatation Vest in accordance with paragraph 7-12.

8. Install a Type II CO_2 cylinder in accordance with paragraph 7-14.

9. Snap beaded handle to Floatation Vest.

10. Safety wire inflation assembly in accordance with paragraph 7-15.

11. Secure velcro tape on both sides of Floatation Vest.

12. Make necessary entries on appropriate forms in accordance with OPNAVINST 4790.2 series.

7-12. DEFLATION. To deflate the Floatation Vest, proceed as follows:

Support Equipment Required

Quantity	Description	Reference Number
1	Pump, Rotary Vacuum (or equivalent)	NIIN 00-052-5015 (90567)
As Required	Hose, 3/8- or 1/2-inch Inside Diameter, Rubber	—

1. Attach one end of rubber hose to vacuum pump.

2. Deflate through oral inflation valve. Hold in open position, and hold vacuum pump hose in hand against end of oral inflation valve and press valve button. When compartment is collapsed, release button on oral inflation valve. Screw lock closed.

7-13. REPLACEMENT OF CHECK VALVE ASSEMBLY. To replace a defective check valve assembly, proceed as follows:

Materials Required

Quantity	Description	Reference Number
1	Valve, Pneumatic Inflator (Check Valve Assembly) (Note 1)	Schrader-Bridgeport P/N 8457500047

Notes: 1. Schrader-Bridgeport P/N 8457500047 must be open purchased from:
Schrader-Bridgeport Intl
205 Frazier Rd
P.O. Box 668
Altivista, VA 24517
Phone (804) 369-8875

Support Equipment Required

Quantity	Description	Reference Number
1	Tool, Valve Core	8769A or equivalent (CAGE 27783) NIIN 01-354-5423
1	Wrench, Torque	—

1. If not available, fabricate a valve core tool as shown in Chapter 3.

2. Remove inflator cap nut.

3. Insert valve core tool and unscrew check valve from valve stem.

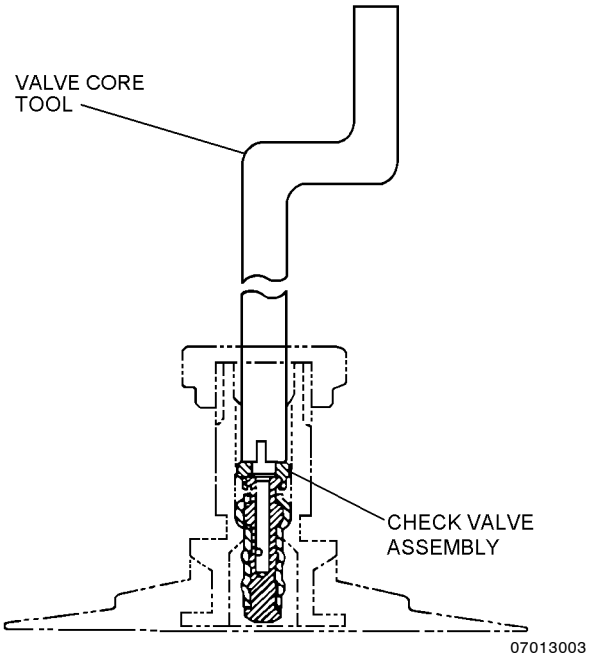

Step 3 - Para 7-13

4. Insert new check valve in valve stem and tighten with valve core tool hand tight.

5. Replace cap nut and torque to a value of 8 ± 1 in-lb.

6. Perform Functional and Leakage Tests in accordance with paragraphs 7-10 and 7-11.

7-14. INSTALLATION OF CO_2 CYLINDER. To install cylinder, proceed as follows:

Materials Required

Quantity	Description	Reference Number
1	Kit, Gasket	105AS100-5 (CAGE 30003) NIIN 00-498-6964
1	Cylinder, CO_2 Type II	MIL-C-25369C NIIN 00-543-6693

Support Equipment Required

Quantity	Description	Reference Number
1	Scale (Gram)	A-A-52021-1 NIIN 00-514-4117 or equivalent
1	Die, Cylinder Thread Chaser	1842-008-01 (CAGE 03688) NIIN 00-069-4040

NOTE

Weight of charged cylinder will vary according to manufacturer.

1. Weigh a charged cylinder and compare the minimum stamped weight with the scale weight. Discard and replace cylinder if scale weight is 2 grams less than minimum stamped weight.

2. Ensure that inflator lever is in a closed position.

CAUTION

Steel threads on CO_2 cylinder can cause damage to aluminum threads on inflator if cylinder is not carefully threaded. If binding occurs during installation of cylinder, use thread chaser die on cylinder thread to cut free excessive plating. Reinstall cylinder. If binding still occurs, replace cylinder.

3. To assure a firm cylinder seat, conduct a cylinder thread count. Threaded portion of cylinder neck shall contain a minimum of seven full threads to assure a firm cylinder seat within valve body. Any cylinder found with less than seven full threads shall be discarded.

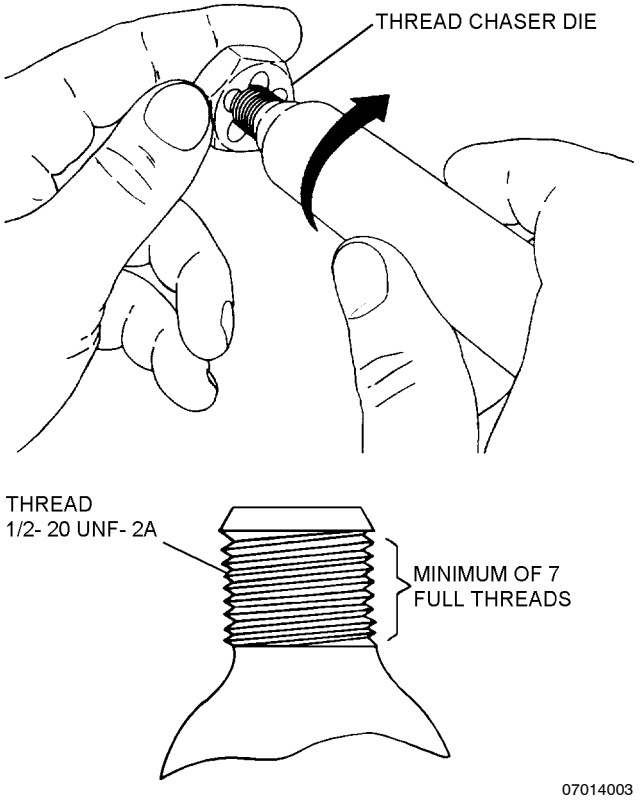

Step 3 - Para 7-14

4. After performing Functional Test, insert a new seat seal gasket from kit. At intermediate inspection intervals, inspect condition of gasket and replace if necessary.

5. Install CO_2 cylinder into inflator body as far as hand twisting will permit.

NOTE

When replacing CO_2 cylinder, ensure that CO_2 cylinder passes through the holding loop.

6. Safety-wire inflator as required in accordance with paragraph 7-15.

7. Secure inflation valve protective cover.

7-15. SAFETY-WIRING. To safety-wire the inflation assembly, proceed as follows:

Materials Required

Quantity	Description	Reference Number
As Required	Copper Wire, Uncoated, Type S, 0.0159-inch Diameter	QQ-W-343 NIIN 00-236-9501

1. Pass a single strand of uncoated, 0.0159-inch Type S copper wire through hole in inflation assembly body and through hole in actuation lever.

2. Twist the wire a minimum of four times and trim the excess.

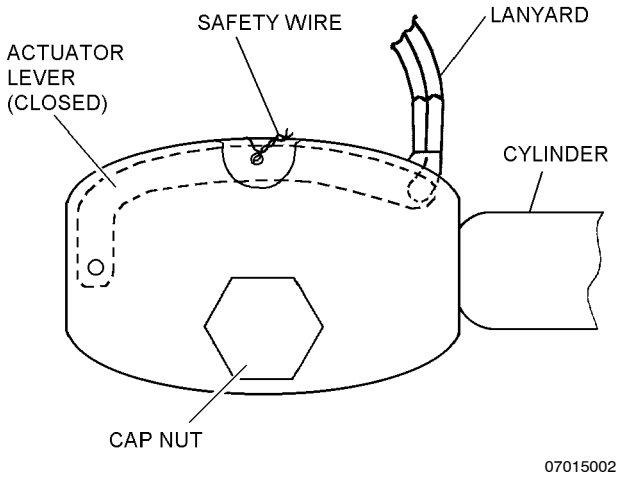

Step 2 - Para 7-15

THIS PAGE INTENTIONALLY LEFT BLANK.

CHAPTER 8

LIFE PRESERVER, LOW-PROFILE FLOATATION COLLAR, LPU-37/P

Section 8-1. Description

8-1. GENERAL.

8-2. The LPU-37/P Life Preserver, Low Profile Floatation Collar (LPFC), is equipped with two manually operated inflation devices. The LPU-37/P is designed as a constant wear item for use with compatible flight clothing and other crew equipment. It weighs 3 1/4 pounds and provides a minimum of 65 pounds of buoyancy. There are no survival items attached to the life preserver and it does not interfere with removal of a non-integrated parachute harness. It has a zipper (slide fastener) the same color as the exterior cover to aid in distinguishing it from the LPU-33/P. The LPU-33/P has a black zipper and is equipped with automatic inflation devices.

NOTE

The CFA for LPFC (LPU-37/P) is Naval Air Warfare Center Weapons Division, China Lake, CA 93555.

8-3. CONFIGURATION.

8-4. The LPU-37/P consists of an exterior cover assembly (casing assembly), inflation shell assembly, and a flotation assembly. The flotation assembly consists of two independent inflatable assemblies (bladders) each of which is equipped with a manual inflation device and an oral inflation valve. The bladders are packed in a black cloth inflation shell assembly. Four straps on the inflation shell assembly pass through grommets on the exterior cover assembly to attach the LPU-37/P to the survival vest. A beaded handle which connects by lanyard to an inflation device is mounted on each side of the exterior cover to initiate inflation of the life preserver. Two additional straps adjust a plastic buckle which snaps across the wearer's chest to help keep the LPU-37/P in position when worn.

8-5. INFLATION SHELL ASSEMBLY. The black cloth inflation shell assembly contains the two inflatable bladders. The design of the shell assembly provides the shape for the flotation collar. There are openings in the shell assembly through which the inflation valve stem and oral inflation tube of each bladder extend. A manual inflation device is secured to each valve stem by a cap nut which also serves as a cap for the valve stem. When installed each inflation device and its CO_2 cylinder are wrapped in a protective cover. The oral inflation valve tubes, which are provided as backup to CO_2 cylinder inflation, are retained by inserting the top of each tube in retainer loops attached to the inflation shell assembly.

8-6. APPLICATION.

8-7. The LPU-37/P LPFC is designated for use by aircrew personnel operating aircraft which are not equipped with ejection seat systems. It is designed for constant wear when wearing compatible flight clothing. The LPU-37/P is authorized for use with the A/P22P-11 emergency egress crew backpack assembly and A/P22P-20 crew backpack assembly in E-2C aircraft only.

8-8. FUNCTION.

8-9. The LPU-37/P is inflated by pulling the beaded handles in a natural downward motion. Each beaded handle is connected by a lanyard to the actuating lever of an inflation device. Pulling the handles initiates zipper separation on the exterior cover and causes the CO_2 cylinder to be punctured, inflating the bladders. The zipper on the exterior cover continues to separate as the bladders inflate to provide head-out-of-water buoyancy.

8-10. In an emergency situation, the oral inflation tubes may be used to top off the inflated bladders, maintain inflation in a leaky bladder, or inflate a bladder if an inflation device malfunctions. The oral inflation tube may also be used to inflate the bladders during an inspection test or to evacuate air to perform packing.

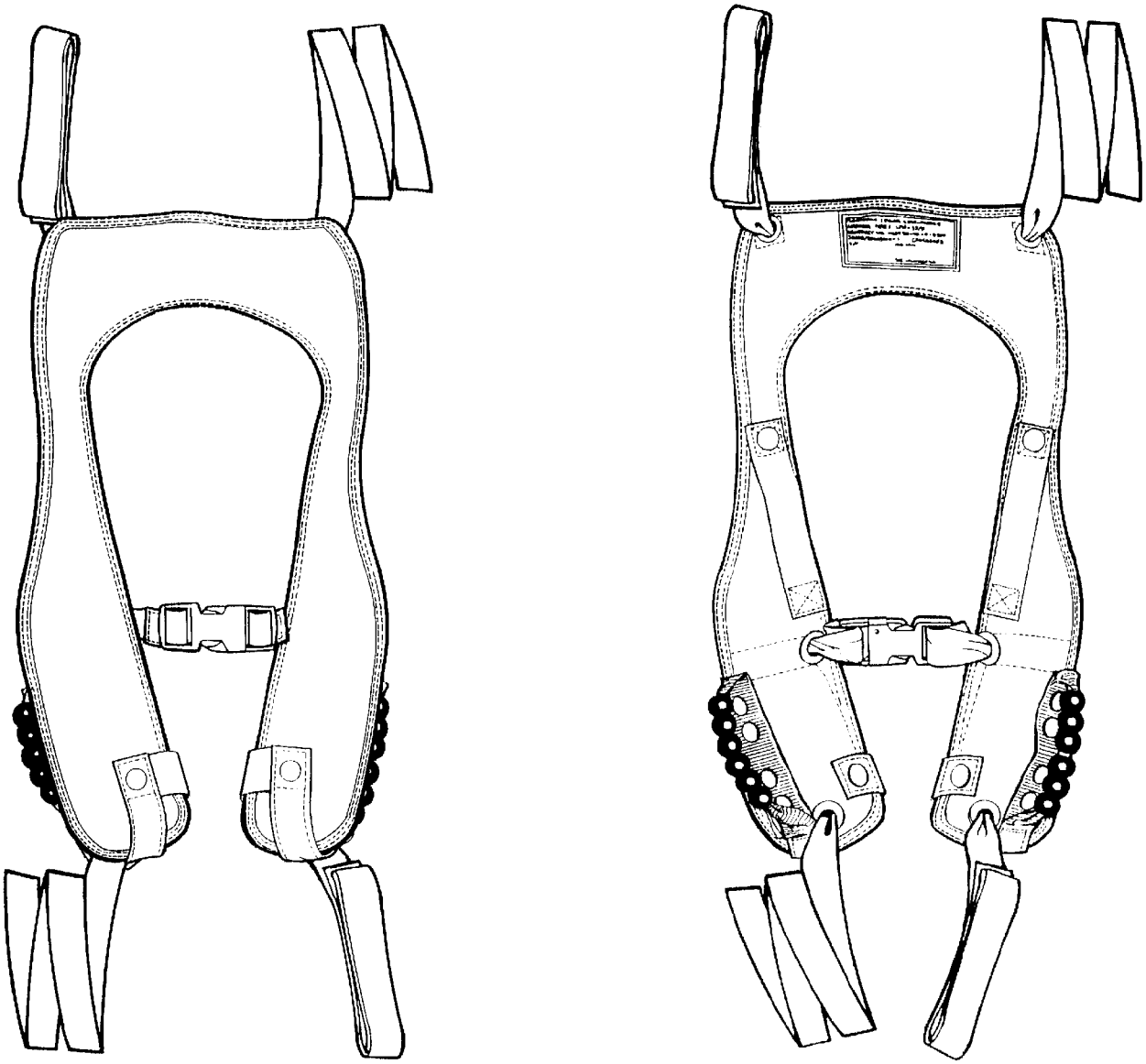

008001

Figure 8-1. LPU-37/P, Life Preserver, Low Profile Floatation Collar (LPFC)

NOTE

The exterior cover must be manually opened prior to attempting to inflate the bladders using the oral inflation tubes.

Section 8-2. Modifications

8-11. GENERAL.

8-12. There are no modifications authorized on the LPU-37/P.

Table 8-1. LPU-37/P Directives

Description of Modification	Application	Modification Code
None		

Section 8-3. Maintenance

8-13. GENERAL.

8-14. This section contains information on LPU-37/P inspection, testing, cleaning, servicing, packing, and repair/replacement. Refer to table 8-2 for listing of repair/replacement actions.

8-15. INSPECTION.

8-16. The inspection requirements for the LPU-37/P Life Preserver shall include Preflight, 360-Day Special, and Place-In-Service inspections.

8-17. The Preflight Inspection shall be performed prior to each flight by the aircrewmember to whom the life preserver is assigned.

8-18. The 360-Day Special Inspection shall be performed once every 360 days after the LPU-37/P has been placed in service. The 360-Day Special Inspection shall be performed by qualified personnel at the Intermediate level of maintenance. The Functional Test shall be performed during every 360-Day Special Inspection.

8-19. The Place-In-Service Inspection shall be performed on all life preservers prior to placing in service. The Place-In-Service Inspection shall be performed by qualified personnel at the intermediate level of maintenance. If inspection indicates required repair is beyond the capability of maintenance, complete appropriate forms in accordance with OPNAVINST 4790.2 Series and forward entire assembly to supply.

8-20. QUALITY ASSURANCE. The more critical procedures in this chapter are underlined to designate steps which require a Quality Assurance Inspection to assure performance of specific requirements. After the underlined step is performed by the Aircrew Survival Equipmentman, the procedure shall be verified before the next step is performed. This verification shall be performed by a Collateral Duty Inspector or Quality Assurance Representative (CDI, CDQAR, or QAR). Under no circumstances shall an Aircrew Survival Equipmentman perform his own Quality Assurance Inspection.

8-21. PREFLIGHT INSPECTION. The Preflight Inspection shall be performed at the organizational level prior to each flight by the aircrewmember to whom the life preserver is assigned as follows:

WARNING

Ensure that the beaded inflation handles are readily accessible. Beaded inflation handles shall be secured with six snap fasteners.

CAUTION

Do not open any sealed or safety-tied portion of the life preserver for Preflight Inspection.

1. Inspect exterior cover for cuts, tears, deterioration, abrasions, stains, cleanliness, security of stitching, and other signs of damage.

2. Inspect snaps for secure attachment, corrosion, and ease of operation.

3. Inspect zipper closing for security throughout its length.

4. Inspect plastic buckles and buckle straps for proper operation and security. Buckles may be replaced without removing the life preserver from service.

5. Inspect identification and warning labels for secure attachment.

6. If any discrepancy is noted, the life preserver shall be returned to the Aviator's Equipment Branch for determination of maintenance action and disposition.

8-22. 360-DAY SPECIAL INSPECTION. The 360-Day Special Inspection consists of the following:

1. Preflight Inspection (LPU-37/P) (paragraph 8-21).

2. Inflation Shell Assembly Visual Inspection (paragraph 8-24).

3. Exterior Cover Assembly Visual Inspection (paragraph 8-25).

4. Functional Test every 360-Day Special Inspection cycle (paragraph 8-34).

5. Deflation (paragraph 8-37).

6. Leakage Test (paragraph 8-35).

7. Markings Inspection (paragraph 8-26).

8. Manual Inflation Device Inspection (paragraph 8-28).

9. Installation of CO_2 Cylinders (paragraph 8-32).

10. Bladder Visual Inspection (paragraph 8-27).

11. Packing Procedures (paragraph 8-39).

12. Beaded Inflation Handle Pull Test (paragraph 8-36).

Table 8-2. LPU-37/P Common Repairs and Fabrications

Description	Paragraph Number
Replacement of pull the dot snap fasteners, attachment strap and exterior cover	8-30
Replacement of snap fasteners, beaded handle assembly and exterior cover	8–31

8-23. PLACE-IN-SERVICE INSPECTION. The Place-In-Service Inspection shall consist of the following tasks.

1. 360-Day Special Inspection (paragraph 8-22).

2. Functional Test (paragraph 8-32).

3. Bladder Visual Inspection (paragraph 8-27).

4. Inflation Shell Assembly Visual Inspection (paragraph 8-24).

5. Exterior Cover Assembly Visual Inspection (paragraph 8-25).

8-24. INFLATION SHELL ASSEMBLY VISUAL INSPECTION. To inspect the inflation shell assembly, proceed as follows:

1. Inspect fabric for cuts, tears, deterioration, abrasion, stains, and general cleanliness. If required, clean in accordance with paragraph 8-39.

2. Inspect seams, stitching, and reinforcement patches for condition and security.

3. Inspect zipper for security, stitching, and proper operation.

4. Inspect straps and loops for security and wear.

5. Inspect inflator covers for condition and security of hook and pile tape. Replace as required.

6. Inspect buckle for condition and proper operation. Replace if required.

7. If any component except the buckle or inflation covers is unserviceable, replace entire inflation shell assembly.

8-25. EXTERIOR COVER ASSEMBLY VISUAL INSPECTION. To inspect the exterior cover, proceed as follows:

1. Inspect fabric for cuts, tears, deterioration, abrasion, stains, and general cleanliness. If required, clean in accordance with paragraph 8-39.

2. Inspect seams and stitching for condition and security.

3. Inspect zipper for security, stitching, and proper operation.

4. Inspect snaps for security of attachment, corrosion, damage, wear, and ease of operation.

5. Inspect uni-directional snap fastener assemblies for presence, security of attachment, proper orientation, ease of operation, corrosion, and wear.

NOTE

All uni-directional snap fasteners shall be installed with the dot on the button of the snap fastener socket positioned on the side of the snap fastener to which lift must be applied to disengage the socket from the snap fastener stud.

The two snap fasteners on the exterior cover shall be installed with the dot on each socket button positioned away from the sewn strap attachment.

6. Inspect grommets for security, corrosion, damage, and wear.

7. Inspect identification label for security.

8. If any component is unserviceable, replace entire exterior cover.

8-26. MARKINGS INSPECTION. To inspect and restore marking, proceed as follows:

Materials Required

Quantity	Description	Reference Number
As Required	Ink, Marking, Laundry, Black	SPE-92 NIIN 00-161-4229
	-or-	
As Required	Ink, Drawing, Waterproof, Yellow	A-A-59291 NIIN 00-634-6583

1. Compare markings on preserver to those listed in figure 8-2.

2. Restore faded markings as close to original position as possible.

NOTE

THE 28TH IN-SERVICE MANAGEMENT PANEL MEETING FOR AVIATION LIFE SUPPORT SYSTEMS RESCINDED THE REQUIREMENT FOR THE PACKER TO SIGN THE INSPECTION RECORD PATCH ON LIFE PRESERVERS. THE REQUIREMENT FOR ALL OTHER DOCUMENTATION REMAINS UNCHANGED. THE REASON FOR THIS CHANGE IS THAT MOST HISTORY PATCHES ARE UNREADABLE AND THE PACKER'S AND INSPECTOR'S NAMES ARE DOCUMENTED ON AVIATION CREW SYSTEMS RECORDS.

FLOATATION COLLAR, LOW-PROFILE
AIRCREW, TYPE I, LPU-37/P
CONTRACT NO:
CAGE:
S/N: MFG. DATE:

008002

Figure 8-2. LPU-37/P Markings

8-27. BLADDER VISUAL INSPECTION. To inspect bladders, proceed as follows:

1. Inspect bladders for cleanliness, cuts, tears, punctures, deterioration and abrasions.

2. Check all seams for security.

3. Inspect valve stems for security, cross threading, and cleanliness.

4. Inspect oral inflation valves for cracks, security, ease of operation, and corrosion.

5. If any component of the bladder is unserviceable, replace entire bladder.

8-28. INSPECTION, MANUAL INFLATION DEVICE. Inspection of the Manual Inflation Device is performed as follows:

1. Remove CO_2 cylinder from inflation device.

2. Examine inflation device and actuating lever for corrosion, security, stripped threads, CO_2 cylinder piercing pin for serviceability, and general condition.

a. If CO_2 cylinder piercing pin point is flat, rounded, or otherwise dull or damaged, the inflation device shall be replaced.

3. Check seat seal gasket for condition. Replace if necessary.

4. Operate actuating lever several times. Ensure lever moves freely and piercing pin moves properly inside valve body.

8-29. REPAIR/REPLACEMENT.

8-30. REPLACEMENT OF THE PULL THE DOT SNAP FASTENERS, EXTERIOR COVER ASSEMBLY AND ATTACHMENT STRAP. To replace pull the dot snap fasteners used to secure the attachment straps to the exterior cover, proceed as follows:

Materials Required

Quantity	Description	Reference Number
As Required	Cap, Snap Fastener	MS27983-1 NIIN 00-891-9073
As Required	Socket, Snap Fastener	MS27983-2 NIIN 00-945-2577
As Required	Stud, Snap Fastener	MS27983-3 NIIN 00-276-4908
As Required	Eyelet, Snap Fastener	MS27983-4 NIIN 00-276-4978

1. Remove damaged fastener from cover or attachment strap, using care not to damage cover or webbing.

NOTE

Exterior cover assembly shall be replaced if structural damage occurs during fastener removal or is found after fastener removal.

2. Install new fasteners at existing location as required, ensure pull the dot is installed facing up, nearest top of collar.

8-31. REPLACEMENT OF SNAP FASTENERS, BEADED HANDLE ASSEMBLY AND EXTERIOR COVER. To replace snap fasteners used to secure the beaded handle assembly to the exterior cover assembly, proceed as follows:

Materials Required

Quantity	Description	Reference Number
As Required	Cap, Snap Fastener	MS27981-1B NIIN 00-276-4954
As Required	Socket, Snap Fastener	MS27981-3B NIIN 00-276-4966
As Required	Stud, Snap Fastener	MS27981-4B NIIN 00-901-9660
As Required	Post, Snap Fastener	MS27981-5B NIIN 00-250-6858

1. Remove damaged fastener from cover or beaded handle assembly, using care not to damage cover or handle webbing.

NOTE

Exterior cover or beaded handle assembly shall be replaced if structural damage occurs during fastener removal or if found after fastener removal.

2. Install new fasteners at existing location as required.

8-32. INSTALLATION OF CO_2 CYLINDERS. To install CO_2 cylinders, proceed as follows:

Support Equipment Required

Quantity	Description	Reference Number
1	Scale (Gram)	A-A-52021-1 NIIN 00-514-4117 or equivalent
1	Die, Cylinder Thread Chaser	1842-008-01 (CAGE 03688) NIIN 00-069-4040

Materials Required

Quantity	Description	Reference Number
As Required	Cylinder, CO_2 Type III, 35-Gram	MIL-C-25369C
As Required	Seat Seal	849AML NIIN 01-291-3593

1. Weigh a charged CO_2 cylinder and compare the minimum stamped weight with the scale weight. Discard and replace cylinder if scale weight is 2 grams less than minimum stamped weight.

2. To assure a firm cylinder seat, conduct a cylinder thread count. The threaded portion of the cylinder neck shall contain a minimum of seven full threads to assure a firm cylinder seat within inflator body. Any cylinder with less than seven full threads shall be discarded (figure 8-3).

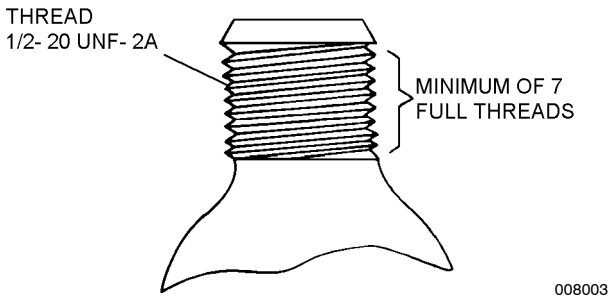

Figure 8-3. Cylinder Thread Count

CAUTION

Steel threads on CO_2 cylinder can cause damage to aluminum threads on inflator if cylinder is not carefully threaded. If binding occurs during installation of cylinder, use thread chaser die on cylinder thread to cut free excessive plating. Reinstall cylinder. If binding still occurs, replace cylinder.

3. Using the cylinder thread chaser die, turn the die to the full extent of the threads on the CO_2 cylinder to cut free any excessive plating covering the threads.

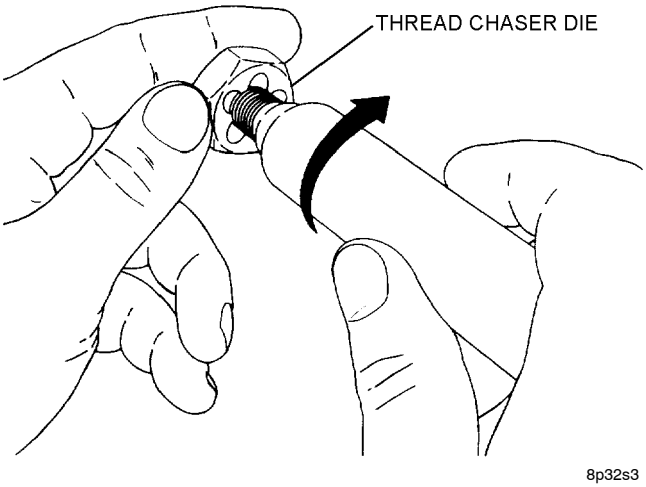

Step 3 - Para 8-32

NOTE

Inspect condition of seat seal gasket and replace as necessary. After each functional check, the seat seal gasket shall be replaced.

4. Remove old seat seal gasket if damaged or if a functional test has been performed.

5. Install new seat seal gasket and carefully thread CO_2 cylinder into inflator body hand tight.

6. Check for secure cylinder fit.

8-33. TESTING.

8-34. FUNCTIONAL TEST. The Functional Test shall be performed prior to placing LPU-37/P in service, every 360-Day Special Inspection, and when a bladder is replaced. The Functional Test is performed as follows:

CAUTION

Ensure work area surrounding preserver is free of foreign objects.

1. Perform beaded handle pull test in accordance with paragraph 8-36.

2. Open exterior cover. Carefully separate zipper by hand, starting at the zipper opening on either side of external cover.

3. Unfold inflation shell assembly.

CAUTION

After each functional test the spent CO_2 cylinders shall be replaced and the CO_2 cylinder piercing pins shall be inspected for serviceability.

4. Actuate inflation assemblies.

5. The life preserver shall fully inflate to design shape, without evidence of restriction, in less than 30 seconds.

6. If the life preserver does not properly inflate, determine cause. Ensure stem and valve are clean and free of foreign matter.

7. If correction is made, the life preserver shall be functionally tested again.

8. Deflate life preserver in accordance with paragraph 8-37 to remove all CO_2.

8-35. LEAKAGE TEST. The LPU-37/P shall be subjected to a Leakage Test each 360-Day Special Inspection. To perform a Leakage Test, proceed as follows:

Support Equipment Required

Quantity	Description	Reference Number
1	Test Fixture (or equivalent)	No Number

CAUTION

Ensure test area is free of foreign objects.

1. Ensure all carbon dioxide has been removed from any preserver which has been functionally tested.

2. Remove LH and RH inflator assemblies and discard gaskets.

3. Unzip inflation shell assembly and remove top and bottom bladders from shell.

CAUTION

If 3-way valve is not used, measuring device valve must be closed when air feed valve is open. Damage may occur to oral inflation valve if air supply pressure entering the life preserver exceeds 10 psi during this test.

NOTE

Refer to figure 8-4, Leakage Test Fixture Schematic. If test fixture meeting requirements indicated is not available, one must be fabricated in order to perform required leakage test.

If a suitable air source is not available, water-pumped nitrogen (BB-N-411) may be substituted.

4. Unlock oral inflation valve and connect to test fixture. Rotate valve to air supply position and inflate bladder. Alternately position valve between measuring device, vent, and air supply until proper pressure of 3.25 psig is attained.

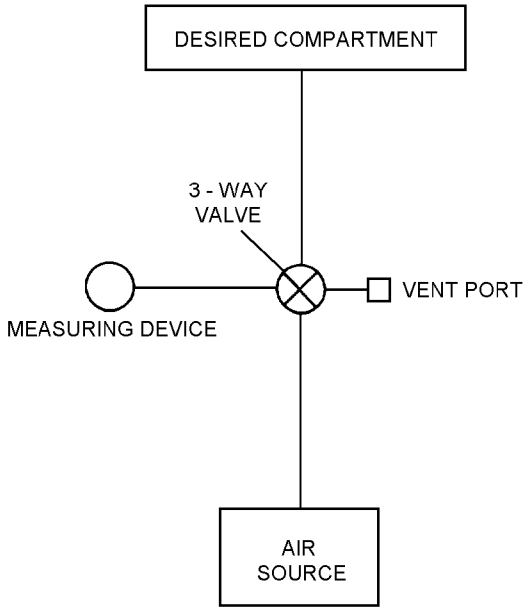

008004

Figure 8-4. Leakage Test Fixture Schematic

UNCORRECTED TEST READING 1.70 PSI

	TEMP.	BARO.
START	75° F	29.90 IN. Hg
END	70° F	29.70 IN. Hg
DIFFERENCE	- 5° F	-0.20
CORRECTION	+0.155	-0.098

TEMP. CORRECTION	+ 0.155
+ BARO. CORRECTION	- 0.098
CORRECTION	+ 0.057
UNCORRECTED READING	1.700 PSI
+ CORRECTION	+ 0.057
CORRECTED READING	1.757 PSI

EXAMPLE

008005

Figure 8-5. Temperature and Barometric Pressure Test Record

5. Securely shut off the air supply. Then after allowing a minimum of 15 minutes for pressure to stabilize, the pressures shall be readjusted, as necessary, to the leakage test pressures. After ensuring proper test pressures, record time.

6. Disconnect air supply and check for leaks. Ensure all valves are closed.

7. Record temperature and barometric pressure (figure 8-5).

8. After a minimum of 1 hour after completing step 5, record test pressure of both bladders. Test pressure of each bladder shall not decrease to less than 2.50 psig for a life preserver bladder, from a maximum test pressure of 3.25 psig.

9. Record temperature and barometric pressure (figure 8-5). Correct the test pressure for any changes in temperature and barometric pressure using tables 8-3 and 8-4.

CAUTION

Do not submerge life preservers in water to check for leaks.

10. If pressure of bladder is below 2.50 psig, inflate to correct leakage test pressure and coat bladder with a soap solution to determine if a leak exists. If a leak exists, replace bladder. If no leak is found, check test fixture.

Table 8-3. Temperature Conversion Chart

Temperature Difference (°F)	Correction (psi)
1	0.031
2	0.062
3	0.093
4	0.124
5	0.155
6	0.186
7	0.217
8	0.248
9	0.279
10	0.310
Rise in temperature: subtract from gage reading. Fall in temperature: add to gage reading.	

Table 8-4. Barometric Pressure Conversion Chart

Press. Diff. (inHG)	Corr. (psi)	Press. Diff. (inHG)	Corr. (psi)	Press. Diff. (inHG)	Corr. (psi)	Press. Diff. (inHG)	Corr. (psi)	Press. Diff. (inHG)	Corr. (psi)
0.01	0.005	0.16	0.078	0.31	0.152	0.46	0.225	0.61	0.299
0.02	0.010	0.17	0.083	0.32	0.157	0.47	0.230	0.62	0.304
0.03	0.015	0.18	0.088	0.33	0.162	0.48	0.235	0.63	0.309
0.04	0.020	0.19	0.093	0.34	0.167	0.49	0.240	0.64	0.314
0.05	0.025	0.20	0.098	0.35	0.172	0.50	0.245	0.65	0.319
0.06	0.030	0.21	0.103	0.36	0.176	0.51	0.250	0.66	0.323
0.07	0.035	0.22	0.108	0.37	0.181	0.52	0.254	0.67	0.328
0.08	0.040	0.23	0.113	0.38	0.186	0.53	0.260	0.68	0.333
0.09	0.045	0.24	0.118	0.39	0.191	0.54	0.265	0.69	0.338
0.10	0.049	0.25	0.123	0.40	0.196	0.55	0.270	0.70	0.343
0.11	0.054	0.26	0.127	0.41	0.201	0.56	0.275	0.71	0.348
0.12	0.060	0.27	0.132	0.42	0.206	0.57	0.279	0.72	0.353
0.13	0.064	0.28	0.137	0.43	0.211	0.58	0.284	0.73	0.358
0.14	0.069	0.29	0.142	0.44	0.216	0.59	0.289	0.74	0.363
0.15	0.073	0.30	0.147	0.45	0.221	0.60	0.294	0.75	0.368

Rise in pressure: add to gage reading.
Fall in pressure: subtract from gage reading.

11. Deflate bladder in accordance with paragraph 8-37.

12. Reassemble preserver and pack in accordance paragraph 8-40.

13. Records Updating. Make necessary entries on appropriate form in accordance with OPNAVINST 4790.2 Series.

8-36. BEADED INFLATION HANDLE PULL TEST. To perform the beaded inflation handle pull test, proceed as follows:

1. Manually release beaded handles.

2. If snap fasteners do not release, inspect male and female snap fasteners for damage. Replace entire beaded inflation handle if required and repeat step 1. Replace exterior cover if required.

3. Attach gauge to webbing between third and fourth bead on inflation handle.

4. Hold inflation lanyard securely against exterior cover to ensure life preserver actuating lever will not be pulled.

5. Add a 25-pound force to check the security of the beaded handle attachment to the inflation lanyard.

6. Examine lanyard for frays, ruptures, thin spots, and security. If unsatisfactory, replace entire beaded inflation handle.

8-37. DEFLATION.

8-38. To deflate the life preserver, proceed as follows:

Support Equipment Required

Quantity	Description	Reference Number
1	Pump, Rotary Vacuum	NIIN 00-052-5015 or equivalent
As Required	Hose, 3/8- or 1/2-inch inside diameter, Rubber	—

1. Lay bladders/inflation shell assembly on a flat surface. Smooth bladder/inflation shell assembly toward oral inflation tube.

CAUTION

Ensure all air is removed from bladder to prevent possible expansion of trapped air with increasing altitude and for ease of packing.

2. Apply a vacuum to remove all air through oral inflation tube. (Bladder should be wrinkled/puckered around oral inflation tube when all air has been removed.)

3. Turn oral inflation valve locking nut to lock position to ensure no air returns to the bladder.

8-39. PACKING PROCEDURES.

NOTE

The requirement for the packer to sign the Inspection Record Patch on the life preserver was rescinded by the 28th In-Service Management Panel. Justification: Most inspection record history patches become unreadable and packer's and inspector's names are documented on Aviation Crew Systems records. All other documentation requirements remain unchanged.

8-40. Pack the LPU-37/P life preserver as follows:

Support Equipment Required

Quantity	Description	Reference Number
6	Spring Clamps (packing aids)	P/N 3201 NIIN 01-470-1447
4	Bladder Assembly Keeper (packing aids)	P/N 101202 NIIN 01-469-9567

Support Equipment Required (Continued)

Quantity	Description	Reference Number
1	Zipper Slider (packing aid)	P/N 101201 NIIN 01-467-6537
1	Pump, Rotary Vacuum	NIIN 00-052-5015 or equivalent
As Required	Hose, 3/8 or 1/2 inch inside diameter, rubber	—
1	Torque Wrench, In-lb	P/N 6106 or equivalent

Notes 1. The plastic tips of the Spring Clamps (packing aids) may become loose and become a FOD hazard. To correct and prevent this condition, remove plastic tips from clamp, coat metal tip of clamp with adhesive (MIL-A-5540A) and reinstall plastic tips while adhesive is still tacky.

Materials Required

Quantity	Description	Reference Number
As Required	Thread, Nylon, Size E	P/N V-T-295E NIIN 00-204-3884
2	Gasket Kit	P/N 105AS100-6
1	Needle	—

NOTE

Reference to LH and RH refers to wears left hand and right hand orientation.

1. Ensure life preserver has received Place-in-Service inspection in accordance with paragraph 8-23.

2. Remove air from inner inflatable assembly (110230-1) and outer inflatable assembly (110240-1). Lay each assembly on a flat surface. Smooth bladder toward oral inflation tube. Apply a vacuum to remove all air through oral inflation tube. Turn locking nut to lock position to ensure that no air returns to inflation assembly.

3. Place inner inflatable assembly (with oral inflator on LH side) into inflation shell assembly (110221-1) through the zipper openings. Insert valve stem and oral inflation tube through respective holes in inflation shell assembly. Work wrinkles out until bladder is smooth and flat.

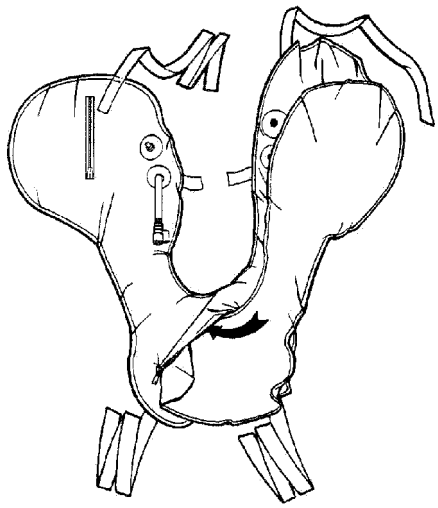

8p40s3

Step 3 - Para 8-40

4. Place outer inflation shell assembly (with oral inflator on RH side into inflation shell assembly in the same manner as step 3.

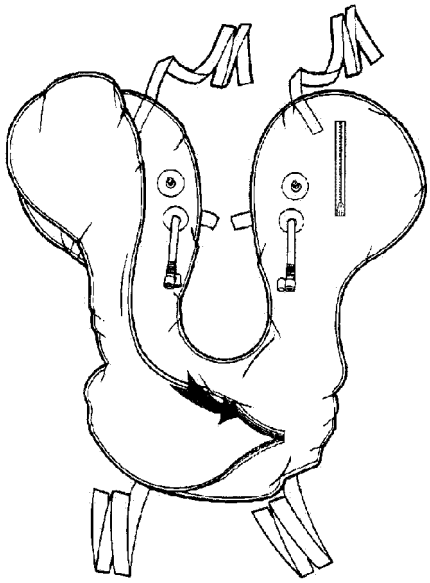

8p40s4

Step 4 - Para 8-40

5. Zip the inflation shell assembly closed (3 places).

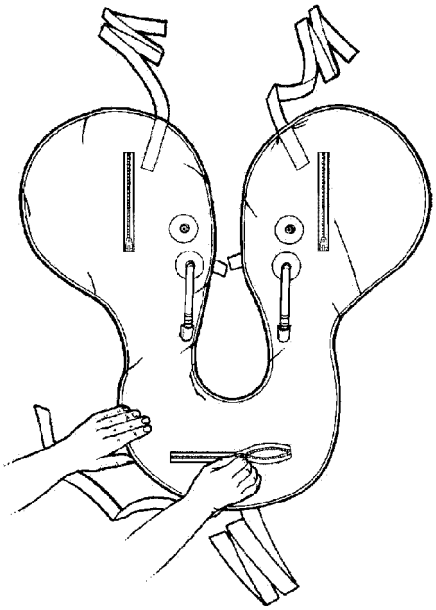

8p40s5

Step 5 - Para 8-40

6. Attach the black portion of the inflation lanyard on the LH beaded handle (103251-3) to the manual inflation device using a larks head knot. Repeat for the RH beaded handle (103251-4).

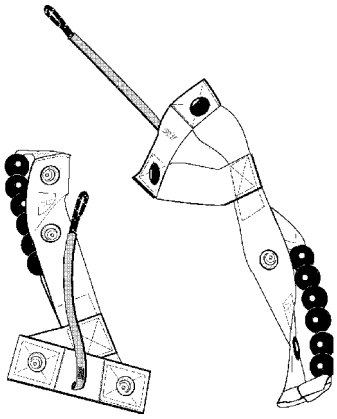

8p40s6

Step 6 - Para 8-40

WARNING

Ensure gaskets are properly positioned. The upper gasket has a larger internal diameter than the lower gasket.

7. Install new gaskets from gasket kit by placing lower gasket (8492AM) on the valve stem first.

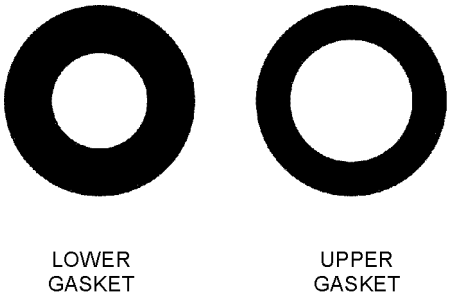

8p40s7

Step 7 - Para 8-40

WARNING

Inflator lever shall face outboard. Activation arm will pull downward.

8. Carefully install manual inflation device with LH beaded handle onto the LH valve stem. Carefully install manual inflation device with RH beaded handle onto the RH valve stem.

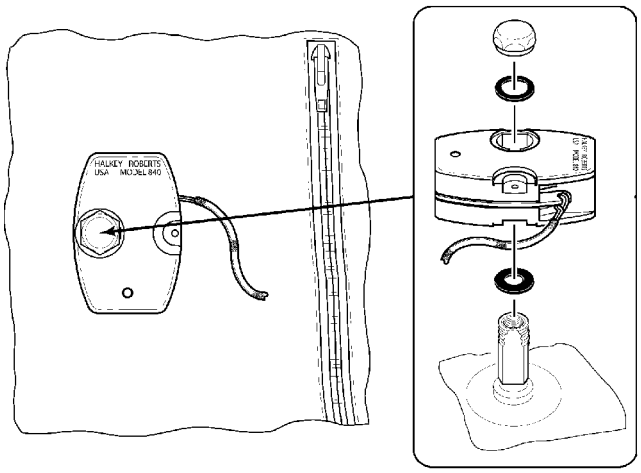

8p40s8

Step 8 - Para 8-40

9. Install upper gasket onto valve stem.

10. Tighten cap nut on valve stem and torque to a value of 15 ± 1 in-lb.

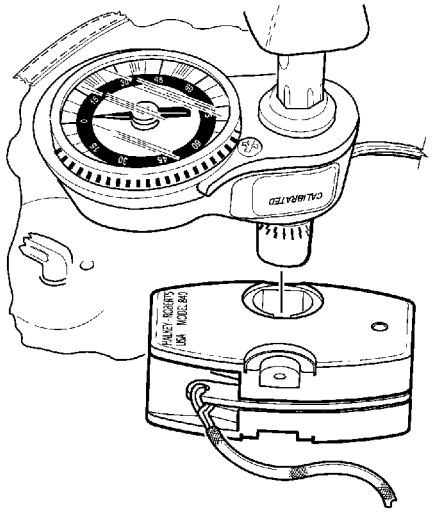

8p40s10

Step 10 - Para 8-40

11. Grasp the 2-inch diameter reinforcement patch on the inflation shell assembly around the inflator in one hand and the manual inflation device in the other hand. Holding the inflation shell assembly firmly, rotate the manual inflation device clockwise and counterclockwise checking for trapped material. If inflation shell assembly is binding, remove cap nut, manual inflation device, and both upper and lower gaskets, discard gaskets and repeat steps 7 through 11.

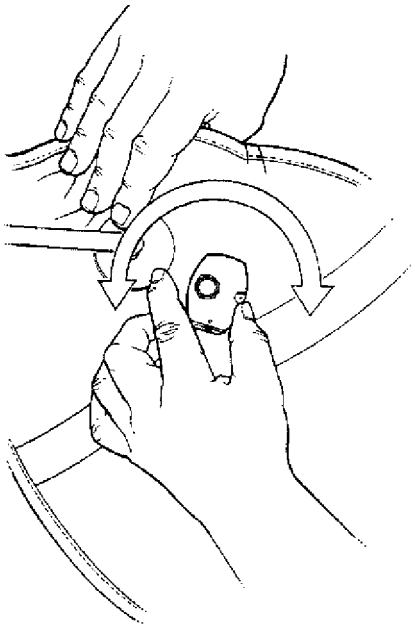

8p40s11

Step 11 - Para 8-40

NOTE

Manual inflation device comes with seat seal gasket installed for CO_2 cylinder installation.

12. Ensure seat seal gasket is in place. Install both LH (102228-2) and RH (102228-1) inflation covers assemblies behind and around inflators. Insert oral inflation tubes through holes in upper portion of inflation cover assemblies and into retaining loops attached to inflation shell assembly. Ensure CO_2 cylinders have been inspected in accordance with paragraph 8-23. Install both CO_2 cylinders, MIL-C-25369C, Type III, hand tight. Check LH and RH larks head knots for security and ensure proper routing of lanyards, under (behind) manual inflation device. Close inflation covers assemblies and secure with hook and pile fastener.

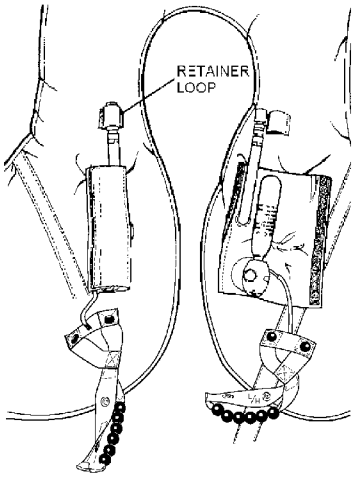

8p40s12

Step 12 - Para 8-40

CAUTION

Avoid placing spring clamps directly onto zipper closure of the inflation shell assembly. Spring clamps placed on zipper closures may damage bladders.

13. Place top of inflation shell assembly towards packer. Just below top zipper, make an approximately 3-inch inboard fold. Make additional accordion folds until all the shell assembly is lying flat and folded. This should be a 3 or 4 fold of 3 inches laying flat. Clamp as necessary.

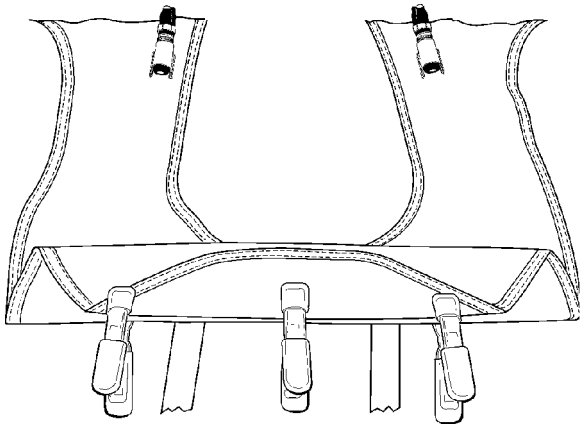

8p40s13

Step 13 - Para 8-40

14. Rotate assembly so that the right-hand lobe is toward packer.

15. Fold the RH lobe under, in line with the outboard side of the inflation shell assembly. Clamp as necessary.

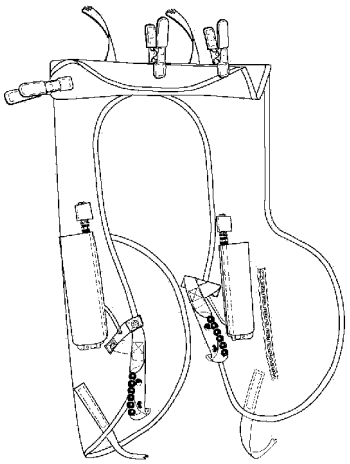

8p40s15

Step 15 - Para 8-40

16. Fold top portion of bladder lobe under inflation shell assembly and clamp. Ensure chest strap is accessible.

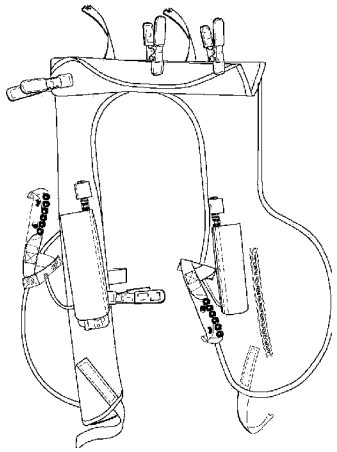

8p40s16

Step 16 - Para 8-40

17. Fold RH lobe back under inflation shell assembly approximately 2 1/2 inches or the width of the inflation shell assembly.

18. Fold RH lobe under inflation shell assembly even with end of inflation shell assembly. Clamp.

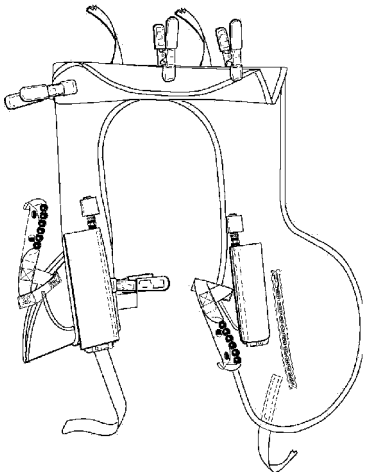

8p40s18

Step 18 - Para 8-40

19. Fold remaining bladder assembly over inflation assembly, roll excess under even with edge of inflator assembly, and secure with hook and pile packing aids as needed.

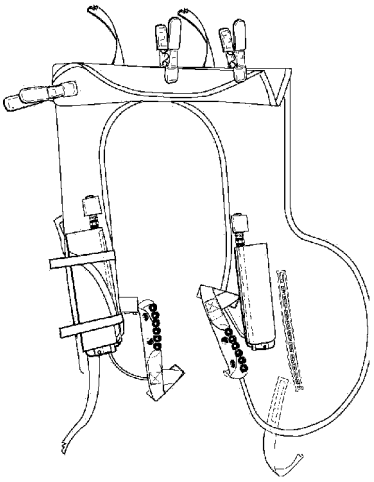

8p40s19

Step 19 - Para 8-40

NOTE

When placing packing aid (hook and pile) around folded inflation shell assembly, ensure that the RH lower strap is retained by packing aid and facing out the bottom.

20. Rotate assembly so that the left-hand lobe is toward packer.

21. Fold the LH lobe under, in line with the outboard side of the inflation shell assembly. Clamp as necessary.

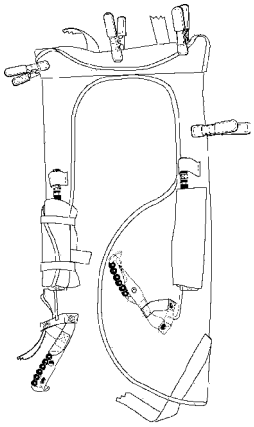

8p40s21

Step 21 - Para 8-40

22. Fold top portion of LH lobe under inflation shell assembly and clamp. Ensure chest strap is accessible.

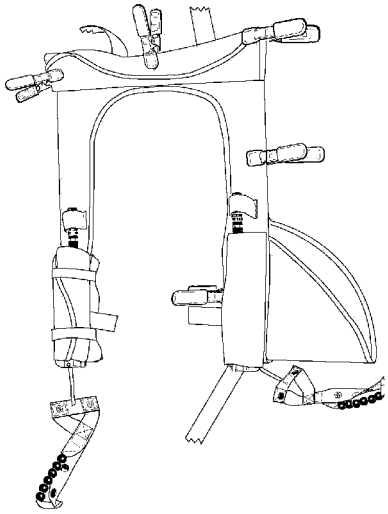

8p40s22

Step 22 - Para 8-40

23. Fold LH lobe back under inflation shell assembly. Approximately 2 1/2 inches or the width of the inflation shell assembly.

24. Fold LH lobe under inflation shell assembly even with inflation assembly. Clamp.

25. Fold remaining bladder assembly over inflation shell assembly, roll excess under even with edge of inflator assembly, and secure with hook and pile packing aids as needed.

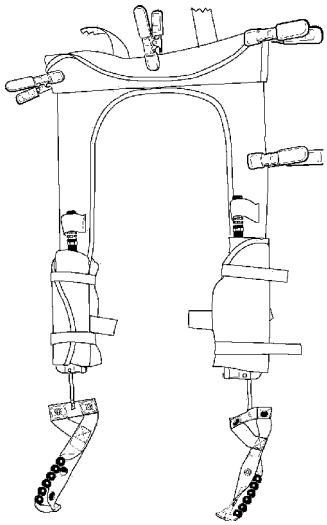

8p40s25

Step 25 - Para 8-40

NOTE

When placing packing aid (hook and pile) around folded inflation shell assembly, ensure that the LH lower strap is retained by packing aid and facing out the bottom.

26. Fold top inflation shell corners under to form a 45-degree angle on both sides of inner shell assembly. Clamp as required.

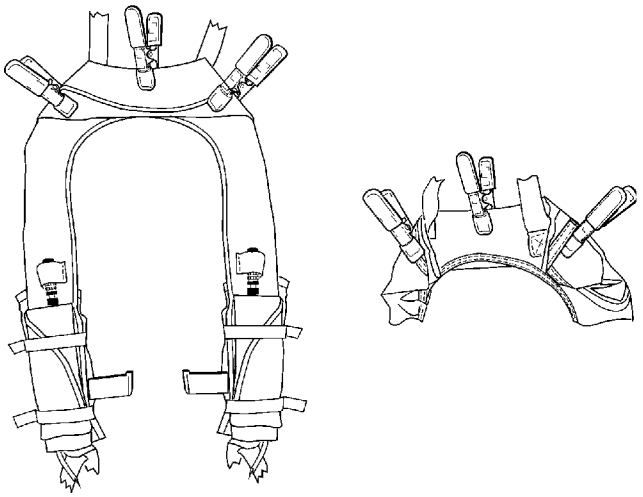

8p40s26

Step 26 - Para 8-40

27. Ensure that all folds are as previously directed.

28. Attach zipper slider, flat opening first, on the exterior cover assembly (111210-1), starting on the RH lower bottom grommet side. Attach the slider to bottom side of the zipper chain. The zipper slider pull-tab will be on the outside of the exterior cover.

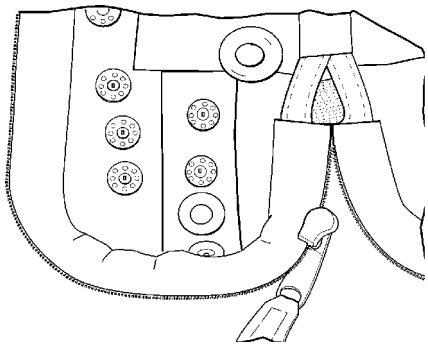

8p40s28

Step 28 - Para 8-40

29. Bring zipper slider all the way around to the LH side, top section of the exterior cover assembly.

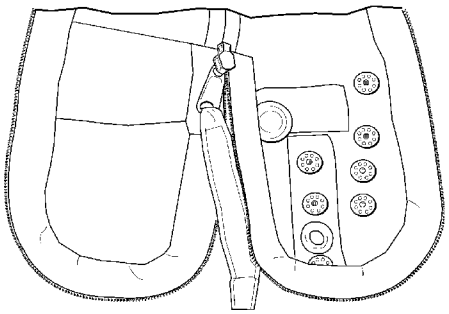

8p40s29

Step 29 - Para 8-40

30. Place folded inflation shell assembly into the exterior cover assembly with the LH lobe above the zipper slider.

31. Position the red inflation lanyard to pass between the zipper halves. Connect zipper half to zipper slider.

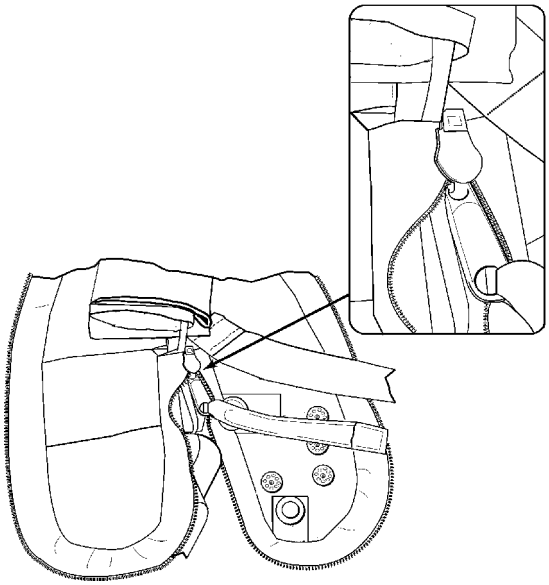

8p40s31

Step 31 - Para 8-40

32. Pull slider down to where top of slider is between first two snaps.

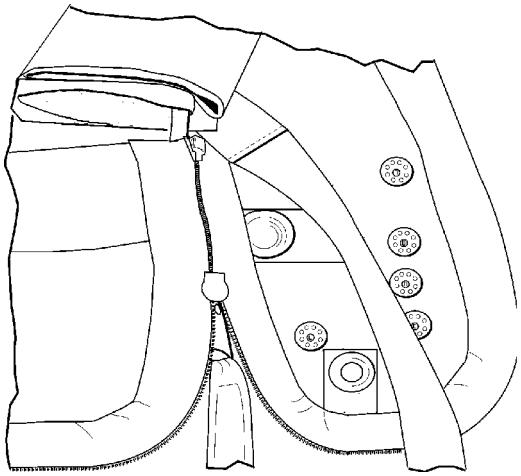

8p40s32

Step 32 - Para 8-40

33. Separate the ends of the zipper halves down to the zipper slider.

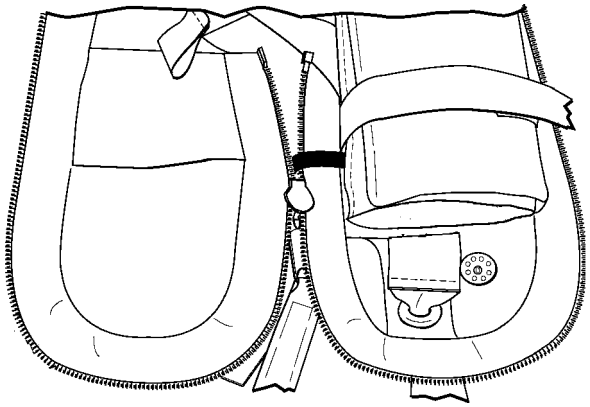

8p40s33

Step 33 - Para 8-40

34. Route red inflation lanyard under inflator and between zipper halves.

WARNING

Failure to separate the zipper halves and proper routing of the red inflation lanyard as directed in steps 33 and 34 may result in a life preserver malfunction.

35. Route lower attachment strap through lower grommet and pull inflation assembly to end of exterior cover.

36. Put LH chest strap through chest strap grommet. Put upper LH back strap through grommet. Put upper RH back strap through grommet. Put RH chest strap through chest strap grommet. Put RH lower strap through lower grommet.

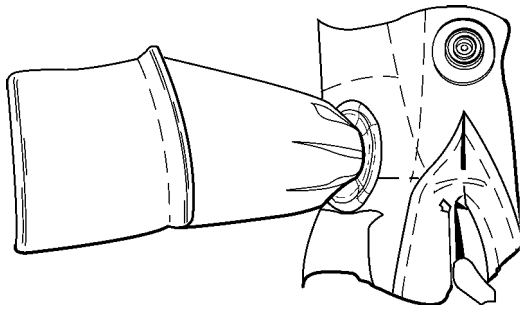

8p40s36

Step 36 - Para 8-40

37. Close container assembly and pull slider assembly around outboard edge of the outer shell assembly. Close exterior cover carefully. Do not force zipper slider.

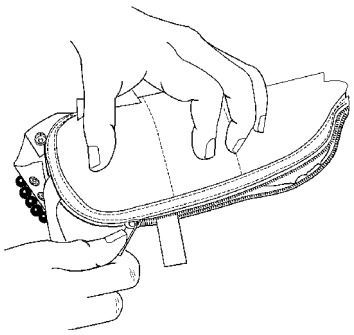

8p40s37

Step 37 - Para 8-40

38. Turn life preserver over to attach LH beaded handle. Attach snap above lanyard to exterior cover. Secure snap at 90-degree elbow of webbing to exterior cover and snap in place. Attach beaded handle snaps to exterior cover.

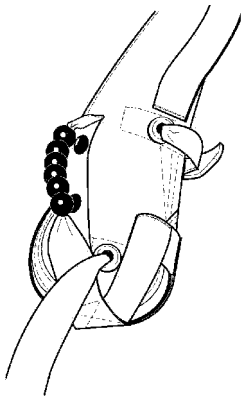

8p40s38

Step 38 - Para 8-40

39. Pack folded inner shell assembly into exterior cover, fold inner shell if necessary to fit into exterior cover. Continue removing packing aids as you progress.

40. Approaching the RH lobe, stuff/force the folded inner shell towards the top of the container to give more room for the zipper slider as it rounds the end of the lobe. Continue closing the container and remove packing aids.

41. Ensure red inflation lanyard is routed under inflator assembly.

42. Check for zipper separation before removal of zipper slider. If separation is found, un-zip slider past point of separation, re-clamp as needed, and re-close exterior cover.

43. Remover zipper slider and retain for tool inventory.

44. Turn life preserver over to attach RH beaded handle to the exterior cover. Attach snap above lanyard to exterior cover. Attach snap above lanyard to exterior cover. Secure snap at 90-degree elbow of webbing to exterior cover and snap in place. Attach beaded handle snaps to exterior cover.

NOTE

Beaded handle must not trap lower attachment strap leading from grommet on back of exterior cover. Lower strap must be able to fall free from grommet.

45. Insert the two elastic straps through the 3/4-inch webbing loop and snap in place.

46. Grasp ends of the upper and lower LH strap and pull until internal stops are tight against grommets. Repeat for RH side.

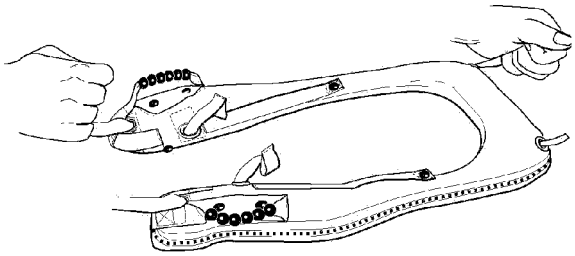

8p40s46

Step 46 - Para 8-40

47. Turn life preserver over with front side up.

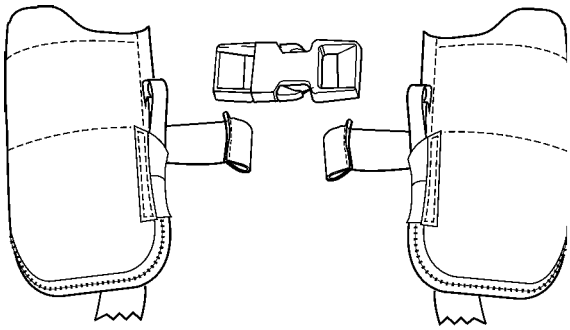

8p40s47

Step 47 - Para 8-40

NOTE

Use only buckle P/N 101-1100-5614. Do not substitute.

48. Weave LH buckle strap through LH (male) buckle half as shown. Route webbing inboard to outboard. Weave the RH buckle strap through RH (female) buckle half in the same manner as the LH side. Connect buckle halves together and pull tight. Tack LH and RH buckle webbing through the center of both pieces of the webbing, using 3 cord thread waxed, single. Use a surgeon's knot followed by a square knot.

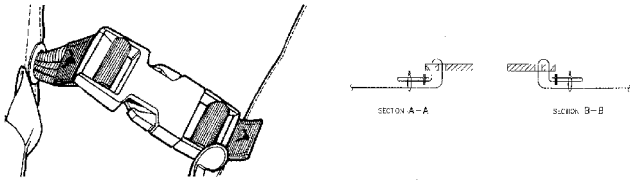

8p40s48

Step 48 - Para 8-40

49. Safety tie beaded handles top snap webbing, below first snap, to exterior cover, route under webbing on exterior cover, with one turn of size E thread waxed, single. Tie with a surgeon's knot followed by a square knot.

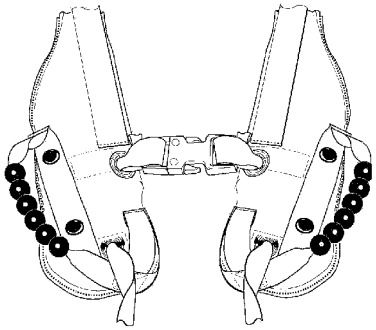

8p40s49

Step 49 - Para 8-40

WARNING

Do not tie down beaded handles.

50. Inspect the zipper edge to ensure no coil separation. If separation is found, the exterior cover must be reassembled. Inspect male and female buckle halves for proper installation.

51. Account for all tools and packing aids.

52. Document in accordance with OPNAVINST 4790.2 Series.

8-41. CLEANING AND SALTWATER DECONTAMINATION.

8-42. CLEANING. If required to clean any portion of the life preserver, remove any detachable items and proceed as follows:

Materials Required

Quantity	Description	Reference Number
As Required	Detergent, General Purpose	MIL-D-16791 NIIN 00-282-9699
As Required	Lint-free Cloth, Type II	MIL-C-85043 NIIN 00-044-9281

CAUTION

Solvents shall not be used to clean life preservers.

1. Prepare solution of detergent consisting of 1/4 to 1/2 ounce of detergent per gallon of water.

2. Apply cleaning solution to soiled area with a spray or sponge.

3. Allow solution to remain on surface for several minutes, then agitate with a soft brush or rag.

4. Rinse surface thoroughly with water, wipe with a cloth or sponge. Repeat this application until surface is free from all solution.

5. Dry life preserver with a lint-free cloth and allow to dry completely.

8-43. SALTWATER DECONTAMINATION. After every immersion in salt water, the life preserver shall be rinsed in clean fresh water as follows:

1. Rinse all components in fresh water.

2. Inflate bladder with air and allow to dry.

3. Clean all components in accordance with paragraph 8-42.

4. Perform 360-Day Special Inspection in accordance with paragraph 8-22.

Section 8-4. Illustrated Parts Breakdown (IPB)

8-44. GENERAL.

8-45. This section lists and illustrates the assemblies and detail parts of the LPU-37/P Low Profile Floatation Collar.

8-46. The Illustrated Parts Breakdown should be used during maintenance when requisitioning and identifying parts.

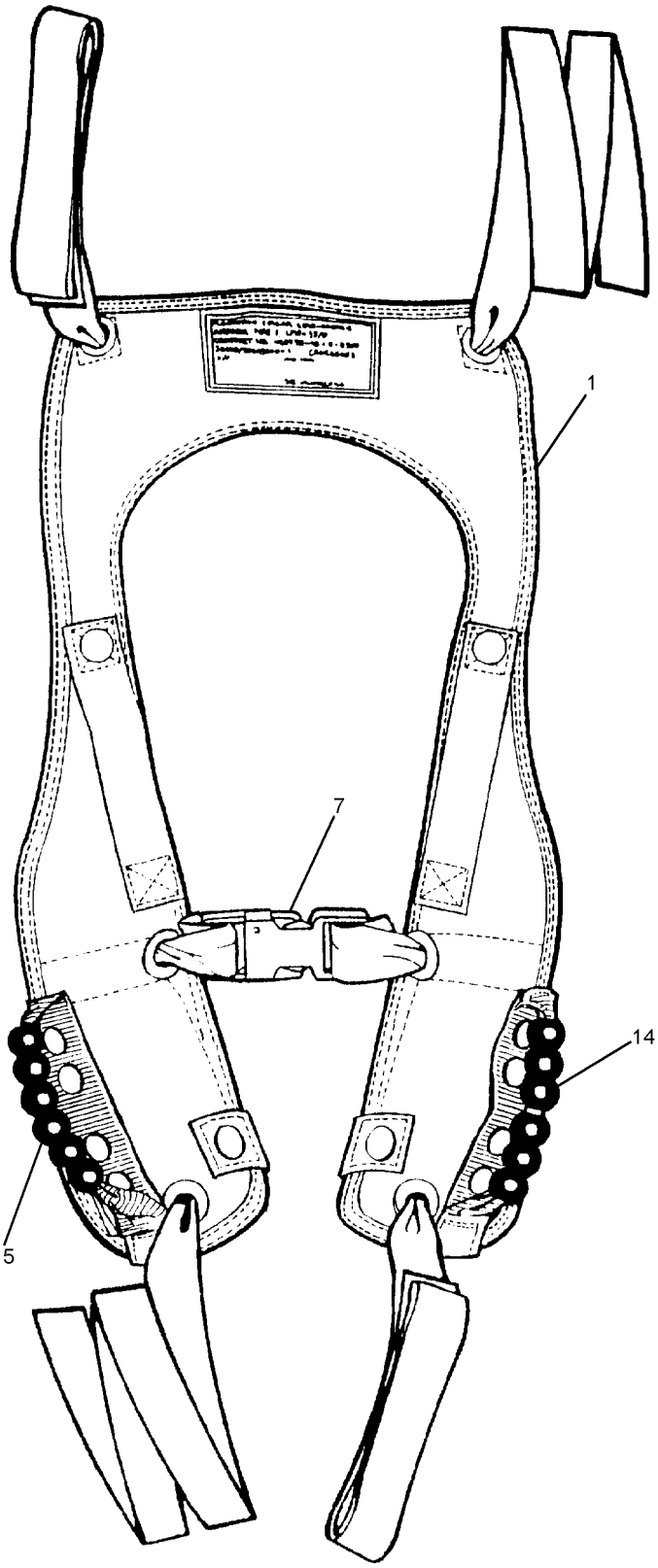

00800601

Figure 8-6. LPU-37/P, Low Profile Floatation Collar, Life Preserver (Sheet 1 of 2)

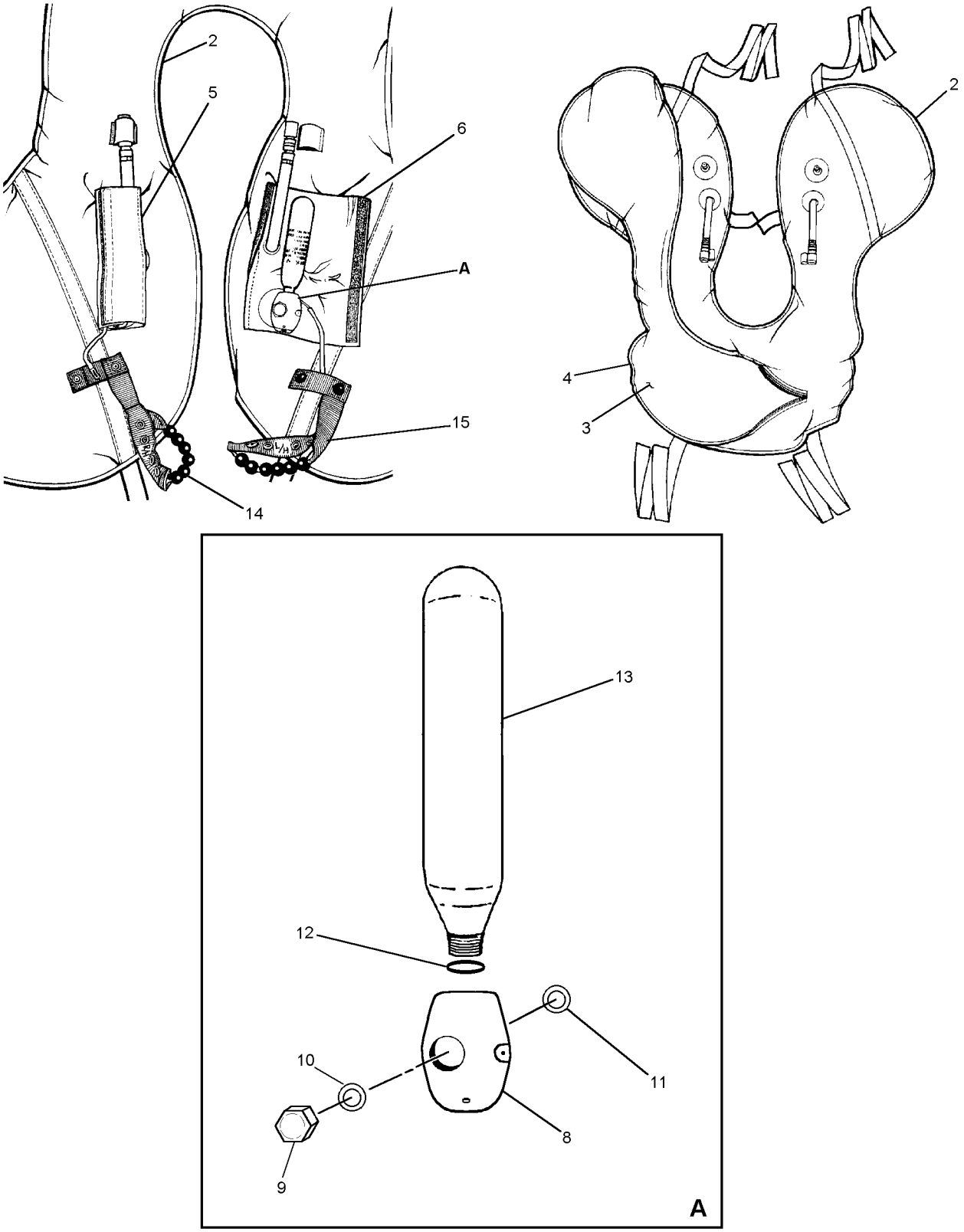

00800602

Figure 8-6. LPU-37/P, Low Profile Floatation Collar, Life Preserver (Sheet 2 of 2)

Figure and Index Number	Part Number	Description 1 2 3 4 5 6 7	Units Per Assembly	Usable On Code
8-6	830AS270-1	LPU-37/P, Low Profile Floatation Collar, ... Life Preserver	REF	
-1	111210-1	. EXTERIOR COVER ASSEMBLY/CASING . . . . . . (CAGE 05DK2)	1	
-2	110221-1	. INFLATION SHELL ASSEMBLY . . . . . . (CAGE 05DK2)	1	
-3	110230-1	. INNER (BOTTOM) INFLATABLE . . . . . . ASSEMBLY (CAGE 05DK2)	1	
-4	110240-1	. OUTER (TOP) INFLATABLE ASSEMBLY . . . . . . (CAGE 05DK2)	1	
-5	102228-1	. INFLATOR COVER RH (CAGE 05DK2)	1	
-6	102228-2	. INFLATOR COVER LH (CAGE 05DK2)	1	
-7	101-1100-5614	. PLASTIC BUCKLE, Male/Female (Note 3) . . . . . (CAGE 02768)	1	
-8	840AMLS	. INFLATION DEVICE, Manual . . . . . . (CAGE 30003) (ATTACHING PARTS)	2	
-9	52A6600	. VALVE CAP, Inflator (CAGE 80049)	2	
-10	105AS100-3	. GASKET, Top (CAGE 30003) (Note 1)	2	
-11	8492AM	. GASKET, Bottom (CAGE 30003) (Note 1) . . . . . . ---*---	2	
-12	849AML	. . SEAT SEAL	2	
-13	MIL-C-25369C	. CO_2 CYLINDER, Type III, 35 Gram	2	
-14	103251-4	. BEADED HANDLE RH (CAGE 05DK2)	1	
-15	103251-3	. BEADED HANDLE LH (CAGE 05DK2)	1	

Notes:
1. Top and bottom gaskets are obtained from Valve Stem Kit, P/N 105AS100-6, NIIN 00-113-8290, which contains one top and one bottom gasket.
2. Packing Aids for LPU-37/P: Zipper Slide Assembly, P/N 101201 (CAGE 05DK2) Bladder Assembly Keeper (4), P/N 101202 (CAGE 05DK2).
3. No substitutes authorized.

NUMERICAL INDEX

Part Number	Figure and Index Number	SM&R Code
MIL-C-25369C	8-6-13	PAGZZ
101-1100-5614	8-6-7	PAGZZ
102228-1	8-6-5	PAGZZ
102228-2	8-6-6	PAGZZ
103251-4	8-6-14	PAGZZ
103251-3	8-6-15	PAGZZ
105AS100-3	8-6-10	PAGZZ
105AS100-4	8-6-11	PAGZZ

Part Number	Figure and Index Number	SM&R Code
110221-1	8-6-2	PAGZZ
110230-1	8-6-3	PAGZZ
110240-1	8-6-4	PAGZZ
111210-1	8-6-1	PAGZZ
52A6600	8-6-9	PAGZZ
830AS270-1	8-6	PCGZZ
840AMLS	8-6-8	
849AML	8-6-12	PAGZZ

CHAPTER 9

RESERVED

THIS PAGE INTENTIONALLY LEFT BLANK.

CHAPTER 10

RESERVED

THIS PAGE INTENTIONALLY LEFT BLANK.

CHAPTER 11

RESERVED

THIS PAGE INTENTIONALLY LEFT BLANK.

CHAPTER 12

RESERVED

THIS PAGE INTENTIONALLY LEFT BLANK.

CHAPTER 13

DELETED

THIS PAGE INTENTIONALLY LEFT BLANK.

CHAPTER 14

LPU-21/P SERIES LIFE PRESERVER ASSEMBLY

Section 14-1. Description

14-1. GENERAL.

WARNING

The LPU-21B/P and LPU-21C/P life preserver assemblies shall not be used in ejection seat aircraft.

14-2. The LPU-21/P series life preserver assembly is authorized for use by all aircrew personnel wearing compatible flight clothing. It is designed as a constant wear item for use with the survival vest and will not interfere with the removal of the nonintegrated parachute harness. Survival item pouches are attached to the life preserver casing. The dye marker and signal flares are not initially supplied and must be individually requisitioned. Refer to table 14-1 and see figures 14-1 and 14-2.

14-3. Modifications to the LPU-21B/P life preserver have resulted in a new letter designation being assigned to the preserver. For the sake of clarity, the term LPU-21/P series is used where appropriate. The newly procured LPU-21/P series life preserver will be the LPU-21C/P. The LPU-21B/P life preserver will remain in service until beyond capability of repair.

14-4. The LPU-21C/P flotation assembly may be used in conjunction with the LPU-21D/P casing assembly. This configuration has been designated LPU-21C(V)1/P. See Chapter 26.

NOTE

The use of the LPU-21D/P flotation assembly with the LPU-21C/P casing is not authorized.

14-5. CONFIGURATION.

NOTE

The LPU-21B/P and LPU-21C/P life preserver assemblies shall not be configured with the FLU-8A/P automatic inflation device. The LPU-21/P and LPU-21A/P life preserver assemblies used pull toggles for activation. After incorporation of Aircrew System Change 405, which directs installation of beaded inflation handles, the LPU-21/P and LPU-21A/P were updated to become the LPU-21B/P. The beaded inflation handles improve accessibility and provide the inflation system with a multidirectional pull capability. Manual inflation occurs when both beaded inflation handles are pulled in a natural, slightly down and straight out position from the body.

CAUTION

Use only Polychloroprene adhesives and Polychloroprene-coated cloth and patches on Polychloroprene-coated LPU-21/P life preserver assemblies.

14-6. The LPU-21/P series life preserver assembly weighs 4 pounds (without survival items) and provides a minimum of 65 pounds of buoyancy. The flotation assembly is constructed of polychloroprene-coated nylon cloth and consists of two independent flotation chambers. One chamber consists of the left waist lobe joined by a tube to the right collar lobe. This chamber is serviced by the carbon dioxide inflation assembly and oral inflation

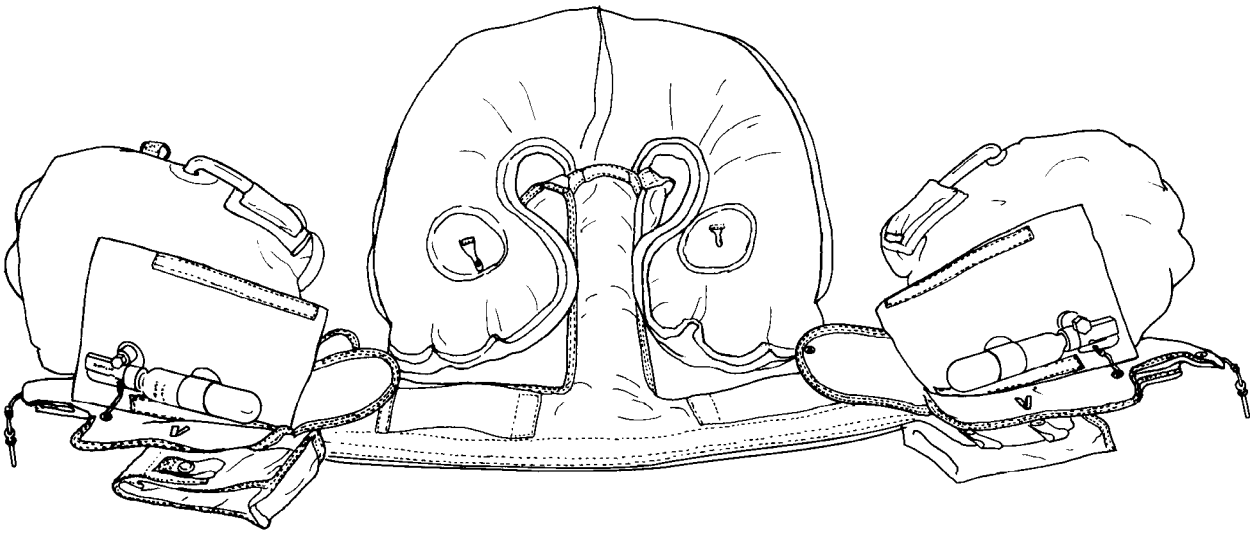

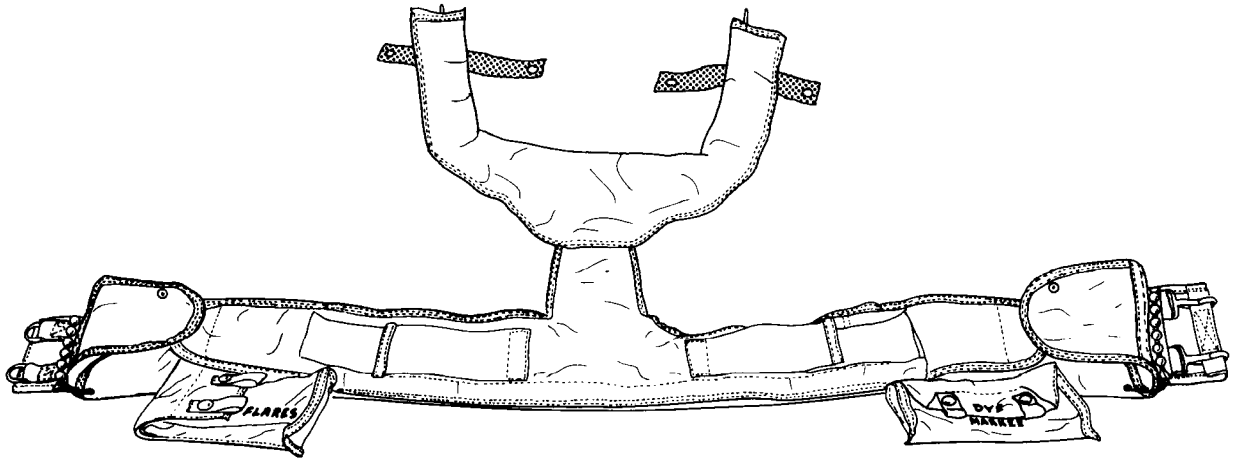

10140001

Figure 14-1. LPU-21/P Series Life Preserver Assembly

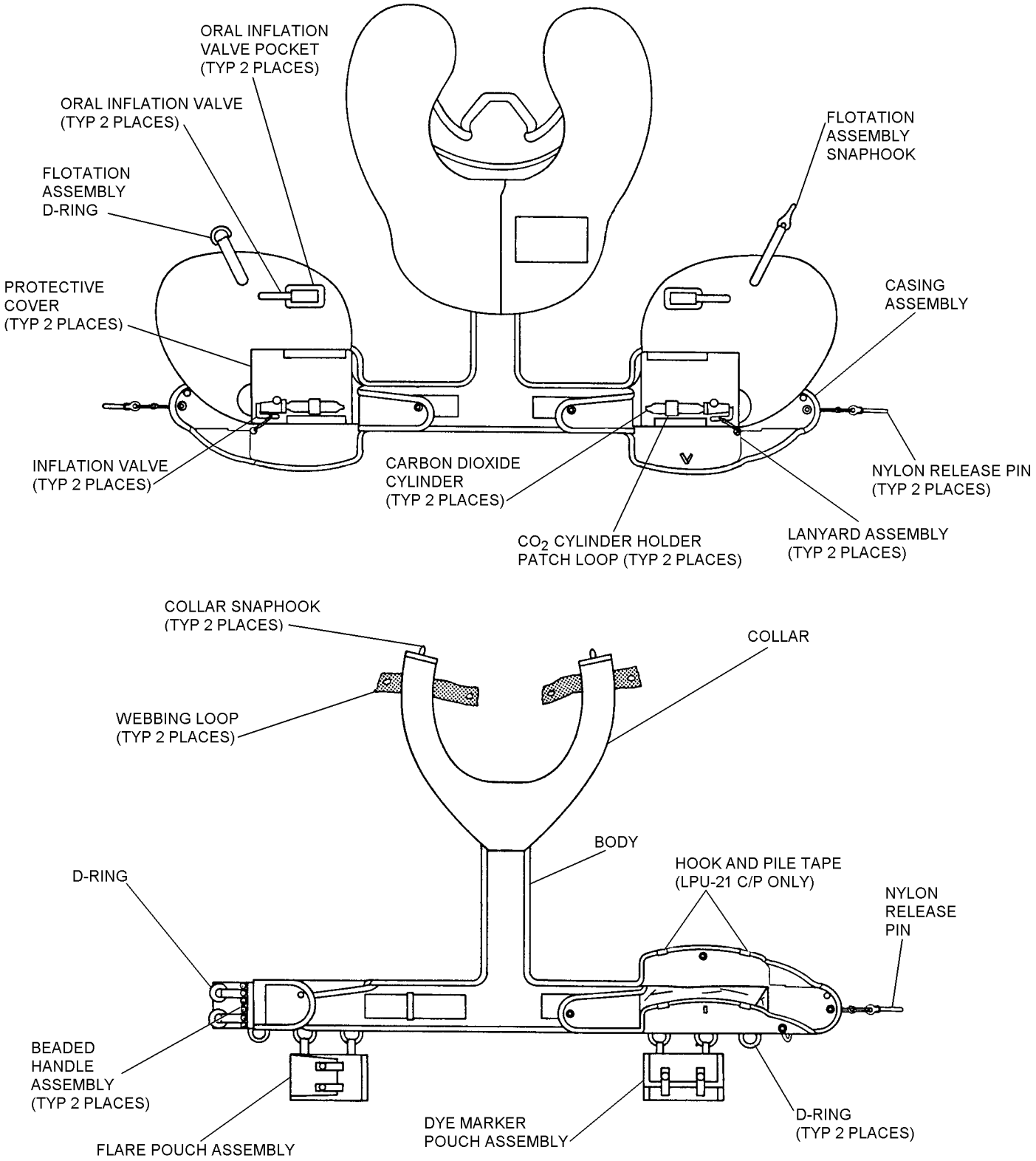

Figure 14-2. LPU-21/P Series Life Preserver Assembly, Parts Nomenclature

valve attached to the left waist lobe. The other chamber consists of the right waist lobe joined by a tube to the left collar lobe. This chamber is serviced by the carbon dioxide inflation assembly and oral inflation valve attached to the right waist lobe. The two chambers are sewn together at the collar lobes. See figures 14-1 and 14-2.

14-7. Each waist lobe of the flotation assembly is equipped with an attachment patch used for securing the casing assembly by means of rivets. In addition, the right waist lobe is equipped with one snaphook and the left waist lobe is equipped with one D-ring. The snaphook and the D-ring are used to secure the waist lobes together after inflation. Survival item pouches are fastened to the life preserver D-rings with directional snap fasteners.

14-8. Each collar lobe of the flotation assembly is equipped with a snaphook for attachment to the survival vest D-rings (parachute risers are routed outside of the collar lobes). In addition, an inspection record patch is also provided on a collar lobe.

14-9. The casing assembly is constructed of fire retardant aramid cloth and protects the flotation assembly. The casing assembly also provides for size adjustment and attachment to the wearer. The casing assembly consists of the adjustable casing, an adjustable webbing belt, belt keepers and D-rings, and the front connector assembly. See figures 14-1 and 14-2.

14-10. The webbing belt, attached to the inside waist portion of the casing assembly, provides for waist size adjustment from 30 to 44 inches. The webbing belt keeper loops retain the webbing belt and provide for attachment of the Survival Vest about the wearer's waist. In addition, there are six D-rings secured to the webbing belt keeper loops, used for attachment of the survival item pouches, a raft retaining line, and other accessories.

14-11. Hook and pile tapes, attached to the outside waist portion of the casing, are used for slack adjustment. In addition, hook and pile tapes, attached about the periphery of the collar casing and the lower edge of the back portion of the casing, are used to enclose the casing assembly about the flotation assembly.

14-12. The casing assembly is secured around the wearer's waist by the front connector assembly, which consists of two snaphooks and two D-rings backed by webbing pads for comfort.

14-13. Each inflation assembly is made up of a carbon dioxide cartridge and an inflation valve. The inflation assemblies are connected to valve stems attached to each waist lobe (each valve stem is equipped with a check valve to prevent leakage). See figures 14-1 and 14-2.

14-14. APPLICATION.

14-15. The LPU-21/P series life preserver assembly is authorized for use by all aircrew personnel wearing compatible flight clothing. LPU-21/P series life preservers that are modified to incorporate the FLU-8/P series automatic inflation device will be used in ejection seat type aircraft only. LPU-21/P series life preservers modified with the FLU-8A/P inflator will be redesignated the LPU-23A/P life preserver. Refer to Chapters 16 and 18 for information pertaining to the LPU-23/P series.

14-16. FUNCTION.

14-17. The LPU-21/P series is manually inflated by pulling both inflation assembly beaded handles in a natural, slightly down and straight out position from the body. This action removes the retaining pins securing the casing assembly about the waist lobes and actuates the inflation assemblies. The hook and pile tapes securing the casing assembly about the collar lobes will separate as the preserver inflates.

NOTE

The casing must be manually opened and the flotation assembly unfolded prior to inflating a preserver through the oral inflation valve.

14-18. In an emergency situation, the oral inflation valves may be used to top-off an inflated preserver, maintain inflation of a leaky preserver or inflate a chamber if an inflation assembly malfunctions. The oral inflation valves are also used to inflate a preserver with air during an inspection test and to evacuate a preserver in preparation for packing.

Table 14-1. LPU-21/P Series Survival Items

Description	Quantity Required	Reference Number	NIIN	SM&R Code
Signal, Smoke and Illumination, Marine, MK-124 MOD 0 (Note 1)	2	—	01-030-8330	PA--Z
Dye Marker (Note 1)	2	MIL-S-17980	00-270-9986	PAOZZ
Notes: 1. Optional equipment at the discretion of the Squadron Commander.				

Section 14-2. Modifications

14-19. GENERAL.

14-20. The LPU-21/P series life preserver assembly shall be upgraded by comparing the configuration of the assembly with modifications listed in table 14-2. Common repairs and fabrication instructions to maintain serviceability are listed in table 14-3.

NOTE

After incorporating the FLU-8A/P automatic inflation device, the LPU-21/P series life preserver was redesignated the LPU-23/P series. See Chapters 16 and 18.

LPU-21/P series life preservers modified by ACC 523 shall be redesignated LPU-27/P22P-7(V). See Chapter 17.

Table 14-2. LPU-21/P Series Directives

Description of Modification	Application	Modification Code
Add extension panel to casing webbing belt.	All LPU-21/P series life preservers used by aircrew personnel of patrol aircraft and helicopters.	66-523
After addition of extension panel, redesignate LPU-21/P series life preserver LPU-22/P22P-7(V). See Chapter 17.		

Table 14-3. LPU-21/P Common Repairs and Fabrications

Description of Repair or Fabrication	Paragraph Number
Determination of Repairability	14-56
Casing Repair Procedures	14-57
Casing Grommet Replacement	14-58
Cementing Life Preservers	14-59
Patching Life Preservers	14-60
Replacement of Oral Inflator Valve	14-62
Recementing of Bladder Fin Seams	14-63
Fabrication of Slip-on Pockets for Life Preserver Hardware	14-64
Replacement of Flare and Dye Marker Pouch Snaphooks	14-65
Replacement of Collar Lobe Snaphooks	14-66
Flare Pouch Repair	14-67
Disassembly of the Life Preserver	14-68
Reassembly of Life Preserver	14-69
Replacement of Beaded Inflation Handle Assembly	14-70
Repair of Corroded CO_2 Inflation Valve	14-71
Repair of Top and Bottom Gaskets	14-72
Replacement of Check Valve Assembly	14-73
Fabrication of Protective Cover Assembly	14-74
Addition of Collar Lobe Webbing Loops	14-75
Fabrication and Installation of Locking Pin Cover	14-76

Section 14-3. Maintenance

14-21. GENERAL.

14-22. This section contains information on inspection, disassembly, repair/replacement, testing, and reassembly of the LPU-21/P Series life preserver.

14-23. INSPECTION.

14-24. All life preservers shall be subjected to Preflight, Special and Calendar/Phase Inspections.

14-25. The Preflight Inspection shall be performed on life preservers prior to each flight by the aircrewmember to whom the life preserver is assigned. The Preflight Inspection shall be performed on life preservers installed in aircraft prior to each flight by assigned aircrewmembers.

14-26. The Special Inspection shall be performed on all aircraft installed life preservers at intervals not to exceed 30 days. The inspection shall be performed at the organizational level of maintenance by personnel assigned to the Aviator's Equipment Branch.

14-27. Make necessary entries on appropriate form in accordance with OPNAVINST 4790.2 Series. The 30-Day Special Inspection may be recorded on a separate history card from the history card recording Calendar/Phase Inspections, functional checks, and modifications.

NOTE

The Calendar inspection interval for life preservers assigned selected air reserve aircrewmembers has been extended to 180 days vice 90 days, providing preservers are stowed under controlled conditions.

14-28. The Calendar/Phase Inspection shall be performed on all life preservers prior to placing in service. The Inspection cycle thereafter shall be as follows: personal issue life preservers shall be inspected once every 90 days. Aircraft-installed life preserver inspection shall coincide with the inspection cycle of the aircraft in which installed. See applicable Planned Maintenance System (PMS) publications for specific intervals. In no case shall the interval exceed 231 days. Unless operational requirements demand otherwise, the life preserver Calendar/Phase Inspection shall be performed by the intermediate level of maintenance or above. The functional test shall be performed prior to placing in service, every fourth inspection cycle thereafter, and whenever an inflation assembly is replaced. The leakage test shall be performed during every inspection cycle. If inspection indicates damage, complete appropriate forms in accordance with OPNAVINST 4790.2 Series and forward entire assembly to supply. Refer to paragraph 14-56 for determination of repairability.

14-29. QUALITY ASSURANCE. Properly detailed procedures present a logical sequence for the inspection process. The more critical procedures are underlined to designate steps which require a Quality Assurance inspection to assure performance of specific requirements. After the underlined step is performed by the Aircrew Survival Equipmentman, the procedure shall be verified before the next step is performed. This verification shall be performed by a Collateral Duty Inspector or Quality Assurance Representative (CDI, CDQAR, or QAR). Work Center supervisors are primarily responsible for quality assurance within their centers. OPNAVINST 4790.2 Series permits supervisors to nominate their more experienced personnel to serve as quality assurance inspectors. Nominated personnel shall be screened and examined by the Quality Assurance Officer prior to their designation as Quality Assurance Inspectors or Quality Assurance Representatives by the Commanding Officer. Under no circumstances shall an Aircrew Survival Equipmentman perform his own quality assurance inspection.

14-30. PREFLIGHT/SPECIAL INSPECTION. To perform a Preflight/Special Inspection, proceed as follows:

WARNING

Ensure that the beaded inflation handles are readily accessible. Beaded inflation handles shall be secured with four snap fasteners to the life preserver end flap.

CAUTION

Do not open any sealed or safety-wired/safety tied portions of preserver for Pre-flight/Special Inspection.

1. Inspect exposed metal parts for corrosion and damage.

2. Inspect for presence, security of attachment and, if applicable, operation of survival items.

3. Inspect casing fabric for cuts, tears, abrasions, security of stitching, and other damage.

4. Ensure beaded inflation handles are secured to snap fasteners. Inspect safety ties on beaded inflation handles. The beaded inflation handle safety ties may be replaced without removing the life preserver from service.

5. Inspect safety ties on locking pins.

6. Inspect rivets securing flotation assembly to casing for presence and security of attachment.

7. Inspect hook and pile tape closure at collar for separation; fasten as necessary.

8. Adjust and don preserver to ensure proper fit.

9. If any discrepancy is noted, the preserver shall be removed from service and repaired in accordance with procedures in this chapter.

14-31. ACCEPTANCE/CALENDAR/PHASE INSPECTION. The Acceptance/Calendar/Phase Inspection consists of the following tasks:

1. Beaded Inflation Handle Inspection

2. Case, Container/Pouch Inspection

3. Functional Test (every fourth inspection cycle)

4. Visual Inspection

5. Life Preserver Configuration

6. General Inspection

7. Markings Inspection

8. Survival Items Inspection

9. Inflation Assembly Inspection

10. Beaded Inflation Handle Pull Test

11. Leakage Test

12. Records Updating

13. Repacking

14-32. BEADED INFLATION HANDLE INSPECTION. Inspect beaded inflation handle for the following:

1. Attachment of inflation lanyard to beaded handle.

2. Attachment of locking pin lanyard to beaded handle. Overhand knot on locking pin lanyard shall be within 3/4 inch from eye of pin.

3. Corrosion on snap fasteners and ease of operation.

4. Cuts, tears, deterioration, abrasion, stains, and general cleanliness of fabric.

5. Presence of safety tie on beaded inflation handle.

14-33. CASE, CONTAINER/POUCH INSPECTION. To inspect cases, containers, and/or pouches, proceed as follows:

1. Inspect fabric for cuts, tears, deterioration, abrasion, stains, and general cleanliness.

2. Inspect seams for proper adhesion or stitching.

3. Inspect straps and loops for security and wear.

4. Inspect any other parts for wear, damage, and security.

NOTE

Life preservers missing the D-rings used to attach dye marker and flare pouches shall be considered serviceable provided the aircrewmember to whom it is issued does not desire to utilize the pouches.

5. All hardware for security of attachment, corrosion, damage, wear and, if applicable, ease of operation.

NOTE

All uni-directional snap fasteners shall be installed with the dot on the button of the snap fastener socket positioned on the side of the snap fastener to which lift must be applied to disengage the socket from the snap fastener stud.

6. Inspect uni-directional snap fastener assemblies for presence, security of attachment, proper orientation, ease of operation, corrosion, and wear.

7. If any discrepancies are found, the case, container, or pouch shall be repaired or removed from service as deemed appropriate by the inspection activity.

14-34. FUNCTIONAL TEST. To perform a functional test, proceed as follows:

CAUTION

Ensure area surrounding preserver is free of foreign objects.

1. Completely open preserver casing prior to conducting functional test. Both release pins shall be removed from their respective loops, the collar hook and pile tape fasteners shall be separated, and the waist and collar lobes shall be completely unfolded and laid out flat.

2. Actuate inflation assemblies.

3. The preserver shall fully inflate to design shape, without evidence of restriction, in less than 30 seconds.

4. If preserver does not properly inflate, determine cause. Ensure stem and valve are clean and free of foreign matter.

5. If correction is made, the preserver shall be functionally tested again.

6. Deflate preserver in accordance with paragraph 14-35 to remove all CO_2.

14-35. DEFLATION. To deflate a life preserver, proceed as follows:

Support Equipment Required

Quantity	Description	Reference Number
1	Pump, Rotary Vacuum (or equivalent)	NIIN 00-052-5015 (90567)
As Required	Hose, 3/8- or 1/2-inch Inside Diameter, Rubber	—

1. Attach one end of rubber hose to vacuum pump.

2. Deflate through oral inflation valves. Unlock oral inflation valve, hold in open position, and hold vacuum pump hose against end of oral inflation valve. When compartment is collapsed, release oral inflation valve. Screw lock closed.

14-36. VISUAL INSPECTION.

CAUTION

Remove all carbon dioxide cylinders prior to inflating life preserver with air.

NOTE

If suitable air source is not available, water-pumped nitrogen (FED SPEC BB-N-411) may be substituted.

14-37. Prior to visually inspecting a life preserver assembly, the life preserver shall be inflated with air to 1.0 psig.

14-38. LIFE PRESERVER CONFIGURATION. The life preserver shall be updated by comparing it to figures 14-1 and 14-2, and Section 14-4.

14-39. GENERAL INSPECTION. Examine life preservers for the following:

NOTE

Refer to the referenced paragraph number at end of inspection step for repair procedures.

1. Preserver fabric for cuts, tears, punctures, deterioration and abrasion. Refer to paragraph 14-60 for repair instructions.

2. Seam tapes for proper adhesion. Refer to paragraph 14-63 for repair instructions.

3. Valve inlet stems for security.

4. Oral inflation valve(s) for cracks, security, ease of operation, and corrosion.

5. Patches for proper adhesion and wear. Refer to paragraph 14-60 for repair instructions.

6. Any other parts for wear or other damage.

7. All hardware for security of attachment, corrosion, damage, wear and, if applicable, ease of operation.

8. Preservers for stains, dirt, and general cleanliness. Refer to paragraph 14-50 for cleaning instructions.

9. Cross threading and/or loose manifold nuts.

14-40. MARKINGS INSPECTION. To inspect and restore marking, proceed as follows:

Materials Required

Quantity	Description	Reference Number
As Required	Ink, Marking, Laundry, Black	SPE-92 NIIN 00-161-4229
	-or-	
As Required	Ink, Drawing, Waterproof, Yellow	A-A-59291 NIIN 00-634-6583

1. Compare markings on preserver to those listed in table 14-4.

2. Restore any faded markings.

3. Deleted.

4. Correct any markings which do not agree with the applicable table. Paint out old marking and enter new marking as close to proper position as possible.

14-41. SURVIVAL ITEMS INSPECTION. To inspect survival items, proceed as follows:

1. Inventory all items by checking items against table 14-1. Replace any missing or unsatisfactory item.

NOTE

NAVAIR 13-1-6.5, Rescue and Survival Equipment contains detailed information on the inspection of survival items.

2. Inspect all items for damage, spent contents and expired service life. Replace as necessary.

3. Operate all items which are not intended for one-time use. Replace as necessary.

14-42. INFLATION ASSEMBLY INSPECTION. To inspect life preserver inflation assemblies, proceed as follows:

1. Loosen CO_2 cylinder locking screws, if present, and remove CO_2 cylinders from valve assembly.

2. Examine inflation device, actuating lever and lanyard, and locking pins for fraying, corrosion, stripped threads, and other damage.

3. If required, remove any sharp edges from valve with a fine round file.

4. Operate actuating lever three or four times. Ensure that lever moves freely and ensure that piercing pin moves properly inside valve body. Inspect point of piercing pin for serviceability. If point is flat, rounded, dull, or otherwise worn or damaged, replace inflation assembly.

NOTE

Each time inflation assembly gaskets or inflation assembly is removed and replaced for any reason, a functional test shall be conducted. Refer to paragraph 14-34. Use new gaskets when replacing device.

5. If any discrepancy is noted in device that is not repairable in accordance with paragraph 14-71, remove assembly and install a new inflation device.

6. If CO_2 cylinder locking screws are installed, remove them.

Table 14-4. LPU-21/P Series Life Preserver Markings

Marking (Note 1)	Location	Letter Height
P/N 68A73H1-101 (LPU-21B/P) P/N 68A73H1-103 (LPU-21C/P	Outside surface of collar delivery tube case.	Optional
CASING, LIFE PRESERVER, LPU-21B/P 974AS103-301 CONTRACT NO. [applicable number] MANUFACTURER [applicable number] DATE OF MANUFACTURE [month and year] SERIAL NO. [applicable number]	Center of casing waist section (inside)	5/16 inch 3/16 inch
CASING, LIFE PRESERVER, LPU-21C/P 975AS103-303 CONTRACT NO. [applicable number] MANUFACTURER [applicable number] DATE OF MANUFACTURE [month and year] SERIAL NO. [applicable number]	Center of casing waist section (inside)	5/16 inch 3/16 inch
DYE MARKER	Pouch (right side)	1/2 inch
FLARES	Pouch (left side)	1/2 inch
LIFE PRESERVER LPU-21/P SERIES SPEC. MIL-L-81561 CONTRACT NO. [applicable number] MANUFACTURER [name of manufacturer] DATE OF MANUFACTURE [month and year] SERIAL NO. [applicable number]	Center of flotation tube waist section	5/16 inch 3/16 inch
Notes: 1. Replacement markings shall be stamped or stenciled using waterproof black ink.		

14-43. BEADED INFLATION HANDLE PULL TEST. To perform the beaded inflation handle pull test, proceed as follows:

Support Equipment Required

Quantity	Description	Reference Number
1	Gage, Dial, Push/Pull, 0 to 50 lb	DPP-50 or equivalent NIIN 00-473-0108

1. Ensure that CO_2 cylinder has been removed. Actuate the inflator assembly. All snap fasteners on beaded inflation handle must be fully engaged.

2. Attach gage to webbing between third and fourth bead on inflation handle.

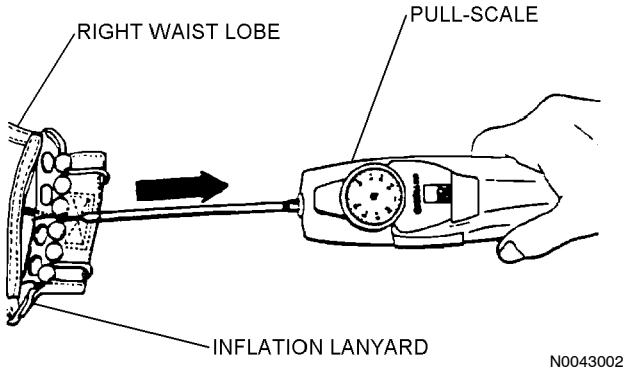

Step 2 - Para 14-43

3. Hold inflator steady. Slowly exert a 25-pound straight pull on webbing. All snap fasteners should release at or before 25 pounds.

4. If all snap fasteners do not release at or before the 25 pound limit, inspect male and female snap fasteners for damage. Replace the entire beaded inflation handle assembly if required and repeat steps 1 through 4.

5. If the snap fasteners release properly, leave the pull scale attached, add an additional 25 pound force to check the security of the beaded inflation handle attachment to the inflation lanyard. Examine the lanyard for frays, ruptures, thin spots, split casing, and security of stitches and knots. If unsatisfactory, replace the entire beaded inflation handle. Refer to paragraph 14-70.

14-44. LEAKAGE TEST. All life preservers shall be subjected to a leakage test each Calendar/Phase Inspection. To perform a leakage test proceed in accordance with paragraph 14-46.

14-45. Test Fixture. A suggested test fixture, consisting of a three-way valve, pressure gage, and adapters for compartments being tested, is shown in Chapter 3. Fixtures must be fabricated to meet the requirements of the schematic shown in figure 14-3.

14-46. Test Procedure. To test life preservers, using test fixture shown in Chapter 3, proceed as follows:

CAUTION

Ensure test area is free of foreign objects.

1. Ensure all carbon dioxide has been removed from any preserver which has been functionally tested.

CAUTION

If 3-way valve is not used, measuring device valve must be closed when air feed valve is open.

Damage may occur to oral inflation valve if air supply pressure entering the life preserver exceeds ten (10) psi during this test.

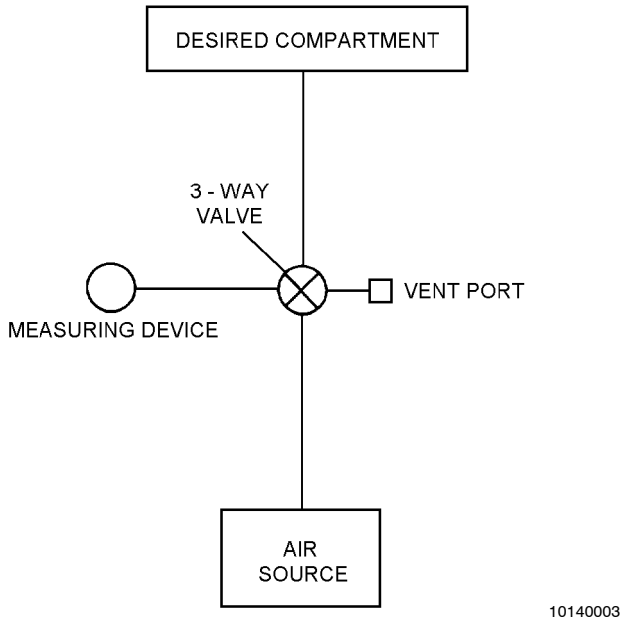

Figure 14-3. Test Fixture Schematic

NOTE

If a suitable air source is not available, water-pumped nitrogen (BB-N-411) may be substituted.

2. Unlock oral inflation valve and insert into rubber hose. Rotate valve to air supply position and inflate chamber. Alternately position valve between measuring device, vent and air supply until proper pressure of 2.0 psig is attained in both chambers.

3. The air supply shall be securely shut off and after a minimum of 15 minutes, the pressure shall be readjusted, if necessary, to the original pressure of 2.0 psig in both chambers simultaneously. Record time.

4. Disconnect air supply and check for leaks. Ensure all valves are closed.

5. Record temperature and barometric pressure.

6. After a minimum for 4 hours after completing step 3, record test procedure of both chambers. Test pressure shall not decrease to less than 1.6 psig for a life preserver chamber, from a maximum test pressure of 2.0 psig.

7. Record temperature and barometric pressure and correct test pressure for any changes in temperature and barometric pressure. Refer to tables 14-5 and 14-6.

EXAMPLE

UNCORRECTED TEST READING 1.70 PSI

	TEMP.	BARO.
START	75° F	29.90 IN. Hg
END	70° F	29.70 IN. Hg
DIFFERENCE	- 5° F	-0.20
CORRECTION	+0.155	-0.098

TEMP. CORRECTION	+ 0.155
+ BARO. CORRECTION	- 0.098
CORRECTION	+ 0.057

UNCORRECTED READING	1.700 PSI
+ CORRECTION	+ 0.057
CORRECTED READING	1.757 PSI

N0046007

Step 7 - Para 14-46

Table 14-5. Temperature Conversion Chart

Temperature Difference (°F)	Correction (psig)
1	0.031
2	0.062
3	0.093
4	0.124
5	0.155
6	0.186
7	0.217
8	0.248
9	0.279
10	0.310
Rise in temperature: subtract from gage reading. Fall in temperature: add to gage reading.	

8. If pressure of chamber is below 1.60 psig inflate to leakage test pressure and coat with a soap solution to locate leaks. Mark leak areas. Rinse preserver with fresh water, air dry and repair in accordance with paragraph 14-60.

9. Deflate preserver in accordance with paragraph 14-35.

10. Ensure that inflation valve lever is cocked. Install CO_2 cylinder in accordance with paragraph 14-52.

14-47. RECORDS UPDATING. Make necessary entries on appropriate form in accordance with OPNAVINST 4790.2 Series.

14-48. CLEANING AND SERVICING.

14-49. Cleaning and servicing consist of cleaning the life preserver, case, container and/or pouch, installation of the inflation valve protective covers and CO_2 cylinders.

14-50. CLEANING OF LIFE PRESERVER CASINGS/BLADDERS. To clean life preservers, machine washing is preferred on casings, containers, and pouches. Alternate method is by hand. Remove any survival items and other detachable items and proceed as follows:

Table 14-6. Barometric Pressure Conversion Chart

Press. Diff. (inHG)	Corr. (psi)	Press. Diff. (inHG)	Corr. (psi)	Press. Diff. (inHG)	Corr. (psi)	Press. Diff. (inHG)	Corr. (psi)	Press. Diff. (inHG)	Corr. (psi)
0.01	0.005	0.16	0.078	0.31	0.152	0.46	0.225	0.61	0.299
0.02	0.010	0.17	0.083	0.32	0.157	0.47	0.230	0.62	0.304
0.03	0.015	0.18	0.088	0.33	0.162	0.48	0.235	0.63	0.309
0.04	0.020	0.19	0.093	0.34	0.167	0.49	0.240	0.64	0.314
0.05	0.025	0.20	0.098	0.35	0.172	0.50	0.245	0.65	0.319
0.06	0.030	0.21	0.103	0.36	0.176	0.51	0.250	0.66	0.323
0.07	0.035	0.22	0.108	0.37	0.181	0.52	0.254	0.67	0.328
0.08	0.040	0.23	0.113	0.38	0.186	0.53	0.260	0.68	0.333
0.09	0.045	0.24	0.118	0.39	0.191	0.54	0.265	0.69	0.338
0.10	0.049	0.25	0.123	0.40	0.196	0.55	0.270	0.70	0.343
0.11	0.054	0.26	0.127	0.41	0.201	0.56	0.275	0.71	0.348
0.12	0.060	0.27	0.132	0.42	0.206	0.57	0.279	0.72	0.353
0.13	0.064	0.28	0.137	0.43	0.211	0.58	0.284	0.73	0.358
0.14	0.069	0.29	0.142	0.44	0.216	0.59	0.289	0.74	0.363
0.15	0.073	0.30	0.147	0.45	0.221	0.60	0.294	0.75	0.368

Rise in pressure: add to gage reading.
Fall in pressure: subtract from gage reading.

Materials Required

Quantity	Description	Reference Number
As Required	Detergent, General Purpose	MIL-D-16791 NIIN 00-282-9699
As Required	Cloth, Lint-Free, Type II	MIL-C-85043 NIIN 00-044-9281
As Required	Talc, Technical	MIL-T-50036A NIIN 01-080-9589

CAUTION

Solvents are not to be used in cleaning life preservers.

1. Prepare solution of detergent (MIL-D-16791) consisting of 1/4 to 1/2 ounce of detergent per gallon of water.

2. Apply cleaning solution to soiled area with a spray or sponge.

3. Allow solution to remain on surface for several minutes, then agitate with a soft brush or rag.

4. Rinse surface thoroughly with water; wipe with a cloth or sponge. Repeat this application until surface is free from all solution.

5. Dry casing before use and dry bladder with a lint-free cloth (MIL-C-85043). Apply a light coating of talc (MIL-T-50036A).

14-51. INSTALLATION OF INFLATION VALVE PROTECTIVE COVERS. To install inflation valve protective covers, proceed as follows:

1. Open life preserver flotation assembly, then position on a flat surface.

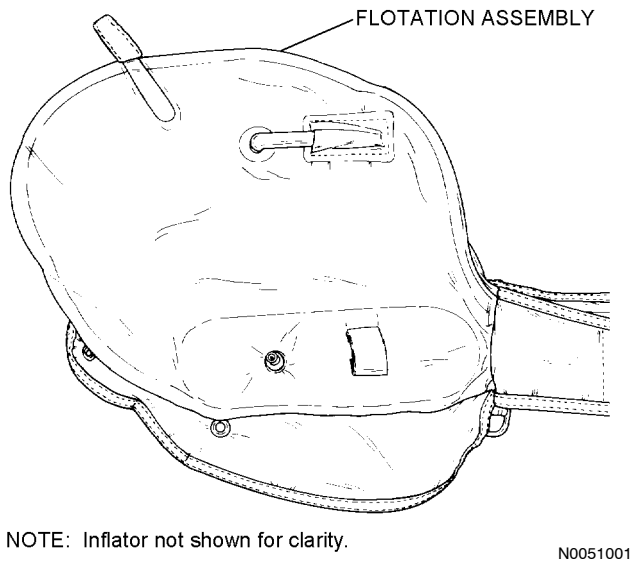

Step 1 - Para 14-51

2. Place inflation valve protective cover upon the life preserver. Ensure that inlet manifold stem hole and CO_2 cylinder holding loop hole are aligned according to figure 14-4.

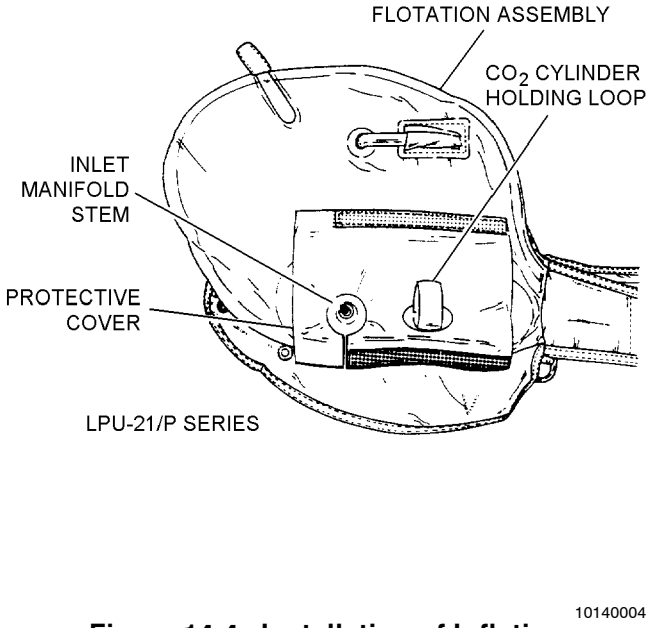

Figure 14-4. Installation of Inflation Valve Protective Cover

14-52. INSTALLATION OF CO_2 CYLINDERS. To install CO_2 cylinders, proceed as follows:

Support Equipment Required

Quantity	Description	Reference Number
1	Scale (Gram)	A-A-52021-1 NIIN 00-514-4117 or equivalent
1	Die, Cylinder Thread Chaser	1842-008-01 (CAGE 03688) NIIN 00-069-4040

Materials Required

Quantity	Description	Reference Number
1	Valve Stem and Seat Seal Kit (Note 1)	105AS100-5 (CAGE 30003) NIIN 00-498-6964
As Required	Cylinder, CO_2 Type III, 35-Gram	MIL-C-25369C

Notes: 1. Seat Seal is obtained from Valve Stem and Seat Seal Kit, P/N 105AS100-5, NIIN 00-498-6964, which contains two top, two bottom, and two seat seal gaskets.

NOTE

Weight of charged cylinder will vary according to manufacturer.

1. Weigh a charged cylinder and compare the minimum stamped weight with the scale weight. Discard and replace cylinder if scale weight is 2 grams less than minimum stamped weight.

2. The proper configuration of each life preserver assembly consists of an inflator (MIL-I-23145, Type II), and a CO_2 cylinder (MIL-C-25369, Type III, 34 to 37 grams).

3. Remove and discard inflator setscrew(s) if installed. Ensure that inflator lever is in a cocked position.

4. To assure a firm cylinder seat, conduct a cylinder thread count. Threaded portion of cylinder neck shall contain a minimum of seven full threads to assure a firm cylinder seat within valve body. Any cylinder found with less than seven full threads shall be discarded. See figure 14-5.

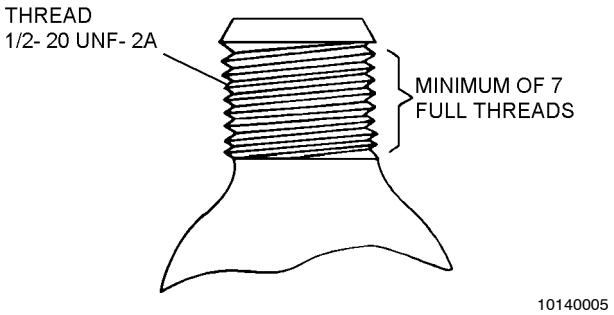

Figure 14-5. Cylinder Thread Count

CAUTION

Steel threads on CO_2 cylinder can cause damage to aluminum threads on inflator if cylinder is not carefully threaded. If binding occurs during installation of cylinder, use thread chaser dye on cylinder thread to cut free excessive plating. Reinstall cylinder. If binding still occurs, replace cylinder.

5. After performing functional test, insert a new seat seal gasket. At intermediate inspection intervals, inspect condition of gasket and replace if necessary.

6. Install CO_2 cylinder into inflator body as far as hand twisting will permit.

NOTE

When replacing CO_2 cylinder to inflator, ensure that CO_2 cylinder passes through the holding patch loop.

Do not install setscrews in LPU-21/P series life preservers.

7. Close inflation valve protective covers; then secure with hook and pile tape provided. See figure 14-4.

14-53. REPAIR/REPLACEMENT.

14-54. This section contains instructions for the repair or modification of various components or subassemblies of life preservers to ensure that appropriate items of equipment remain in Ready For Issue (RFI) status. Reference numbers for parts which are defective, corroded or worn and require replacement are included in the applicable paragraph of this section. Other replacement parts, such as carrying cases and personal survival equipment, are also listed.

14-55. Replacement of easily removed assembly components such as CO_2 inflation valves, survival items, are authorized in addition to repair and replacement procedures documented in this section. The life preserver shall be subjected to a functional and leakage test each time CO_2 inflation valves are removed and replaced for any reason, and each time inflation valve gaskets are replaced.

14-56. DETERMINATION OF REPAIRABILITY. Patching of holes, cuts, tears or punctures 1-inch square or less are the only repairs authorized in a life preserver bladder. Life preserver shall be considered beyond repair for any of the following reasons:

1. Porous fabric areas on flotation bladder.

2. Split or open bladder seams with the exception of non-leaking bladder fin seams.

3. Leakage test failure resulting from other than repairable cut, tear or puncture.

4. Holes, cuts, tears or punctures within 1-inch of flotation bladder seams.

5. Deterioration of the rubberized fabric caused by oil, grease, or any other foreign substance.

6. Deterioration of the rubberized fabric caused by a heavy mildewed condition.

14-57. CASING REPAIR PROCEDURES. To repair casings, proceed as follows:

Materials Required

Quantity	Description	Reference Number
As Required	Thread, Nylon, High Temperature Resistant, Sage Green	MIL-T-83193 NIIN 00-405-2252
	-or-	
As Required	Thread, Nylon, Type II, Size E, Sage Green	V-T-295 NIIN 00-204-3884
As Required	Cloth, Aramid, Non-melting, Type 456, Class I, Sage Green	MIL-C-83429 NIIN 01-147-2064
As Required	Tape, Hook, Sage Green, Type II	MIL-F-21840 NIIN 00-405-2266
As Required	Tape, Pile, Sage Green, Type II	MIL-F-21840 NIIN 00-405-2263

1. Minor holes, rips, tears, or abrasions in casing assembly may be repaired if they do not exceed 2 inches.

2. Repair or replace loose or damaged hook and pile tape as required.

3. Remove bladder in areas being repaired.

4. For all repairs plus loose or broken stitching use 6 to 8 stitches per inch and back stitch one half inch.

5. Casing assembly worn beyond economical repair shall be discarded.

14-58. CASING GROMMET REPLACEMENT PROCEDURES. To replace casing grommet, proceed as follows:

Support Equipment Required

Quantity	Description	Reference Number
1	Punch, Cutting, 3/16″	3GGG-P-833 NIIN 00-180-0941
1	Pencil, Solder	W-S-570 NIIN 00-204-3855

Materials Required

Quantity	Description	Reference Number
1″	Tape, Nylon, Sage Green, 1″ Wide	MIL-T-5038 NIIN 00-753-6144
	-or-	
1 1/2″ X 1 1/2″	Cloth, Aramid, Sage Green, Type 456, Class I	MIL-C-83429 NIIN 01-147-2064
2	Grommet, Brass, Size 00	MS20230B20 NIIN 00-291-0302

1. Remove bladder in areas being repaired.

2. Remove loose grommet.

3. Reinforce worn grommet hole in casing by using either nylon tape or aramid cloth.

a. Prepare reinforcing material.

(1) Cut and sear edges of a 1″ piece of nylon tape

or

(2) Cut a 1 1/2″ X 1 1/2″ piece of aramid cloth and fold under 1/4″ on all edges.

b. Sew reinforcing material to outside of casing, centered where possible over original grommet location. Use a cross boxstitch with 6 to 8 stitches per inch, 1/8 inch from edge.

4. Install new grommet.

a. Locate original grommet hole. Cut hole in reinforcing material using 3/16″ cutting punch.

b. (For nylon tape only.) Carefully sear hole to prevent fraying using solder pencil.

c. Install grommet using 00 grommet setter and base.

14-59. CEMENTING LIFE PRESERVERS. Cementing of life preservers shall be performed as follows:

Support Equipment Required

Quantity	Description	Reference Number
1	Roller, Wooden	GGG-R-00620 NIIN 00-243-9401

NOTE

Toluene shall be the primary solvent used in the fabrication or repair of this assembly. MEK may be used if toluene is not available. Always use solvents sparingly and wipe up excess solvents; do not allow to dry by evaporation.

Materials Required

Quantity	Description	Reference Number
1	Brush, Disposable	NIIN 00-514-2417
As Required	Toluene	TT-T-548 NIIN 00-281-2002
	-or-	
As Required	Methyl Ethyl Ketone (MEK)	TT-M-261 NIIN 00-281-2762
As Required	Cement, Class 3, Polychloroprene	MIL-A-5540 NIIN 00-142-9913
As Required	Talc, Technical	MIL-T-50036A NIIN 01-089-9589

WARNING

Do not use toluene or MEK near open flame, heat or electrical sparks. Avoid prolonged contact with skin or breathing of fumes. Use only in a well ventilated area.

CAUTION

Use only Polychloroprene adhesives and Polychloroprene-coated cloth patches on Polychloroprene-coated LPU-21/P flotation assemblies.

NOTE

Toluene or MEK must be applied vigorously to life preserver material over three years old in order to reactivate the material prior to cementing. Pigment from the material coloring staining a cloth rubbed over the treated surface will indicate the material has been reactivated. Cement shall be applied immediately after the surface has dried.

1. Clean both surfaces to be cemented with four applications of toluene or MEK. Apply toluene or MEK with back-and-forth strokes on the first and third applications, and one-way strokes on the second and fourth applications. Allow area to dry between applications.

CAUTION

The effective active period of adhesive mixtures composed of polychloroprene and an accelerator is eight (8) hours. Do not use mixture if older than eight hours.

2. Prepare only enough mixture for 8 hours. Dispose of any remaining mixture.

3. Using a disposable brush, apply cement to completely cover surfaces to be cemented. Use long, one direction strokes and complete each surface before cement becomes tacky as the brush may pull tacky cement from the surface. Allow to dry for 10 minutes.

4. Apply a second coat of cement as in step 3. Use brush strokes perpendicular to the original direction.

5. When second coat of cement has become tacky, place pieces together. If cemented area has a cut or tear, butt edges of damage before applying patch. Roll out bubbles with a wooden roller.

6. Allow cement to cure a minimum of 48 hours.

7. Dust area with talc (MIL-T-50036A).

14-60. PATCHING LIFE PRESERVERS. Patching of life preservers shall be performed as follows:

NOTE

Life Preserver is not repairable if it has holes, cuts, tears, or punctures over one-inch square.

Materials Required

Quantity	Description	Reference Number
As Required	Cloth, Nylon, Polychloroprene-coated, Type I, Sage Green	MIL-C-19002 NIIN 00-935-1759

CAUTION

Use only Polychloroprene adhesives and Polychloroprene-coated cloth patches on Polychloroprene-coated LPU-21/P flotation assemblies.

NOTE

Select patch color as near as possible to color of life preserver being repaired.

1. Cut a rounded patch 1 inch larger than damage on all sides.

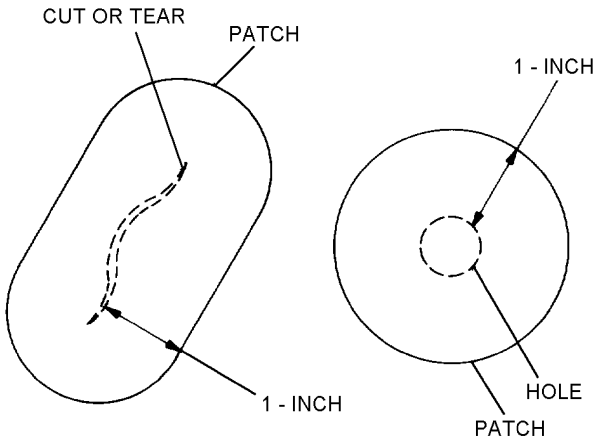

N0060001

Step 1 - Para 14-60

2. Center patch over damage and trace an outline of patch on fabric.

3. Cement patch to damaged area in accordance with paragraph 14-59.

4. Dust area with talc (MIL-T-50036A).

5. Perform a leakage test.

14-61. INSPECTION RECORD PATCH.

NOTE

The 28th In-Service Management Panel meeting for Aviation Life Support systems rescinded the requirement for the packer to sign the Inspection Record patch on life preservers. The requirement for all other documentation remains unchanged. The reason for this change is that most history patches are unreadable and the packer's and inspector's names are documented on Aviation Crew Systems Records.

14-62. REPLACEMENT OF ORAL INFLATION VALVE. To replace the oral inflation valve, proceed as follows:

Materials Required

Quantity	Description	Reference Number
1	Valve, Oral Inflation	—
As Required	Cement, Polychloroprene	MIL-A-5540 NIIN 00-142-9913
As Required	Brush, Disposable	NIIN 00-514-2417
As Required	Toluene	TT-T-548 NIIN 00-281-2002
	-or-	
As Required	Methyl Ethyl Ketone (MEK)	TT-M-261 NIIN 00-281-2762

CAUTION

Only toluene or MEK shall be used to clean oral inflation valve and tube. Only Polychloroprene cement (MIL-A-5540, NIIN 00-142-9913) shall be used to cement oral inflation valve into oral inflation tube.

1. Carefully cut through metal clamp securing oral inflation valve to oral inflation tube and remove metal band and oral inflation valve.

2. If the tip of the oral inflation tube was damaged during removal of valve, trim off damaged section.

3. Clean both surfaces to be cemented with toluene or MEK. Allow areas to dry.

4. Using a small disposable brush, carefully apply a small amount of Polychloroprene cement to the surfaces of the tube and the valve which are to be cemented together.

5. Immediately place oral inflation valve into oral inflation tube. Oral inflation valve should be inserted up to valve shoulder. Inspect for proper application/cement.

6. Tightly wrap the cemented portion of the oral inflation tube with cord or wire and allow to cure for 48 hours before removing wrap.

7. Perform leakage test in accordance with paragraph 14-44.

14-63. RECEMENTING OF BLADDER FIN SEAMS. This repair shall be performed only if a flotation bladder does not leak, that is, if only outer seam around bladder is split or separating. To recement an open fin seam proceed as follows:

1. If fin seam is not leaking, recement open material surrounding flotation bladder in accordance with paragraph 14-59.

Figure 14-6 Deleted.

2. Perform a leakage test in accordance with paragraph 14-44.

NOTE

If bladder exhibits leakage from seam, bladder cell has ruptured. Dispose of life preserver after usable parts have been salvaged.

14-64. FABRICATION OF SLIP-ON POCKETS FOR LIFE PRESERVER HARDWARE. To fabricate slip-on pockets for life preserver hardware, proceed as follows:

Materials Required

Quantity	Description	Reference Number
As Required	Cloth, Nylon, Polychloroprene-Coated, Type I	MIL-C-19002 NIIN 00-935-1759
As Required	Thread, Nylon Size E	V-T-295 NIIN 00-204-3884

1. Cut two pieces of polychloroprene-coated nylon cloth as shown.

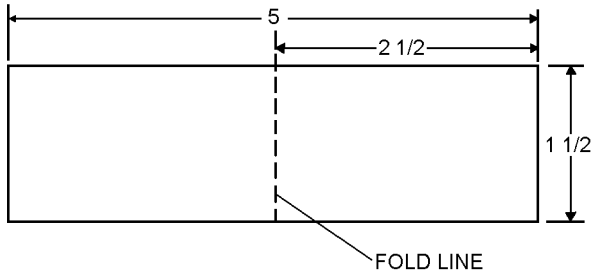

N0064001

Step 1 - Para 14-64

2. Fold piece of cloth in half along fold line.

3. Sew two sides adjacent to fold forming a pocket. Use stitch type 301 stitching 8 to 10 stitches per inch.

4. Repeat steps 2 and 3 for other piece of cloth.

5. When packing life preserver, slip pockets over applicable pieces of hardware.

14-65. REPLACEMENT OF FLARE AND DYE MARKER POUCH SNAPHOOKS. To replace a broken snaphook, proceed as follows:

Materials Required

Quantity	Description	Reference Number
12 inches	Cord, Nylon, Type I	MIL-C-5040 NIIN 00-014-6699

1. Cut through metal ring portion of snaphook.

2. Remove snaphook and discard.

3. Pass end of cord through webbing loops on pouch and preserver ring.

4. Secure cord ends with binder knot, cut excess cord, and sear ends.

14-66. REPLACEMENT OF COLLAR LOBE SNAPHOOKS. To replace the collar lobe snaphook or webbing which is attached to the snaphook, proceed as follows:

Materials Required

Quantity	Description	Reference Number
As Required	Cloth, Nylon, Polychloroprene-coated, Type I, Sage Green	MIL-C-19002 NIIN 00-935-1759
As Required	Webbing, Textile, Woven Nylon, Type Ia, 3/4-inch	MIL-W-4088H NIIN 00-782-3224
2	Snaphook, CWBC1	MIL-S-43770/1 NIIN 01-187-9402

Materials Required (Cont)

Quantity	Description	Reference Number
As Required	Thread, Nylon, Size E, Type I or II	V-T-295 NIIN 00-204-3884
As Required	Toluene	TT-T-548 NIIN 00-281-2002
	-or-	
	Methyl Ethyl Ketone (MEK)	TT-M-261 NIIN 00-281-2762
As Required	Talc, Technical	MIL-T-50036A NIIN 01-080-9589

NOTE

Procedural step 1 is for replacement of worn webbing and broken snaphook. Step 2 is for replacement of the snaphook patch assembly.

1. To replace worn webbing and broken snaphook, proceed as follows:

a. Cut original attachment webbing at point where it passes through eye of snaphook and sear ends.

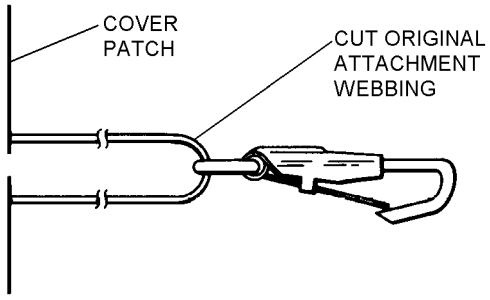

N006601A

Step 1a - Para 14-66

b. Replace original snaphook with copper alloy wire snaphook.

c. Cut one 2-inch length and one 1 1/2-inch length of nylon webbing and sear ends.

d. Pass the 1 1/2-inch length of webbing through snaphook eye and stitch one row of stitching, 10 to 12 stitches per inch, close to seared ends, securing chafing webbing to snaphook eye.

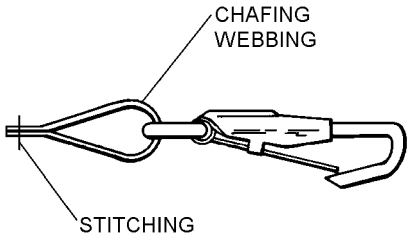

N006601D

Step 1d - Para 14-66

e. Pass the 2-inch length of webbing (replacement webbing) through snaphook eye and over chafing webbing.

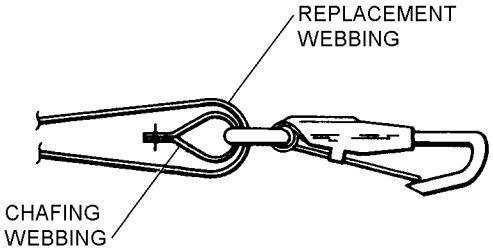

N006601E

Step 1e - Para 14-66

f. Sandwich each side of original webbing between chafing webbing and replacement webbing. Stitch across webbing and backstitch forming three rows of stitching. The finished length of new webbing attachment shall be approximately 1 inch.

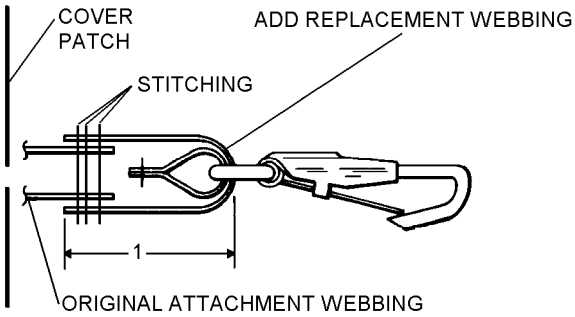

N006601F

Step 1f - Para 14-66

g. Repeat steps a through f for opposite side.

2. To replace the snaphook patch assembly, proceed as follows:

WARNING

Do not use toluene or MEK near open flame, heat, or electrical sparks. Avoid prolonged contact with skin or breathing of fumes. Use only in well-ventilated area.

NOTE

Toluene shall be the primary solvent used in the fabrication or repair of this assembly. MEK may be used if toluene is not available. Always use solvents sparingly and wipe up excess solvents; do not allow to dry by evaporation.

a. Apply toluene or MEK to loosen patches. Remove patches from life preserver flotation bladder.

CAUTION

Use only Polychloroprene adhesives and Polychloroprene-coated cloth patches on Polychloroprene-coated LPU-21/P flotation assemblies.

b. Fabricate cover patch from coated cloth.

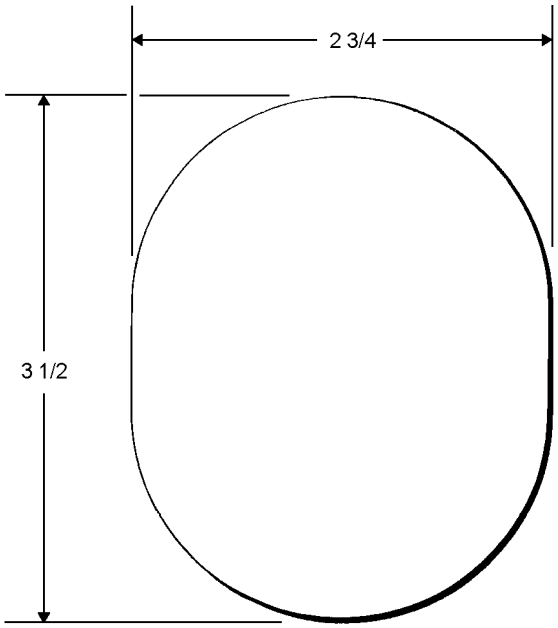

N006602B

Step 2b - Para 14-66

c. Fabricate base patch from coated cloth.

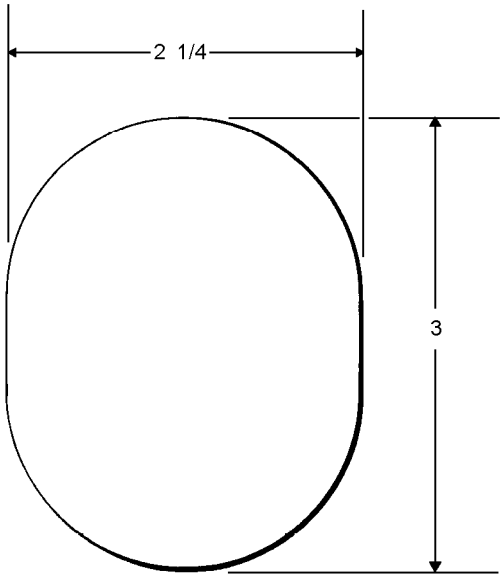

N006602C

Step 2c - Para 14-66

d. Cut a 1/16 x 3/16-inch slot in cover patch.

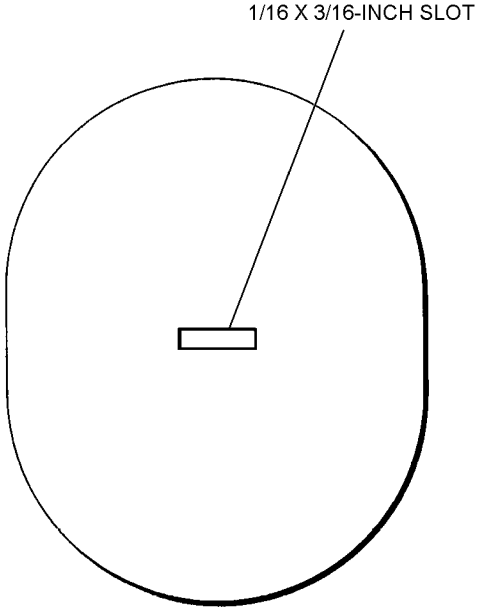

N006602D

Step 2d - Para 14-66

e. Cut one 2 1/2-inch length and one 1 1/2-inch length of nylon webbing and sear ends.

f. Pass the 1 1/2-inch length of webbing through snaphook eye and stitch one row of stitching, 10 to 12 stitches per inch, close to seared ends, securing chafing webbing to snaphook eye.

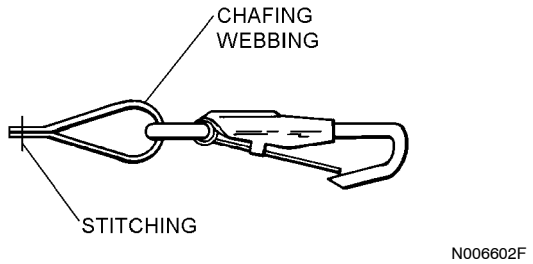

Step 2f - Para 14-66

g. Pass 2 1/2-inch length of webbing through snaphook eye and over chafing webbing.

h. Sew a single row of stitching across webbing approximately 5/8 inch from end of webbing.

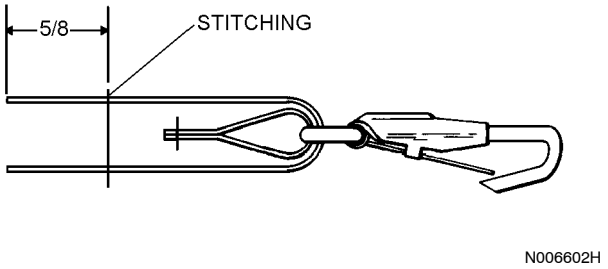

Step 2h - Para 14-66

j. Insert webbing through slot opening in cover patch and sew a 7/16 x 5/8-inch boxstitch on each end of webbing to base patch.

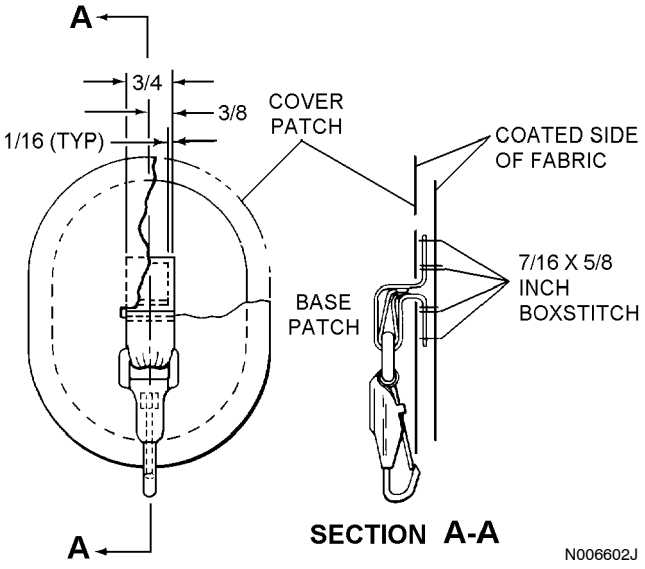

Step 2j - Para 14-66

k. Cement cover patch to base patch in accordance with paragraph 14-59.

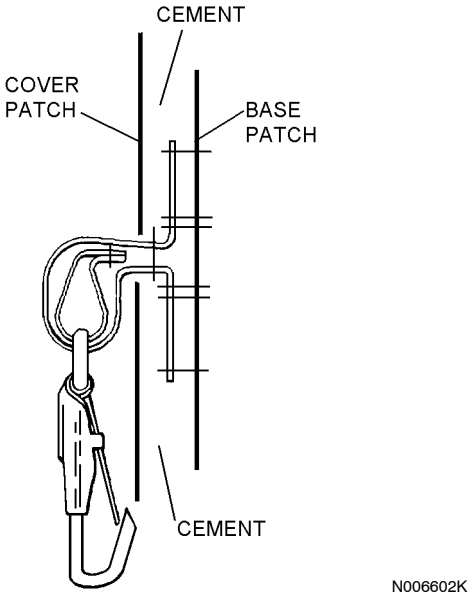

Step 2k - Para 14-66

l. Cement base patch to collar lobe on life preserver in accordance with paragraph 14-59.

m. Dust area with talc.

n. Repeat steps a through m for opposite side.

14-67. FLARE POUCH REPAIR. To repair flare pouch which will not close or is extremely difficult to close with flares installed, proceed as follows:

Materials Required

Quantity	Description	Reference Number
As Required	Thread, Nylon, Size E	V-T-295 NIIN 00-204-3884
2	Socket, Snap Fastener	MS27983-2 NIIN 00-945-2577
2	Cap, Snap Fastener	MS27983-1 NIIN 00-891-9073
3 1/2 inches	Webbing, Type VIII	MIL-W-4008

1. Remove both sets of sockets, caps, and pull tabs from pouch closure flap. Save pull tabs.

2. Position MIL-W-4008 Type VIII webbing on outside surface of pouch flap. Cut and sear webbing ends to match contour of flap end. Boxstitch webbing to flap using size E nylon thread (V-T-295). See figure 14-7.

3. Reposition both sets of sockets, caps, and pull tabs 3/8 inch closer to flap end. Use original pull tabs.

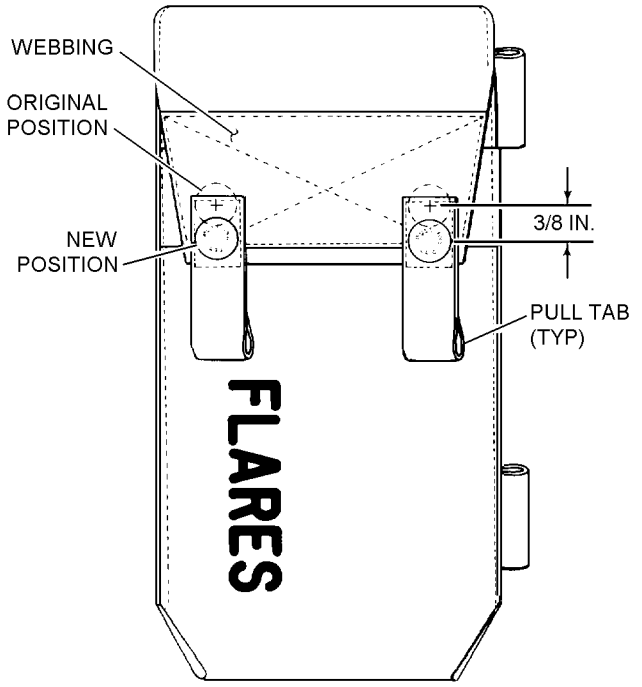

10140007

Figure 14-7. Flare Pouch Repair

14-68. DISASSEMBLY OF THE LIFE PRESERVER. To disassemble the life preserver for bladder or case repairs, proceed as follows:

Support Equipment Required

Quantity	Description	Reference Number
1	Nipper, End Cutting	—

NOTE

Life preserver shall be disassembled only to the extent necessary to perform required maintenance or inspection.

1. Remove six rivets securing each waist lobe to casing with a pair of nippers.

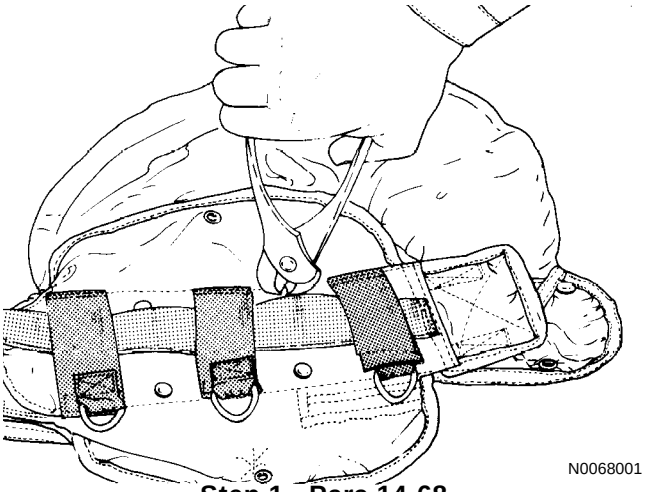

N0068001

Step 1 - Para 14-68

2. Open casing and remove both inflation assemblies.

3. Reattach cap nuts to valve stems.

4. Release all hook and pile tape fasteners.

5. Fold collar lobe and waist lobes to width of casing.

6. Hold casing at collar and pull flotation assembly down and out of casing, one lobe at a time.

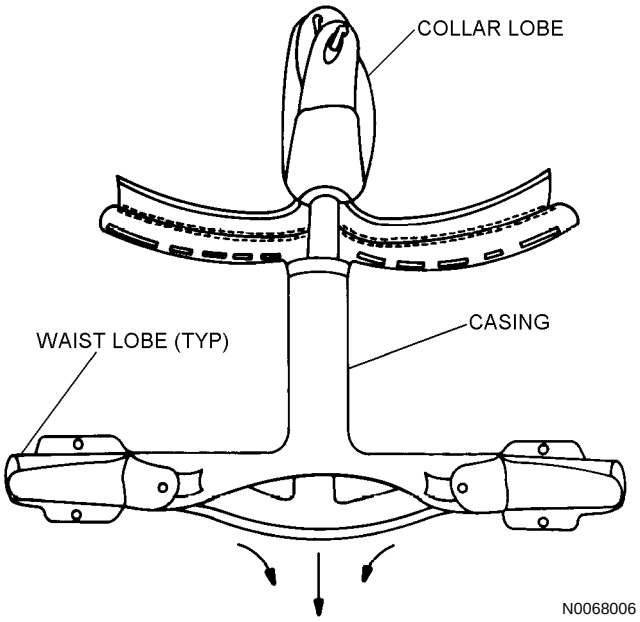

N0068006

Step 6 - Para 14-68

14-69. REASSEMBLY OF THE LIFE PRESERVER. To reassemble the life preserver proceed as follows:

Materials Required

Quantity	Description	Reference Number
12	Post, Rivet	MS27986-3B NIIN 00-281-4359
12	Cap, Rivet	MS27986-4B NIIN 00-281-2553
1	Valve Stem and Seat Seal Kit (Note 1)	105AS100-5 (CAGE 30003) NIIN 00-498-6964
3 feet	Cord, Nylon, Type III	MIL-C-5040 NIIN 00-240-2146

Notes: 1. Valve Stem and Seat Seal Kit, P/N 105AS100-5, NIIN 00-498-6964, contains two top, two bottom, and two seat seal gaskets.

NOTE

The quantity of materials listed is sufficient for reassembly of one life preserver.

Support Equipment Required

Quantity	Description	Reference Number
1	Press	M114 (CAGE 83058)

1. Attach one end of a 3-foot length of Type III nylon cord to snaphook on collar lobe.

CAUTION

Ensure flotation assembly is not twisted in casing channels.

2. Insert free end of nylon cord through back channel of casing and pull collar lobe into casing. Remove nylon cord from collar snaphook. Insert waist lobes through casing waist channels.

3. When flotation assembly is in casing assembly, ensure that it is in proper configuration and is not twisted inside casing.

4. Align rivet holes in flotation assembly attachment patches (on waist lobes) over rivet holes in casing. Insert rivets through holes and seat.

NOTE

The rivet cap shall be on the inside of the casing.

5. Remove old inflation stem gaskets and replace with new gaskets. Reinstall inflation assemblies and protective covers. Pack life preserver in accordance with paragraph 14-78.

14-70. REPLACEMENT OF BEADED INFLATION HANDLE ASSEMBLY. To replace the beaded inflation handle, proceed as follows:

Materials Required

Quantity	Description	Reference Number
As Required	Handle, Beaded Inflation	975AS121-11 NIIN 01-120-4752 (CAGE 30003)
As Required	Thread, Nylon, Size E	V-T-295 NIIN 00-204-3884

1. Open snap fastener on locking pin cover; then cut and remove safety tie securing eye of locking pin to retaining loop. Carefully remove locking pin from pin keeper and retaining loop.

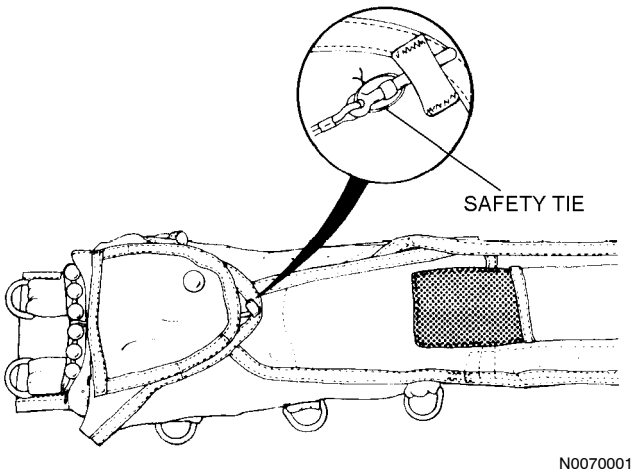

Step 1 - Para 14-70

2. Open flaps and unfold life preserver assembly.

3. Remove CO_2 cylinder from CO_2 inflator assembly. Retain CO_2 cylinder for reinstallation.

4. Remove inflation lanyard from inflator assembly; then unsnap beaded inflation handle from life preserver casing.

5. Secure new beaded handle inflation lanyard to actuating lever by passing lanyard through grommet in bottom casing flap and through hole in end of actuating lever. Pass lanyard back through grommet in bottom casing flap and form lark's head knot.

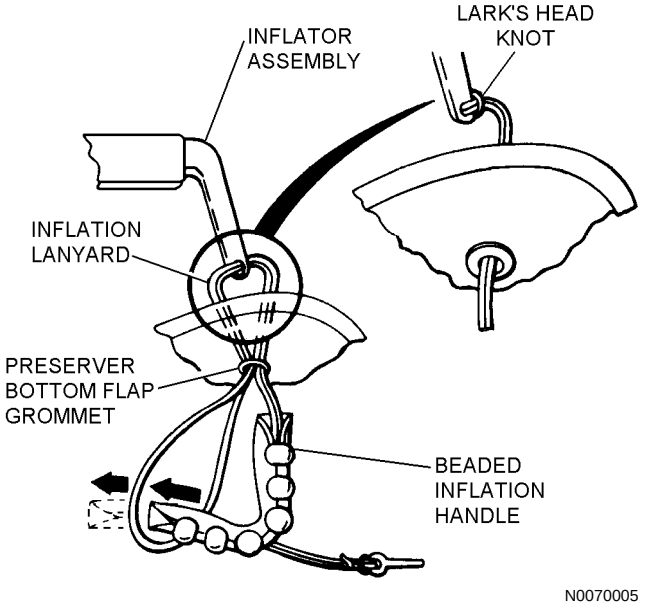

Step 5 - Para 14-70

6. Fasten beaded inflation handle to casing with snap fasteners provided; then safety-tie beaded inflation handle with one turn of size E nylon thread, single. Draw thread sufficiently to permit 1/2-inch ±1/8-inch space between the middle beads and webbing on the preserver. Tie ends of both safety ties with a surgeon's knot followed by a square knot.

NOTE

Ensure that overhand knot on locking pin lanyard is within 3/4 inch from eye of pin.

7. Route locking pin under outboard flap cover panel and through No. 3 spur grommet.

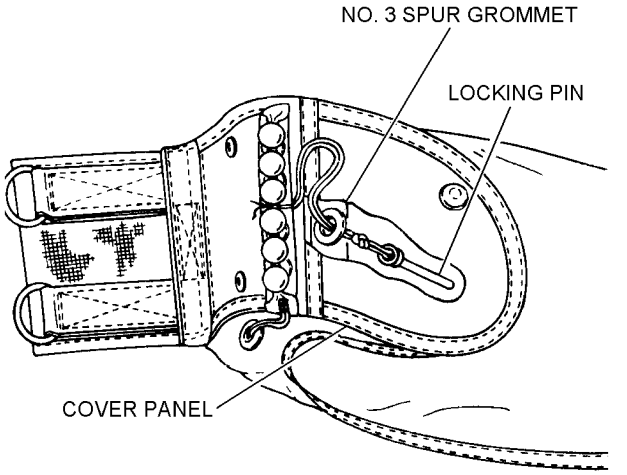

Step 7 - Para 14-70

NOTE

On some late issue LPU-21 series life preservers, the No. 3 spur grommet has been deleted.

8. Route the locking pin under the locking pin cover flap through the opening in the stitching at the base of the flap, through the retaining loop/packaging cord loop, and under the pin keeper loop.

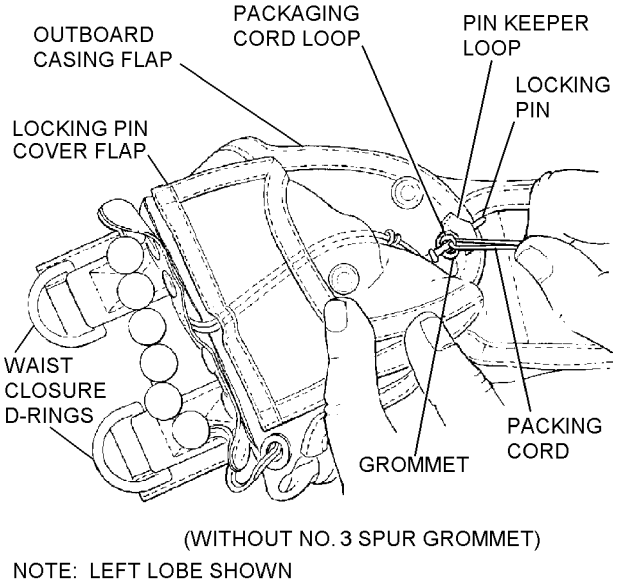

Step 8 - Para 14-70

9. Perform Beaded Inflation Handle Pull Test. Refer to paragraph 14-43.

10. Recock CO_2 inflator and install CO_2 cylinder.

NOTE

Ensure that all hook and pile tapes are securely mated.

11. Pack life preserver in accordance with the applicable paragraph.

12. Make necessary entries on appropriate form in accordance with OPNAVINST 4790.2 Series.

14-71. REPAIR OF CORRODED CO_2 INFLATION VALVE MIL-I-23145. To repair CO_2 inflation valve, proceed as follows:

Materials Required

Quantity	Description	Reference Number
As Required	Lubricant, Silicone	DC7 (CAGE 71984) NIIN 00-975-0712
1	Valve Stem and Seat Seal Kit (Note 1)	105AS100-5 (CAGE 30003) NIIN 00-498-6964
As Required	Cloth, Emery, No. 240	—
1	Valve, Inflation, Type II	MIL-I-23145 NIIN 00-012-3571
As Required	Abrasive Mat	MIL-A-9962 NIIN 00-967-5093
As Required	Corrosion Preventative Compound (Amiguard) Type I	MIL-C-85054 NIIN 01-041-1596

Notes: 1. Valve Stem and Seat Seal Kit, P/N 105AS100-5, NIIN 00-498-6964, contains two top, two bottom, and two seat seal gaskets.

1. Remove CO_2 cylinder from valve. Discard seat seal gasket.

2. Remove inflation valve from preserver. Discard two gaskets on valve stem.

3. Remove grooved taper pin (retaining lever) from inflation valve, using awl and mallet. See figure 14-8.

4. Remove lever, spring, and piercing pin. If spring is broken or corroded, replace entire valve.

5. If piercing pin or actuating lever is corroded, remove corrosion with abrasive mat. If abrasive mat is ineffective, use 240 grit emery cloth. Do not damage O-ring on piercing pin. Wipe off any dirt or moisture from actuating lever and apply a thin coat of MIL-C-85054 and allow to dry.

6. Clean residue from actuating lever on piercing pin. Lightly coat base of piercing pin with silicone lubricant.

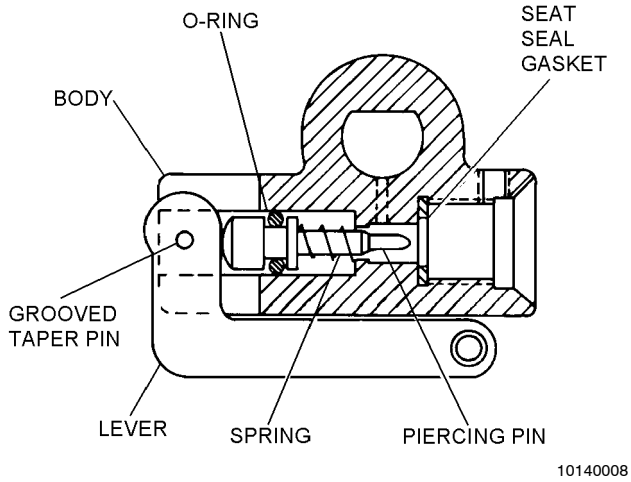

Figure 14-8. CO_2 Inflation Assembly

7. Reassemble inflation valve and operate actuating lever three or four times. Ensure that lever and piercing pin move freely.

8. If piercing pin and lever do not move freely, obtain replacement valve.

9. Reinstall inflation valve on life preserver using new gaskets.

CAUTION

Valve stem may rotate if cap nut is over torqued.

10. Install cap nut onto valve stem and torque to a value of 8 ±1 in-lb.

11. Reinstall CO_2 cylinder using new seat seal gasket.

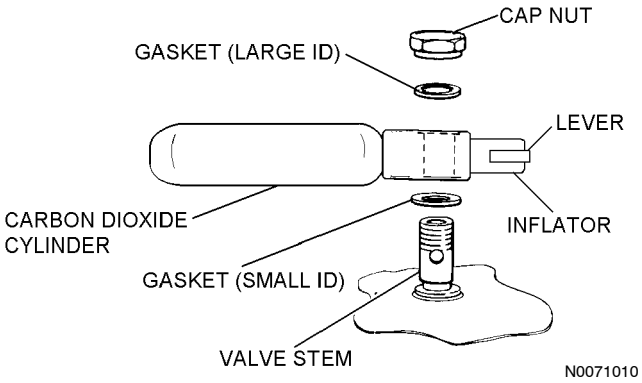

Step 11 - Para 14-71

14-72. REPLACEMENT OF TOP AND BOTTOM GASKETS. To replace the top and bottom gaskets on the inflators, proceed as follows:

Support Equipment Required

Quantity	Description	Reference Number
1	Wrench, 9/16-inch	—

Materials Required

Quantity	Description	Reference Number
1	Valve Stem and Seat Seal Kit (Note 1)	105AS100-5 (CAGE 30003) NIIN 00-498-6964

Notes: 1. Top and bottom gaskets are obtained from Valve Stem and Seat Seal Kit, P/N 105AS100-5, NIIN 00-498-6964, which contains two top, two bottom, and two seat seal gaskets.

1. Remove cap nut and top gasket from inflator.

WARNING

Ensure that gaskets are properly positioned. The top gasket has a larger internal diameter than the bottom gasket.

2. Remove inflator and replace bottom gasket.

3. Carefully place inflator onto valve stem.

4. Install top gasket onto valve stem.

CAUTION

Valve stem may rotate if cap nut is over torqued.

5. Tighten cap nut onto valve stem and torque to a value of 8 ±1 in-lb.

6. Perform functional and leakage tests on life preserver cell that was repaired. Refer to paragraphs 14-34 and 14-44.

14-73. REPLACEMENT OF CHECK VALVE ASSEMBLY. To replace a defective check valve assembly, proceed as follows:

Materials Required

Quantity	Description	Reference Number
1	Valve, Pneumatic Inflator (Check Valve Assembly) (Note 1)	Schrader-Bridgeport P/N 8457500047

Notes: 1. Schrader-Bridgeport P/N 8457500047 must be open purchased from:
Schrader-Bridgeport Intl
205 Frazier Rd
P.O. Box 668
Altivista, VA 24517
Phone (804) 369-8875

Support Equipment Required

Quantity	Description	Reference Number
1	Tool, Valve Core	8769A or equivalent (CAGE 27783) NIIN 01-354-5423
1	Wrench, Torque	—

1. If not available, fabricate a valve core tool as shown in Chapter 3.

2. Remove inflator cap nut.

3. Insert valve core tool and unscrew check valve from valve stem.

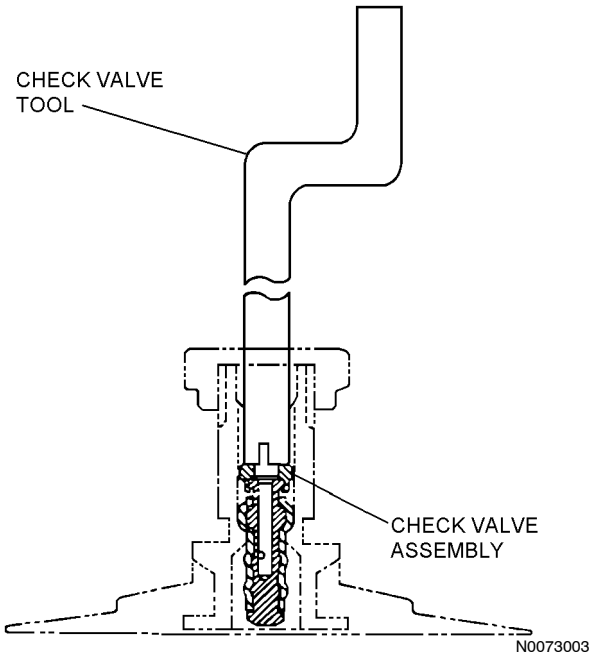

Step 3 - Para 14-73

4. Insert new check valve in valve stem and tighten with valve core tool hand tight.

CAUTION

Valve stem may rotate if cap nut is over torqued.

5. Replace cap nut and torque to a value of 8 ±1 in-lb.

6. Perform a functional and leakage test on life preserver cell that was repaired. Refer to paragraphs 14-34 and 14-44.

14-74. FABRICATION OF PROTECTIVE COVER ASSEMBLY. To fabricate a protective cover, proceed as follows:

Materials Required

Quantity	Description	Reference Number
17 x 6 inches	Cloth, Nylon, Polychloroprene-coated, Type I, Sage Green	MIL-C-19002 NIIN 00-935-1759

Materials Required (Cont)

Quantity	Description	Reference Number
12 x 5/8 inches	Fastener, Tape, Hook, Type II	MIL-F-21840
12 x 5/8 inches	Fastener, Tape, Pile, Type II	MIL-F-21840
As Required	Thread, Nylon, Type I or II, Size E, Sage Green	V-T-295 NIIN 00-204-3884

NOTE

Procedural step 1 is for a right protective cover and step 2 is for a left protective cover.

1. To fabricate a right protective cover, proceed as follows:

a. Cut an 8 1/2-inch length of cloth.

b. Cut a 6-inch length of hook and pile tape and sew to the coated side of the cloth. Use stitch type 301 stitching 8 to 10 stitches per inch.

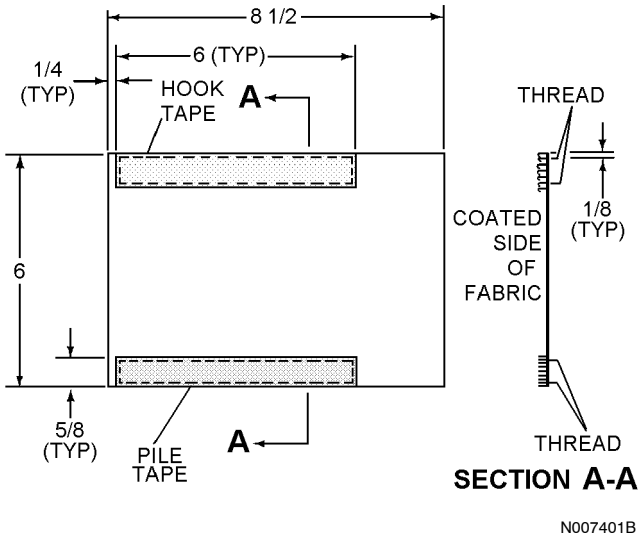

Step 1b - Para 14-74

c. Position cloth, coated side up, over cutting board and punch a 1 7/16-inch diameter hole and a 1-inch diameter hole.

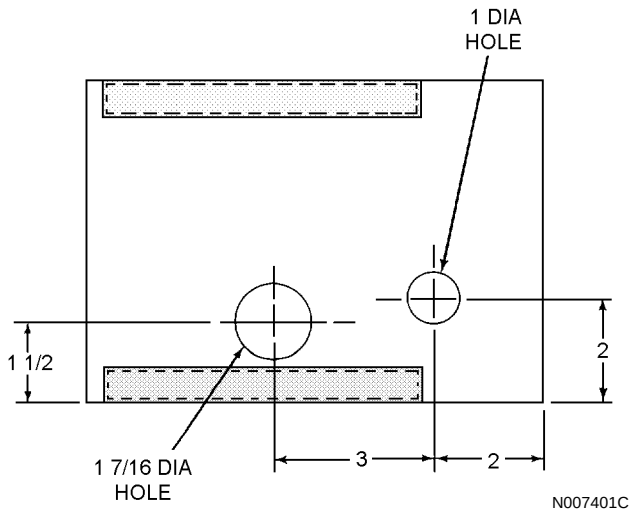

Step 1c - Para 14-74

d. Cut slit into cloth up to the 1-inch diameter hole.

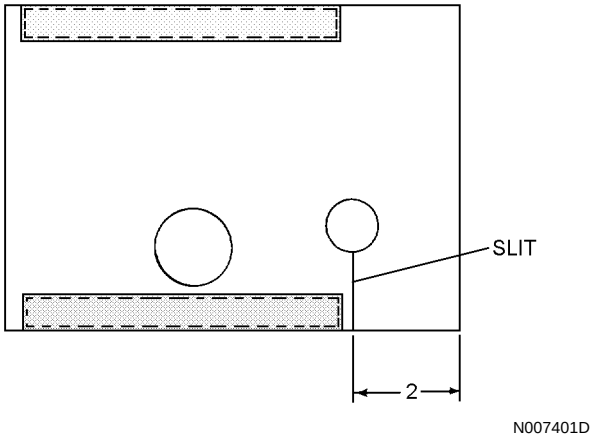

Step 1d - Para 14-74

2. To fabricate a left protective cover, proceed as follows:

a. Cut an 8 1/2-inch length of cloth.

b. Cut a 6-inch length of hook and pile tape and sew to the coated side of the cloth.

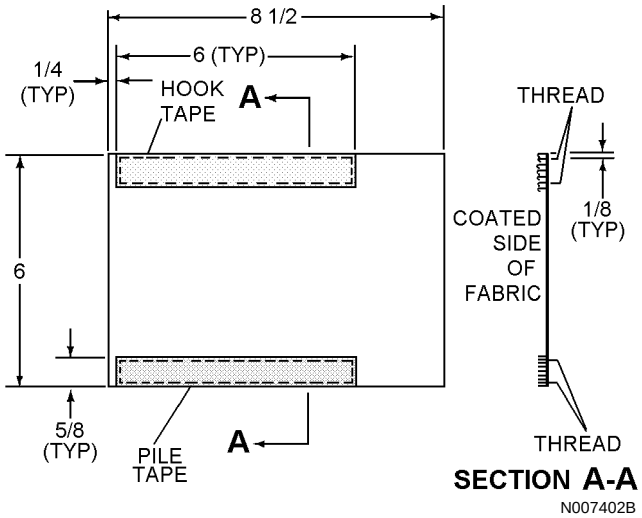

Step 2b - Para 14-74

c. Position cloth, coated side up, over cutting board and punch a 1 7/16-inch diameter hole and a 1-inch diameter hole.

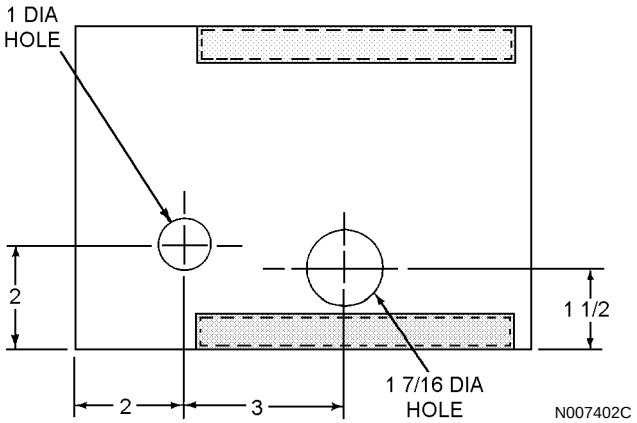

Step 2c - Para 14-74

d. Cut slit into cloth up to the 1-inch diameter hole.

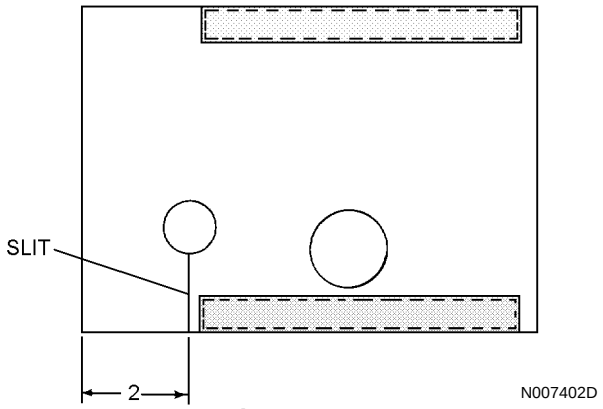

Step 2d - Para 14-74

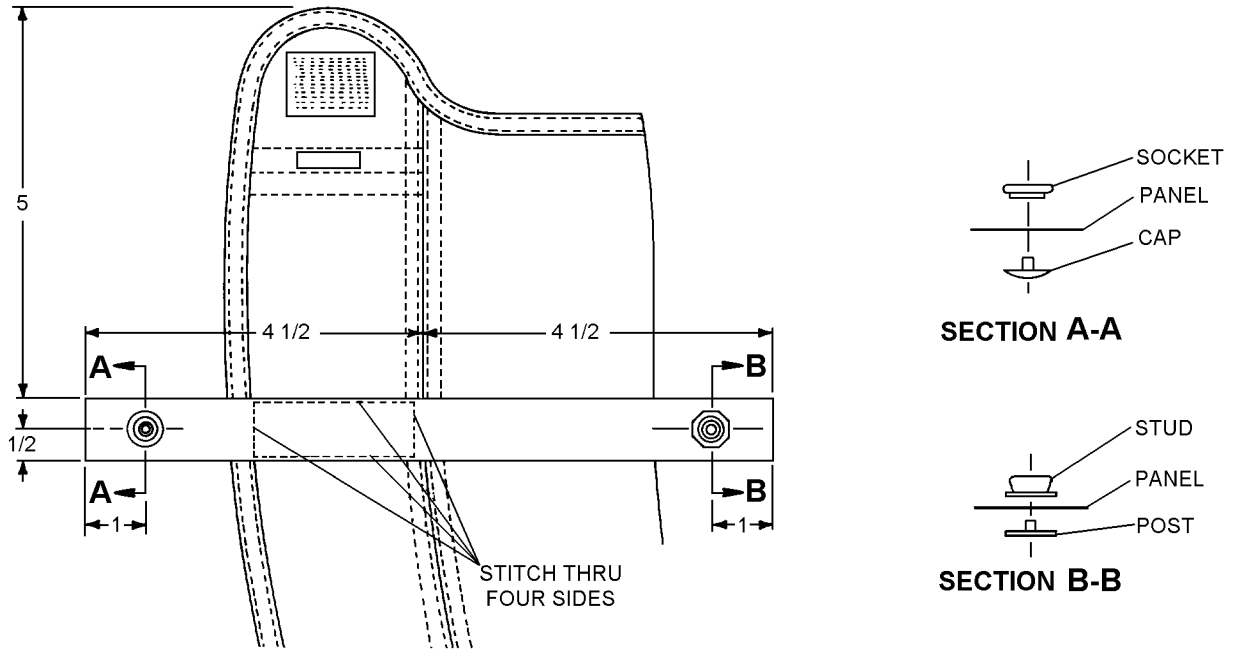

10140009

Figure 14-9. Addition of Webbing Loops

14-75. FABRICATION OF COLLAR LOBE WEBBING LOOPS. To fabricate collar lobe webbing loops, proceed as follows:

Materials Required

Quantity	Description	Reference Number
18-inch Length	Webbing, Nylon, Type IV, 1-inch Width	MIL-T-5038, NIIN 00-261-8579 (CAGE 81349)
2	Post, Snap Fastener	MS27981-5B, NIIN 00-250-6858 (CAGE 96906)
2	Stud, Snap Fastener	MS27981-4B, NIIN 00-901-9660 (CAGE 96906)
2	Socket, Snap Fastener	M527981-3B, NIIN 00-276-4966 (CAGE 96906)
2	Cap, Snap Fastener	M527981-1B, NIIN 00-276-4954 (CAGE 96906)

Materials Required (Cont)

Quantity	Description	Reference Number
As Required	Thread, Nylon Type II, Size E	V-T-295 NIIN 00-204-3884

NOTE

All stitching shall be 10 to 12 stitches per inch, size E nylon thread.

1. Cut two 9-inch lengths of 1-inch wide nylon webbing and sear ends.

2. Sew one piece of webbing to outer side of each collar lobe casing in accordance with dimensions shown in figure 14-9.

3. Position and install snap fasteners in accordance with dimensions shown in figure 14-9, and ensure proper mate.

14-76. FABRICATION AND INSTALLATION OF LOCKING PIN COVER (LPU-21 SERIES LIFE PRESERVERS WITHOUT NO. 3 SPUR GROMMET). Fabricate and install the locking pin cover, for life preservers without No. 3 spur grommet, as follows:

Materials Required

Quantity	Description	Reference Number
1	Socket, Snap Fastener	MS27981-3B NIIN 00-276-4966
1	Cap, Snap Fastener	MS27981-1B NIIN 00-276-4954
As Required	Cloth, Nylon, Polychloroprene-coated, Type I Sage Green	MIL-C-19002 NIIN 00-935-1759
As Required	Thread, Stitching, Nylon, Type I or II, Size E	V-T-295 NIIN 00-204-3884
As Required	Tape, Binding, Nylon, 3/4-inch Wide, Sage Green 1551 Type III	MIL-T-5038 NIIN 00-176-8083

1. Cut basic locking pin cover from polychloroprene coated nylon cloth in dimensions shown in figure 14-10. Define form of locking pin cover using appropriate end of casing waist lobe assembly as pattern.

2. Reinforce fabric with single row stitching around entire perimeter of locking pin cover.

3. Apply 3/4 inch binding tape to perimeter of cover as shown in figure 14-10.

NOTE

Binding tape may be in one continuous strip or two sections

4. Align locking pin cover with mating surface of casing assembly and install in accordance with figure 14-11.

5. Mark snap fastener alignment and install locking pin cover, snap fastener socket and button.

NOTE

When properly aligned with casing assembly, the straight edge of locking pin cover will be butted 1/8 inch from edge of beaded inflation handle snap fastener stud installation (casing main panel subassembly).

14-77. Deleted.

14-78. PACKING PROCEDURE FOR LPU-21/P SERIES LIFE PRESERVER ASSEMBLY.

14-79. The LPU-21/P series shall be packed by qualified personnel at the lowest level of maintenance level possible. For cleaning and servicing refer to paragraph 14-48.

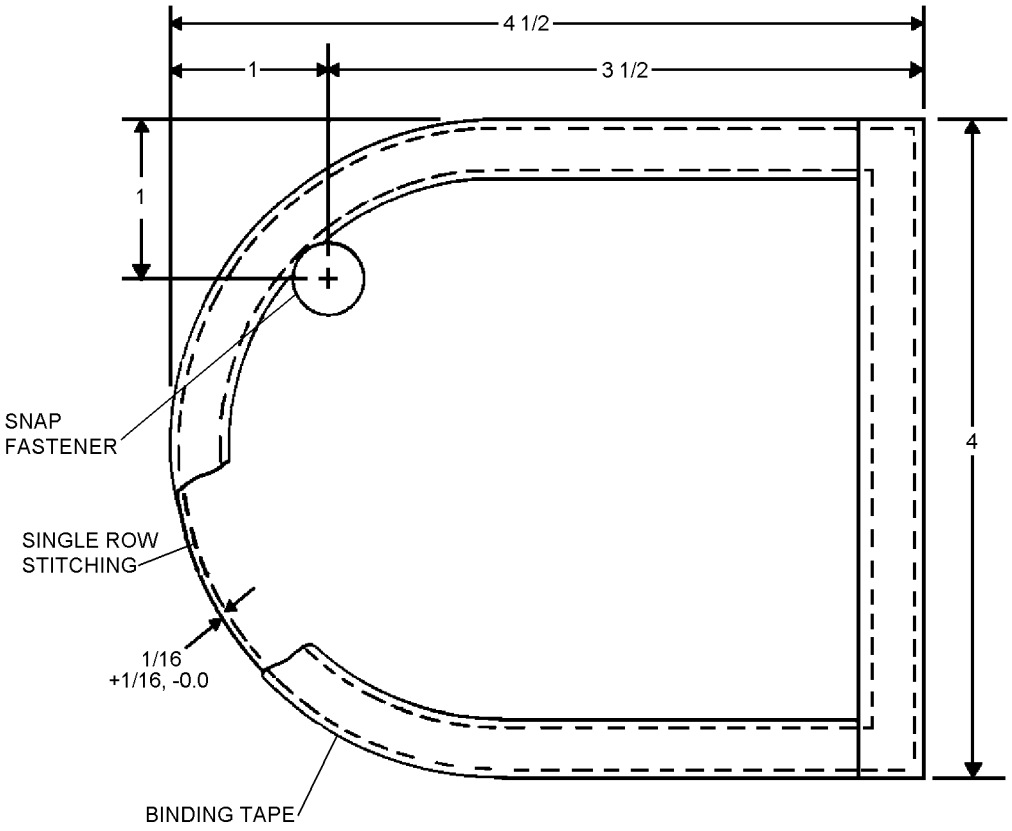

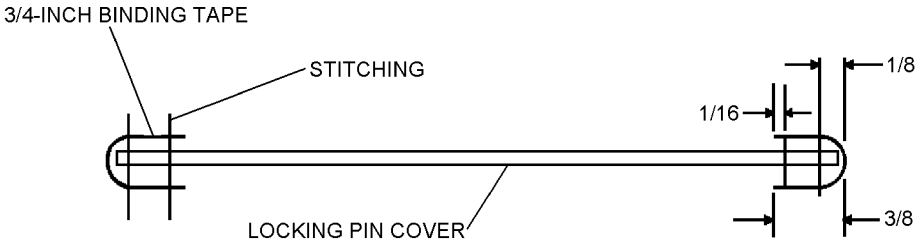

BINDING TAPE INSTALLATION

RIGHT HAND SHOWN - LEFT HAND OPPOSITE

10140010

Figure 14-10. Fabrication of Locking Pin Cover

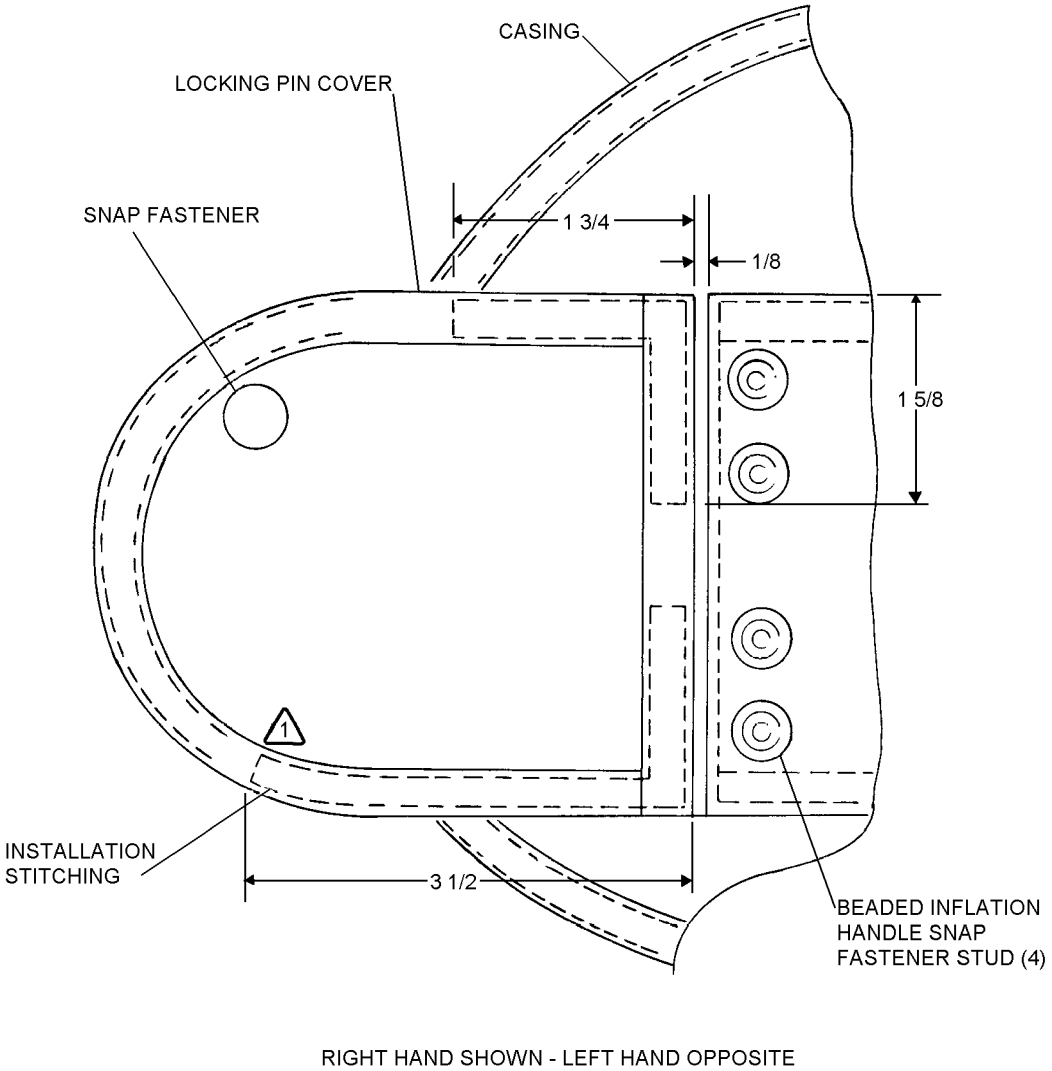

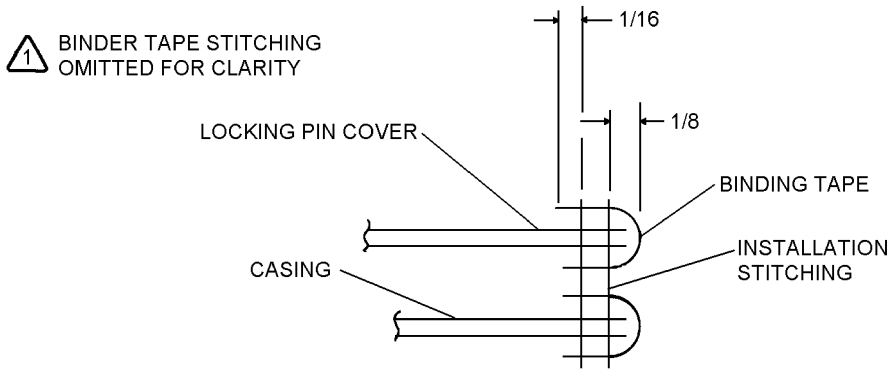

10140011

Figure 14-11. Locking Pin Cover Installation

Figure 14-12 Deleted.

14-80. To pack an LPU-21/P series life preserver assembly, proceed as follows:

Materials Required

Quantity	Description	Reference Number
As Required	Talc, Technical	MIL-T-50036A NIIN 01-080-9589
As Required	Cord, Nylon Type I	MIL-C-5040 NIIN 00-240-2154
As Required	Thread, Nylon Size A	V-T-295 NIIN 00-204-3803
As Required	Thread, Nylon Size E	V-T-295 NIIN 00-204-3884

1. Ensure that life preserver has been inspected in accordance with paragraph 14-23.

2. Prior to packing, ensure that chambers are thoroughly deflated. Ensure all bladder surfaces front and rear are lightly dusted with talc.

3. Oral inflation valve shall be locked by knurled ring and placed in oral valve pocket. Position LPU-21/P series life preserver assembly with collar panel folded down.

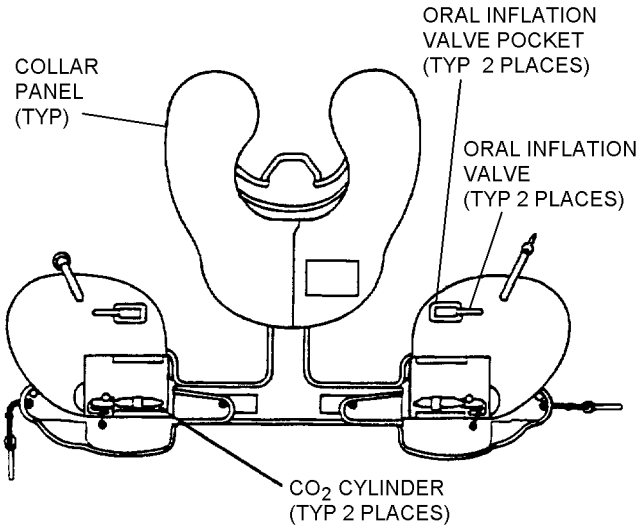

N0080003

Step 3 - Para 14-80

4. Insert collar snaphooks through slots in collar casing and fold collar edge over slots in casing.

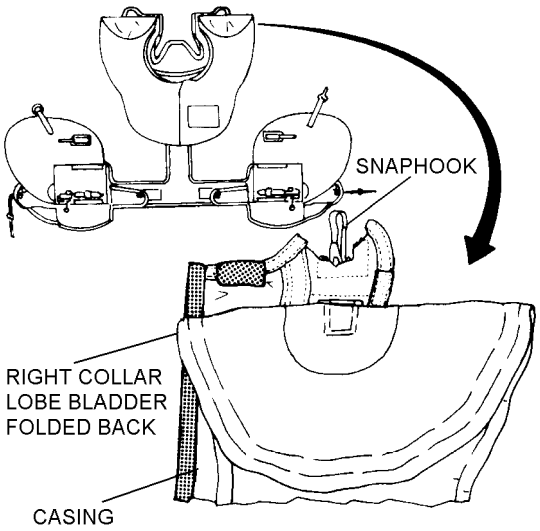

N0080004

Step 4 - Para 14-80

5. Fold over edge of collar panels.

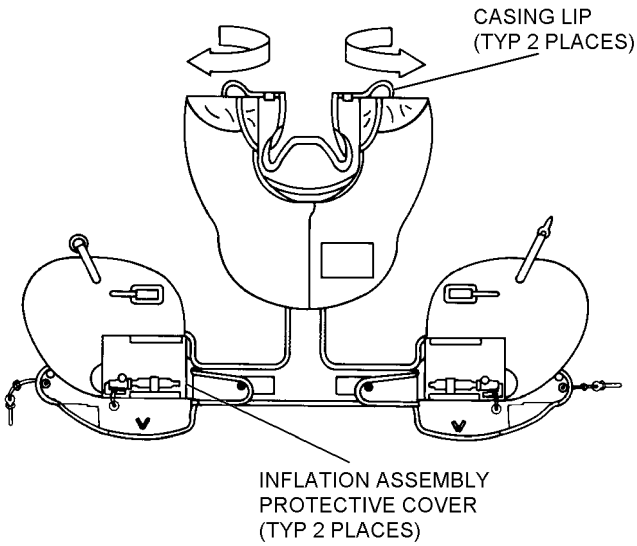

N0080005

Step 5 - Para 14-80

6. Accordion-fold sides of collar lobes into collar casing.

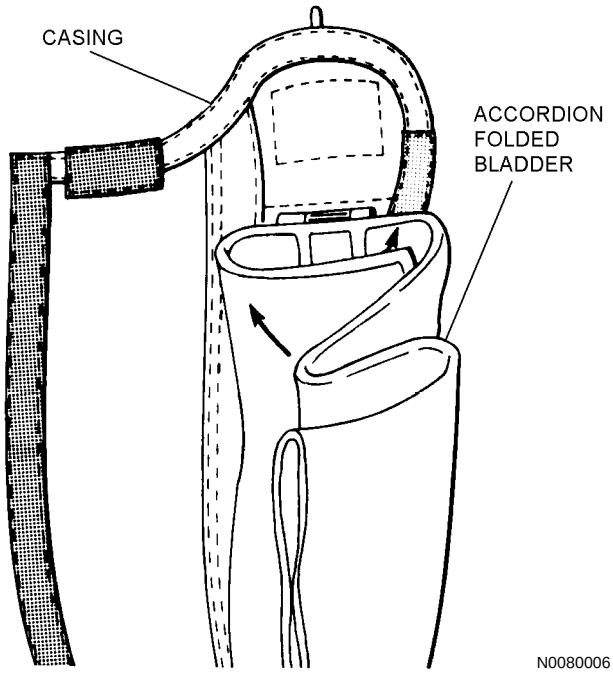

Step 6 - Para 14-80

7. Tuck in casing lip and secure collar casing with hook and pile tape.

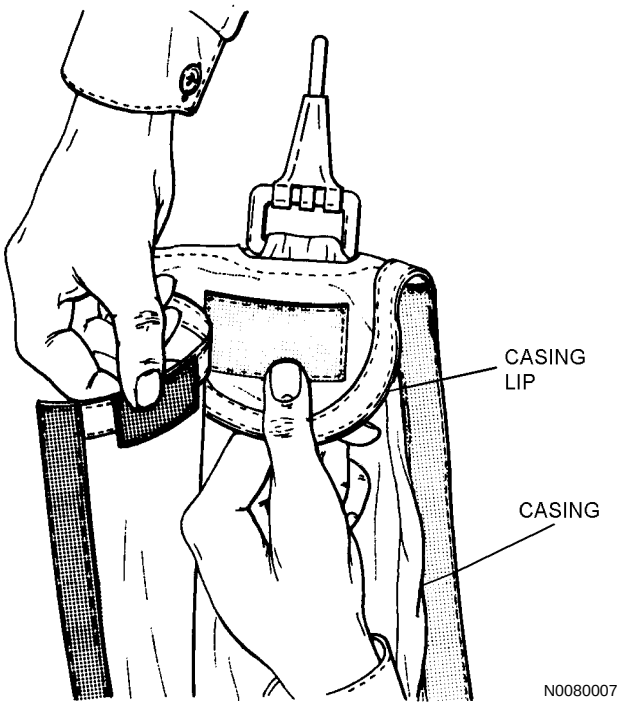

Step 7 - Para 14-80

NOTE

The unsewn 3/8- to 1/2-inch end tab of hook, tape located on the front edge of the collar lobe casing shall be attached to the mating pile tape on the collar casing cover.

8. Close collar lobe section by securing the 3/8- to 1/2-inch unsewn portion of hook tape to pile tape on casing cover.

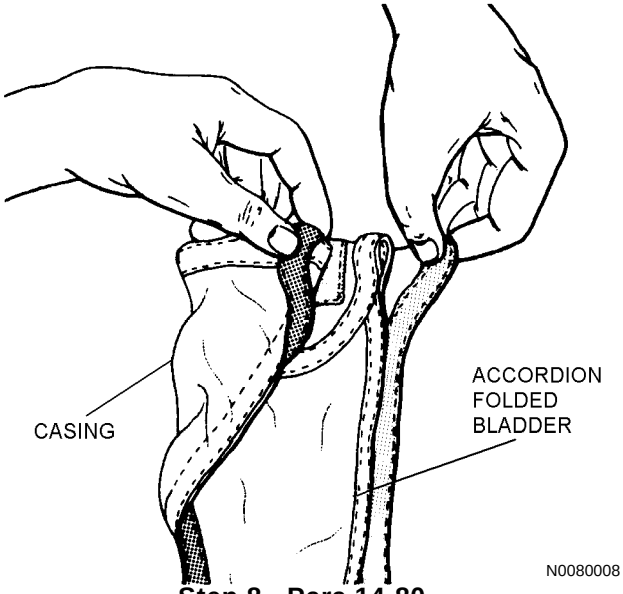

Step 8 - Para 14-80

9. Secure hook and pile tape approximately 8 inches along casing cover edge, securing the accordion-folded bladder within casing cover.

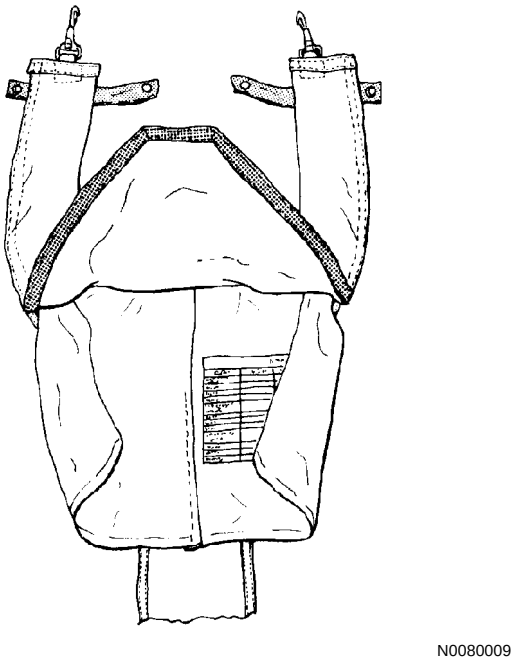

Step 9 - Para 14-80

10. Accordion-fold bottom of collar lobe into collar casing.

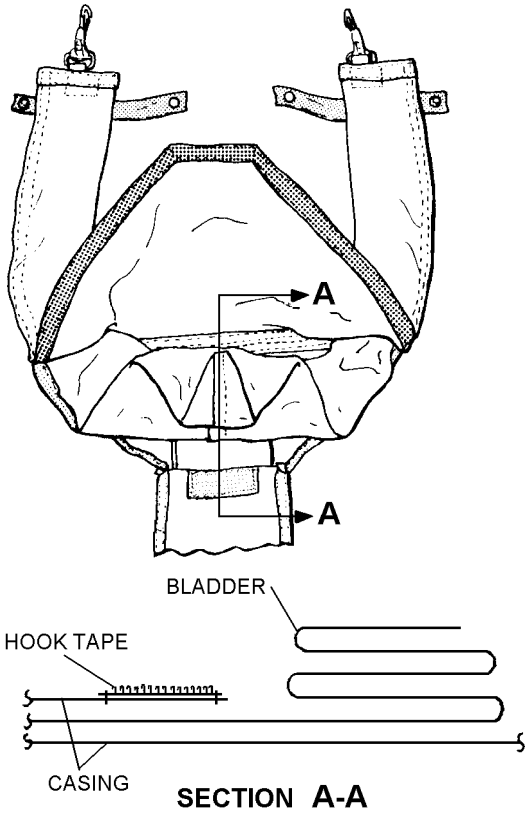

N0080010

Step 10 - Para 14-80

NOTE

The unsewn 3/8- to 1/2-inch end tab of hook tape located on the rear edges of the collar lobe casing shall be attached to the mating pile tape on the collar casing cover.

11. Continue securing hook and pile tape along casing cover edge and casing lip, ending on unsewn end tabs of hook tape, completely enclosing collar lobe bladder within casing cover. Ensure all hook tape is engaged with pile tape and not exposed.

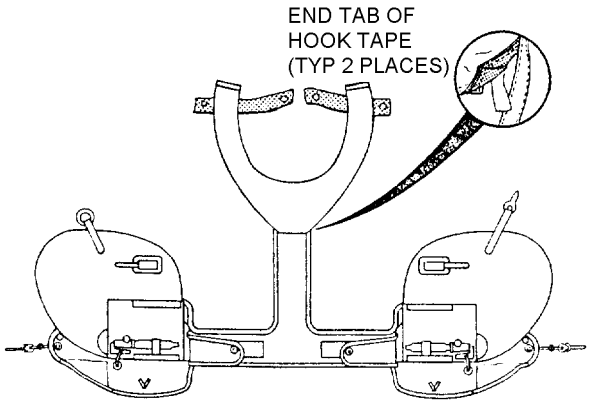

N0080011

Step 11 - Para 14-80

WARNING

Ensure that rubber bands are not used to retain slip-on pockets to D-ring and snap-hook fittings.

12. Insert snaphooks and D-ring into slip-on pockets. Close protective cover around inflation assembly and secure with hook and pile tape.

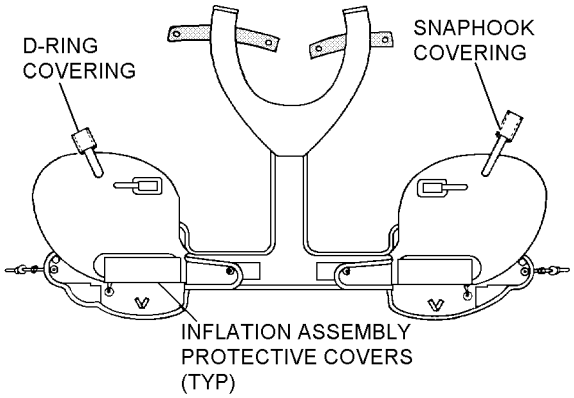

N0080012

Step 12 - Para 14-80

13. Fold waist lobes over to top edge of protective covers.

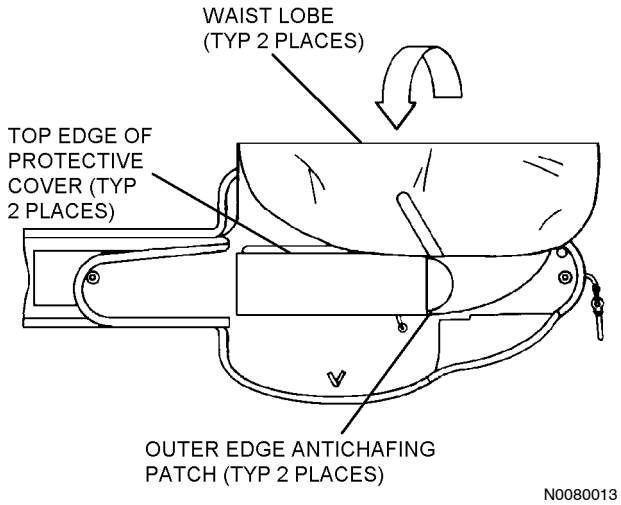

Step 13 - Para 14-80

14. Fold waist lobes over to outboard edge of anti-chafing patch.

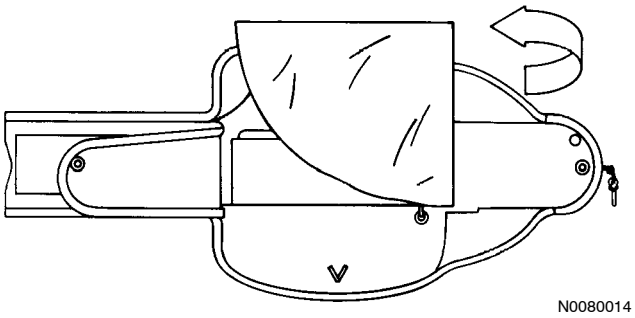

Step 14 - Para 14-80

15. Fold waist lobes over to bottom edge of protective covers.

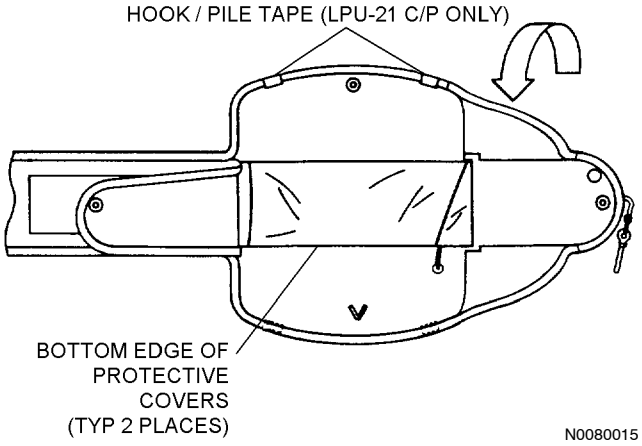

Step 15 - Para 14-80

NOTE

Packing cord shall be used to aid in closing preserver casing.

16. Fold up bottom casing flap containing retaining loop. Insert an 8-inch length of Type I nylon cord through retaining loop.

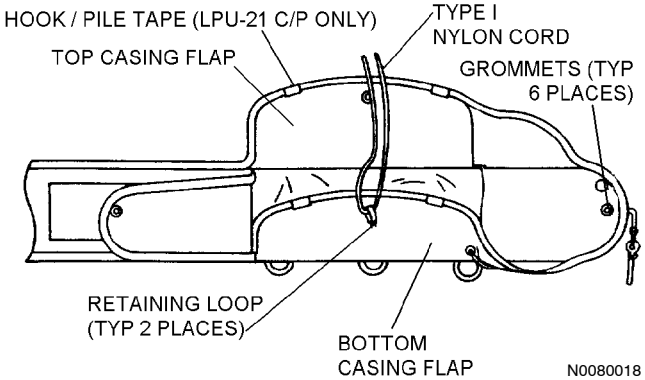

Step 16 - Para 14-80

17. Pass ends of packing cord through grommet located in top casing flap. Pull retaining loop through grommet. Ensure hook and pile strips mate (LPU-21C/P only).

18. Fold inboard casing flap over, passing the packing cord through the grommet. Pull retaining loop through.

19. Route locking pin under locking pin cover flap and through No. 3 spur grommet.

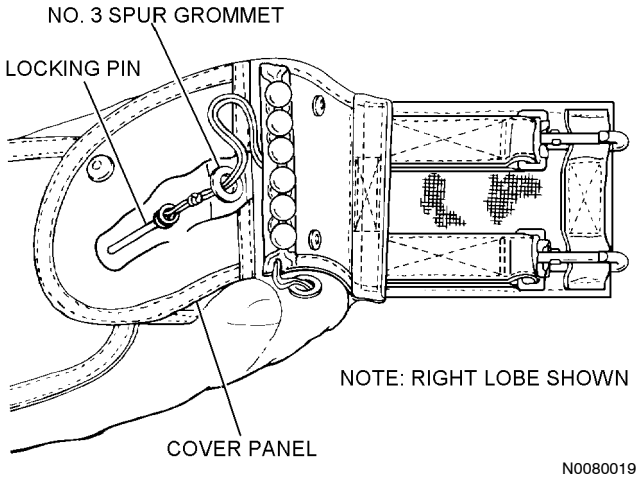

Step 19 - Para 14-80

20. (LPU-21C/P assembly.) Route locking pin through slot under locking pin cover flap. Webbing panel and spur grommet have been deleted on newly procured life preserver assemblies.

WARNING

To avoid possible injury when closing casing of right waist lobe, do not place palm of hand on waist closure snaphooks.

21. Fold outboard casing flap over, passing packing cord through grommet. Pull retaining loop and into pin through retaining loop and into pin keeper loop. Remove packing cord.

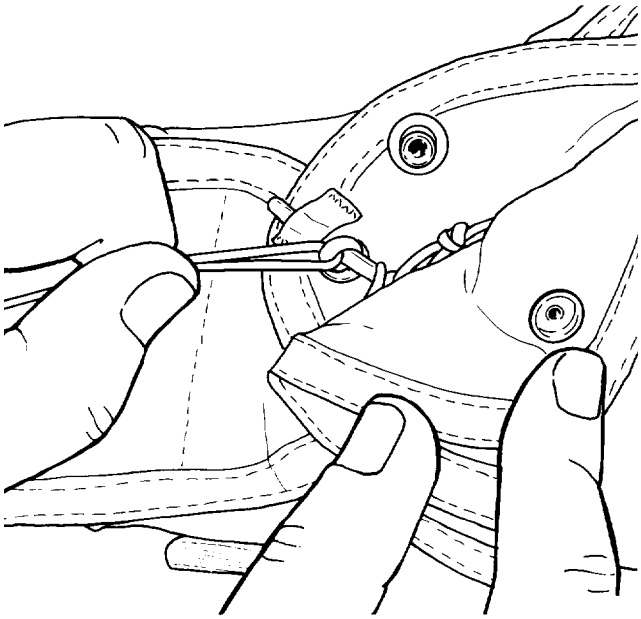

N0080021

Step 21 - Para 14-80

22. Safety-tie eye of locking pin to retaining loop with one turn of size A nylon thread, single. Safety-tie beaded inflation handle with one turn of size E nylon thread, single. Draw thread sufficiently to permit a 1/2 ± 1/8-inch space between middle beads and webbing on preserver. Tie ends of both safety ties with a surgeon's knot followed by a square knot.

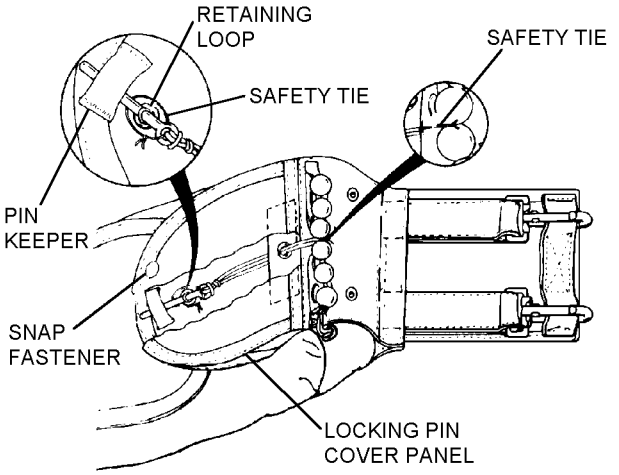

N0080022

Step 22 - Para 14-80

23. Close locking pin cover panel.

NOTE

NAVAIR 13-1-6.5, Rescue and Survival Equipment, contains information on inspection and replacement of survival items.

24. When required, ensure that survival items have been inspected for expiration and damage.

NOTE

Each survival item shall be secured to the snap fastener tab of its respective pouch with a 36-inch length (DYE MARKER) or 80-inch length (FLARES) of nylon cord (MIL-C-5040, Type I). Sear ends of each cord.

25. When required, insert two dye markers into pouch labeled DYE MARKER. Insert two Marine Smoke and Illumination Signals into pouch labeled FLARES. Fake excess line and secure with rubber bands.

26. Make necessary entries on appropriate form in accordance with OPNAVINST 4790.2 Series.

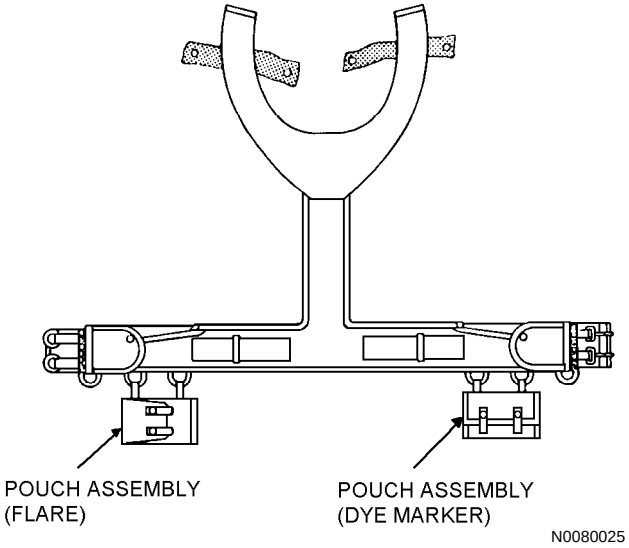

Step 25 - Para 14-80

Section 14-4. Illustrated Parts Breakdown (IPB)

14-81. GENERAL.

14-82. This section lists and illustrates the assemblies and detail parts of the LPU-21/P Series Life Preserver Assembly.

14-83. The Illustrated Parts Breakdown should be used during maintenance when requisitioning and identifying parts.

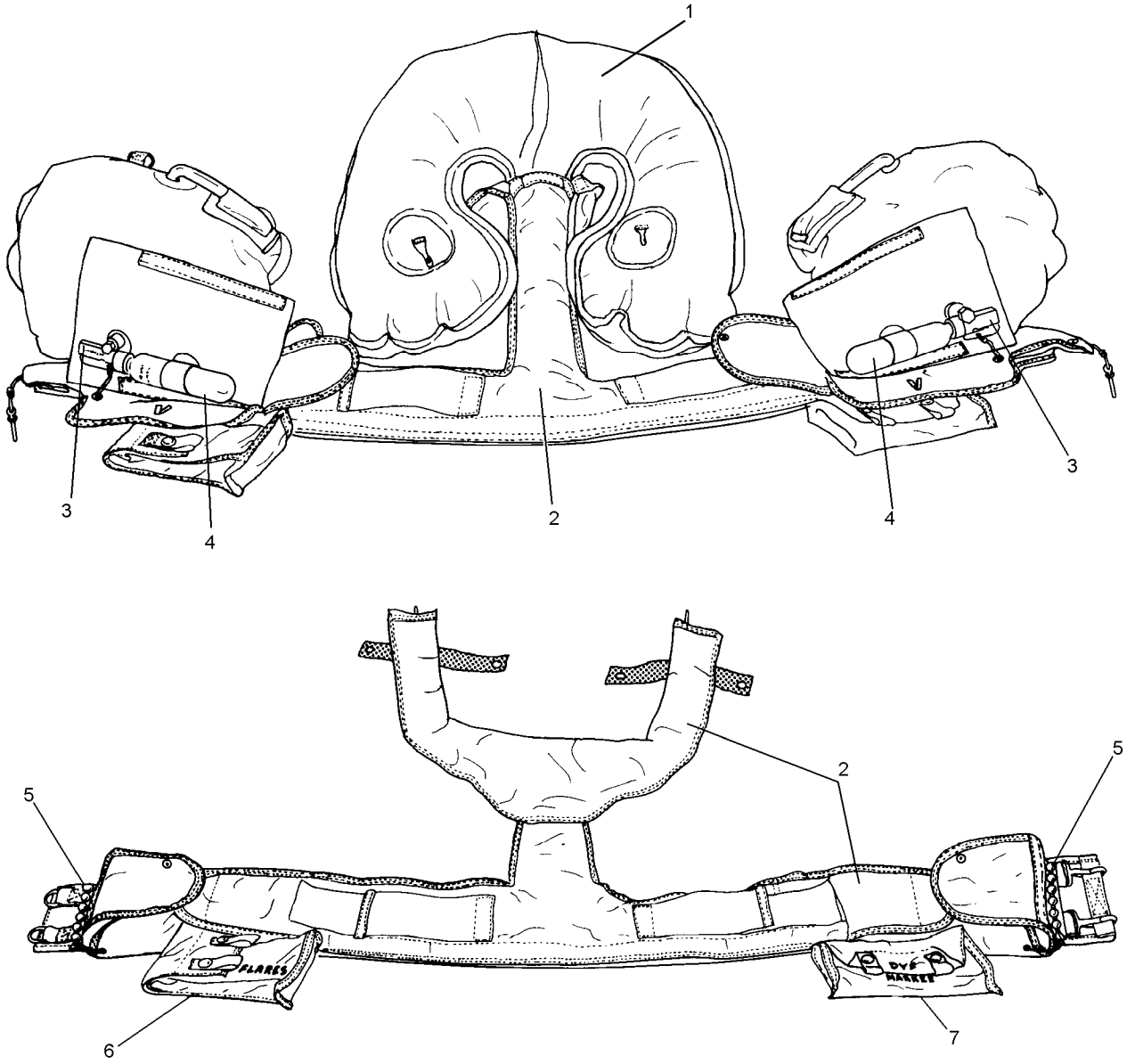

10140013

Figure 14-13. LPU-21/P Series Life Preserver, Illustrated Parts Breakdown

Figure and Index Number	Part Number	Description 1 2 3 4 5 6 7	Units Per Assembly	Usable On Code
14-13	No Number	LPU-21/P SERIES LIFE PRESERVER	REF	
-1	68A73H1-101 (NIIN 01-120-4894)	. INFLATABLE LIFE PRESERVER LPU-21B/P	1	
	68A73H1-103 (NIIN 01-120-4894)	. INFLATABLE LIFE PRESERVER LPU-21C/P	1	
-2	975AS103-301 (NIIN 01-120-4751)	. . CASING ASSEMBLY, LPU-21B/P	1	
	975AS103-303 (NIIN 01-120-4751)	. . CASING ASSEMBLY, LPU-21C/P	1	
-3	MIL-I-23145 (NIIN 00-012-3571)	. . INFLATION ASSEMBLY, Type II	2	
	105AS100-3	. . . GASKET, Top (30003) (Note 2)	1	
	105AS100-4	. . . GASKET, Bottom (30003) (Note 2)	1	
	105AS100-2	. . . GASKET, Seat Seal (30003) (Note 2)	1	
-4	MIL-C-25369 (NIIN 01-077-8773)	. . . CO_2 CYLINDER, Type III, 35 Gram	2	
-5	975AS121-11 (NIIN 00-120-4752)	. . . BEADED INFLATION HANDLE . . . . . . Type I	2	
-6	68A73D3-61 (NIIN 00-118-6187)	. . FLARE POUCH ASSEMBLY . . . . . . (Note 1)	1	
-7	68A73D2-41 (NIIN 00-118-6186)	. . DYE MARKER POUCH ASSEMBLY . . . . . . (Note 1)	1	

Notes:
1. Optional equipment at the discretion of the Squadron Commander.
2. Top, bottom, and seat seal gaskets are obtained from Valve Stem and Seat Seal Kit, P/N 105AS100-5, NIIN 00-498-6964, which contains two top, two bottom, and two seat seal gaskets.

NUMERICAL INDEX

Part Number	Figure and Index Number	SM&R Code
MIL-C-25369	14-13-4	PAGZZ
MIL-I-23145	14-13-3	PAGZZ
105AS100-2	14-13-3	
105AS100-3	14-13-3	
105AS100-4	14-13-3	
68A73D2-41	14-13-7	PAGZZ
68A73D3-61	14-13-6	PAGZZ
68A73H1-101	14-13-1	PAOGG
68A73H1-103	14-13-1	PAOGG
975AS103-301	14-13-2	PAGZZ
975AS103-303	14-13-2	PAGZZ
975AS121-11	14-13-5	PAGZZ

THIS PAGE INTENTIONALLY LEFT BLANK.

CHAPTER 15

LIFE PRESERVER ASSEMBLIES LPU-21D/P AND LPU-35/P

Section 15-1. Description

15-1. GENERAL.

WARNING

LPU-21/P Series life preserver assemblies shall not be used in aircraft equipped with ejection seats.

NOTE

The LPU-35/P Life Preserver is a modified LPU-21D/P Life Preserver (extension panel added). Unless otherwise indicated all references to and maintenance requirements of LPU-21D/P also apply to the LPU-35/P Life Preserver.

15-2. The LPU-21D/P life preserver assembly is authorized for use by all aircrew personnel wearing compatible flight clothing. It is designed as a constant wear item for use with the SV-2B Survival Vest.

15-3. CONFIGURATION.

WARNING

LPU-21/P life preserver assemblies shall not be configured with the FLU-8/P series automatic inflation device.

15-4. Incorporation of the beaded inflation handle assembly improved activating lanyard accessibility. It also provided the inflation system with a multidirectional pull capability. Further improvements in the LPU-21/P series have resulted in the updated LPU-21D/P life preserver which features a heat sealed flotation bladder.

NOTE

The LPU-21C/P flotation assembly may be used in conjunction with the LPU-21D/P casing assembly. This configuration has been designated LPU-21C(V)1/P. See Chapter 26.

CAUTION

Only Polyurethane adhesives and Polyurethane-coated cloth and patches shall be used on Polyurethane-coated LPU-21D/P life preserver assemblies.

15-5. The LPU-21D/P Life Preserver weighs four pounds (without survival items). It consists of a casing assembly, flotation assembly, and carbon dioxide (CO_2) inflation assemblies. Two independent flotation chambers provide a combined minimum buoyancy of 65 pounds. One chamber consists of the left waist lobe joined by a channel to the right collar lobe. The other chamber is comprised of the right waist lobe joined by a channel to the left collar lobe. The two chambers are sewn together at the center seam flash of the collar lobes. Each chamber is serviced by a CO_2 inflation assembly and an oral inflation valve which are installed in each waist lobe (see figures 15-1 and 15-2.)

15-6. The design of the heat sealed inflation chambers provides an integral protective pocket for the oral inflation valve. The pocket consists of a narrow open-end sleeve extending from the upper seam of each waist lobe bladder (figure 15-2). When folded at its root toward the oral inflation valve, the sleeve becomes a pocket positioned for insertion of the valve.

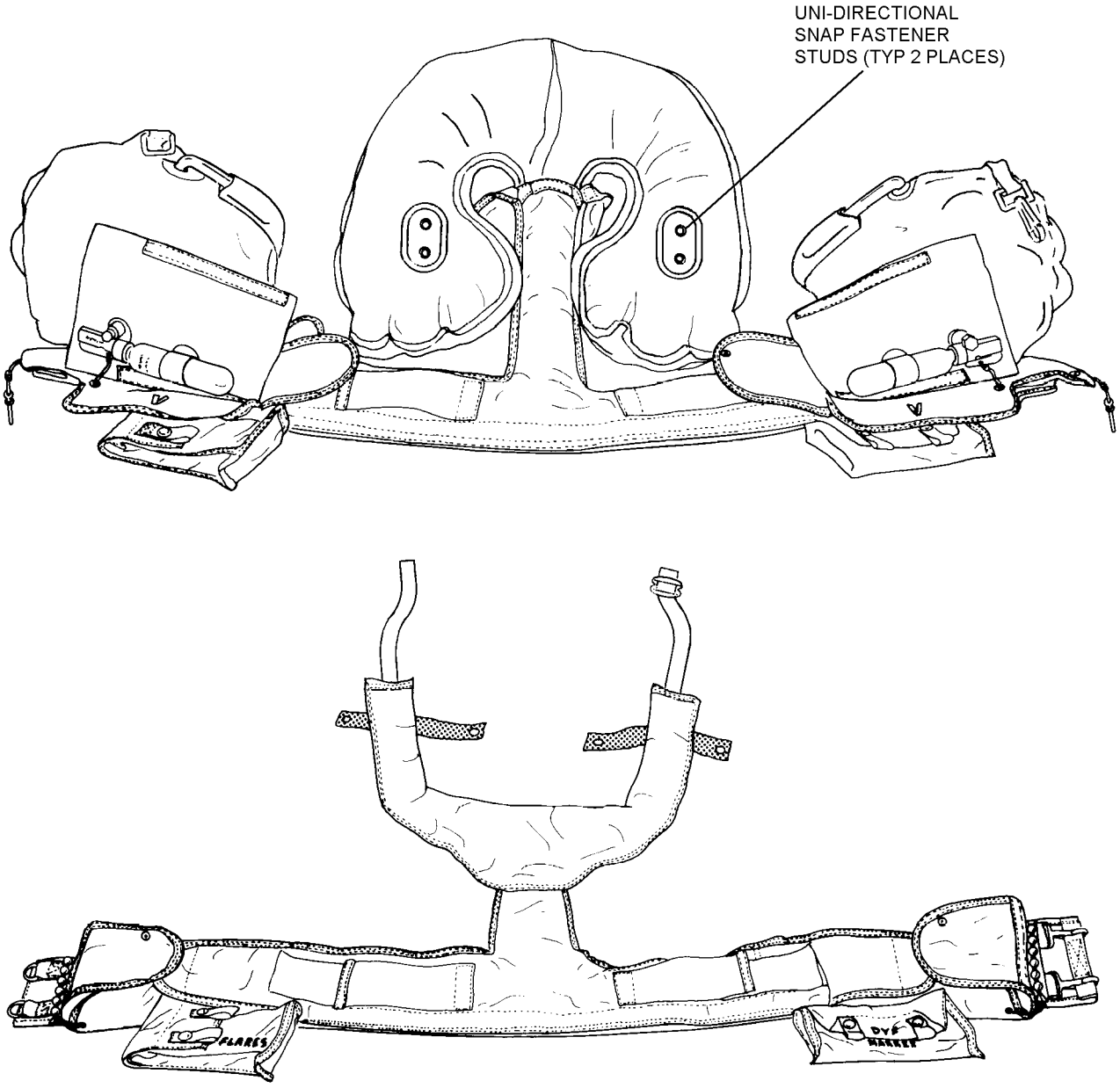

10150001

Figure 15-1. LPU-21D/P Life Preserver Assembly

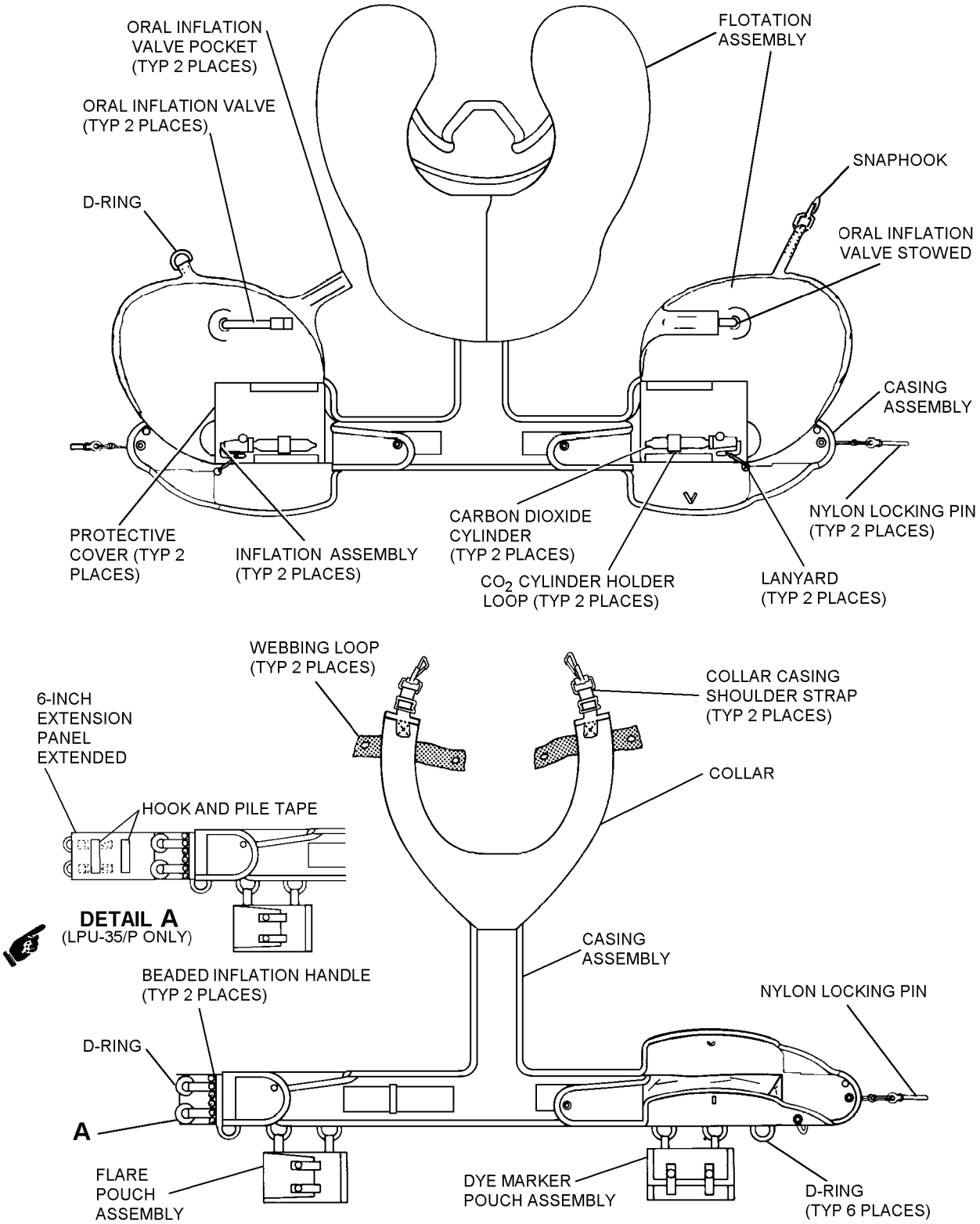

10150002

Figure 15-2. LPU-21D/P and LPU-35/P Life Preserver Assembly, Parts Nomenclature

15-7. Attached to each waist lobe of the flotation assembly is an attachment patch with six uni-directional snap fastener sockets installed. These snap fastener sockets, when mated to six uni-directional snap fastener studs on the casing assembly, secure the waist lobes of the flotation assembly to the casing assembly. The right waist lobe is equipped with a snaphook which connects with a D-ring on the left waist lobe to secure the lobes together after inflation.

NOTE

The uni-directional snap fastener socket is installed with the dot on its button oriented to the side of the fastener on which lift must be applied to disengage the socket from the snap fastener stud.

15-8. Two uni-directional snap fastener studs, whose centers are 1 1/4 inches apart, are installed on each collar lobe of the flotation assembly. The snap fastener studs connect with two uni-directional snap fastener sockets on the casing collar assembly to secure the flotation collar lobes to the casing collar assembly. The dots on the two buttons of the casing assembly uni-directional snap fastener sockets are oriented to the inside, facing each other. To disengage the sockets from the uni-directional snap fastener studs, insert one finger beneath the edge of the casing fabric between the two snap fasteners and apply lift.

15-9. CASING ASSEMBLY. The casing assembly, which is constructed of fire retardant aramid cloth, provides a protective cover for the flotation assembly. The casing assembly consists of the adjustable casing, belt keeper loops, uni-directional snap fastener sockets on the collar assembly (which mate with snap fastener studs on the collar lobes), uni-directional snap fastener studs on the inside waist portion (which mate with snap fastener sockets on the waist lobes), and the front connector assembly.

15-9A. The LPU-35/P has a six-inch extension panel added to the waist portion of the casing assembly which, when extended, permits wearing the LPU-35/P over heavy/winter flight clothing.

15-10. The webbing belt, which was a part of the LPU-21A, -21B and -21C/P has been deleted from the LPU-21D/P. Webbing belt keeper loops have been retained and provide a means for attaching the survival vest about the wearer's waist. Six D-rings attached to the webbing belt keeper loops provide attach points for the life raft retaining line and other accessories.

15-11. Hook and pile tapes, attached to the outside waist portion of the casing, are used for slack adjustment. In addition, hook and pile tapes, attached about the periphery of the collar casing and the lower edge of the back portion of the casing, are used to enclose the casing assembly about the flotation assembly.

15-12. The front connector assembly secures the casing assembly about the wearer's waist. The front connector assembly consists of two snap-hooks and two D-rings backed by webbing pads to prevent abrasion and discomfort.

15-13. FLOTATION ASSEMBLY. The flotation assembly is constructed of polyurethane coated nylon and consists of two independent flotation chambers. The waist lobe of each chamber contains an oral inflation valve and a primary valve stem upon which the inflation assembly is installed. A check valve is installed in the valve stem to prevent back-pressure leakage. There are two snap fastener studs affixed to each collar lobe which mate with uni-directional snap fastener sockets on the casing assembly. Attached to each waist lobe is an attachment patch containing six uni-directional snap fastener sockets which secure the waist lobes to the casing assembly. Each of the six snap fasteners of the attachment patch requires lift from a different direction (figure 15-10) to disengage flotation lobe from casing assembly. This is a safety factor to prevent separation of the flotation lobe upon impact when entering the water from a height.

NOTE

The uni-directional snap fastener socket is installed with the dot on its button oriented to the side of the fastener on which lift must be applied to disengage the socket from the snap fastener stud.

15-14. INFLATION ASSEMBLY. A carbon dioxide (CO_2) inflation assembly services each of the inflation chambers of the flotation assembly. The inflation assembly consists of the body (inflator) of the assembly, upper and lower pressure-seal gaskets, and a cap nut which secures the inflator to the valve stem installed in the waist lobe and serves as a cap for the valve stem. The assembly also includes a 35 gram Type III carbon dioxide cylinder which is threaded, with an O-ring, into the inflator body. An inflation lanyard attached to the actuating lever of the inflation assembly connects with the beaded inflation handle and the nylon locking pin of the casing assembly.

15-15. APPLICATION.

15-16. The LPU-21D/P life preserver is authorized for use only by aircrew personnel in aircraft without ejection seat systems. It was designed for use as a constant wear item with the SV-2 survival vest system by aircrew personnel wearing compatible flight clothing.

NOTE

Compatible flight clothing for LPU-35/P includes heavy/winter flight clothing.

15-17. FUNCTION.

NOTE

Although the beaded inflation handle provides a multidirectional capability for initiating inflation of the life preserver, only the most effective and commonly used method is discussed here.

15-18. Inflation of the LPU-21D/P life preserver is initiated by pulling both beaded inflation handles in a natural, slightly down and straight out direction away from the body. The resulting action removes the nylon locking pins, which secure the casing assembly about the waist lobes, and actuates the inflation assembly. As the flotation assembly inflates, the hook and pile tapes securing the casing assembly about the collar separate to free the collar lobes. After inflation, the flotation assembly D-ring and snap-hook on the waist lobes must then be connected by the wearer.

NOTE

After each functional inflation, the CO_2 cylinder and seat seal gasket must be replaced with a charged CO_2 cylinder and a new seat seal gasket.

The casing must be manually opened and the flotation assembly unfolded prior to inflating a preserver through the oral inflation valve.

15-19. In an emergency situation, the oral inflation valves may be used to top-off an inflated preserver, maintain inflation of a leaky preserver or inflate a chamber if an inflation assembly malfunctions. The oral inflation valves are also used to inflate a preserver with air during an inspection test and to evacuate a preserver in preparation for packing.

15-20. Survival item pouches are attached to the life preserver casing. The dye marker and signal flares are not initially supplied and must be individually requisitioned. Refer to table 15-1 and see figures 15-1 and 15-2.

Table 15-1. LPU-21D/P Survival Items

Description	Quantity Required	Reference Number	NIIN	SM&R Code
Dye Marker (Note 1)	2	MIL-S-17980	00-270-9986	PAOZZ
Signal, Smoke and Illumination, Marine MK-124 MOD 0 (Note 1)	2	—	01-030-8330	PA--Z

Notes: 1. Optional equipment at the discretion of the Squadron Commander.

Section 15-2. Modifications

15-21. GENERAL.

15-22. Refer to table 15-2 for current modifications to the LPU-21D/P Life Preserver.

15-23. There are no other modifications currently authorized for LPU-21D/P.

Table 15-2. LPU-21D/P Directives

Description	Application	Modification Code
Fabrication and Installation of Casing Extension Panel	LPU-21D/P Life Preservers (Note 1)	ACC 523 Rev A
Notes: 1. After modification, the LPU-21D/P shall be redesignated as LPU-35/P Life Preserver.		

Section 15-3. Maintenance

15-24. GENERAL.

15-25. This section contains information on inspection, disassembly, repair/replacement, testing, and reassembly of the LPU-21D/P life preserver.

15-26. INSPECTION.

15-27. All life preservers shall be subjected to Preflight, Special and Calendar/Phase Inspections.

15-28. The Preflight Inspection shall be performed on life preservers prior to each flight by the aircrewmember to whom the life preserver is assigned. The Preflight Inspection shall be performed on life preservers installed in aircraft prior to each flight by assigned aircrewmembers.

15-29. The Special Inspection shall be performed on all aircraft installed life preservers at intervals not to exceed 30 days. The inspection shall be performed at the organizational level of maintenance by personnel assigned to the Aviator's Equipment Branch.

15-30. Upon completion of the inspection, make necessary entries on the appropriate form in accordance with OPNAVINST 4790.2 Series. The 30-Day Special Inspection may be recorded on a separate history card from the history card recording Calendar/Phase Inspections, functional checks, and modifications.

NOTE

The Calendar Inspection interval for preservers assigned selected air reserve aircrewmembers has been extended to 180 days vice 90 days, providing preservers are stowed under controlled conditions.

15-31. The Calendar/Phase Inspection shall be performed on all life preservers prior to placing in service. The inspection cycle thereafter shall be as follows: personal issue life preservers shall be inspected once every 90 days. Aircraft-installed life preserver inspection shall coincide with the inspection cycle of the aircraft in which installed. See applicable Planned Maintenance System (PMS) publications for specific intervals. In no case shall the interval exceed 231 days. Unless operational requirements demand otherwise, the life preserver Calendar/Phase Inspection shall be performed by the intermediate level of maintenance or above. The functional test shall be performed prior to placing in service, every fourth inspection cycle thereafter, and whenever an inflation assembly is replaced. The leakage test shall be performed during every inspection cycle. If inspection indicates damage, complete appropriate forms in accordance with OPNAVINST 4790.2 Series and forward entire assembly to supply. Refer to paragraph 15-59 for determination of repairability.

15-32. QUALITY ASSURANCE. Properly detailed procedures present a logical sequence for the inspection process. The more critical procedures are underlined to designate steps which require a Quality Assurance inspection to assure performance of specific requirements. After the underlined step is performed by the Aircrew Survival Equipmentman, the procedure shall be verified before the next step is performed. This verification shall be performed by a Collateral Duty Inspector or Quality Assurance Representative (CDI, CDQAR, or QAR). Work Center supervisors are primarily responsible for quality assurance within their centers. OPNAVINST 4790.2 Series permits supervisors to nominate their more experienced personnel to serve as quality assurance inspectors. Nominated personnel shall be screened and examined by the Quality Assurance Officer prior to their designation as Quality Assurance Inspectors or Quality Assurance Representatives by the Commanding Officer. Under no circumstances shall an Aircrew Survival Equipmentman perform his own quality assurance inspection.

15-33. PREFLIGHT/SPECIAL INSPECTION. To perform a Preflight/Special Inspection, proceed as follows:

CAUTION

Do not open any sealed or safety-wired/safety tied portions of preserver for Preflight/Special Inspection.

1. Inspect exposed metal parts for corrosion and damage.

2. Inspect for presence, security of attachment and, if applicable, operation of survival items.

3. Inspect casing fabric for cuts, tears, abrasions, security of stitching, and other damage.

4. Ensure beaded inflation handles are secured to snap fasteners. Inspect safety ties on beaded inflation handles. The beaded inflation handle safety ties may be replaced without removing the life preserver from service.

5. Inspect safety ties on locking pins.

6. Inspect rivets securing flotation assembly to casing for presence and security of attachment.

7. Inspect uni-directional snap fasteners securing flotation assembly to casing assembly for presence, security of attachment, corrosion, and ease of operation.

8. Inspect hook and pile tape closure at collar for separation; fasten as necessary.

9. Adjust and don preserver to ensure proper fit.

10. If any discrepancy is noted, the preserver shall be removed from service and repaired in accordance with procedures in this volume.

15-34. ACCEPTANCE/CALENDAR/PHASE INSPECTION. The Acceptance/Calendar/Phase Inspection consists of the following tasks:

1. Beaded Inflation Handle Inspection
2. Case, Container/Pouch Inspection
3. Functional Test (every fourth inspection cycle)
4. Visual Inspection
5. Life Preserver Configuration
6. General Inspection
7. Markings Inspection
8. Survival Items Inspection
9. Inflation Assembly Inspection
10. Beaded Inflation Handle Pull Test
11. Leakage Test
12. Records Updating
13. Repacking

15-35. BEADED INFLATION HANDLE INSPECTION. Inspect beaded inflation handle for the following:

1. Attachment of inflation lanyard to beaded handle.

2. Attachment of locking pin lanyard to beaded handle. Overhand knot on locking pin lanyard shall be within 3/4 inch from eye of pin.

3. Corrosion on snap fasteners and ease of operation.

4. Cuts, tears, deterioration, abrasion, stains, and general cleanliness of fabric.

5. Presence of safety tie on beaded inflation handle.

15-36. CASE, CONTAINER/POUCH INSPECTION. To inspect cases, containers, and/or pouches, proceed as follows:

1. Inspect fabric for cuts, tears, deterioration, abrasion, stains, and general cleanliness.

2. Inspect seams for proper adhesion or stitching.

3. Inspect straps and loops for security and wear. Inspect tackings on the collar casing shoulder straps for security.

4. Inspect any other parts for wear, damage, and security.

NOTE

Life preservers missing the D-rings used to attach dye marker and flare pouches shall be considered serviceable provided the aircrewmember to whom it is issued does not desire to utilize the pouches.

5. All hardware for security of attachment, corrosion, damage, wear and, if applicable, ease of operation.

6. Inspect uni-directional snap fastener assemblies for presence, security of attachment, proper orientation, ease of operation, corrosion, and wear.

NOTE

All uni-directional snap fasteners shall be installed with the dot on the button of the snap fastener socket positioned on the side of the snap fastener to which lift must be applied to disengage the socket from the snap fastener stud.

All snap fasteners on the attachment patch of each flotation lobe shall be installed with the dot on each socket button positioned nearest to, and pointing toward, the center point of the attachment patch.

7. If any discrepancies are found, the case, container, or pouch shall be repaired or removed from service as deemed appropriate by the inspection activity.

15-37. FUNCTIONAL TEST. To perform a functional test, proceed as follows:

CAUTION

Ensure area surrounding preserver is free of foreign objects.

1. Completely open preserver casing prior to conducting functional test. Both release pins shall be removed from their respective loops, the collar hook and pile tape fasteners shall be separated, and the waist and collar lobes shall be completely unfolded and laid out flat.

2. Actuate inflation assemblies.

3. The preserver shall fully inflate to design shape, without evidence of restriction, in less than 30 seconds.

4. If preserver does not properly inflate, determine cause. Ensure stem and valve are clean and free of foreign matter.

5. If correction is made, the preserver shall be functionally tested again.

6. Deflate preserver in accordance with paragraph 15-38 to remove all CO_2.

15-38. DEFLATION. To deflate a life preserver, proceed as follows:

Support Equipment Required

Quantity	Description	Reference Number
1	Pump, Rotary Vacuum (or equivalent)	NIIN 00-052-5015 (90567)
As Required	Hose, 3/8- or 1/2-inch Inside Diameter, Rubber	—

1. Attach one end of rubber hose to vacuum pump.

2. Deflate through oral inflation valves. Unlock oral inflation valve, hold in open position, and hold vacuum pump hose against end of oral inflation valve. When compartment is collapsed, release oral inflation valve. Screw lock closed.

15-39. VISUAL INSPECTION.

CAUTION

Remove all carbon dioxide cylinders prior to inflating life preserver with air.

NOTE

If suitable air source is not available, water-pumped nitrogen (FED SPEC BB-N-411) may be substituted.

15-40. Prior to visually inspecting a life preserver assembly, the life preserver shall be inflated with air to 1.0 psig.

15-41. LIFE PRESERVER CONFIGURATION. The life preserver shall be updated by comparing it to the configuration illustrations, figures 15-1 and 15-2, and Section 15-4.

15-42. GENERAL INSPECTION. Examine life preservers for the following:

NOTE

Refer to the referenced paragraph number, at end of inspection for repairs.

1. Preserver fabric for cuts, tears, punctures, deterioration and abrasion. Refer to paragraph 15-61 for repair instructions.

2. Flotation assembly seams for proper adhesion. Refer to paragraph 15-67 for instructions.

3. Valve inlet stems for security.

4. Oral inflation valve(s) for cracks, security, ease of operation, and corrosion.

5. Patches for proper adhesion and wear. Refer to paragraph 15-64 for repair instructions.

6. Any other parts for wear or other damage.

7. All hardware for security of attachment, corrosion, damage, wear and, if applicable, ease of operation.

8. Preservers for stains, dirt, and general cleanliness. Refer to paragraph 15-51 for cleaning instructions.

9. Cross threading and/or loose manifold nuts.

15-43. MARKINGS INSPECTION. To inspect and restore marking, proceed as follows:

Materials Required

Quantity	Description	Reference Number
1	Ink, Marking, Laundry, Black	SPE-92 NIIN 00-161-4229
	-or-	
As Required	Ink, Drawing, Waterproof, Yellow	A-A-59291 NIIN 00-634-6583

1. Compare markings on preserver to those listed in table 15-3.

2. Restore any faded markings.

3. Deleted.

4. Correct any markings which do not agree with the applicable table. Paint out old marking and enter new marking as close to proper position as possible.

15-44. SURVIVAL ITEMS INSPECTION. To inspect survival items, proceed as follows:

1. Inventory items by checking items against table 15-1. Replace any missing or unsatisfactory item.

NOTE

NAVAIR 13-1-6.5, Rescue and Survival Equipment contains detailed information on the inspection of survival items.

2. Inspect all items for damage, spent contents and expired service life. Replace as necessary.

3. Operate items which are not intended for one-time use. Replace as necessary.

Table 15-3. LPU-21D/P and LPU-35/P Life Preserver Markings

Marking	Location	Letter Height
P/N 1957AS102-1 (LPU-21D/P) P/N 1957AS100 (LPU-35/P) (Note 2)	Outside surface of collar delivery tube case	Optional
CASING, LIFE PRESERVER, LPU-21D/P 1957AS104-1 CONTRACT NO. [applicable number] MANUFACTURER [applicable number] DATE OF MANUFACTURE [month and year] SERIAL NO. [applicable number] Cover, Life Preserver, LPU-35/P 1957AS100 (Note 2)	Center of casing waist section (inside)	5/16 inch 3/16 inch
DYE MARKER	Pouch (right side)	1/2 inch
FLARES	Pouch (left side)	1/2 inch

Notes: 1. Replacement markings shall be stamped or stenciled using waterproof black ink.
2. Applies to LPU-21D/P Life Preserver with extension panel modification.

15-45. INFLATION ASSEMBLY INSPECTION. To inspect life preserver inflation assemblies, proceed as follows:

1. Loosen CO_2 cylinder locking screws, if present, and remove CO_2 cylinders from valve assembly.

2. Examine inflation device, actuating lever and lanyard, and locking pins for fraying, corrosion, stripped threads, and other damage.

3. If required, remove any sharp edges from valve with a fine round file.

4. Operate beaded inflation handle three or four times. Ensure that lever moves freely and ensure that piercing pin moves properly inside valve body. Inspect point of piercing pin for serviceability. If point is flat, rounded, dull, or otherwise worn or damaged, replace inflation assembly.

NOTE

Each time inflation assembly gaskets or inflation assembly is removed and replaced for any reason, a functional test shall be conducted. Refer to paragraph 15-37. Use new gaskets when replacing device.

5. If any discrepancy is noted in device that is not repairable in accordance with paragraph 15-59, remove assembly and install a new inflation device.

6. If CO_2 cylinder locking screws are installed, remove them.

15-46. BEADED INFLATION HANDLE PULL TEST. To perform the inflation lanyard pull test, proceed as follows:

Special Equipment Required

Materials Required

Quantity	Description	Reference Number
1	Gage, Dial, Push/Pull, 0 to 50 lb	DPPH50 (CAGE 11710) or equivalent NIIN 00-473-0108

1. Ensure that CO_2 cylinder has been removed. Actuate the inflator assembly. All snap fasteners on beaded inflation handle must be fully engaged.

2. Attach gage to webbing between third and fourth bead on inflation handle.

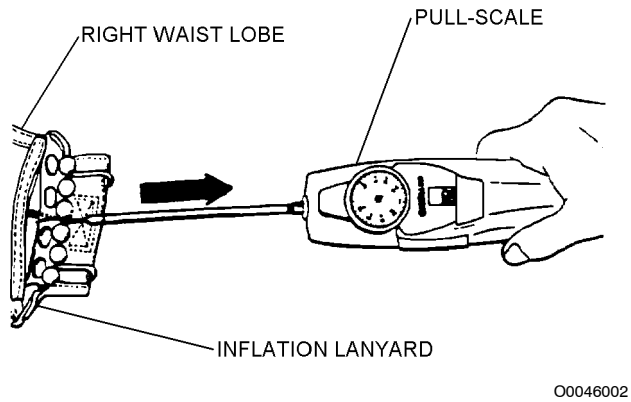

Step 2 - Para 15-46

3. Hold inflator steady. Slowly exert a 25-pound straight pull on webbing. All snap fasteners should release at or before 25 pounds.

4. If all snap fasteners do not release at or before the 25 pound limit, inspect the male and female snap fasteners for damage. Replace the entire beaded inflation handle assembly if required and repeat steps 1 through 4.

5. If the snap fasteners release properly, leave the pull scale attached, once again apply 25 pound force to check the security of the beaded handle attachment to the inflation lanyard. Examine inflation lanyard for frays, ruptures, thin spots, split casing, and security of stitches and knots. If unsatisfactory, replace the entire beaded inflation handle. Refer to paragraph 15-73.

15-47. LEAKAGE TEST. All life preservers shall be subjected to a leakage test each Calendar/Phase Inspection. To perform a leakage test proceed in accordance with paragraph 15-49.

15-48. Test Fixture. A suggested test fixture, consisting of a three-way valve, pressure gage, and adapters for compartments being tested, is shown in Chapter 3. Fixtures must be fabricated to meet the requirements of the schematic shown in figure 15-3.

15-49. Test Procedure. To test life preservers, using test fixture shown in Chapter 3, proceed as follows:

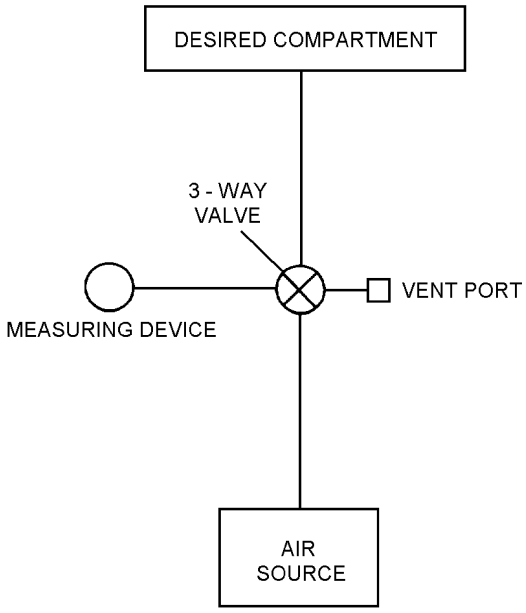

10150003

Figure 15-3. Test Fixture Schematic

CAUTION

Ensure test area is free of foreign objects.

1. Ensure all carbon dioxide has been removed from any preserver which has been functionally tested.

CAUTION

If 3-way valve is not used, measuring device valve must be closed when air feed valve is open.

Damage may occur to oral inflation valve if air supply pressure entering the life preserver exceeds ten (10) psi during this test.

NOTE

If a suitable air source is not available, water-pumped nitrogen (BB-N-411) may be substituted.

2. Unlock oral inflation valve and insert into rubber hose. Rotate valve to air supply position and inflate chamber. Alternately position valve between measuring device, vent and air supply until proper pressure of 2.0 psig is attained in both chambers.

3. The air supply shall be securely shut off and after a minimum of 15 minutes, the pressures shall be readjusted, if necessary, to the leakage test pressure. Record time.

4. Disconnect air supply and check for leaks. Ensure all valves are closed.

5. Record temperature and barometric pressure.

6. After a minimum of 4 hours after completing step 3, record test pressure of both chambers. Test pressure shall not decrease to less than 1.6 psig for a life preserver chamber, from a maximum test pressure of 2.0 psig.

7. Record temperature and barometric pressure and correct test pressure for any changes in temperature and barometric pressure. Refer to tables 15-4 and 15-5.

EXAMPLE

UNCORRECTED TEST READING 1.70 PSI

	TEMP.	BARO.
START	75° F	29.90 IN. Hg
END	70° F	29.70 IN. Hg
DIFFERENCE	- 5° F	-0.20
CORRECTION	+0.155	-0.098

TEMP. CORRECTION	+ 0.155
+ BARO. CORRECTION	- 0.098
CORRECTION	+ 0.057
UNCORRECTED READING	1.700 PSI
+ CORRECTION	+ 0.057
CORRECTED READING	1.757 PSI

00049007

Step 7 - Para 15-49

Table 15-4. Temperature Conversion Chart

Temperature Difference (°F)	Correction (psig)
1	0.031
2	0.062
3	0.093
4	0.124
5	0.155
6	0.186
7	0.217
8	0.248
9	0.279
10	0.310
Rise in temperature: subtract from gage reading. Fall in temperature: add to gage reading.	

8. If pressure of chamber is below 1.6 psig inflate to leakage test pressure and coat with a soap solution to locate leaks. Mark leak areas. Rinse preserver with fresh water, air dry and repair in accordance with paragraph 15-64.

9. Deflate preserver in accordance with paragraph 15-38.

10. Ensure that inflation valve lever is cocked. Install CO_2 cylinder in accordance with paragraph 15-55.

15-50. RECORDS UPDATING. Make necessary entries on appropriate form in accordance with OPNAVINST 4790.2 Series.

15-51. CLEANING AND SERVICING.

15-52. Cleaning and servicing consist of cleaning the life preserver, case, container and/or pouch, installation of the inflation valve protective covers and CO_2 cylinders and, when required, safety wiring of the inflation valve actuating lever.

15-53. CLEANING OF LIFE PRESERVER CASINGS/BLADDERS. To clean life preservers, machine washing is preferred on casings, containers, and pouches. Alternate method is by hand. Remove any survival items and other detachable items and proceed as follows:

Table 15-5. Barometric Pressure Conversion Chart

Press. Diff. (inHG)	Corr. (psi)	Press. Diff. (inHG)	Corr. (psi)	Press. Diff. (inHG)	Corr. (psi)	Press. Diff. (inHG)	Corr. (psi)	Press. Diff. (inHG)	Corr. (psi)
0.01	0.005	0.16	0.078	0.31	0.152	0.46	0.225	0.61	0.299
0.02	0.010	0.17	0.083	0.32	0.157	0.47	0.230	0.62	0.304
0.03	0.015	0.18	0.088	0.33	0.162	0.48	0.235	0.63	0.309
0.04	0.020	0.19	0.093	0.34	0.167	0.49	0.240	0.64	0.314
0.05	0.025	0.20	0.098	0.35	0.172	0.50	0.245	0.65	0.319
0.06	0.030	0.21	0.103	0.36	0.176	0.51	0.250	0.66	0.323
0.07	0.035	0.22	0.108	0.37	0.181	0.52	0.254	0.67	0.328
0.08	0.040	0.23	0.113	0.38	0.186	0.53	0.260	0.68	0.333
0.09	0.045	0.24	0.118	0.39	0.191	0.54	0.265	0.69	0.338
0.10	0.049	0.25	0.123	0.40	0.196	0.55	0.270	0.70	0.343
0.11	0.054	0.26	0.127	0.41	0.201	0.56	0.275	0.71	0.348
0.12	0.060	0.27	0.132	0.42	0.206	0.57	0.279	0.72	0.353
0.13	0.064	0.28	0.137	0.43	0.211	0.58	0.284	0.73	0.358
0.14	0.069	0.29	0.142	0.44	0.216	0.59	0.289	0.74	0.363
0.15	0.073	0.30	0.147	0.45	0.221	0.60	0.294	0.75	0.368
Rise in pressure: add to gage reading. Fall in pressure: subtract from gage reading.									

Materials Required

Quantity	Description	Reference Number
As Required	Detergent, General Purpose	MIL-D-16791 NIIN 00-282-9699
As Required	Cloth, Lint-Free, Type II	MIL-C-85043 NIIN 00-044-9281
As Required	Talc, Technical	MIL-T-50036A NIIN 01-080-9589

CAUTION

Solvents are not to be used in cleaning life preservers.

1. Prepare solution of detergent (MIL-D-16791) consisting of 1/4 to 1/2 ounce of detergent per gallon of water.

2. Apply cleaning solution to soiled area with a spray or sponge.

3. Allow solution to remain on surface for several minutes, then agitate with a soft brush or rag.

4. Rinse surface thoroughly with water; wipe with a cloth or sponge. Repeat this application until surface is free from all solution.

5. Dry casing before use and dry bladder with a lint-free cloth (MIL-C-85043). Apply a light coating of talc (MIL-T-50036A).

15-54. INSTALLATION OF INFLATION VALVE PROTECTIVE COVERS. To install inflation valve protective covers, proceed as follows:

1. Open life preserver flotation assembly, then position on a flat surface.

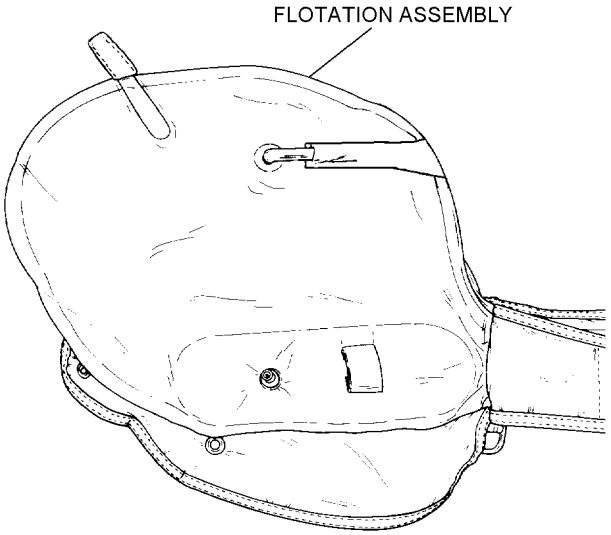

O0054001

Step 1 - Para 15-54

2. Place inflation valve protective cover upon the life preserver. Ensure that inlet manifold stem hole and CO_2 cylinder holding loop hole are aligned according to figure 15-4.

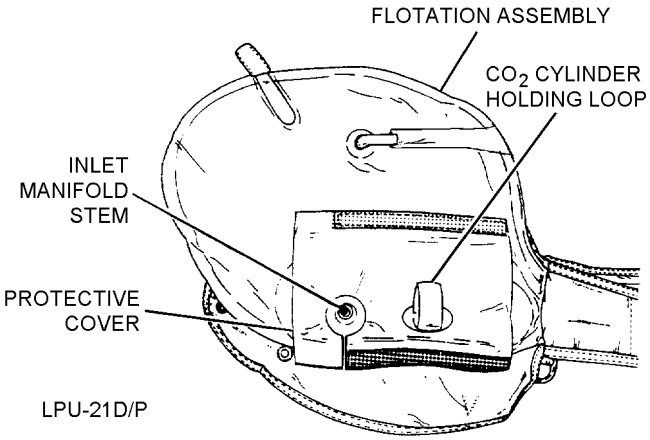

10150004

Figure 15-4. Installation of Inflation Valve Protective Cover

15-55. INSTALLATION OF CO_2 CYLINDERS. To install CO_2 cylinders, proceed as follows:

Support Equipment Required

Quantity	Description	Reference Number
1	Scale (Gram)	A-A-52021-1 NIIN 00-514-4117 or equivalent
1	Die, Cylinder Thread Chaser	1842-008-01 (CAGE 03688) NIIN 00-069-4040

Materials Required

Quantity	Description	Reference Number
1	Valve Stem and Seat Seal Kit (Note 1)	105AS100-5 (CAGE 30003) NIIN 00-498-6964
As Required	Cylinder, CO_2 Type III, 35-Gram	MIL-C-25369C NIIN 01-077-8773

Notes: 1. Seat Seal is obtained from Valve Stem and Seat Seal Kit, P/N 105AS100-5, NIIN 00-498-6964, which contains two top, two bottom, and two seat seal gaskets.

NOTE

Weight of charged cylinder will vary according to manufacturer.

1. Weigh a charged cylinder and compare the minimum stamped weight with the scale weight. Discard and replace cylinder if scale weight is 2 grams less than minimum stamped weight.

2. Each inflation assembly consists of an inflator (MIL-I-25370, Type II, NIIN 00-561-0094), and a CO_2 cylinder (MIL-C-25369C, Type III, 34 to 37 grams, NIIN 01-077-8773).

3. Remove and discard inflator setscrew(s) if installed. Ensure that inflator lever is in a cocked position.

4. To assure a firm cylinder seat, conduct a cylinder thread count. Threaded portion of cylinder neck shall contain a minimum of seven full threads to assure a firm cylinder seat within valve body. Any cylinder found with less than seven full threads shall be discarded. See figure 15-5.

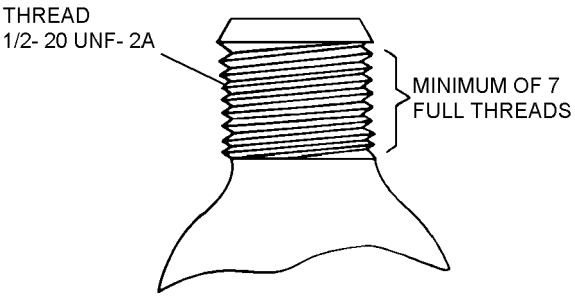

10150005

Figure 15-5. Cylinder Thread Count

CAUTION

Steel threads on CO_2 cylinder can cause damage to aluminum threads on inflator if cylinder is not carefully threaded. If binding occurs during installation of cylinder, use thread chaser dye on cylinder thread to cut free excessive plating. Reinstall cylinder. If binding still occurs, replace cylinder.

5. After performing functional test, insert a new seat seal gasket. At intermediate inspection intervals, inspect condition of gasket and replace if necessary.

6. Install CO_2 cylinder into inflator body as far as hand twisting will permit.

NOTE

When replacing CO_2 cylinder to inflator, ensure that CO_2 cylinder passes through the holding patch loop.

Do not install setscrews in LPU-21D/P life preservers.

7. Close inflation valve protective covers; then secure with hook and pile tape provided. See figure 15-4.

15-56. REPAIR/REPLACEMENT.

15-57. This section contains instructions for the repair or modification of various components or subassemblies of life preservers to ensure that appropriate items of equipment remain in Ready For Issue (RFI) status. Reference numbers for parts which are defective, corroded or worn and require replacement are included in the applicable paragraph of this section. Other replacement parts, such as carrying cases and personal survival equipment, are listed in the applicable table of each chapter. Procedures are applicable to the type life preserver described in parentheses following the title of the repair or modification, or before a step. Common repairs and fabrication instructions to maintain serviceability are listed in table 15-6.

Table 15-6. LPU-21D/P Common Repairs and Fabrications

Description of Repair or Fabrication	Paragraph Number
Determination of Repairability	15-59
Casing Repair Procedures	15-61
Casing Grommet Replacement Procedures	15-62
Cementing Life Preservers	15-63
Patching Life Preservers	15-64
Replacement of Oral Inflation Valve	15-66
Recementing of Bladder Fin Seams	15-67
Fabrication of Slip-On Pockets For Life Preserver Hardware	15-68
Replacement of Flare and Dye Marker Pouch Snaphooks	15-69
Flare Pouch Repair	15-70
Disassembly of the Life Preserver	15-71
Reassembly of Life Preserver	15-72
Replacement of Beaded Inflation Handle Assembly	15-73
Repair of Corroded CO_2 Inflation Valve	15-74
Replacement of Top and Bottom Gaskets	15-75
Replacement of Check Valve Assembly	15-76
Fabrication of Protective Cover Assembly	15-77
Addition of Collar Lobe Webbing Loops	15-78
Fabrication and Installation of Waist lobe Attachment Patch	15-79
Fabrication and Installation of Locking Pin Cover (No. 3 Spur Grommet)	15-82
Fabrication of 6-inch Extension Panel for Casing Assembly	15-82A
Replacement of Collar Lobe Uni-Directional Snap Fasteners and Webbing	15-83
Replacement of Flotation Bladder Collar Lobe Uni-Directional Snap Fastener Stud	15-84

15-58. Replacement of easily removed assembly components such as CO_2 inflation valves and survival items are authorized in addition to repair and replacement procedures documented in this section. The life preserver shall be subjected to a functional and leakage test each time CO_2 inflation valves are removed and replaced for any reason, and each time inflation valve gaskets are replaced.

15-59. DETERMINATION OF REPAIRABILITY. Patching of holes, cuts, tears or punctures 1-inch square or less are the only repairs authorized in a life preserver bladder.

15-60. Life preserver shall be considered beyond repair for any of the following reasons:

1. Porous fabric areas on flotation bladder.

2. Split or open bladder seams.

3. Leakage test failure resulting from other than repairable cut, tear or puncture.

4. Holes, cuts, tears or punctures within 1-inch of flotation bladder seams.

5. Deterioration of the rubberized fabric caused by oil, grease, or any other foreign substance.

6. Deterioration of the rubberized fabric caused by a heavily mildewed condition.

15-61. CASING REPAIR PROCEDURES. To repair casings, proceed as follows:

Materials Required

Quantity	Description	Reference Number
As Required	Thread, Nylon, High Temperature Resistant, Sage Green	MIL-T-83193 NIIN 00-405-2252
	-or-	
As Required	Thread, Nylon, Type II, Size E, Sage Green	V-T-295 NIIN 00-204-3884
As Required	Cloth, Aramid, Non-melting, Type 456, Class I, Sage Green	MIL-C-83429 NIIN 01-147-2068

Materials Required (Cont)

Quantity	Description	Reference Number
As Required	Tape, Hook, Sage Green, Type II	MIL-F-21840 NIIN 00-405-2266
As Required	Tape, Pile, Sage Green, Type II	MIL-F-21840 NIIN 00-405-2263

1. Minor holes, rips, tears, or abrasions in casing assembly may be repaired if they do not exceed 2 inches.

2. Repair or replace loose or damaged hook and pile tape as required.

3. Remove bladder in areas being repaired.

4. For all repairs plus loose or broken stitching use 6 to 8 stitches per inch and back stitch one half inch.

5. Casing assembly worn beyond economical repair shall be discarded.

15-62. CASING GROMMET REPLACEMENT PROCEDURES. To replace casing grommet, proceed as follows:

Support Equipment Required

Quantity	Description	Reference Number
1	Punch, Cutting, 3/16″	3GGG-P-833 NIIN 00-180-0941
1	Pencil, Solder	W-S-570 NIIN 00-204-3855

Materials Required

Quantity	Description	Reference Number
1	Tape, Nylon, Sage Green, 1″ Wide	MIL-T-5038 NIIN 00-753-6144
	-or-	
1 1/2″ X 1 1/2″	Cloth, Aramid, Sage Green, Type 456, Class I	MIL-C-83429 NIIN 01-147-2064
2	Grommet, Brass, Size 00	MS20230B20 NIIN 00-291-0302

THIS PAGE INTENTIONALLY LEFT BLANK.

1. Remove bladder in areas being repaired.

2. Remove loose grommet.

3. Reinforce worn grommet hole in casing by using either nylon tape or aramid cloth.

a. Prepare reinforcing material.

(1) Cut and sear edges of a 1-inch piece of nylon tape.

or

(2) Cut a 1 1/2 x 1 1/2-inch piece of aramid cloth and fold under 1/4 inch on all edges.

b. Sew reinforcing material to outside of casing, centered where possible over original grommet location. Use a cross boxstitch with 6 to 8 stitches per inch, 1/8 inch from edge.

4. Install new grommet.

a. Locate original grommet hole. Cut hole in reinforcing material using 3/16-inch cutting punch.

b. (For nylon tape only.) Carefully sear hole to prevent fraying using solder pencil.

c. Install grommet and washer using 00 grommet setter and base.

15-63. CEMENTING LIFE PRESERVERS. All cementing of life preservers shall be performed as follows:

Support Equipment Required

Quantity	Description	Reference Number
1	Roller, Wooden	GGG-R-00620 NIIN 00-243-9401
1	Brush, Disposable	NIIN 00-514-2417

Materials Required

Quantity	Description	Reference Number
As Required	Toluene	TT-T-548 NIIN 00-281-2002
	-or-	
As Required	Methyl Ethyl Ketone (MEK)	TT-M-261 NIIN 00-281-2762
As Required	Adhesive, Polyurethane (Note 1)	MIL-A-47315 P/N UR-1092 NIIN 01-375-7855
As Required	Talc, Technical	MIL-T-50036A NIIN 01-089-9589

Notes: 1. Polyurethane adhesive (UR-1092) may be open purchased from the following source (minimum order $150.00):
Clifton Adhesives Inc.
Burgess Place
Wayne, NJ 07473
201-694-0845

WARNING

Do not use toluene or MEK near open flame, heat or electrical sparks. Avoid prolonged contact with skin or breathing of fumes. Use only in a well ventilated area.

CAUTION

Use only polyurethane adhesive on heat sealed polyurethane-coated cloth of LPU-21D/P life preserver assemblies.

NOTE

Toluene shall be the primary solvent used in the fabrication or repair of this assembly. MEK may be used if toluene is not available. Always use sparingly and wipe up excess solvents; do not allow to dry by evaporation.

Toluene or MEK must be applied vigorously to life preserver material over three years old in order to reactivate the material prior to cementing. Pigment from the material coloring staining a cloth rubbed over the treated surface will indicate the material has been reactivated. Cement shall be applied immediately after the surface has dried.

1. Clean both surfaces to be cemented with four applications of toluene or MEK. Apply toluene or MEK with back-and-forth strokes on the first and third applications, and one-way strokes on the second and fourth applications. Allow area to dry between applications.

CAUTION

The effective active period of adhesive mixture composed of polyurethane and an accelerator is eight (8) hours. Do not use mixture if older than eight hours.

2. Prepare only enough mixture for 8 hours. Dispose of any remaining mixture.

3. Using a disposable brush, apply cement to completely cover surfaces to be cemented. Use long, one direction strokes and complete each surface before cement becomes tacky as the brush may pull tacky cement from the surface. Allow to dry for 10 minutes.

4. Apply a second coat of cement as in step 3. Use brush strokes perpendicular to the original direction.

5. When second coat of cement has become tacky, place pieces together. If cemented area has a cut or tear, butt edges of damage before applying patch. Roll out bubbles with a wooden roller.

6. Allow cement to cure a minimum of 48 hours.

7. Dust area with talc (MIL-T-50036A).

15-64. PATCHING LIFE PRESERVERS. Patching of life preserver shall be performed as follows:

NOTE

Life preserver is not repairable if it has holes, cuts, tears, or punctures over one-inch square.

Materials Required

Quantity	Description	Reference Number
As Required	Cloth, Nylon, Polyurethane Coated, Type I	MIL-C-83489 NIIN 01-335-3129

CAUTION

Only polyurethane adhesives and polyurethane-coated cloth patches shall be used on polyurethane-coated LPU-21D/P life preserver assemblies.

NOTE

Select patch color as near as possible to color of life preserver being repaired.

Use of cloth from BCM raft/life preservers is authorized for repair, with two exceptions. Inflatables condemned for contamination (oil, grease, etc.) and ALSS equipment involved in mishaps shall not be used for repairs.

1. Cut a rounded patch 1 inch larger than damage on all sides.

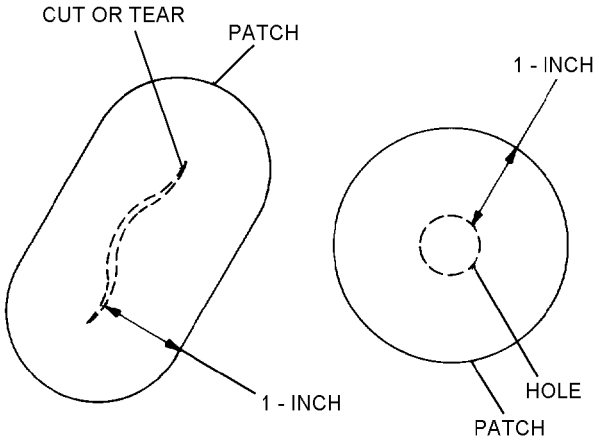

O0064001

Step 1 - Para 15-64

2. Center patch over damage and trace an outline of patch on fabric.

3. Cement patch to damaged area in accordance with paragraph 15-63.

4. Dust area with talc (MIL-T-50036A).

5. Perform a leakage test.

15-65. INSPECTION RECORD PATCH.

NOTE

The 28th In-Service Management Panel meeting for Aviation Life Support Systems rescinded the requirement for the packer to sign the Inspection Record Patch on life preservers. The requirement for all other documentation remains unchanged. The reason for this change is that most history patches are unreadable and the packer's and inspector's names are documented on Aviation Crew Systems Records.

15-66. REPLACEMENT OF ORAL INFLATION VALVE. To replace the oral inflation valve, proceed as follows:

NOTE

Replacement oral inflation valves can only be obtained through salvage of BCM'ed or surveyed inflatable survival equipment.

Materials Required

Quantity	Description	Reference Number
1	Valve, Oral Inflation	—
As Required	Cement, Polychloroprene	MIL-A-5540 NIIN 00-142-9913
As Required	Brush, Disposable	NIIN 00-514-2417
As Required	Toluene	TT-T-548 NIIN 00-281-2002
	-or-	
As Required	Methyl Ethyl Ketone (MEK)	TT-M-261 NIIN 00-281-2762

CAUTION

Only toluene or MEK shall be used to clean oral inflation valve and tube. Only Polychloroprene cement (MIL-A-5540, NIIN 00-142-9913) shall be used to cement oral inflation valve into oral inflation tube.

1. Carefully cut through metal clamp securing oral inflation valve to oral inflation tube and remove metal band and oral inflation valve.

2. If the tip of the oral inflation tube was damaged during removal of valve, trim off damaged section.

3. Clean both surfaces to be cemented with toluene or MEK. Allow areas to dry.

4. Using a small disposable brush, carefully apply a small amount of Polychloroprene cement to the surfaces of the tube and the valve which are to be cemented together.

5. Immediately place oral inflation valve into oral inflation tube. Oral inflation valve should be inserted up to valve shoulder. Inspect for proper application/cement.

6. Tightly wrap the cemented portion of the oral inflation tube with cord or wire and allow to cure for 48 hours before removing wrap.

7. Perform leakage test in accordance with paragraph 15-47.

15-67. RECEMENTING OF BLADDER FIN SEAMS. Recementing of seams is not authorized.

CAUTION

Recementing of fin seams is not authorized for heat sealed LPU-21D/P Life Preservers.

1. Dispose of LPU-21D/P flotation assembly after usable parts have been salvaged.

Figure 15-6 Deleted.

THIS PAGE INTENTIONALLY LEFT BLANK.

15-68. FABRICATION OF SLIP-ON POCKETS FOR LIFE PRESERVER HARDWARE. To fabricate slip-on pockets life preserver hardware, proceed as follows:

Materials Required

Quantity	Description	Reference Number
As Required	Cloth, Nylon, Polyurethane-coated, Type I	MIL-C-83489 NIIN 01-335-3129
As Required	Thread, Nylon Size E	V-T-295 NIIN 00-204-3884

1. Cut two pieces of coated nylon cloth as shown.

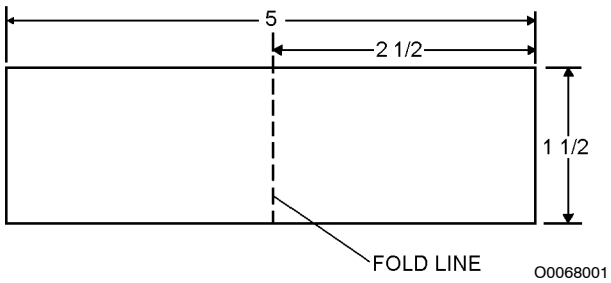

Step 1 - Para 15-68

2. Fold piece of cloth in half along fold line.

3. Sew two sides adjacent to fold forming a pocket. Use stitch type 301 stitching 8 to 10 stitches per inch.

4. Repeat steps 2 and 3 for other piece of cloth.

5. When packing life preserver, slip pockets over applicable pieces of hardware.

15-69. REPLACEMENT OF FLARE AND DYE MARKER POUCH SNAPHOOKS. To replace a broken snaphook, proceed as follows:

Materials Required

Quantity	Description	Reference Number
12 inches	Cord, Nylon, Type I	MIL-C-5040 NIIN 00-240-2154

1. Cut through ring portion of snaphook.

2. Remove snaphook and discard.

3. Pass end of cord through webbing loops on pouch and preserver ring.

4. Secure cord ends with binder knot, cut excess cord, and sear ends.

15-70. FLARE POUCH REPAIR. To repair flare pouch which will not close or is extremely difficult to close with flares installed, proceed as follows:

Materials Required

Quantity	Description	Reference Number
As Required	Thread, Nylon, Size E	V-T-295 NIIN 00-204-3884
2	Socket, Snap Fastener	MS27983-2 NIIN 00-945-2577
2	Cap, Snap Fastener	MS27983-1 NIIN 00-891-9073
3 1/2 inches	Webbing, Type VIII	MIL-W-4008

1. Remove both sets of sockets, caps, and pull tabs from pouch closure flap. Save pull tabs.

2. Position MIL-W-4008 Type VIII webbing on outside surface of pouch flap. Cut and sear webbing ends to match contour of flap end. Boxstitch webbing to flap using size E nylon thread (V-T-295). See figure 15-7.

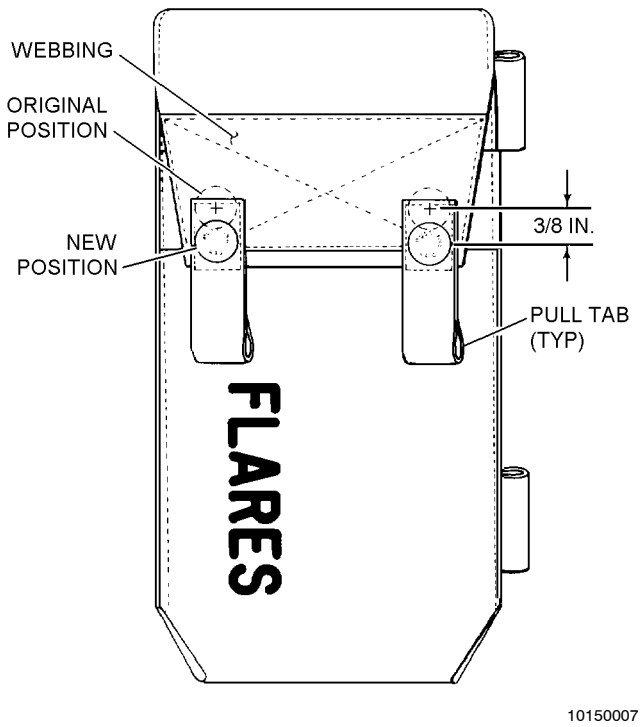

Figure 15-7. Flare Pouch Repair

3. Reposition both sets of sockets, caps, and pull tabs 3/8 inch closer to flap end. Use original pull tabs.

15-71. DISASSEMBLY OF THE LIFE PRESERVER. To disassemble the life preserver for bladder or case repairs, proceed as follows:

NOTE

Life preserver shall be disassembled only to the extent necessary to perform required maintenance or inspection.

The uni-directional snap fastener socket is installed with the dot on its button oriented to the side of the fastener on which lift must be applied to disengage socket from the snap fastener stud.

1. Disengage uni-directional snap fasteners securing waist lobes to casing by applying lift on the dot-side snap fastener buttons.

2. Disengage collar lobe from casing by inserting finger under casing between the two uni-directional snap fastener buttons and apply lift.

3. Open casing and remove both inflation assemblies.

4. Reattach cap nuts to valve stems.

5. Release all hook and pile tape fasteners.

6. Fold collar lobe and waist lobes to width of casing.

7. Hold casing at collar and pull flotation assembly down and out of casing, one lobe at a time.

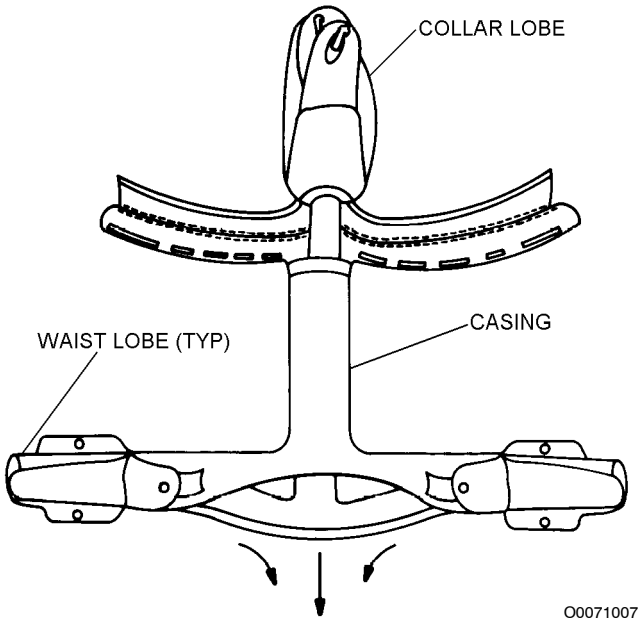

Step 7 - Para 15-71

15-72. REASSEMBLY OF THE LIFE PRESERVER. To reassemble the life preserver proceed as follows:

Materials Required

Quantity	Description	Reference Number
1	Valve Stem and Seat Seal Kit (Note 1)	105AS100-5 (CAGE 30003) NIIN 00-498-6964

Notes: 1. Valve Stem and Seat Seal Kit, P/N 105AS100-5, NIIN 00-498-6964, contains two top, two bottom, and two seat seal gaskets.

NOTE

The quantity of materials listed is sufficient for reassembly of one life preserver.

CAUTION

Ensure flotation assembly is not twisted in casing channels.

1. Roll collar lobes of flotation assembly together to form compact rod-like configuration and insert into base of back channel of casing. While holding lobes in roll configuration, work them through casing back channel. Next, insert waist lobes through casing waist channels.

2. When flotation assembly is in casing assembly, ensure that it is in proper configuration and is not twisted inside casing.

3. Align uni-directional snap fastener studs on each collar lobe with snap fastener sockets of casing assembly and secure snap fasteners.

NOTE

For ease of operation, insert one side of snap fastener stud into the socket on the side opposite the dot on the button, and press to engage.

4. Align uni-directional snap fastener sockets of flotation assembly waist lobe attachment patch with snap fastener studs of casing assembly and secure waist lobes to casing assembly.

5. Remove old inflation gaskets and replace with new gaskets. Reinstall inflation assemblies and protective covers. Pack life preserver in accordance with paragraph 15-85.

15-73. REPLACEMENT OF BEADED INFLATION HANDLE ASSEMBLY. To replace the beaded inflation handle, proceed as follows:

Materials Required

Quantity	Description	Reference Number
As Required	Handle, Beaded, Inflation	975AS121-11 NIIN 01-120-4752 (CAGE 30003)
As Required	Thread, Nylon, Size E	V-T-295 NIIN 00-204-3884

1. Open snap fastener on locking pin cover; then cut and remove safety tie securing eye of locking pin to retaining loop. Carefully remove locking pin from pin keeper and retaining loop.

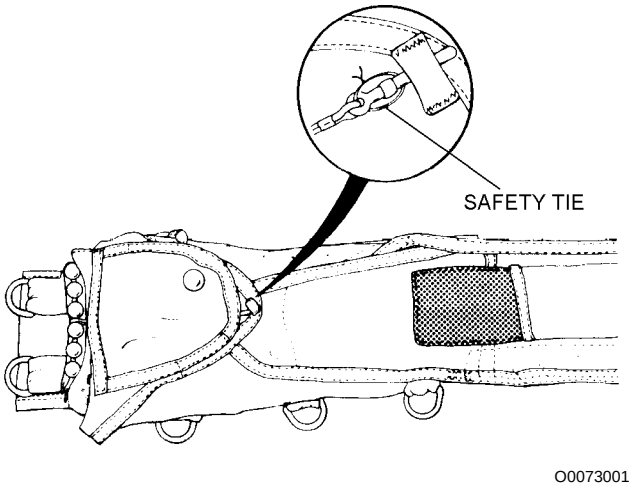

Step 1 - Para 15-73

2. Open flaps and unfold life preserver assembly.

3. Remove CO_2 cylinder from CO_2 inflator assembly. Retain CO_2 cylinder for reinstallation.

4. Remove inflation lanyard from inflator assembly; then unsnap beaded inflation handle from life preserver casing.

5. Secure new beaded handle inflation lanyard to actuating lever by passing lanyard through grommet in bottom casing flap and through hole in end of actuating lever. Pass lanyard back through grommet in bottom casing flap and form lark's head knot.

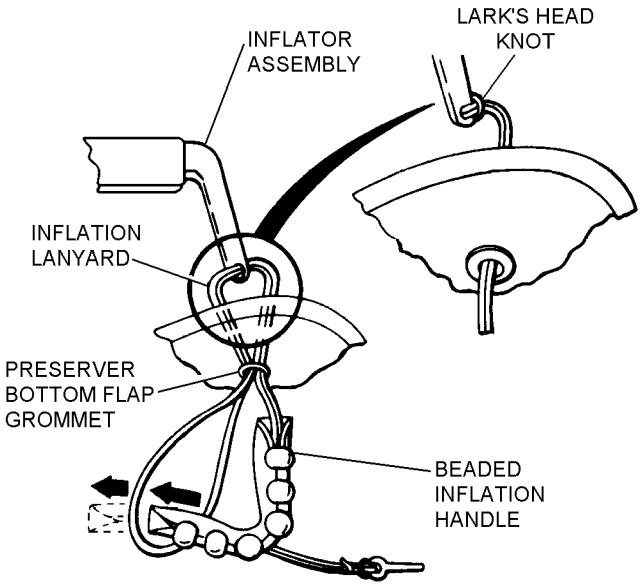

O0073005

Step 5 - Para 15-73

6. Fasten beaded inflation handle to casing with snap fasteners provided; then safety-tie beaded inflation handle with one turn of size E nylon thread, single. Draw thread sufficiently to permit 1/2-inch æ 1/8-inch space between the middle beads and webbing on the preserver. Tie ends of both safety ties with a surgeon's knot followed by a square knot.

NOTE

Ensure that overhand knot on locking pin lanyard is within 3/4 inch from eye of pin.

7. Route locking pin under outboard flap cover panel and through No. 3 spur grommet.

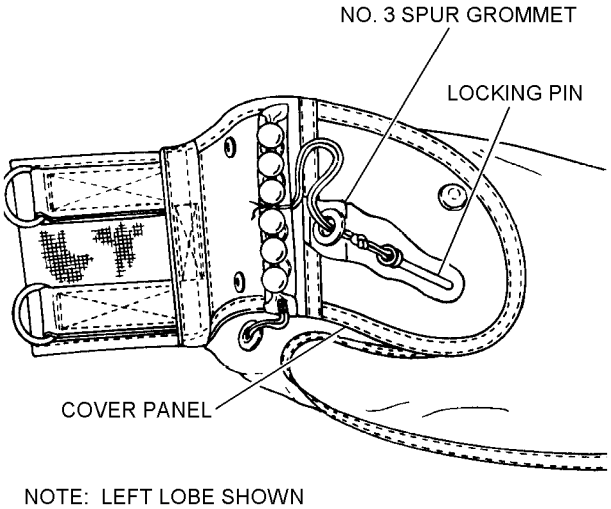

O0073007

Step 7 - Para 15-73

NOTE

On some late issue LPU-21D/P life preservers, the No. 3 spur grommet has been deleted.

8. Route the locking pin under the locking pin cover flap through the opening in the stitching at the base of the flap, through the retaining loop/packaging cord loop, and under the pin keeper loop.

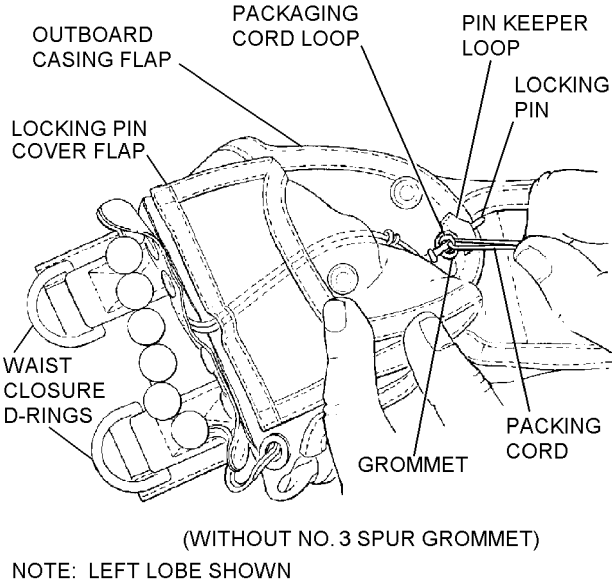

O0073008

Step 8 - Para 15-73

9. Perform beaded inflation handle pull test. Refer to paragraph 15-46.

10. Recock CO_2 inflator and install CO_2 cylinder.

NOTE

Ensure that all hook and pile tapes are securely mated.

11. Pack life preserver according to procedures outlined in paragraph 15-85.

12. Make necessary entries on appropriate form in accordance with OPNAVINST 4790.2 Series.

15-74. REPAIR OF CORRODED CO_2 INFLATION VALVE MIL-I-25370, TYPE II (NON-EJECTION A/C). To repair CO_2 inflation valve, proceed as follows:

Materials Required

Quantity	Description	Reference Number
As Required	Lubricant, Silicone	DC7 (CAGE 71984) NIIN 00-995-0712
1	Valve Stem and Seat Seal Kit (Note 1)	105AS100-5 (CAGE 30003) NIIN 00-498-6964
As Required	Cloth, Emery No. 240	—
1	Valve, Inflation, Type II	MIL-I-25370 NIIN 00-561-0094
As required	Abrasive Mat	MIL-A-9962 NIIN 00-967-5093
As Required	Corrosion Preventative Compound (Amiguard) Type I	MIL-C-85054 NIIN 01-041-1596

Notes: 1. Valve Stem and Seat Seal Kit, P/N 105AS100-5, NIIN 00-498-6964, contains two top, two bottom, and two seat seal gaskets.

1. Remove CO_2 cylinder from valve.

2. Remove inflation valve from preserver. Discard two gaskets on valve stem. Remove CO_2 cylinder from valve.

3. Remove grooved taper pin (retaining lever) from inflation valve, using awl and mallet. See figure 15-8.

4. Remove lever, spring, and piercing pin. If spring is broken or corroded, replace entire valve.

5. If piercing pin or actuating lever is corroded, remove corrosion with abrasive mat. If abrasive mat is ineffective, use 240 grit emery cloth. Do not damage O-ring on piercing pin. Wipe off any dirt or moisture from actuating lever and apply a thin coat of MIL-C-85054 and allow to dry.

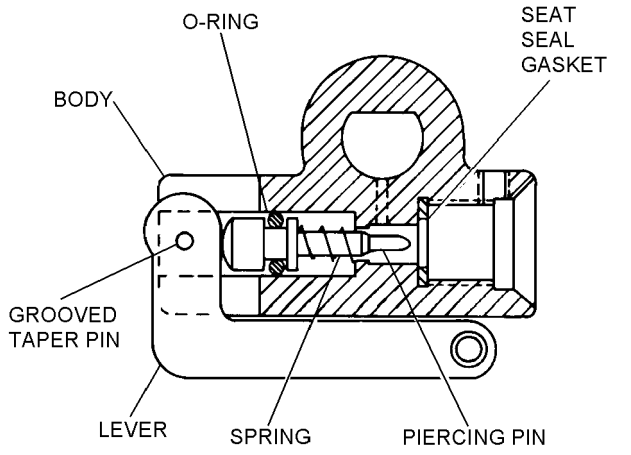

Figure 15-8. CO_2 Inflation Assembly

6. Clean residue from actuating lever on piercing pin. Lightly coat base of piercing pin with silicone lubricant.

7. Reassemble inflation valve and operate actuating lever three or four times. Ensure that lever and piercing pin move freely.

8. If piercing pin and lever do not move freely, obtain replacement valve.

9. Reinstall inflation valve on life preserver using new gaskets from kit. Reinstall new seat seal gasket and CO_2 cylinder.

CAUTION

Valve stem may rotate if cap nut is over torqued.

10. Install cap nut onto valve stem and torque to a value of 8 ±1 in-lb.

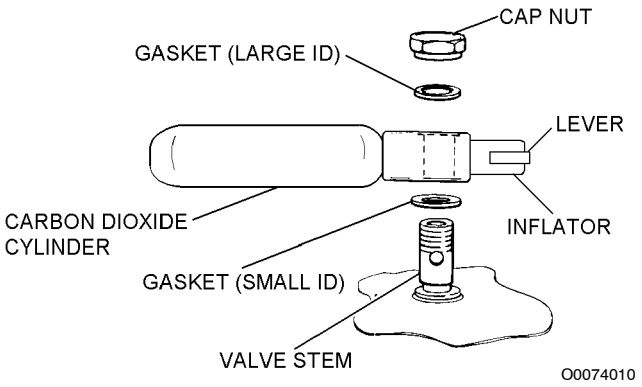

Step 10 - Para 15-74

15-75. REPLACEMENT OF TOP AND BOTTOM GASKETS. To replace the top and bottom gaskets on an inflator, proceed as follows:

Support Equipment Required

Quantity	Description	Reference Number
1	Wrench, 9/16 inch	—

Materials Required

Quantity	Description	Reference Number
1	Valve Stem and Seat Seal Kit (Note 1)	105AS100-5 (CAGE 30003) NIIN 00-498-6964

Notes: 1. Valve Stem and Seat Seal Kit, P/N 105AS100-5, NIIN 00-498-6964, contains two top, two bottom, and two seat seal gaskets.

1. Remove cap nut and top gasket from inflator.

WARNING

Ensure that gaskets are properly positioned. The top gasket has a larger internal diameter than the bottom gasket.

2. Remove inflator and replace bottom gasket.

3. Carefully place inflator onto valve stem.

4. Install top gasket onto valve stem.

CAUTION

Valve stem may rotate if cap nut is over torqued.

5. Tighten cap nut onto valve stem and torque to a value of 8 ±1 in-lb.

6. Perform functional and leakage tests on life preserver cell that was repaired. Refer to paragraphs 15-37 and 15-47.

15-76. REPLACEMENT OF CHECK VALVE ASSEMBLY. To replace a defective check valve assembly, proceed as follows:

Materials Required

Quantity	Description	Reference Number
1	Valve, Pneumatic Inflator (Check Valve Assembly) (Note 1)	Schrader-Bridgeport P/N 8457500047

Notes: 1. Schrader-Bridgeport P/N 8457500047 must be open purchased from:
Schrader-Bridgeport Intl
205 Frazier Rd
P.O. Box 668
Altivista, VA 24517
Phone (804) 369-8875

Support Equipment Required

Quantity	Description	Reference Number
1	Tool, Valve Core	8769A or equivalent (CAGE 27783) NIIN 01-354-5423
1	Wrench, Torque	—

1. If not available, fabricate a valve core tool as shown in Chapter 3.

2. Remove inflator cap nut.

3. Insert valve core tool and unscrew check valve from valve stem.

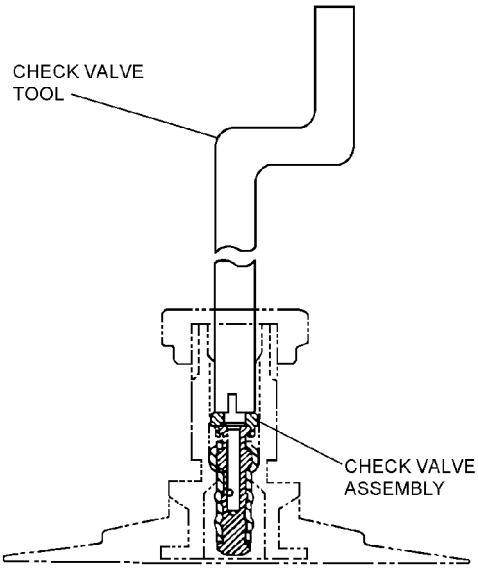

Step 3 - Para 15-76

4. Insert new check valve in valve stem and tighten with valve core tool hand tight.

CAUTION

Valve stem may rotate if cap nut is over torqued.

5. Replace cap nut and torque to a value of 8 ±1 in-lb.

6. Perform a functional and leakage test on life preserver cell that was repaired. Refer to paragraphs 15-37 and 15-47.

15-77. FABRICATION OF PROTECTIVE COVER ASSEMBLY. To fabricate a protective cover, proceed as follows:

Materials Required

Quantity	Description	Reference Number
17 x 6 inches	Cloth, Nylon, Polyurethane-coated, Type I	MIL-C-83489 NIIN 01-335-3129
12 x 5/8 inches	Fastener, Tape, Hook, Type II	MIL-F-21840
12 x 5/8 inches	Fastener, Tape, Pile, Type II	MIL-F-21840
As Required	Thread, Nylon, Type I or II, Size E	V-T-295 NIIN 00-204-3884

NOTE

Procedural step 1 is for a right protective cover and step 2 is for a left protective cover.

1. To fabricate a right protective cover, proceed as follows:

a. Cut an 8 1/2-inch length of cloth.

b. Cut a 6-inch length of hook and pile tape and sew to the coated side of the cloth. Use stitch type 301 stitching 8 to 10 stitches per inch.

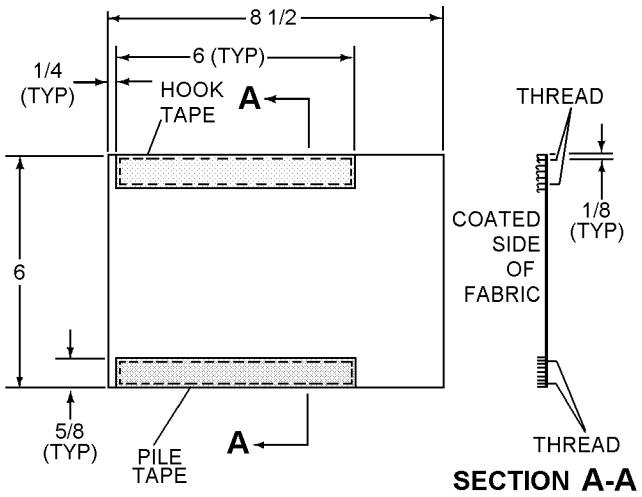

Step 1b - Para 15-77

c. Position coated, coated side up, over cutting board and punch a 1 7/16-inch diameter hole and a 1-inch diameter hole.

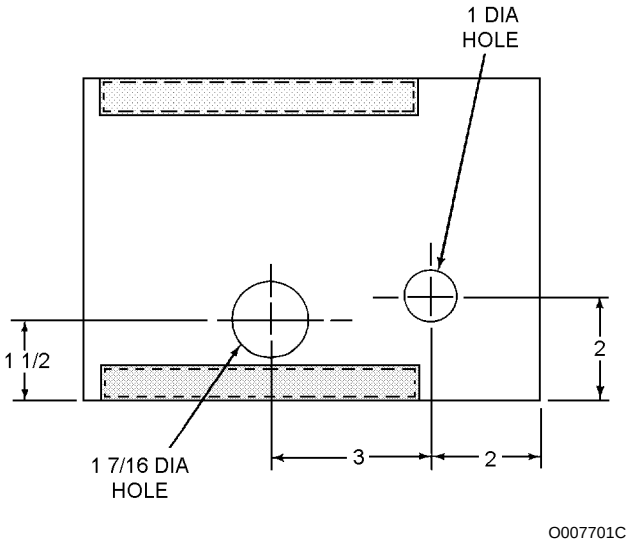

Step 1c - Para 15-77

d. Cut slit into cloth up to the 1-inch diameter hole.

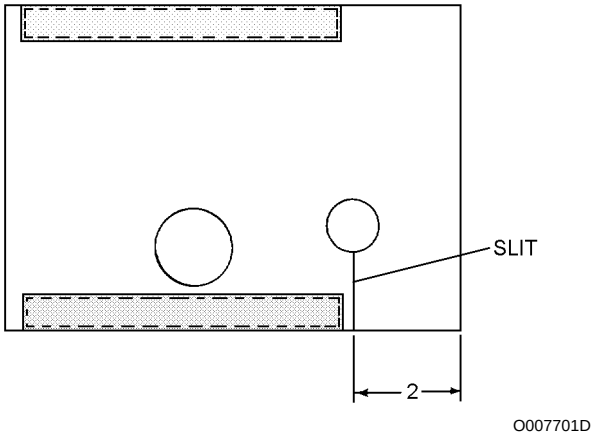

Step 1d - Para 15-77

2. To fabricate a left protective cover, proceed as follows:

a. Cut an 8 1/2-inch length of cloth.

b. Cut a 6-inch length of hook and pile tape and sew to the coated side of the cloth.

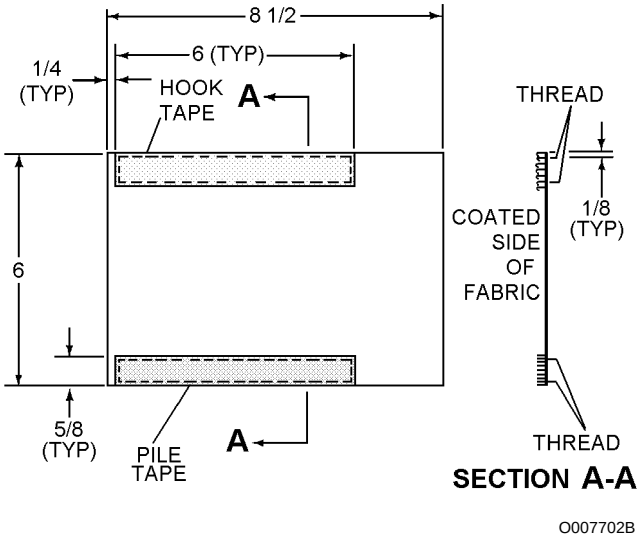

Step 2b - Para 15-77

c. Position cloth, coated side up, over cutting board and punch a 1 7/16-inch diameter hole and a 1-inch diameter hole.

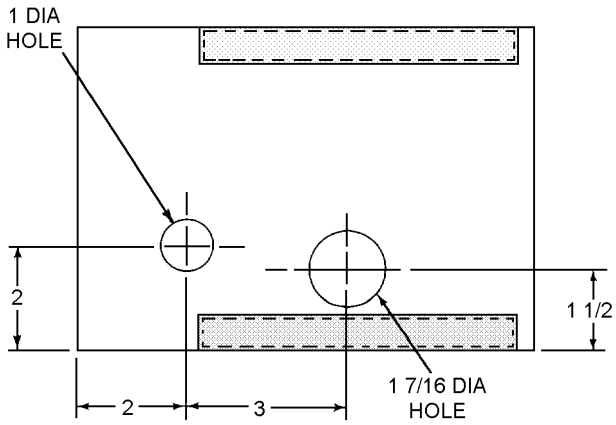

O007702C

Step 2c - Para 15-77

d. Cut slit into cloth up to the 1-inch diameter hole.

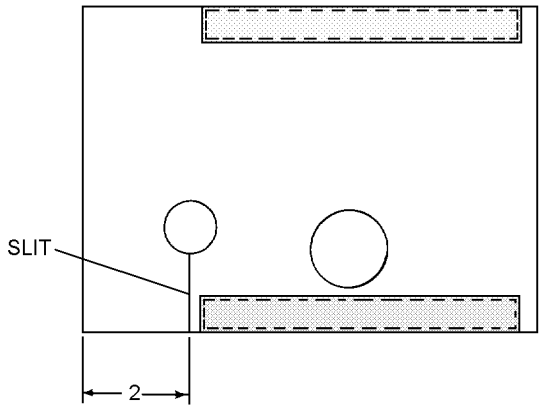

O007702D

Step 2d - Para 15-77

3. Install protective cover before installing inflator and CO_2 cylinders.

15-78. FABRICATION OF COLLAR LOBE WEBBING LOOPS. To fabricate collar lobe webbing loops, proceed as follows:

Materials Required

Quantity	Description	Reference Number
18-inch Length	Webbing, Nylon, Type IV, 1-inch Width	MIL-T-5038 NIIN 00-261-8579 (CAGE 81349)
2	Post, Snap Fastener	MS27981-5B NIIN 00-250-6858 (CAGE 96906)
2	Stud, Snap Fastener	MS27981-4B NIIN 00-901-9660 (CAGE 96906)
2	Socket, Snap Fastener	M527981-3B, NIIN 00-276-4966 (CAGE 96906)
2	Cap, Snap Fastener	M527981-1B NIIN 00-276-4954 (CAGE 96906)
As Required	Thread, Nylon Type II, Size E	V-T-295 NIIN 00-204-3884

NOTE

All stitching shall be 10 to 12 stitches per inch, size E nylon thread.

1. Cut two 9-inch lengths of 1-inch wide nylon webbing and sear ends.

2. Sew one piece of webbing to outer side of each collar lobe casing in accordance with dimensions shown in figure 15-9.

3. Position and install snap fasteners in accordance with dimensions shown in figure 15-9, and ensure proper mate.

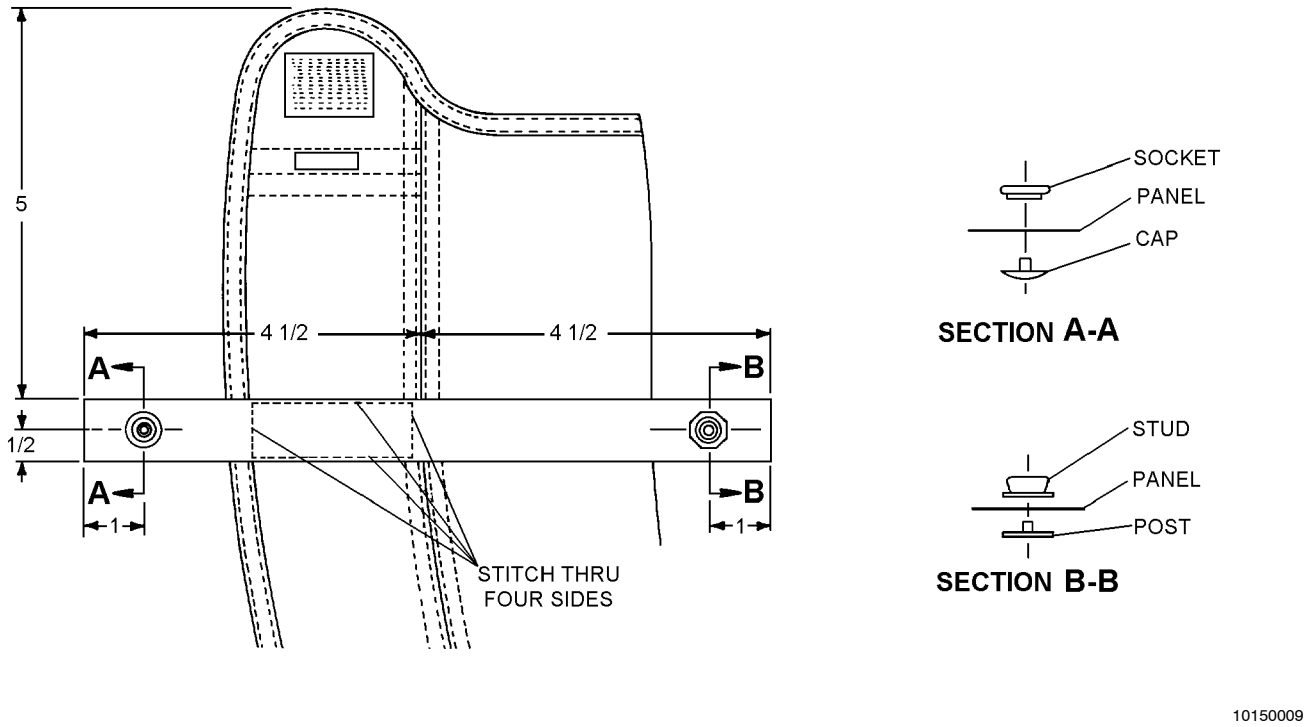

Figure 15-9. Addition of Webbing Loops

15-79. FABRICATION AND INSTALLATION OF WAIST LOBE ATTACHMENT PATCH. The following procedures pertain to the fabrication and installation of the left waist lobe attachment patch. These instructions are typical and are applicable for right waist lobe installations.

CAUTION

Only Polyurethane adhesives and Polyurethane-coated cloth patches shall be used on Polyurethane-coated LPU-21D/P life preserver assemblies.

Materials Required

Quantity	Description	Reference Number
12	Cap, Snap Fastener	MS27983-1 NIIN 00-891-9073

Materials Required (Cont)

Quantity	Description	Reference Number
12	Socket, Snap Fastener	MS27983-2 NIIN 00-945-2577
12	Stud, Snap Fastener	MS27983-3 NIIN 00-276-4908
12	Post, Snap Fastener	MS27983-4 NIIN 00-276-4978
As Required	Cloth, Nylon, Polyurethane Coated	MIL-C-87178
As Required	V-Tape, One-inch	1957AS11-6
As Required	Adhesive, Polyurethane	MIL-A-17315 P/N UR-1092 NIIN 01-375-7855
As Required	Toluene	TT-T-548 NIIN 00-281-2002
	-or-	
	Methyl Ethyl Ketone (MEK)	TT-M-261 NIIN 00-281-2762

NOTE

See paragraph 15-63 for procurement information for polyurethane adhesive, UR-1092.

15-80. Bladder Attachment Patch. Procedures for fabrication and installation of the bladder attachment patch are as follows:

1. Spread left waist lobe of deflated life preserver bladder on clean flat surface.

2. Fabricate attachment patch using polyurethane coated nylon cloth.

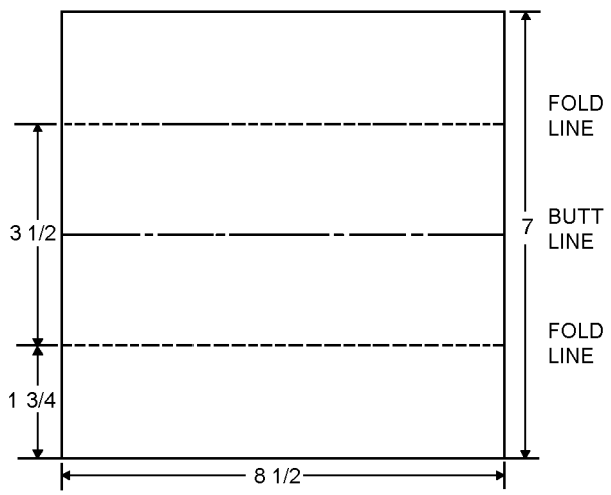

O0080002

Step 2 - Para 5-80

3. Fold cloth at fold lines, with coated side inside, butt edges together at butt line to form attachment patch 8 1/2 inches by 3 1/2 inches. Crease edges at fold line.

4. Complete the basic attachment patch form by applying adhesive to coated side of the patch in accordance with paragraph 15-64, fold and butt together edges as in step 3.

5. Cut two 8 1/2-inch lengths of one-inch V-tape and cement one length on each side of the attachment patch, open V to the outside. Follow cementing procedures in paragraph 15-63.

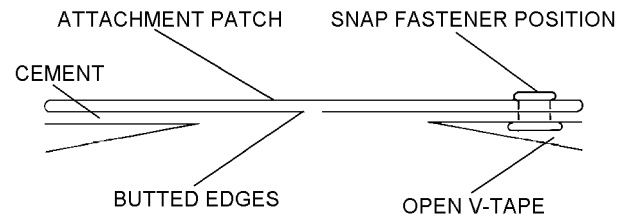

O0080005

Step 5 - Para 15-80

6. Measure and punch six holes in attachment patch for installation of six uni-directional snap fastener sockets (figure 15-10).

7. Install six uni-directional snap fastener sockets with dots on buttons oriented to center point of attachment patch (figure 15-10).

8. Position attachment patch on waist lobe as indicated in figure 15-10 and mark the area on waist lobe. Apply polyurethane adhesive in accordance with paragraph 15-63 and attach the patch to waist lobe.

15-81. Installation of Casing Attachment Patch Snap Fastener Studs. Install six uni-directional snap fastener studs in waist lobe casing as follows:

1. Spread casing assembly flat on clean level surface. Hold in flat non-distorted position using thumb tacks or other available means not harmful to fabric.

2. Measure and mark snap fastener positions using dimensions in figure 15-11. Remove restraints from casing.

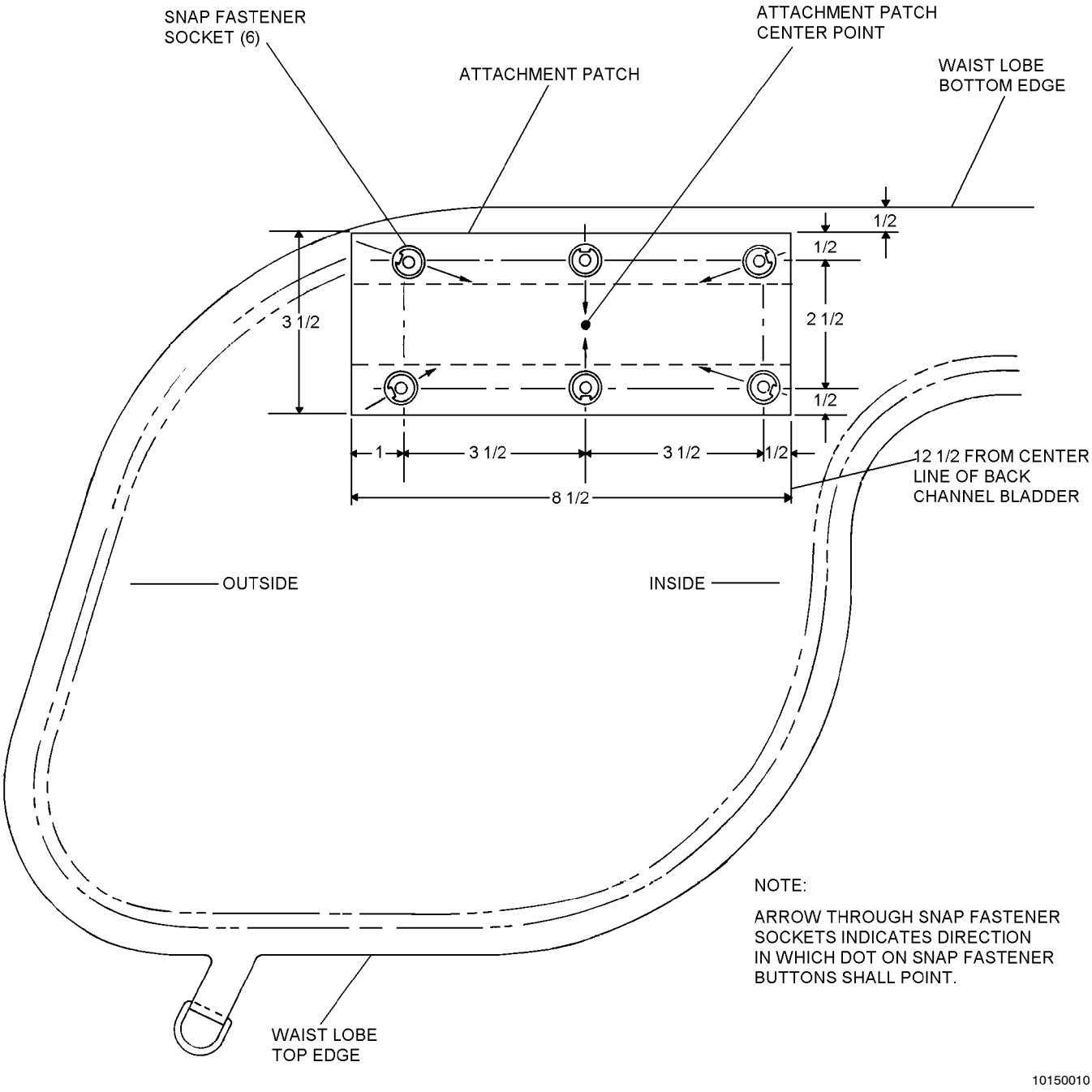

Figure 15-10. Attachment Patch Installation Dimensions

3. Install six snap fastener studs and eyelets.

15-82. FABRICATION AND INSTALLATION OF LOCKING PIN COVER (LIFE PRESERVERS WITHOUT NO. 3 SPUR GROMMET). Fabricate and install the locking pin cover as follows:

Materials Required

Quantity	Description	Reference Number
1	Socket, Snap Fastener	MS27981-3B NIIN 00-276-4966
1	Cap, Snap Fastener	MS27981-1B NIIN 00-276-4954

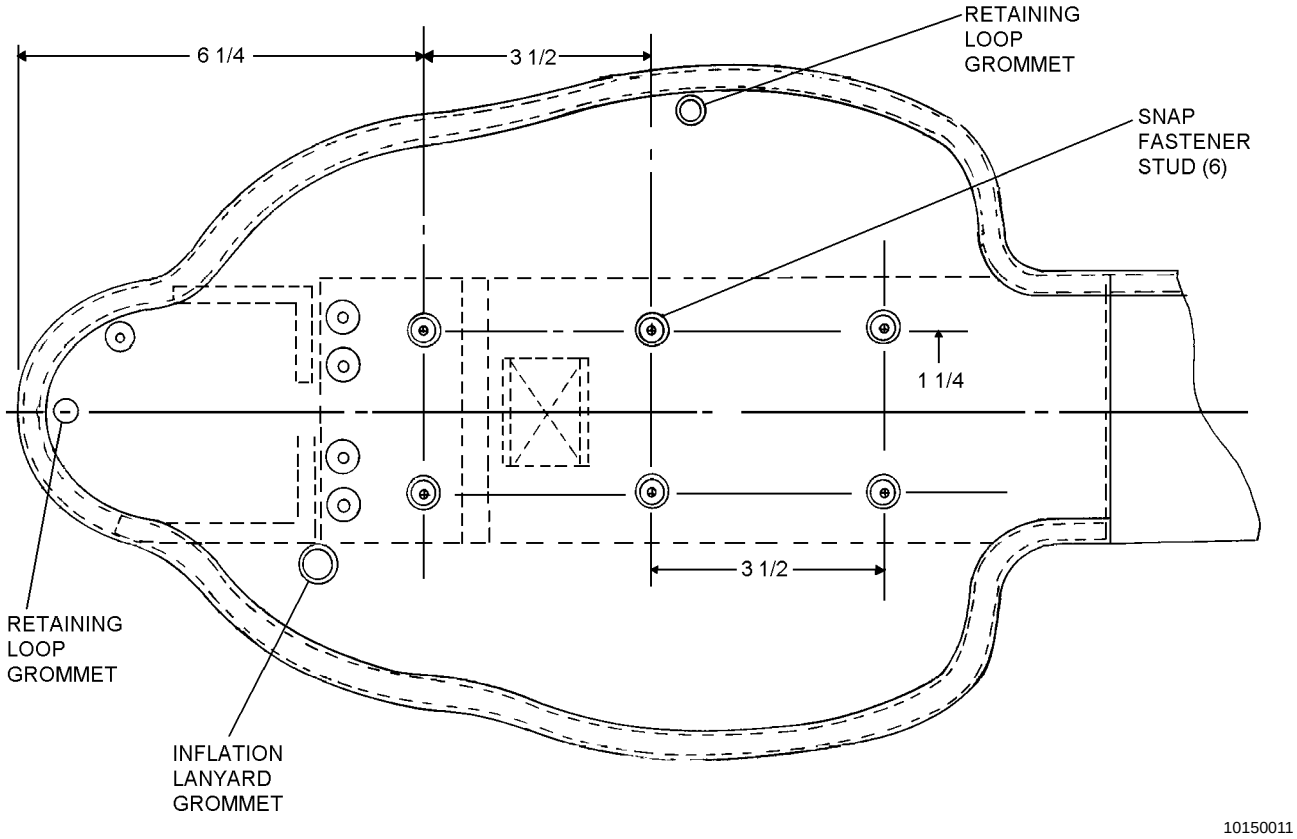

Figure 15-11. Installation Casing Attachment Patch Snap Fastener Studs

Materials Required

Quantity	Description	Reference Number
As Required	Cloth, Nylon Polyurethane-coated, Type I	MIL-C-83489 NIIN 01-335-3129
As Required	Thread, Stitching, Nylon, Type I or II, Size E	V-T-295 NIIN 00-204-3884
As Required	Tape, Binding, Nylon, 3/4-inch Wide, Sage Green 1551 Type III	MIL-T-5038 NIIN 00-176-8083

1. Cut basic locking pin cover from coated nylon cloth in dimensions shown in figure 15-12. Define form of locking pin cover using appropriate end of casing waist lobe assembly as pattern.

2. Reinforce fabric with single row stitching around entire perimeter of locking pin cover.

NOTE

Binding tape may be in one continuous strip or two sections.

3. Apply 3/4-inch binding tape to perimeter of cover as shown in figure 15-12.

4. Align locking pin cover with mating surface of casing assembly and install in accordance with figure 15-13.

5. Mark snap fastener alignment and install locking pin cover, snap fastener socket and button.

NOTE

When properly aligned with casing assembly, the straight edge of locking pin cover will be butted 1/8-inch from edge of beaded inflation handle snap fastener stud installation (casing main panel subassembly).

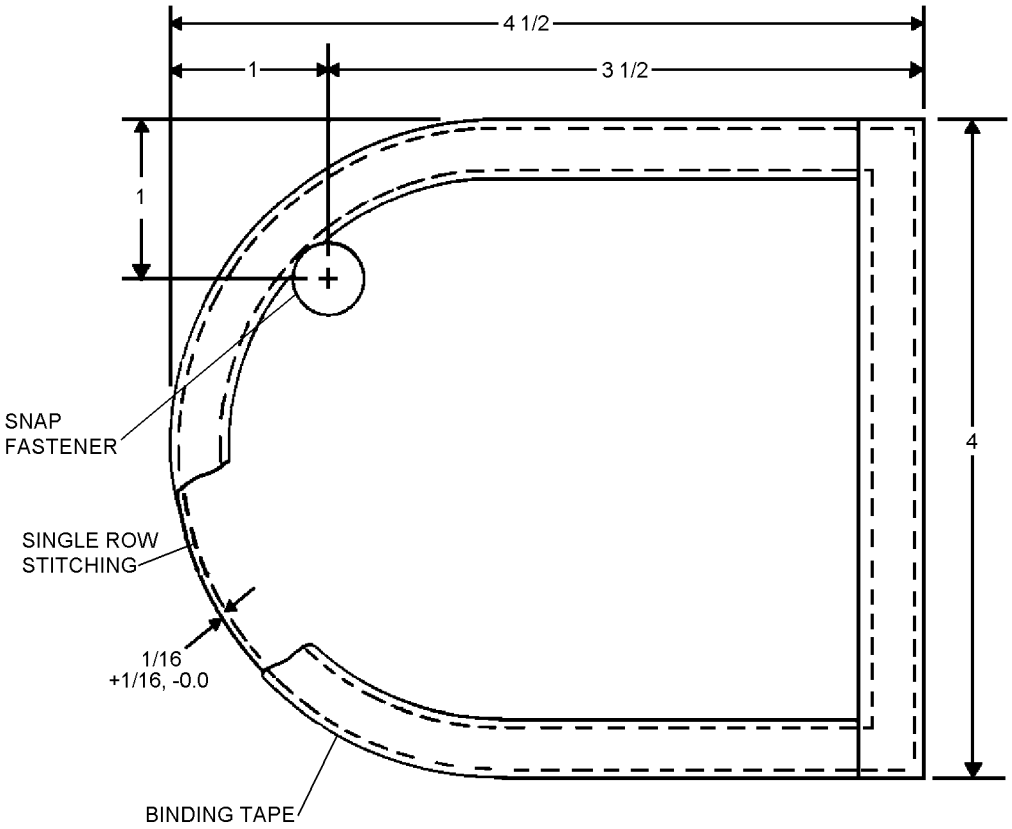

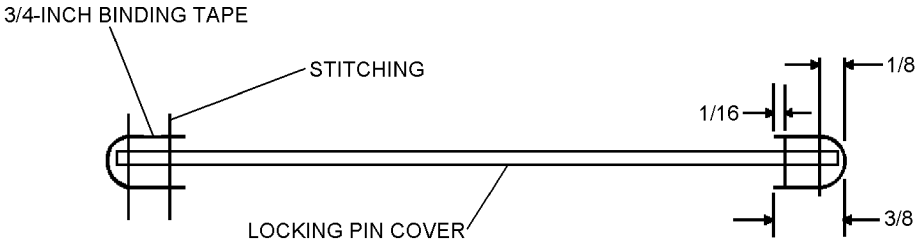

BINDING TAPE INSTALLATION

RIGHT HAND SHOWN - LEFT HAND OPPOSITE

10150012

Figure 15-12. Fabrication of Locking Pin Cover LPU-21D/P

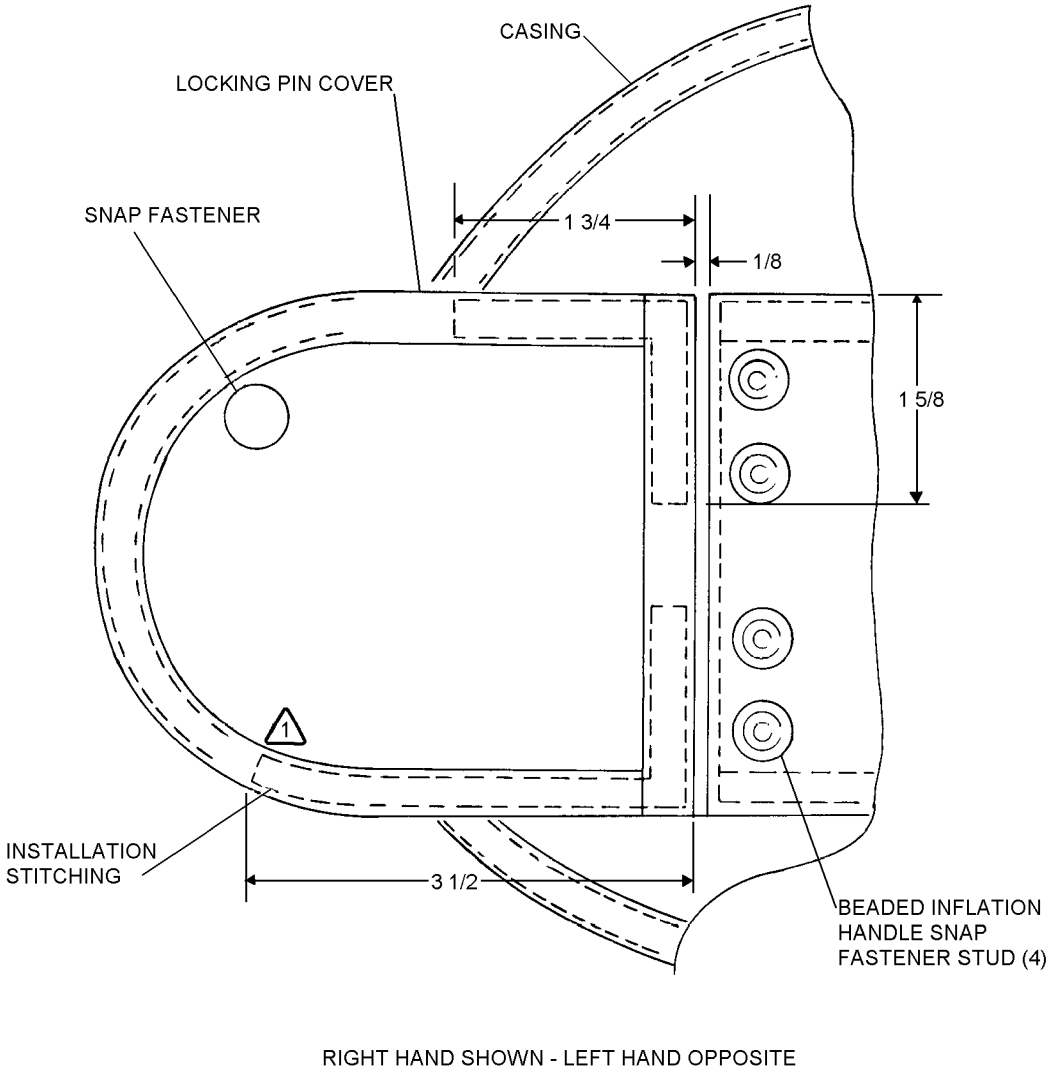

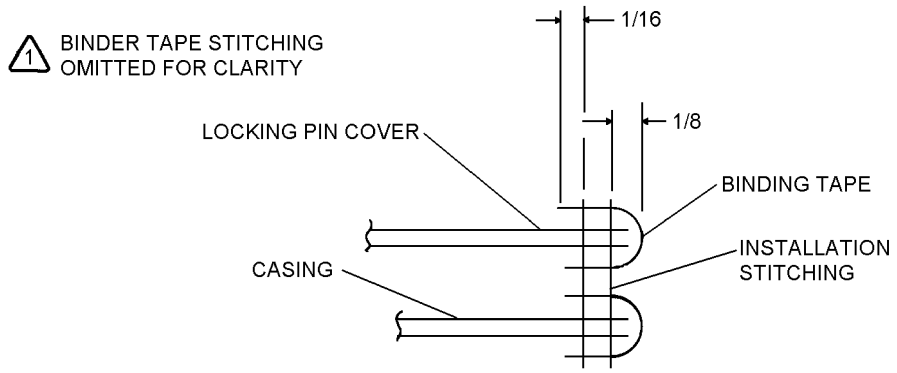

10150013

Figure 15-13. Locking Pin Cover Installation LPU-21D/P

15-82A. FABRICATION OF 6-INCH EXTENSION PANEL FOR CASING ASSEMBLY (LPU-21D/P LIFE PRESERVER). Fabrication instructions are as follows:

NOTE

Extension panels supplied in kits measure nine inches installed length. Panels may be modified (lengthwise) to obtain best fit for individual aircrewmembers. For ALSS Pool use, modifying SV-2B/LPU-21D assemblies with extension panels in several sizes (lengths) to accommodate aircrew needs is authorized. When issued together, the SV-2B and casing assembly extension panels should be of matching lengths.

Upon completion of the modification the LPU-21D/P shall be redesignated as the LPU-35/P Life Preserver.

Materials Required

Quantity	Description	Reference Number
As Required	Duck Cloth, Nylon	MIL-C-7219 (CAGE 81349) NIIN 00-765-2863
As Required	Tape, Nylon, 1-inch, Type IV,	MIL-T-5038 (CAGE 81349) NIIN 00-261-8579
As Required	Tape, Hook Fastener (Black) 2-inch	MIL-F-21840 (CAGE 81349) NIIN
As Required	Tape, Pile Fastener (Black) 2-inch	MIL-F-21840 (CAGE 81349) NIIN 00-405-2265
As Required	Thread, Nylon, Size E	V-T-295 (CAGE 81348) NIIN 00-248-9715
2	D-Rings	MS51925-2
As Required	Ink, Marking, Laundry, Black	SPE-92 NIIN 00-161-4229

NOTE

All stitching shall be with size E nylon thread using 8 to 10 stitches per inch, back stitching one inch.

1. Sew 3/4-inch hem along each 12-inch length of 5 1/2 x 12-inch nylon duck cloth to form 4 x 12-inch panel (figure 15-13A).

2. Place panel with 3/4-inch hem down on smooth surface. Measure and mark four equal 3-inch segments (see figure 15-13A).

3. Fold one 3-inch end segment under and sew in place to form 4 x 9-inch panel. Sew 1/16-inch hem along length of each side of panel and folded end.

4. Using 5 1/2-inch length of 1-inch wide nylon webbing tape, pass tape through D-ring MS51925-2 and adjust ends to equal length (2 3/4 inches)

5. Sew tape and D-ring (using boxstitch) to 3-inch fold-back section 7/16 inch from the edge of the panel with tape ends flush with end of 3-inch fold-back. See figure 15-13B. Approximately 1/3 of D-ring loop should extend beyond end of panel.

6. Repeat steps 4 and 5 to attach second D-ring to opposite side of panel.

7. Sew 3 1/4-inch length of two-inch hook fastener tape to top of panel 1/2 inch from end of panel with tape ends 1/4 inch from edges of panel (figure 15-13B).

8. Sew 3 1/2-inch length of two-inch pile fastener tape to top of panel 1/2 inch from end of fold-back section (figure 15-13B) with tape ends 1/4 inch from edges of panel.

9. Sew 3 1/2-inch length of two-inch pile fastener tape to bottom of the panel directly beneath and in the same manner as in step 8.

10. Sew 3 1/2-inch length of two-inch hook fastener tape to bottom of the panel 1/4 inch from fold line (casing webbing and panel overlap point) with tape end 1/4 inch from edges of panel (figure 15-13B).

11. Position the assembled extension panel with the attachment end (figure 15-13A) under the casing webbing (figure 15-13B) with D-rings of extension panel facing down as shown. Stitch sides and end of panel to casing webbing. Stitch end of casing webbing and extension panel together.

12. To stow the extension panel, see figure 15-13B and fold panel down and under so bottom pile strip mates with hook tape on bottom of casing webbing. Then fold panel forward and up so remaining pile fastener tape mates with remaining hook tape.

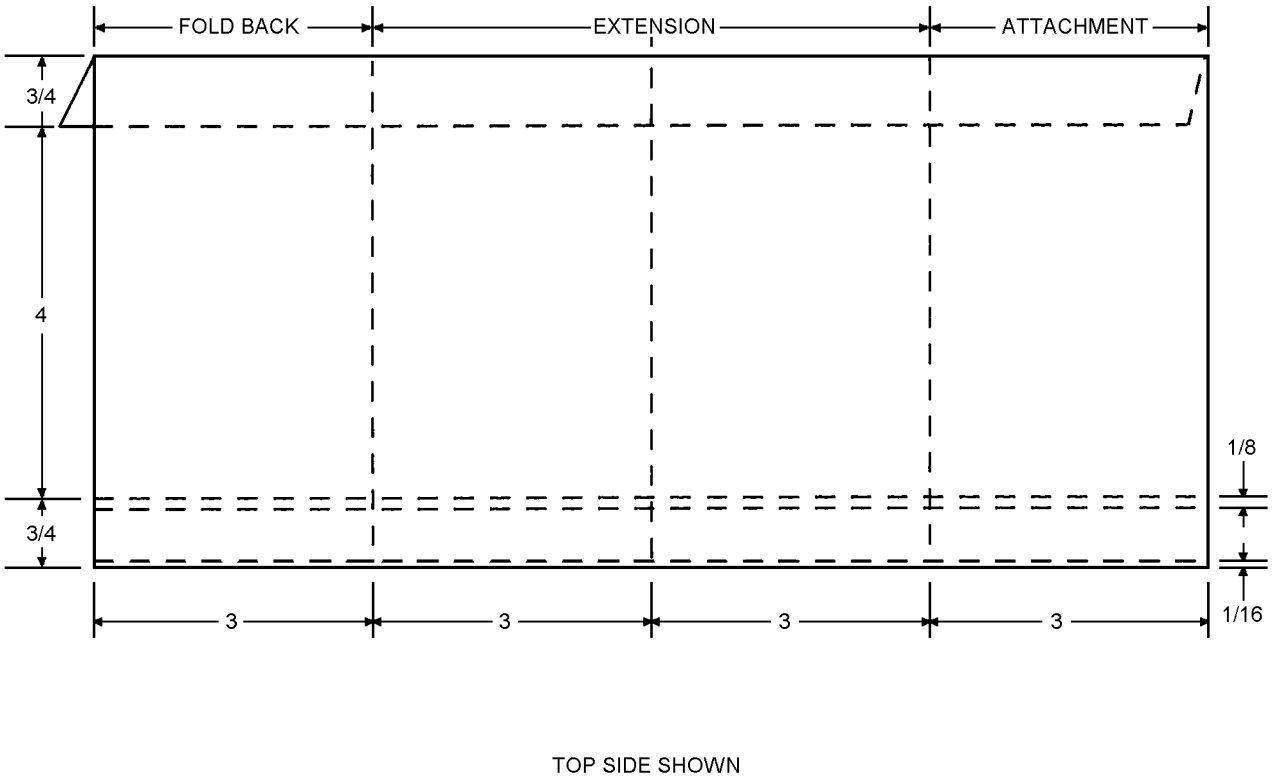

1015013A

Figure 15-13A. Fabrication of Casing Assembly Extension Panel

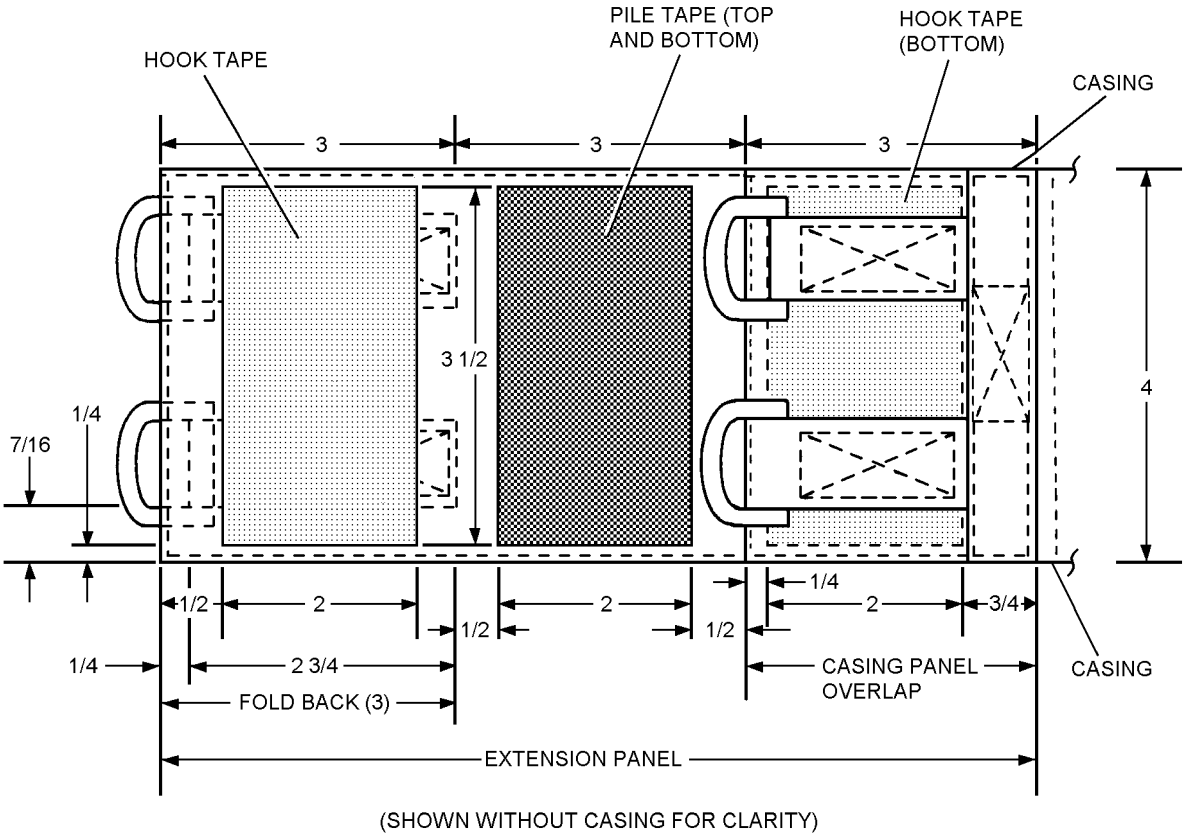

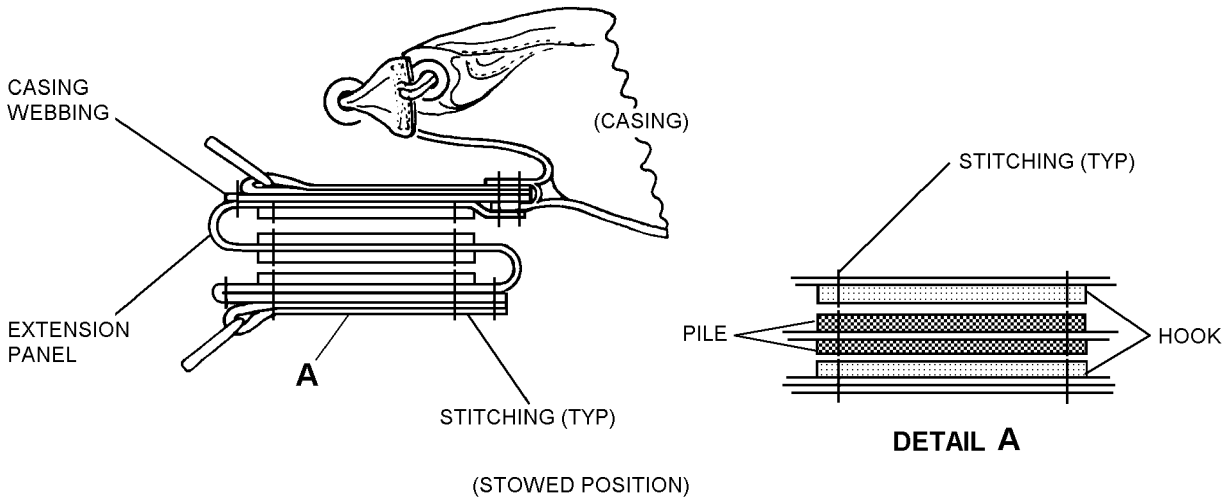

1015013B

Figure 15-13B. Casing Assembly Extension Panel Dimensions

15-83. REPLACEMENT OF COLLAR LOBE UNI-DIRECTIONAL SNAP FASTENERS AND WEBBING. Fabricate and install snap fasteners and shoulder strap webbing as follows:

Materials Required

Quantity	Description	Reference Number
As Required	Webbing, Nylon, Type IV, 1-inch Wide	MIL-T-5083 NIIN 00-261-8579
4	Socket, Snap Fastener	MS27983-2 NIIN 00-945-2577
4	Cap, Snap Fastener	MS27983-1 NIIN 00-891-9073
As Required	Loop, Slide	MS51940-3B
As Required	Thread, Nylon, Type I or II, Size E	V-T-295 NIIN 00-204-3884

1. Cut 14-inch length of nylon webbing and sear each end.

2. Form a three-layer end-tab in accordance with figure 15-14. Reeve free end through slide loop.

3. Position free end of webbing on collar lobe casing and stitch in place as indicated.

NOTE

Ensure dot on button of uni-directional snap fastener is installed with dot-side of buttons facing.

4. Install two uni-directional snap fastener sockets with dots on buttons on the inside (facing) as shown in figure 15-14.

15-84. REPLACEMENT OF FLOTATION BLADDER COLLAR LOBE UNI-DIRECTIONAL SNAP FASTENER STUD. Replacement of the bladder collar lobe snap fastener studs also entails removal of cover and base patches securing the snap fastener and fabrication and installation of new patches. Procedures are as follows:

CAUTION

Only Polyurethane adhesives and Polyurethane-coated cloth patches shall be used on Polyurethane-coated LPU-21D/P life preserver assemblies.

Materials Required

Quantity	Description	Reference Number
2	Stud, Snap Fastener	MS27983-3 NIIN 00-276-4908
2	Post, Snap Fastener	MS27983-4 NIIN 00-276-4978
As Required	Cloth, Nylon, Polyurethane-coated	MIL-C-83489 NIIN 01-335-3129
As Required	Adhesive, Polyurethane	MIL-A-47315 P/N UR-1092
As Required	Toluene	TT-T-548 NIIN 00-281-2002
	-or-	
As Required	Methyl Ethyl Ketone (MEK)	TT-M-261 NIIN 00-281-2762
As Required	Talc, Technical	MIL-T-50036A NIIN 01-080-9589

WARNING

Do not use toluene or MEK near open flame, heat, or electrical sparks. Avoid prolonged contact with skin or breathing of fumes. Use only in well-ventilated area.

NOTE

Toluene shall be the primary solvent used in the fabrication or repair of this assembly. MEK may be used if Toluene is not available. Always use solvents sparingly and wipe up excess solvents; do not allow to dry by evaporation.

1. Apply Toluene or MEK solvent to loosen cover and base patches. Remove loosened patches from life preserver flotation bladder and discard (figure 15-15).

THIS PAGE INTENTIONALLY LEFT BLANK.

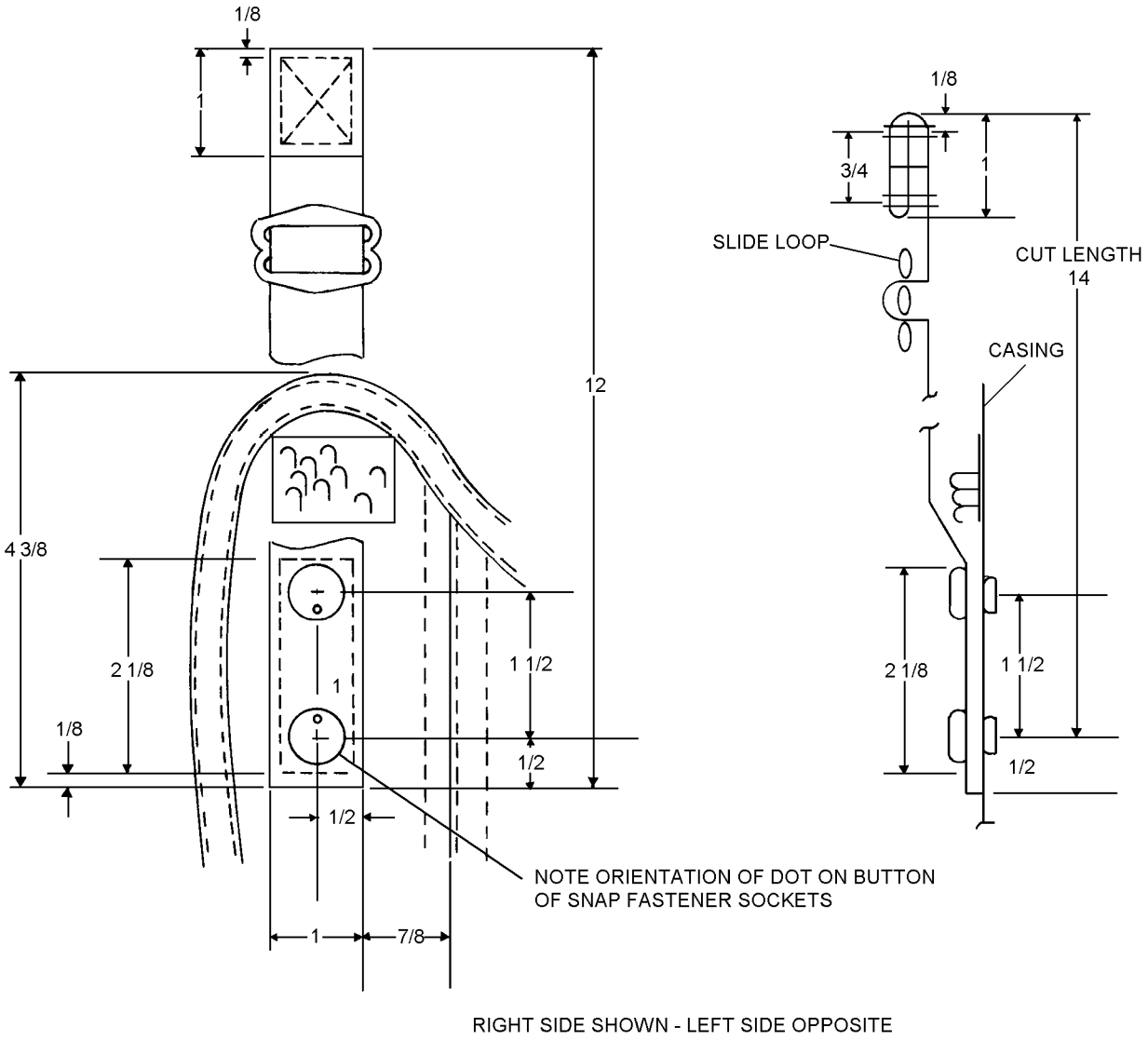

10150014

Figure 15-14. Collar Casing Shoulder Strap Fabrication and Installation

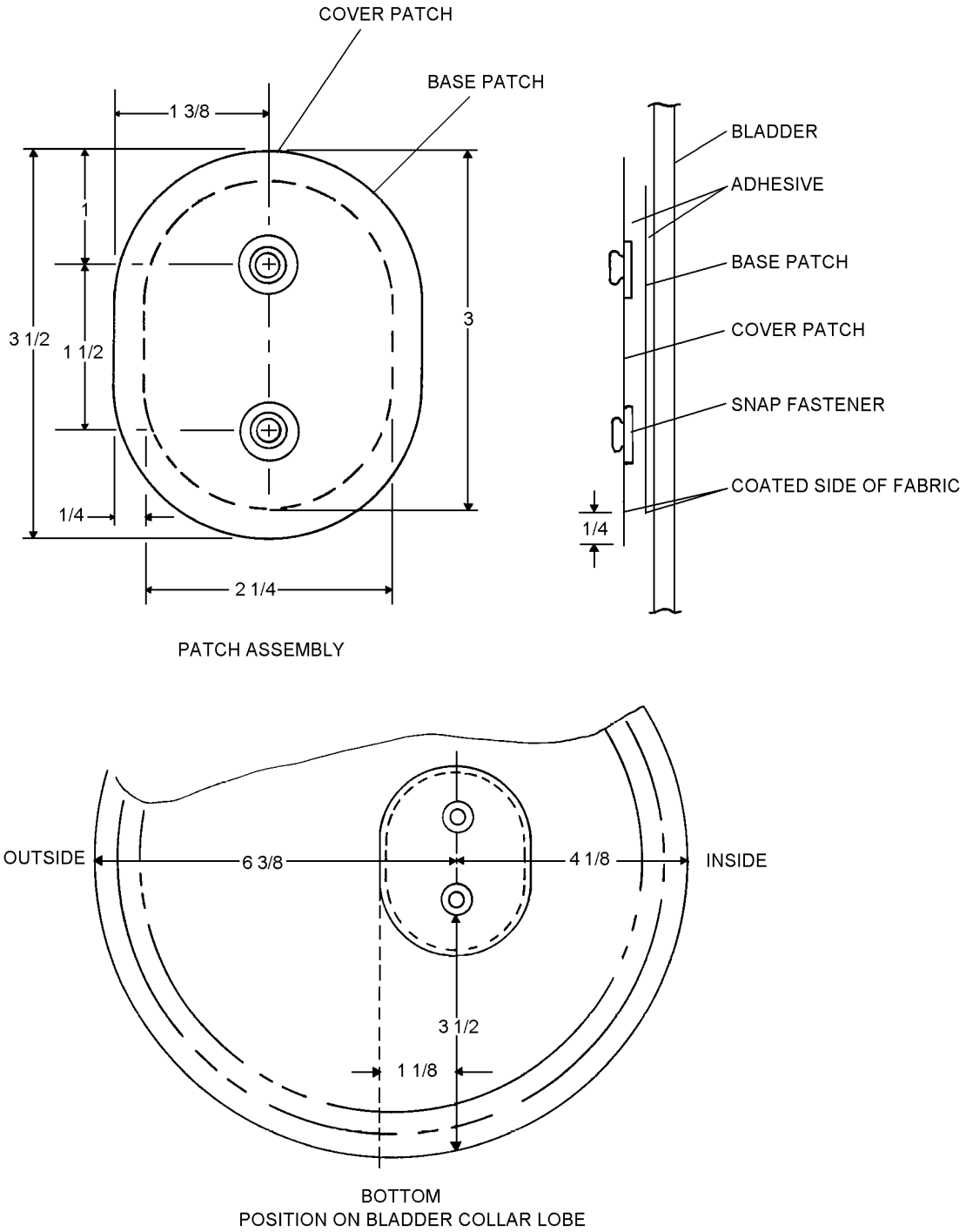

10150015

Figure 15-15. Replacement of Flotation Bladder Collar Lobe Snap Fastener Studs

2. Fabricate new cover and base patches from coated nylon cloth (figure 15-15).

3. Install two uni-directional snap fastener studs on cover patch (figure 15-15).

4. Cement base patch uncoated surface to coated surface of cover patch using adhesive following procedures in paragraph 15-63.

NOTE

Properly oriented base patch will leave 1/4 inch perimeter of cover patch coated surface exposed (figure 15-15).

5. Ensure proper orientation of cover and base patch assembly (figure 15-15) and cement coated surface to life preserver flotation bladder following procedures in paragraph 15-63.

15-85. PACKING PROCEDURE FOR LPU-21D/P LIFE PRESERVER ASSEMBLY.

NOTE

The LPU-21D/P life preserver assembly shall be packed by qualified personnel at the lowest level of maintenance possible.

15-86. To pack an LPU-21D/P life preserver assembly, proceed as follows:

Materials Required

Quantity	Description	Reference Number
As Required	Talc, Technical	MIL-T-50036A NIIN 01-080-9589
As Required	Cord, Nylon Type I	MIL-C-5040 NIIN 00-240-2154
As Required	Thread, Nylon Size A	V-T-295 NIIN 00-204-3803
As Required	Thread, Nylon Size E	V-T-295 NIIN 00-204-3884
As Required	Thread, Nylon Size 3, Waxed	V-T-295 NIIN 00-262-2775

1. Ensure that preserver has been inspected in accordance with paragraph 15-26.

2. Prior to packing, ensure that chambers are thoroughly deflated. Ensure all bladder surfaces front and rear are lightly dusted with talc.

3. Oral inflation valve shall be locked by knurled ring and placed in oral valve pocket. Position life preserver assembly with collar panel folded down.

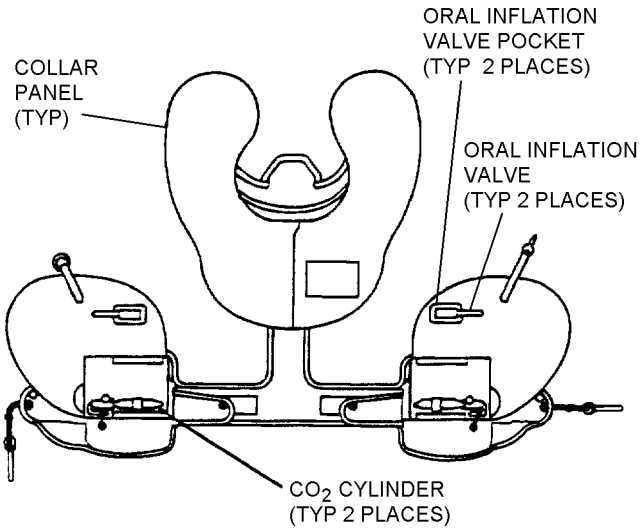

Step 3 - Para 15-86

4. Connect the snap fasteners on the bladders collar lobes with those on the casing and fold collar edge over snap fasteners in casing.

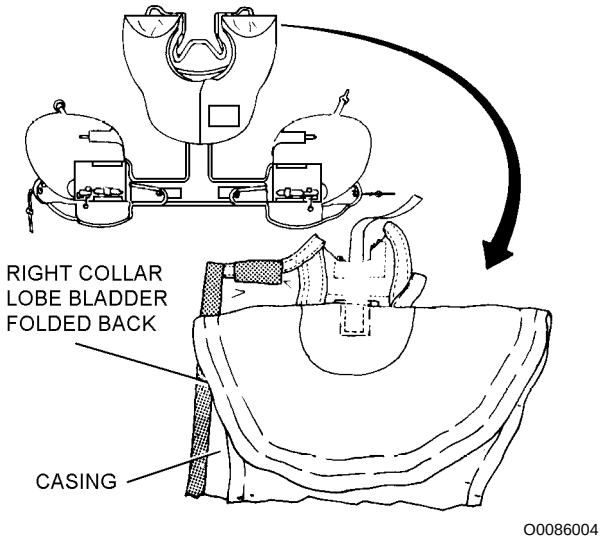

Step 4 - Para 15-86

5. Fold over edge of collar panels.

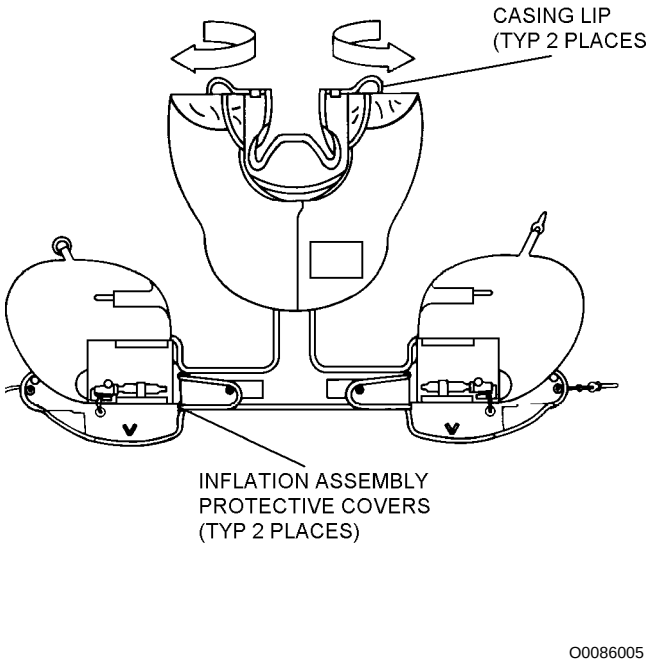

Step 5 - Para 15-86

6. Accordion-fold sides of collar lobes into collar casing.

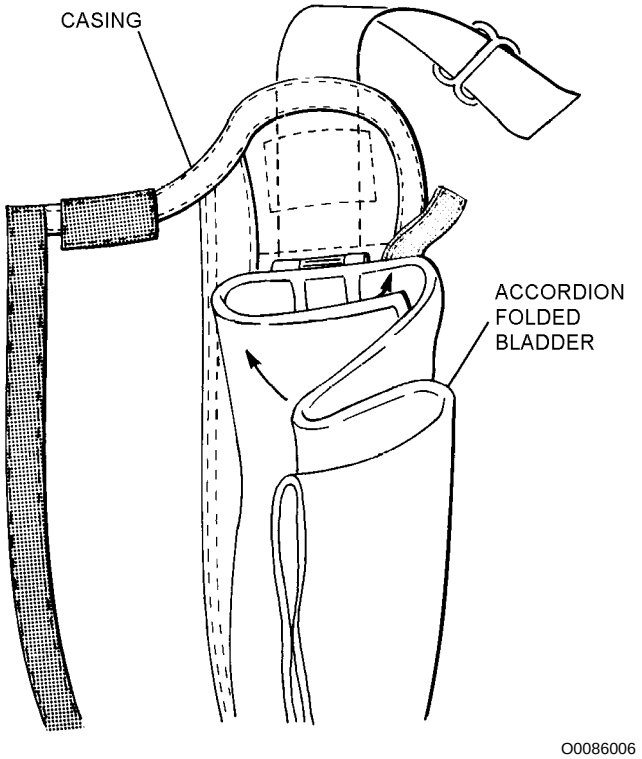

Step 6 - Para 15-86

7. Tuck in casing lip and secure collar casing with hook and pile tape.

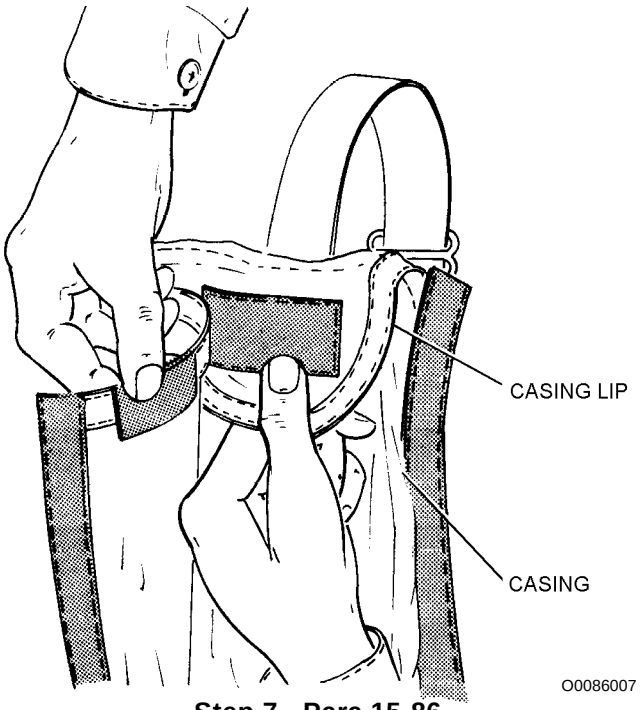

Step 7 - Para 15-86

NOTE

The unsewn 3/8 to 1/2 inch end tab of hook tape located on the front edge of the collar lobe casing shall be attached to the mating pile tape on the collar casing cover.

8. Close collar lobe section by securing the 3/8 to 1/2 inch unsewn portion of hook tape to pile tape casing cover.

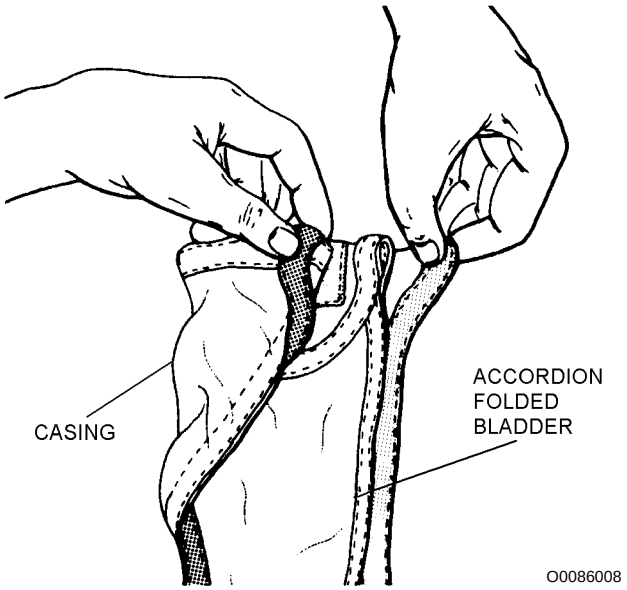

Step 8 - Para 15-86

9. Secure hook and pile tape approximately 8 inches along casing cover edge, securing the accordion-folded bladder within casing cover.

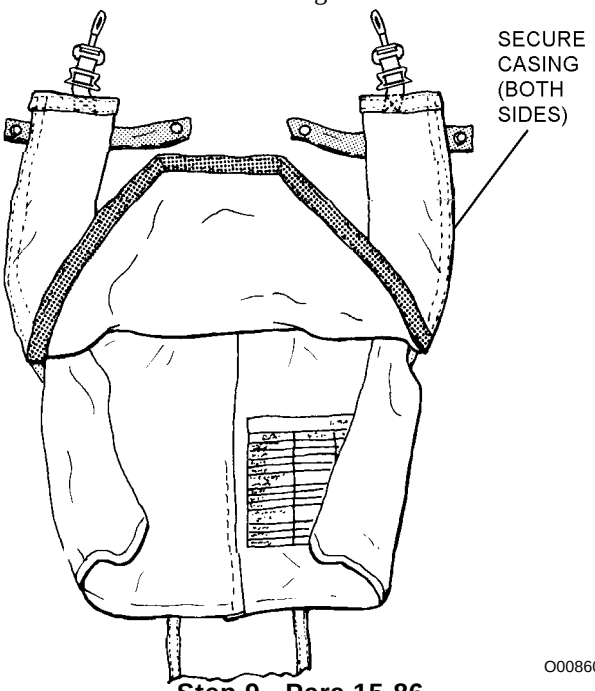

Step 9 - Para 15-86

10. Accordion-fold bottom of collar lobe into collar casing.

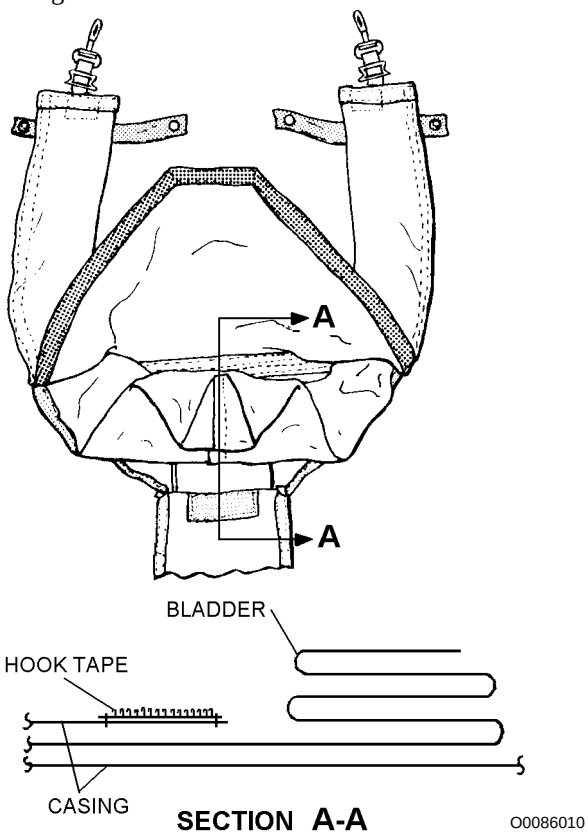

Step 10 - Para 15-86

NOTE

The unsewn 3/8 to 1/2 inch end tab of hook tape located on the rear edges of the collar lobe casing shall be attached to the mating pile tape on the collar casing cover.

11. Continue securing hook and pile tape along casing cover edge and casing lip, ending on unsewn end tabs of hook tape, completely enclosing collar lobe bladder within casing cover. Ensure all hook tape is engaged with pile tape and not exposed.

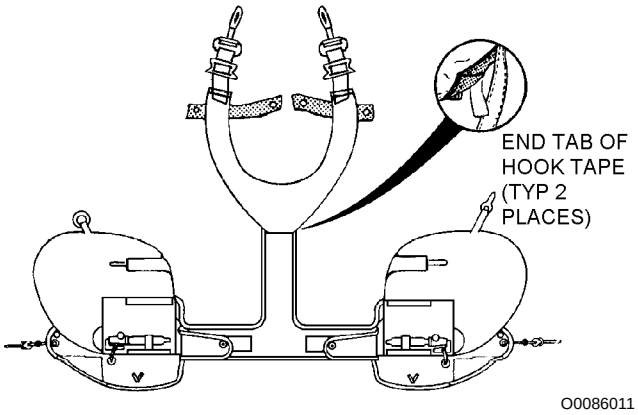

Step 11 - Para 15-86

WARNING

Do not use rubber bands to hold slip-on pockets on D-ring and snaphook fittings.

12. Insert snaphooks and D-ring into slip-on pockets. Close protective cover around inflation assembly and secure with hook and pile tape.

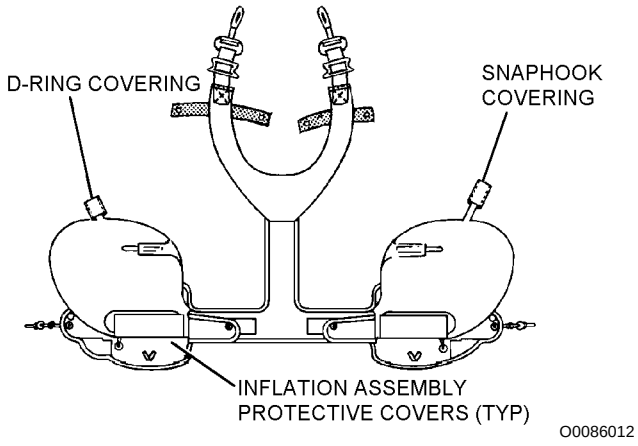

Step 12 - Para 15-86

13. Fold waist lobes over to top edge of protective covers.

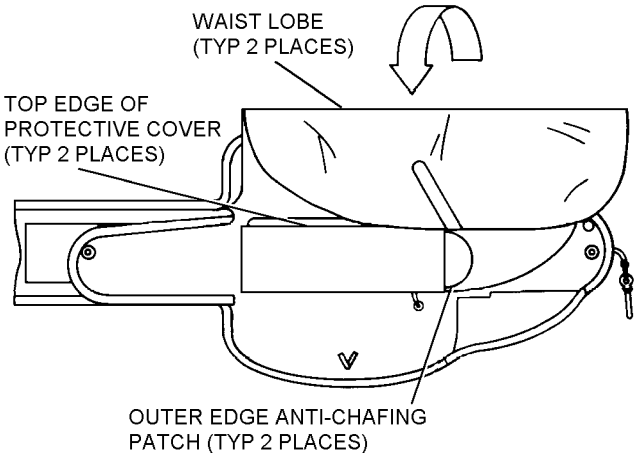

O0086013

Step 13 - Para 15-86

14. Fold waist lobes over to outboard edge of a chafing patch.

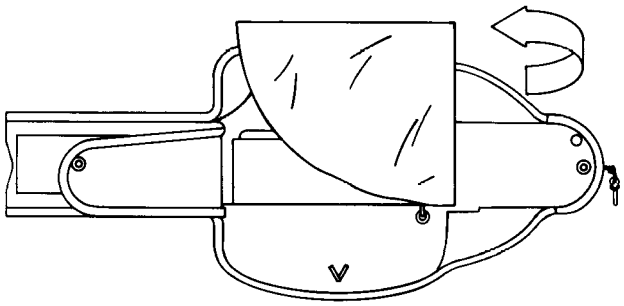

O0086014

Step 14 - Para 15-86

15. Fold waist lobes over to bottom edge of protective covers.

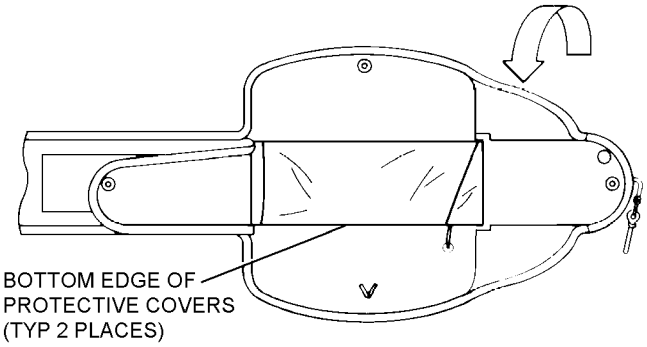

O0086015

Step 15 - Para 15-86

NOTE

Packing cord shall be used to aid in closing life preserver casing.

16. Fold up bottom casing flap containing retaining loop. Insert an 8-inch length of Type I nylon cord through retaining loop (figure 15-16).

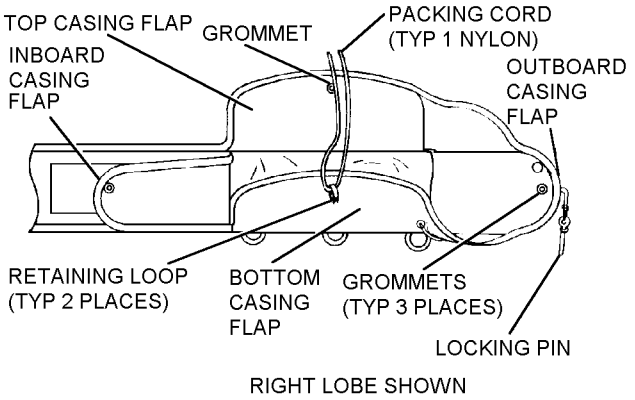

10150016

Figure 15-16. LPU-21D/P Packing Nomenclature

17. Pass ends of packing cord through grommet located in top casing flap (figure 15-16). Pull retaining loop through grommet.

18. Fold inboard casing flap over. Pass the packing cord through the grommet. Pull retaining loop through grommet (figure 15-17).

19. Route locking pin under locking pin cover flap.

WARNING

To avoid possible injury when closing casing of right waist lobe, do not place palm of hand on waist closure snaphooks.

20. Fold outboard casing flap over. Pass packing cord through grommets and pull retaining loop through grommet far enough to accept locking pin. Insert locking pin through retaining loop and into pin keeper loop. Remove packing cord.

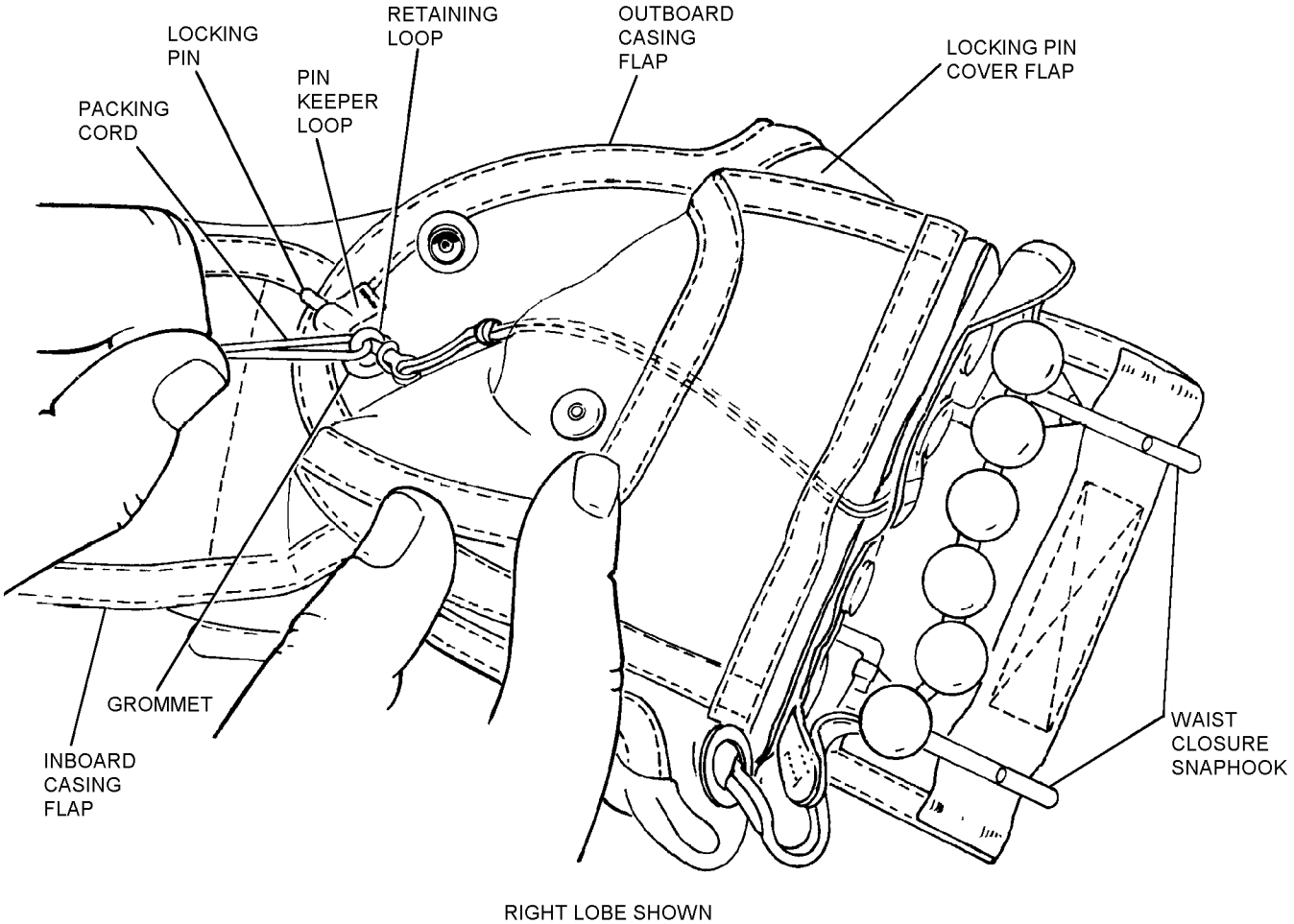

Figure 15-17. Packing LPU-21D/P Life Preserver

21. Safety-tie eye of locking pin to retaining loop with one turn of size A nylon thread, single. Safety-tie beaded inflation handle with one turn of size E nylon thread, single. Draw thread sufficiently to permit a 1/2 ±1/8 inch space between middle beads and webbing on preserver. Tie ends of both safety ties with a surgeon's knot followed by a square knot.

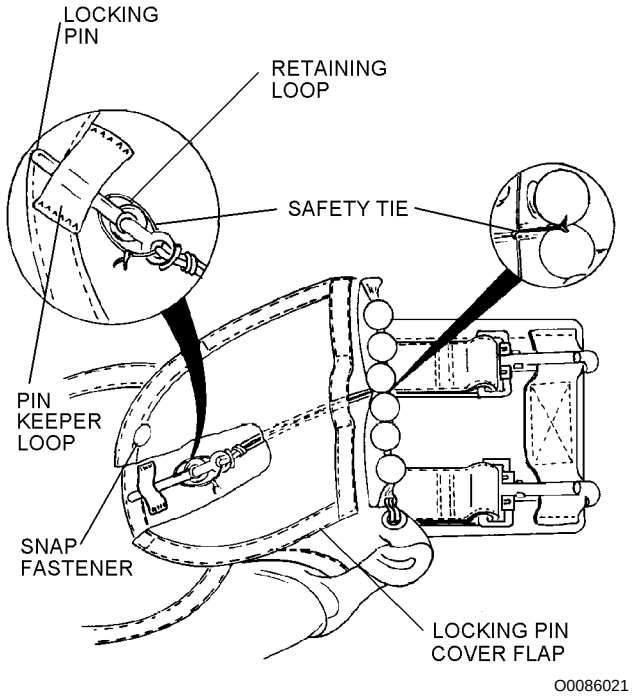

Step 21 - Para 15-86

22. Close locking pin cover flap snap fastener.

NOTE

NAVAIR 13-1-6.5, Rescue and Survival Equipment, contains information on inspection and replacement of survival items.

23. Adjust collar lobe snap hooks to shortest position by feeding webbing through slide loop and snap hook. Tack webbing around center bar of slide loop using waxed three cord, single, two turns, secure with surgeon's knot followed by a square knot. Fold bitter end of webbing (excess) in half one or two times so bitter end of webbing is butted against bar of slide loop. Tack folded bitter end in center using waxed three cord, single, one turn, secure with surgeon's knot followed by a square knot.

24. When required, ensure that survival items have been inspected for expiration dates and damage.

25. Make necessary entries on appropriate form in accordance with OPNAVINST 4790.2 Series.

Section 15-4. Illustrated Parts Breakdown (IPB)

15-87. GENERAL.

15-88. This section lists and illustrates the assemblies and detail parts of the LPU-21D/P Life Preserver assembly.

15-89. The Illustrated Parts Breakdown should be used during maintenance when requisitioning and identifying parts.

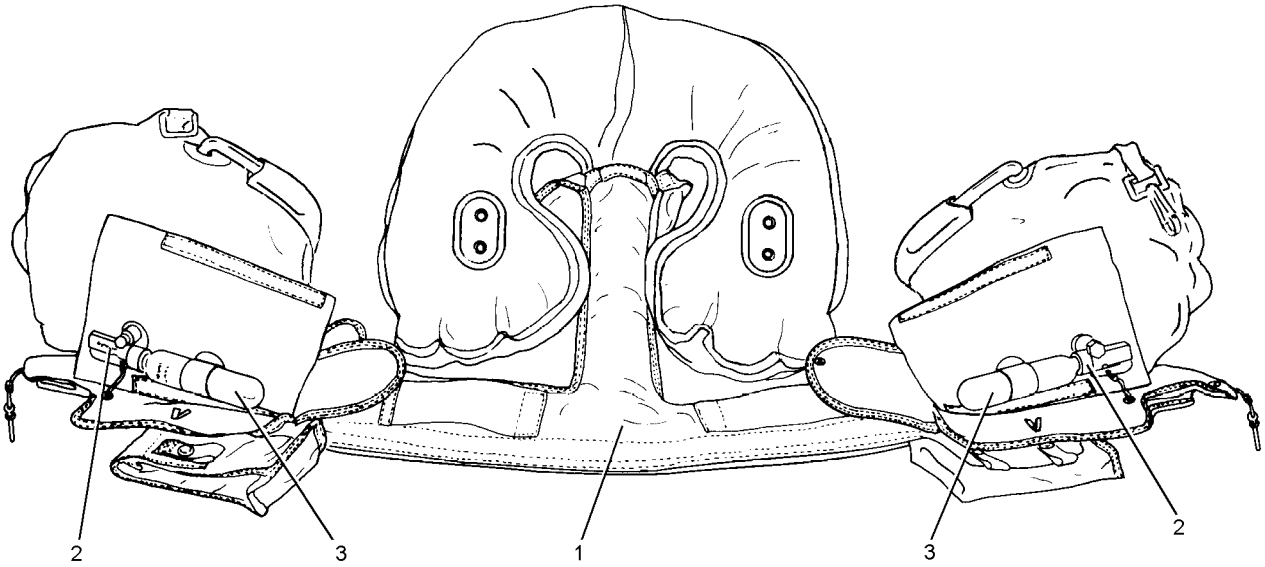

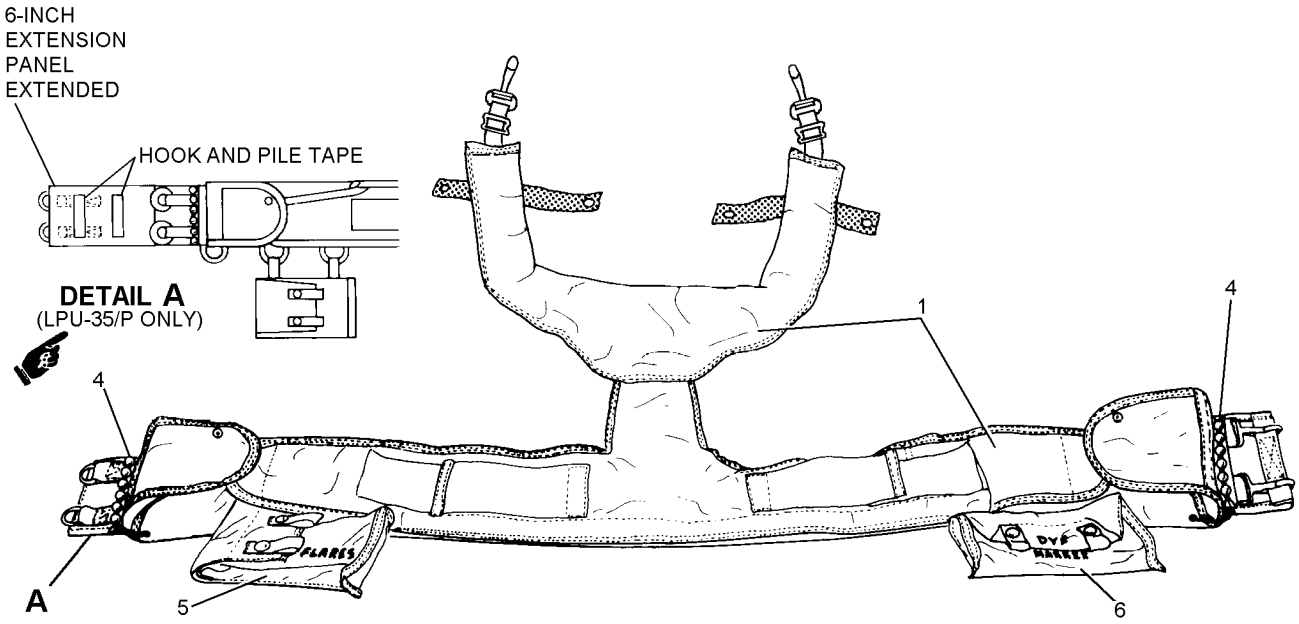

10150018

Figure 15-18. LPU-21D/P and LPU-35/P Life Preserver Assembly, Illustrated Parts Breakdown

Figure and Index Number	Part Number	Description 1 2 3 4 5 6 7	Units Per Assembly	Usable On Code
15-18	1957AS102-1 (NIIN 01-406-1583)	LPU-21D/P LIFE PRESERVER	REF	
	1957AS100	LPU-35/P LIFE PRESERVER (Note 3)	REF	
-1	1957AS104-1 (NIIN 01-399-1267)	. CASING ASSEMBLY, LPU-21D/P	1	
-2	MIL-I-25370 (NIIN 00-561-0094)	. INFLATION ASSEMBLY, Type II	2	
	105AS100-3	. . GASKET, Top (30003) (Note 1)	2	
	105AS100-4	. . GASKET, Bottom (30003) (Note 1)	2	
	105AS100-2	. . GASKET, Seat Seal (30003) (Note 1)	2	
-3	MIL-C-25369 (NIIN 01-077-8773)	. . CO_2 CYLINDER, Type III, 35 Gram	2	
-4	975AS121-11 (NIIN 00-120-4752)	. . BEADED INFLATION HANDLE, Type I	2	
-5	68A73D3-61 (NIIN 00-118-6187)	. FLARE POUCH ASSEMBLY (Note 2)	1	
-6	68A73D2-41 (NIIN 00-118-6186)	. DYE MARKER POUCH ASSEMBLY . . . . . (Note 2)	1	

Notes:
1. Top, bottom, and seat seal gaskets are obtained from Valve Stem and Seat Seal Kit, P/N 105AS100-5, NIIN 00-498-6964, which contains two top, two bottom, and two seat seal gaskets.
2. Optional equipment at the discretion of the Squadron Commander.
3. The LPU-35/P is a modified LPU-21D/P. It is not a stocked item and cannot be ordered through supply channels.

NUMERICAL INDEX

Part Number	Figure and Index Number	SM&R Code
MIL-C-25369	15-18-3	PAGZZ
MIL-I-25370	15-18-2	PAGZZ
105AS100-2	15-18-2	
105AS100-3	15-18-2	
105AS100-4	15-18-2	
1957AS100	15-18	
1957AS102-1	15-18	PAOGG
1957AS104-1	15-18-1	PAGZZ
68A73D2-41	15-18-6	PAGZZ
68A73D3-61	15-18-5	PAGZZ
975AS121-11	15-18-4	PAGZZ

THIS PAGE INTENTIONALLY LEFT BLANK.

CHAPTER 16

LPU-23/P SERIES LIFE PRESERVER ASSEMBLY

Section 16-1. Description

16-1. GENERAL.

WARNING

The LPU-23/P series life preserver assemblies contain an automatic inflator which is intended for use by an aircrewmember in an ejection seat aircraft ONLY.

16-2. The LPU-23/P series life preserver assemblies are authorized for use by all aircrew personnel operating in high performance ejection seat aircraft. It is designed as a constant wear item for use with the survival vest and will not interfere with the removal of the nonintegrated parachute harness. Survival item pouches are attached to the life preserver casing. The dye marker and signal flares are not initially supplied and must be individually requisitioned. See figures 16-1 and 16-2 and table 16-1.

NOTE

LPU-21/P and LPU-21A/P life preserver assemblies that were configured with the FLU-8A/P automatic inflation device have been designated LPU-23A/P assemblies. The FLU-8A/P shall, through attrition, be replaced by the FLU-8B/P automatic inflation device. The newest LPU-23/P series life preserver requisitioned from supply as a complete assembly is the LPU-23C/P (Chapter 18). The LPU-23A/P and LPU-23B/P life preservers will remain in service until beyond capability of repair.

16-3. The LPU-23B/P flotation assembly may be used in conjunction with the LPU-23C/P casing assembly. This configuration has been designated LPU-23B(V)1/P. See Chapter 27.

NOTE

The use of the LPU-23C/P flotation assembly with the LPU-23B/P casing is not authorized.

16-4. CONFIGURATION.

NOTE

The LPU-23/P series life preserver assembly weighs 4 pounds (without survival items) and provides a minimum of 65 pounds buoyancy.

CAUTION

Use only Polychloroprene adhesives and Polychloroprene-coated cloth patches on Polychloroprene-coated LPU-23/P flotation assemblies.

16-5. FLOTATION ASSEMBLY. The flotation assembly is constructed of polychloroprene-coated nylon cloth and consists of two independent flotation chambers. One chamber consists of the left waist lobe joined by a tube to the right collar lobe. This chamber contains one automatic/manual CO_2 inflation assembly and the oral inflation valve attached to the left waist lobe. The other chamber consists of the right waist lobe joined by a tube to the left collar lobe. This chamber contains one automatic/manual CO_2 inflation assembly and the oral inflation valve attached to the right waist lobe. The two chambers are sewn together at the collar lobes.

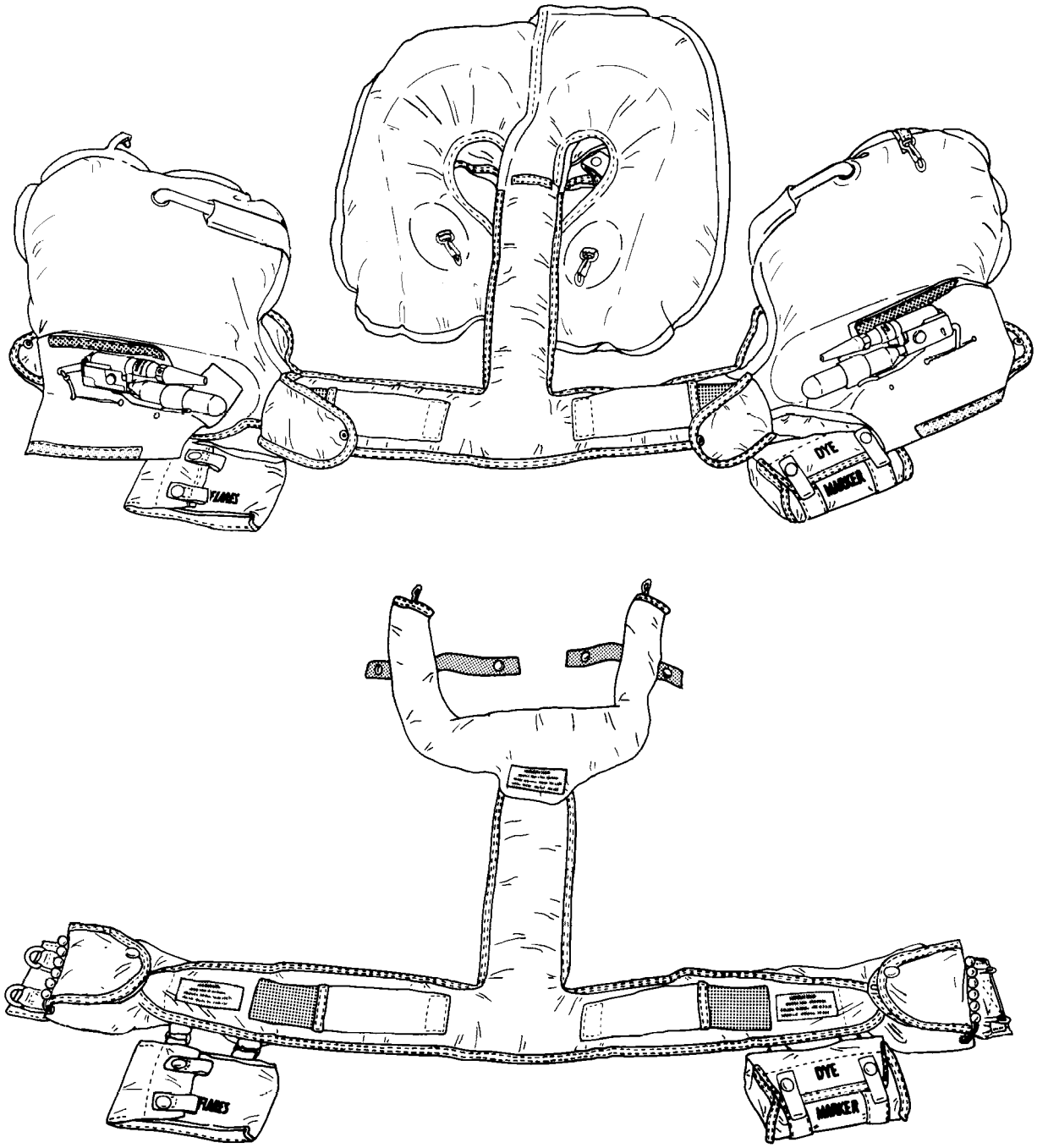

10160001

Figure 16-1. LPU-23/P Series Life Preserver Assembly

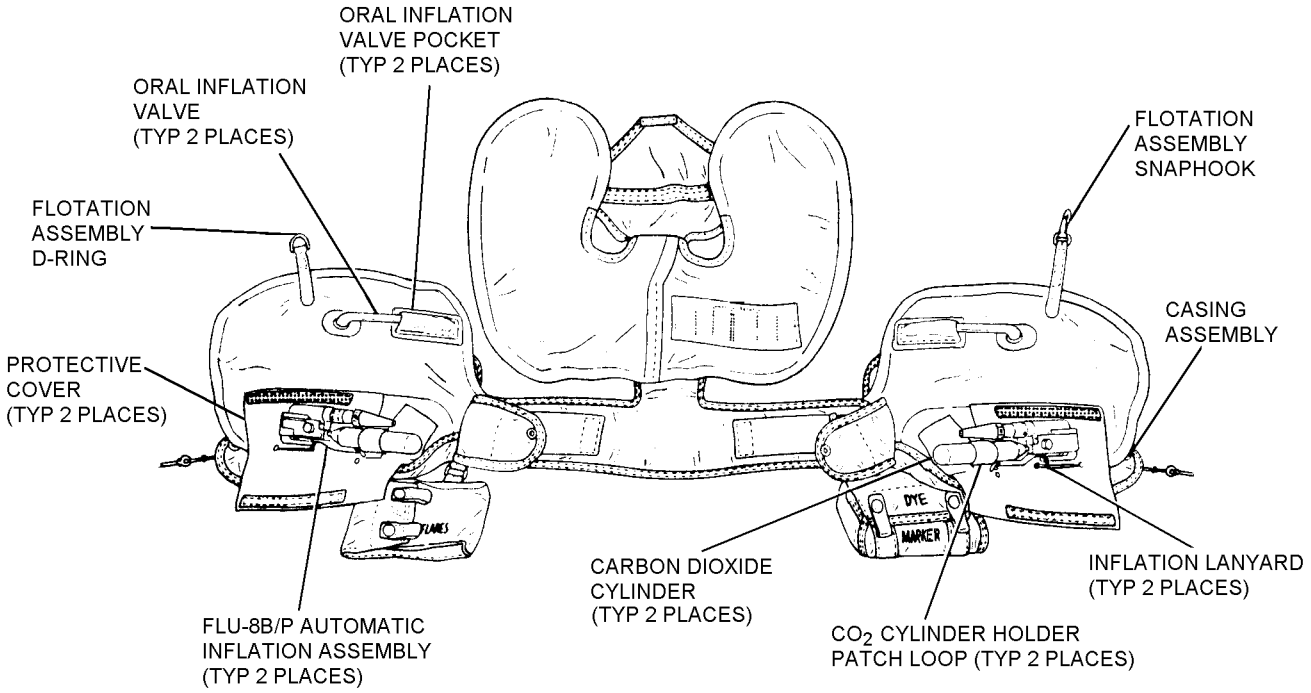

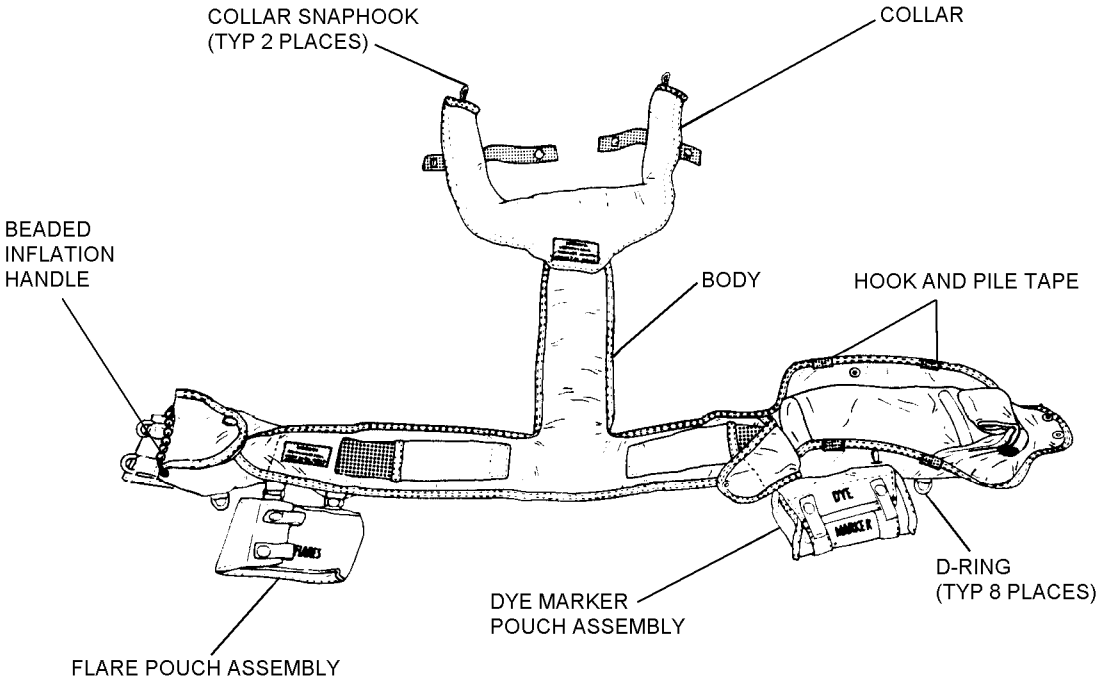

10160002

Figure 16-2. LPU-23/P Series Life Preserver Assembly, Parts Nomenclature

Table 16-1. LPU-23/P Series Survival Items

Description	Quantity Required	Reference Number	NIIN	SM&R Code
Signal, Smoke and Illumination, Marine MK-124 MOD 0 (Note 1)	2	—	01-030-8330	PA--Z
Dye Marker (Note 1)	2	MIL-S-17980	00-210-9986	PAOZZ
Notes: 1. Optional equipment at the discretion of the Squadron Commander.				

NOTE

The designation FLU-8A/P has been left in this chapter, although all FLU-8A/P units should have been replaced with FLU-8B/P units. Any FLU-8A/P Automatic Inflator found in service during scheduled maintenance shall be replaced with a FLU-8B/P Automatic Inflator.

16-6. FLU-8B/P AUTOMATIC INFLATION DEVICE. The FLU-8B/P automatic/manual CO_2 inflation assembly consists of a 35-gram CO_2 cylinder and an inflation device. The inflation device contains an inflator subassembly, sensor plug assembly, a packaging loop, and a top and bottom gasket. Each inflation assembly is connected to a valve stem attached to each waist lobe. (Each stem is equipped with a replaceable check valve.) In addition, a beaded handle with an inflation lanyard and a casing flap locking pin are connected to each inflation device. See figures 16-1 and 16-2.

16-7. WAIST LOBE. Each waist lobe of the flotation assembly is equipped with an attachment patch used for securing the casing assembly by means of rivets. In addition, the right waist lobe is equipped with a snaphook and the left waist lobe is equipped with a D-ring. The snaphook and D-ring are used to secure the waist lobes together after inflation.

16-8. COLLAR LOBE. Each collar lobe of the inflation assembly is equipped with a snaphook for attachment to the survival vest D-rings. (Parachute risers are routed outside of the collar lobes.) An inspection record patch is also provided on a collar lobe.

16-9. CASING ASSEMBLY. The casing assembly is fabricated from an aramid, fire-resistant fabric. The casing assembly protects the flotation assembly and provides for size adjustment and attachment to the wearer. The casing assembly consists of the adjustable casing, an adjustable webbing belt, belt keepers and D-rings, and the front connector assembly. The casing assembly is secured around the wearer's waist by the front connector assembly, which consists of two snaphooks and two D-rings backed by webbing pads for comfort.

16-10. WEBBING BELT. The webbing belt, attached to the inside waist portion of the casing assembly, provides for waist size adjustment from 30 to 44 inches. The webbing belt keeper loops retain the webbing belt and provide for attachment of the life preserver to the aircrewmember's integrated torso harness suit about the waist. In addition, there are six D-rings secured to the webbing belt keeper loops for attachment of the survival item pouches, liferaft retaining line, and other accessories.

16-11. HOOK AND PILE TAPES. Hook and pile tapes, attached to the outside waist portion of the casing, are used for slack adjustment. In addition, hook and pile tapes attached about the periphery of the collar casing and the lower edge of the back portion of the casing are used to enclose the casing assembly about the flotation assembly.

16-12. APPLICATION.

16-13. The LPU-23/P series life preserver assembly is authorized for use by all aircrew personnel wearing compatible flight clothing while operating in high performance ejection seat aircraft ONLY.

16-14. FUNCTION.

NOTE

The primary means of life preserver inflation is to manually pull the beaded handles.

16-15. The LPU-23/P series life preserver assembly is inflated either automatically (by immersion in fresh or salt water) or manually (by pulling both inflation assembly beaded handles).

16-16. Automatic inflation occurs when immersion in water triggers the electronic circuit, firing the explosive primer. The high-pressure forces the piercing pin forward, releasing the inner end of the packaging cord loop and puncturing the 35-gram CO_2 cylinder which releases the pressurized gas. Automatic inflation is a one-time function of the FLU-8B/P inflator. A new automatic inflator must be installed to replace the previously spent device. Manual inflation occurs when both beaded inflation handles are pulled in a natural, slightly down and straight out position from the body. This action removes the retaining pins securing the casing assembly about the waist lobes and actuates the inflation assemblies. The hook and pile tapes securing the casing assembly about the collar lobes will separate as the preserver inflates. The FLU-8B/P inflator may be operated manually an unlimited number of times without affecting the one-time automatic feature.

NOTE

The casing must be manually opened and the flotation assembly unfolded prior to inflating the life preserver through the oral inflation valve.

16-17. In an emergency situation, the oral inflation valves should be used to top off the inflated preserver, maintain inflation of a leaky preserver, or inflate a chamber if an inflation assembly malfunctions. The oral inflation valves are also used to inflate a preserver with air during an inspection test or to evacuate a preserver in preparation for packing.

Section 16-2. Modifications

16-18. GENERAL.

16-19. The LPU-23/P series life preserver assembly shall be updated by comparing configuration of the assembly to modifications listed in table 16-2. Common repairs and fabrication instructions to maintain serviceability are listed in table 16-3.

NOTE

After incorporating the FLU-8B/P automatic inflation device, the LPU-21/P series and LPU-23/P series life preservers were redesignated the LPU-23A/P.

Table 16-2. LPU-23/P Series Directives

Description of Modification	Application	Modification Code
Casing change to modify casings that are too tight (small) to securely hold the bladder.	All LPU-23 series	66-507

Table 16-3. LPU-23/P Series Common Repairs and Fabrications

Description of Repair or Fabrication	Paragraph Number
Determination of Repairability	16-58
Casing Repair Procedures	16-60
Casing Grommet Replacement Procedures	16-61
Cementing Life Preservers	16-62
Patching Life Preservers	16-63
Replacement of Oral Inflation Valve	16-65
Recementing of Bladder Fin Seams	16-66
Fabrication of Slip-On Pockets For Life Preserver Hardware	16-68
Replacement of Flare and Dye Marker Pouch Snaphooks	16-69
Replacement of Collar Lobe Snaphooks	16-70
Flare Pouch Repair	16-71
Disassembly of the Life Preserver	16-72
Reassembly of Life Preserver	16-73
Replacement of Beaded Inflation Handle Assembly	16-74
Replacement of FLU-8B/P Automatic Inflator Assembly	16-75
Replacement of Packaging Cord Loop, FLU-8B/P	16-76
Replacement of Sensor Plug Cap Assembly, FLU-8B/P	16-77
Replacement of Top and Bottom Gaskets	16-78
Replacement of Check Valve Assembly	16-79
Fabrication of Protective Cover Assembly	16-80
Addition of Collar Lobe Webbing Loops	16-81
Fabrication and Installation of Locking Pin Cover	16-82

Section 16-3. Maintenance

16-20. GENERAL.

16-21. This section contains information on inspection, disassembly, repair/replacement, testing, and reassembly of the LPU-23/P series life preserver.

16-22. INSPECTION.

16-23. All life preservers shall be subjected to Preflight, Special and Calendar/Phase Inspections.

16-24. The Preflight Inspection shall be performed on life preservers prior to each flight by the aircrewmember to whom the life preserver is assigned. The Preflight Inspection shall be performed on life preservers installed in aircraft prior to each flight by assigned aircrewmembers.

16-25. The Special Inspection shall be performed on all aircraft installed life preservers at intervals not to exceed 30 days. The inspection shall be performed at the organizational level of maintenance by personnel assigned to the Aviator's Equipment Branch.

16-26. Upon completion of the inspection, the inspection date and inspector's signature shall be entered on appropriate form in accordance with OPNAVINST 4790.2 Series. The 30-Day Special Inspection may be recorded on a separate history card from the history card recording Calendar/Phase Inspections, functional checks, and modifications.

16-27. The Calendar/Phase Inspection shall be performed on all life preservers prior to placing in service. The Inspection cycle thereafter shall be as follows: personal issue life preservers shall be inspected once every 90 days. Aircraft-installed life preserver inspection shall coincide with the inspection cycle of the aircraft in which installed. See applicable Planned Maintenance System (PMS) publications for specific intervals. In no case shall the interval exceed 231 days. Unless operational requirements demand otherwise, the life preserver Calendar/Phase Inspection shall be performed by the intermediate level of maintenance or above. The functional test shall be performed prior to placing in service, every fourth inspection cycle thereafter, and whenever an inflation assembly is replaced. The leakage test shall be performed during every inspection cycle. The battery visual inspection for the LPU-23/P series will be performed prior to placing life preservers in service. If inspection indicates damage, complete appropriate forms in accordance with OPNAVINST 4790.2 Series and forward entire assembly to supply. Refer to paragraph 16-58 for determination of repairability.

16-28. QUALITY ASSURANCE. Properly detailed procedures present a logical sequence for the inspection process. The more critical procedures are underlined to designate steps which require a Quality Assurance inspection to assure performance of specific requirements. After the underlined step is performed by the Aircrew Survival Equipmentman, the procedure shall be verified before the next step is performed. This verification shall be performed by a Collateral Duty Inspector or Quality Assurance Representative (CDI, CDQAR, or QAR). Work Center supervisors are primarily responsible for quality assurance within their centers. OPNAVINST 4790.2 Series permits supervisors to nominate their more experienced personnel to serve as quality assurance inspectors. Nominated personnel shall be screened and examined by the Quality Assurance Officer prior to their designation as Quality Assurance Inspectors or Quality Assurance Representatives by the Commanding Officer. Under no circumstances shall an Aircrew Survival Equipmentman perform his own quality assurance inspection.

16-29. PREFLIGHT/SPECIAL INSPECTION. To perform a Preflight/Special Inspection, proceed as follows:

WARNING

Ensure that the beaded inflation handles are readily accessible. The beaded inflation handles shall be secured with four snap fasteners to the life preserver end flap.

CAUTION

Do not open any sealed or safety-wired/safety tied portions of preserver for Preflight/Special Inspection.

1. Inspect exposed metal parts for corrosion and damage.

2. Inspect for presence, security of attachment and, if applicable, operation of survival items.

3. Inspect casing fabric for cuts, tears, abrasions, security of stitching, and other damage.

4. Check warning label for secure attachment to life preserver fabric.

5. Ensure beaded inflation handles are secured to snap fasteners. Inspect safety ties on beaded inflation handles. The beaded inflation handle safety ties may be replaced without removing the life preserver from service.

6. Inspect safety ties on locking pins.

7. Inspect rivets securing flotation assembly to casing for presence and security of attachment.

8. Inspect uni-directional snap fasteners securing flotation assembly to casing assembly for presence, security of attachment, corrosion, and ease of operation.

9. Inspect hook and pile tape closure at collar for separation; fasten as necessary.

10. Adjust and don preserver to ensure proper fit.

11. If any discrepancy is noted, the preserver shall be removed from service and repaired in accordance with procedures in this volume.

16-30. ACCEPTANCE/CALENDAR/PHASE INSPECTION. The Acceptance/Calendar/Phase Inspection consists of the following tasks:

1. Beaded Inflation Handle Inspection

2. Case, Container/Pouch Inspection

3. Functional Test (every fourth inspection cycle)

4. Visual Inspection

5. Life Preserver Configuration

6. General Inspection

7. Battery Visual Inspection (every fourth inspection cycle)

8. Battery Voltage Testing (once every 90 days)

9. Markings Inspection

10. Survival Items Inspection

11. Inflation Assembly Inspection

12. Beaded Inflation Handle Pull Test

13. Leakage Test

14. Records Updating

15. Repacking

16-31. BEADED INFLATION HANDLE INSPECTION. Inspect beaded inflation handle for the following:

1. Attachment of inflation lanyard to beaded handle.

2. Attachment of locking pin lanyard to beaded handle. Overhand knot on locking pin lanyard shall be within 3/4 inch from eye of pin.

3. Corrosion on snap fasteners and ease of operation.

4. Cuts, tears, deterioration, abrasion, stains, and general cleanliness of fabric.

5. Presence of safety tie on beaded inflation handle.

16-32. CASE, CONTAINER/POUCH INSPECTION. To inspect cases, containers, and/or pouches, proceed as follows:

1. Inspect fabric for cuts, tears, deterioration, abrasion, stains, and general cleanliness.

2. Inspect seams for proper adhesion or stitching.

3. Inspect straps and loops for security and wear.

4. Inspect any other parts for wear, damage, and security.

NOTE

Life preservers missing the D-rings used to attach dye marker and flare pouches shall be considered serviceable provided the aircrewmember to whom it is issued does not desire to utilize the pouches.

5. All hardware for security of attachment, corrosion, damage, wear and, if applicable, ease of operation.

6. Inspect uni-directional snap fastener assemblies for presence, security of attachment, proper orientation, ease of operation, corrosion, and wear.

NOTE

All uni-directional snap fasteners shall be installed with the dot on the button of the snap fastener socket positioned on the side of the snap fastener to which lift must be applied to disengage the socket from the snap fastener stud.

All snap fasteners on the attachment patch of each flotation lobe shall be installed with the dot on each socket button positioned nearest to, and pointing toward, the center point of the attachment patch.

7. If any discrepancies are found, the case, container, or pouch shall be repaired or removed from service as deemed appropriate by the inspection activity.

16-33. FUNCTIONAL TEST. To perform a functional test, proceed as follows:

CAUTION

Ensure area surrounding preserver is free of foreign objects.

1. Completely open preserver casing prior to conducting functional test. Both release pins shall be removed from their respective loops, the collar hook and pile tape fasteners shall be separated, and the waist and collar lobes shall be completely unfolded and laid out flat.

CAUTION

The functional test for the LPU-23/P series life preservers will be performed manually. Automatic actuation of the FLU-8B/P automatic inflator is a one-time function. A new FLU-8B/P inflator shall be installed on the life preserver to replace a previously spent one. The FLU-8B/P inflator can be operated manually an unlimited number of times, however, after each manual operation a new O-ring and CO_2 cylinder must be installed. Refer to paragraph 16-60.

2. Actuate inflation assemblies.

3. The preserver shall fully inflate to design shape, without evidence of restriction, in less than 30 seconds.

4. If preserver does not properly inflate, determine cause. Ensure stem and valve are clean and free of foreign matter.

5. If correction is made, the preserver shall be functionally tested again.

6. Deflate preserver in accordance with paragraph 16-34 to remove all CO_2.

16-34. DEFLATION. To deflate a life preserver, proceed as follows:

Support Equipment Required

Quantity	Description	Reference Number
1	Pump, Rotary Vacuum (or equivalent)	NIIN 00-052-5015 (90567)
As Required	Hose, 3/8- or 1/2-inch Inside Diameter Rubber	—

1. Attach one end of rubber hose to vacuum pump.

2. Deflate through oral inflation valves. Unlock oral inflation valve, hold in open position, and hold vacuum pump hose against end of oral inflation valve. When

compartment is collapsed, release oral inflation valve. Screw lock closed.

16-35. VISUAL INSPECTION.

CAUTION

Remove all carbon dioxide cylinders prior to inflating life preserver with air.

NOTE

If suitable air source is not available, water-pumped nitrogen (FED SPEC BB-N-411) may be substituted.

16-36. Prior to visually inspecting a life preserver assembly, the life preserver shall be inflated with air to 1.0 psig.

16-37. LIFE PRESERVER CONFIGURATION. The life preserver shall be updated by comparing it to figures 16-1 and 16-2, and tables 16-1 and 16-2.

16-38. GENERAL INSPECTION. Examine life preservers for the following:

1. Preserver fabric for cuts, tears, punctures, deterioration and abrasion. Refer to paragraph 16-63 for repair instructions.

2. Seam tapes for proper adhesion. Refer to paragraph 16-62 for repair instructions.

3. Valve inlet stems for security.

4. Check that silver indicator is not visible in firing check port. If the silver indicator is visible, the inflator is spent and the automatic feature of the inflator is negated. A new inflator shall be installed on the life preserver to replace the previously spent inflator. Refer to paragraph 16-75.

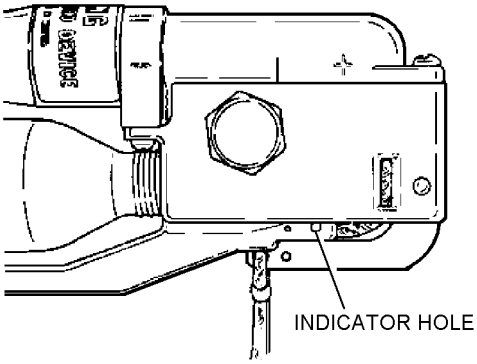

P0038004

Step 4 - Para 16-38

NOTE

For data on total life of the FLU-8B/P automatic inflation assemblies, refer to NAVAIR 11-100-1.1. If total life expiration date occurs before date of next scheduled calendar inspection, replace inflator assembly. The manganese dioxide batteries used in the assembly have a total life of 3 years from the date of manufacture.

5. Check records (see OPNAVINST 4790.2 Series) for date of installation of each FLU-8B/P automatic inflator. For date of manufacture, refer to the manufacturer's identification plate each inflator. See figure 16-3 for lot numbering system.

6. Oral inflation valve(s) for cracks, security, ease of operation, and corrosion.

7. Patches for proper adhesion and wear. Refer to paragraph 16-63 for repair instructions.

8. Any other parts for wear or other damage.

9. All hardware for security of attachment, corrosion, damage, wear and, if applicable, ease of operation.

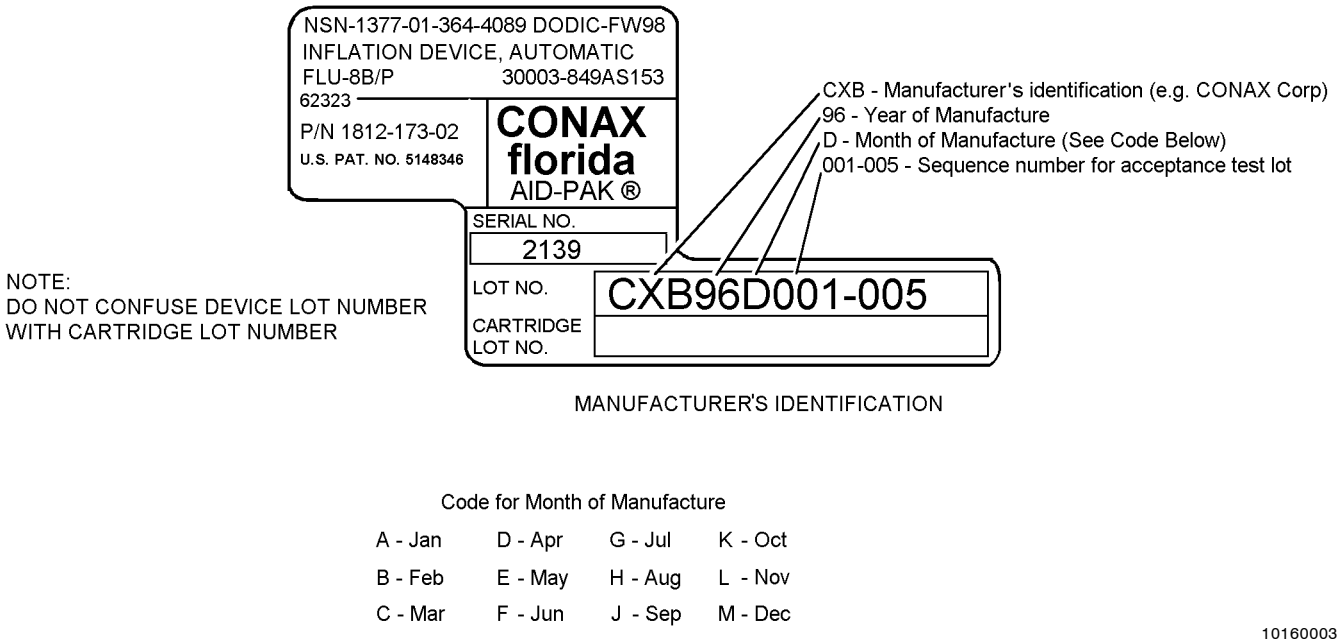

Figure 16-3. Lot Numbering System for FLU-8B/P Automatic Inflators

10. Preservers for stains, dirt, and general cleanliness. Refer to paragraph 16-49 for cleaning instructions.

11. Cross threading and/or loose manifold nuts.

16-39. BATTERY VISUAL INSPECTION. To inspect the batteries installed in the FLU-8B/P inflator, proceed as follows:

Support Equipment Required

Quantity	Description	Reference Number
1	Multimeter (Digital)	8600A or equivalent (CAGE 89536) NIIN 01-010-0088
1	Wrench 3/4-Inch	—

WARNING

No foreign object should be inserted into sensor plug ports for any reason.

1. Remove sensor plug cap using a standard 3/4-inch wrench. See figure 16-4.

2. Remove batteries and check for the following: leakage, corrosion, dents, depressions and cracks. If found, the batteries shall be rejected.

2A. Inspect end of battery insulating sleeve that protrudes from battery compartment for cracks/tears. Replace battery insulating sleeves that have cracks and tears that continue into the battery compartment. Small defects that do not travel into the wall of the battery compartment are acceptable.

3. Check sensor plug cap for cracks.

NOTE

The total service life for the manganese dioxide battery (FW14) is three years from date of manufacture. For date coding information on the FW14 battery, refer to NAVAIR 11-100-1.1. Replace both batteries if life of either battery expires prior to the next calendar inspection.

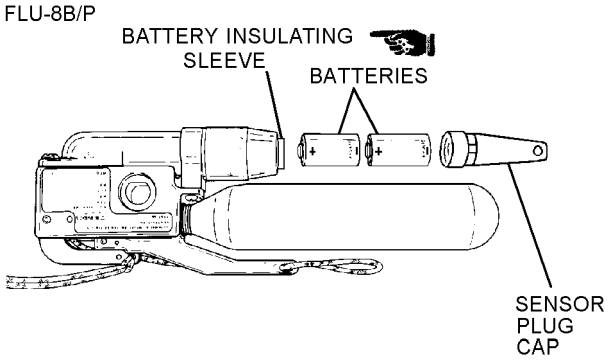

Figure 16-4. Battery Removal

4. Check date of manufacture stamped on the battery. Also check date of installation recorded on records (OPNAVINST 4790.2 Series).

4A. Using multimeter set-up to measure dc voltage, check each battery for shorted casing. Place one lead on the positive terminal and the other on the battery case. If a voltage reading of 0.1 volts dc or higher is obtained, reject the battery for use and discard battery in an appropriate manner.

5. Reinstall or replace batteries if needed. Torque FLU-8B/P sensor plug cap to 15 lb-in using 3/4-inch socket and torque wrench. Ensure that date of installation and date of manufacture are recorded on appropriate form in accordance with OPNAVINST 4790.2 Series. See figure 16-4 for proper battery arrangement and refer to paragraph 16-54 for battery replacement.

16-40. BATTERY VOLTAGE TESTING.

CAUTION

Do not use analog (needle) voltage multimeter. Use digital reading voltage multimeter.

Support Equipment Required

Quantity	Description	Reference Number
1	Multimeter (Digital) (Note 1)	8600A or equivalent (CAGE 89536) NIIN 01-010-0088

Notes: 1. Provide the positive (+) test lead with a standard test probe (1/16-inch size) on a standard handle (3-4-inch nominal length). Provide the negative (-) test lead with a banana type-test plug (1/8-inch size) on a short handle (one-inch nomi nal length). Adjust the tension on the ribs of the banana plug so that when inserted into a sensor plug end port (7/16-inch nominal depth) the weight of the test lead will not withdraw the plug. (Use an undamaged uninstalled sensor plug for verification, not an inflator with batteries installed).

WARNING

Ensure that the multimeter is set in the voltage measuring mode and NOT the resistance measuring mode as a resistance measurement will trigger the squib and fire the inflator. The inflator will also fire with any conductive material making contact from the sensor pin to any conductive surface of the inflator device.

Do not touch the inflator with your bare hands or any conductive material while performing this test. Faulty readings may be obtained, or the squib may be fired if the body becomes an electrical pathway between the sensor pin and any conductive part of the inflator assembly.

1. Insert the negative (-) test probe into the end port of the sensor plug. Remove hand. Using the pointed positive (+) probe, touch and maintain contact with one of the screw heads near the lever-end of the inflator.

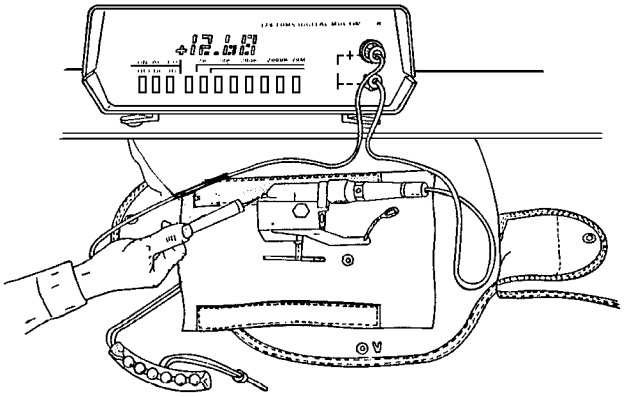

P0040001

Step 1 - Para 16-40

2. Wait 15 seconds for the FLU-8B/P circuits to stabilize after connecting the test leads before taking the voltage reading.

WARNING

The voltage reading should begin at a high value and then gradually shift downward (0.15 volts typical) before final stabilization. If no downward shift in meter reading occurs, or if the shift continues steadily downward more than 1.0 volt during battery test, the FLU-8B/P inflator shall be rejected.

CAUTION

Never replace one battery. Always replace the pair.

3. Interpret battery test readings and respond as indicated below:

a. A reading of +12 volts or more indicates that the batteries are at full power and correctly installed.

b. A reading of -12 volts or more indicates that both batteries are installed backwards. Batteries must be reversed.

c. A reading of zero volts indicates one battery is inserted backwards, battery contact is faulty or batteries are not installed. Inspect and correct.

d. If a correct battery voltage reading cannot be obtained with batteries of verified full charge properly installed, the inflator is defective. Reject and report for engineering investigation according to OPNAVINST 4790.2 Series.

NOTE

The same multimeter and test leads may be used to test batteries singly or in pairs external to the inflator. Voltage readings will be slightly higher and will not drift downward when testing outside the inflator.

4. If batteries need to be rearranged or replaced, refer to paragraph 16-54.

5. After replacing or rearranging batteries, repeat steps 1 and 2.

16-41. MARKINGS INSPECTION. To inspect and restore marking, proceed as follows:

Materials Required

Quantity	Description	Reference Number
As Required	Ink, Marking, Laundry, Black	SPE-92 NIIN 00-161-4229
	-or-	
As Required	Ink, Drawing, Waterproof, Yellow	A-A-59291 NIIN 00-634-6583

1. Compare markings on preserver to those listed in table 16-4.

2. Restore any faded markings.

3. Deleted.

4. Correct any markings which do not agree with the applicable table. Paint out old marking and enter new marking as close to proper position as possible.

16-42. SURVIVAL ITEMS INSPECTION. To inspect survival items, proceed as follows:

1. Inventory all items by checking items against table 16-1. Replace any missing or unsatisfactory item.

NOTE

NAVAIR 13-1-6.5, Rescue and Survival Equipment contains detailed information on the inspection of survival items.

2. Inspect all items for damage, spent contents and expired service life. Replace as necessary.

Table 16-4. LPU-23/P Life Preserver Markings

Marking	Location	Letter Height
CASING, LIFE PRESERVER, LPU-23A/P 1957AS103-302 CONTRACT NO. [applicable number] MANUFACTURER [applicable number] DATE OF MANUFACTURE [month and year] SERIAL NO. [applicable number]	Center of casing waist section (inside)	5/16 inch 3/16 inch
CASING, LIFE PRESERVER, LPU-23B/P 1957AS103-304 CONTRACT NO. [applicable number] MANUFACTURER [applicable number] DATE OF MANUFACTURE [month and year] SERIAL NO. [applicable number]	Center of casing waist section (inside)	5/16 inch 3/16 inch
DYE MARKER	Pouch (right side)	1/2 inch
FLARES	Pouch (left side)	1/2 inch
LIFE PRESERVER LPU-23/P SERIES SPEC. MIL-L-81561 CONTRACT NO. [applicable number] MANUFACTURER [name of manufacturer] DATE OF MANUFACTURE [month and year] SERIAL NO. [applicable number]	Center of flotation tube waist section	5/16 inch 3/16 inch
LIFE PRESERVER INFLATABLE, AUTOMATIC LPU-23A/P PART NO. 68A73H1-102 **WARNING** AUTOMATIC INFLATION DEVICE INSTALLED FOR USE IN EJECTION SEAT AIRCRAFT ONLY	Center of casing waist section (inside)	3/16 inch 1/4 inch 3/16 inch
LIFE PRESERVER INFLATABLE, AUTOMATIC LPU-23B/P PART NO. 68A73H1-104 **WARNING** AUTOMATIC INFLATION DEVICE INSTALLED FOR USE IN EJECTION SEAT AIRCRAFT ONLY	Center of casing waist section (inside)	3/16 inch 1/4 inch 3/16 inch

Table 16-4. LPU-23/P Life Preserver Markings (Cont)

Marking	Location	Letter Height
WARNING AUTOMATIC INFLATION DEVICE INSTALLED FOR USE IN EJECTION SEAT AIRCRAFT ONLY	Right and Left side of waist casing (outside) collar lobe casing (outside)	1/4 inch 3/16 inch
Notes: 1. Replacement markings shall be stamped or stenciled using waterproof black ink.		

3. Operate all items which are not intended for one-time use. Replace as necessary.

16-43. INFLATION ASSEMBLY INSPECTION. To inspect life preserver inflation assemblies, proceed as follows:

1. Remove CO_2 cylinder locking screws, if present, and remove CO_2 cylinders from valve assembly.

2. Examine inflation device, actuating lever and lanyard, and locking pins for fraying, corrosion, stripped threads, and other damage.

3. If required, remove any sharp edges from valve with a fine round file.

4. Operate actuating lever several times. Ensure that lever moves freely and ensure that piercing pin moves properly inside valve body. Inspect point of piercing pin for serviceability. If point is flat, rounded, dull, or otherwise worn or damaged, replace inflation assembly.

5. Ensure that packaging cord loop is not pinched between piercing pin and actuating lever. If there is free play in the actuating lever when it is in its cocked position, the packaging cord loop is pinched. If necessary, reinstall in accordance with paragraph 16-76.

NOTE

Each time inflation assembly gaskets or inflation assembly is removed and replaced for any reason, a functional test shall be conducted. Refer to paragraph 16-33. Use new gaskets when replacing device.

6. If any discrepancy is noted in device that is not repairable in accordance with paragraph 16-58, remove assembly and install a new inflation device.

7. If CO_2 cylinder locking screws were installed, discard them.

16-44. BEADED INFLATION HANDLE PULL TEST. To perform the beaded inflation handle pull test, proceed as follows:

Support Equipment Required

Quantity	Description	Reference Number
1	Gage, Dial, Push/Pull, 0 to 50 lb	DPPH50 (CAGE 11710) or equivalent NIIN 00-473-0108

1. Ensure that CO_2 cylinders have been removed. Actuate the inflator assembly. All snap fasteners on beaded inflation handle must be fully engaged.

2. Attach gage to webbing between third and fourth bead on inflation handle.

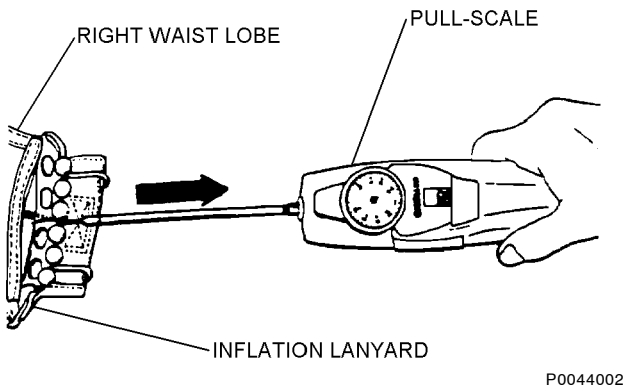

Step 2 - Para 16-44

3. Hold inflator steady. Slowly exert up to a 25-pound straight pull on webbing. All snap fasteners should release at or before 25 pounds.

4. If all snap fasteners do not release at or before the 25 pound limit, inspect the male and female snap fasteners for damage. Replace the entire beaded inflation handle assembly if required and repeat steps 1 through 4.

5. If the snap fasteners release properly, leave the pull scale attached, add an additional 25 pound force to check the security of the beaded handle attachment to the inflation lanyard. Examine the lanyard for frays, ruptures, thin spots, split casing and security of stitches and knots. If unsatisfactory, replace the entire beaded inflation handle. Refer to paragraph 16-74.

6. Ensure that packaging cord loop is not pinched between piercing pin and actuating lever. If there is free play in the actuating lever when it is in its cocked position, the packaging cord loop is pinched. If necessary, reinstall in accordance with paragraph 16-76.

16-45. LEAKAGE TEST. All life preservers shall be subjected to a leakage test each Calendar/Phase Inspection. To perform a leakage test proceed in accordance with paragraph 16-47.

16-46. Test Fixture. A suggested test fixture, consisting of a three-way valve, pressure gage, and adapters for compartments being tested, is shown in Chapter 3. Fixtures must be fabricated to meet the requirements of the schematic shown in figure 16-5.

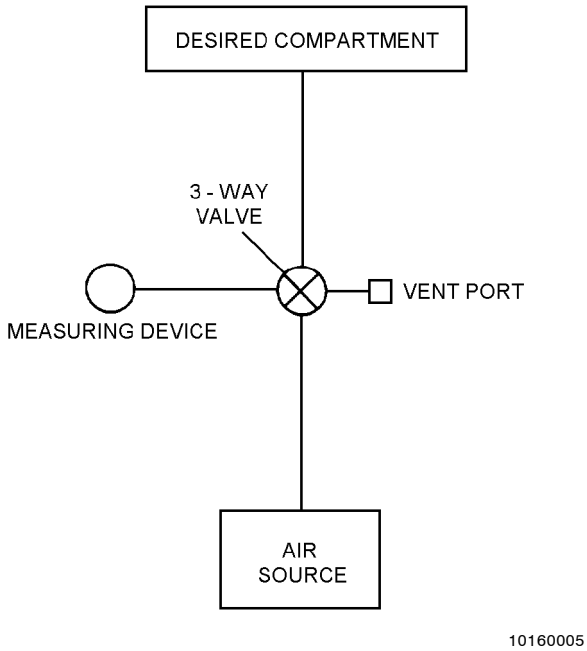

Figure 16-5. Test Fixture Schematic

16-47. Test Procedure. To test life preservers, proceed as follows:

Support Equipment Required

Quantity	Description	Reference Number
1	Test Fixture (or equivalent)	See Chapter 3

CAUTION

Ensure test area is free of foreign objects.

1. Ensure all carbon dioxide has been removed from any preserver which has been functionally tested.

CAUTION

If 3-way valve is not used, measuring device valve must be closed when air feed valve is open.

Damage may occur to oral inflation valve if air supply pressure entering the life preserver exceeds ten (10) psi during this test.

NOTE

If a suitable air source is not available, water-pumped nitrogen (BB-N-411) may be substituted.

2. Unlock oral inflation valve and insert into rubber hose. Rotate valve to air supply position and inflate chamber. Alternately position valve between measuring device, vent and air supply until proper pressure of 2.0 psig is attained in both chambers.

3. The air supply shall be securely shut off and after a minimum of 15 minutes, the pressures shall be readjusted, if necessary, to the leakage test pressures. Record time.

4. Disconnect air supply and check for leaks. Ensure all valves are closed.

5. Record temperature and barometric pressure.

6. After a minimum of 4 hours after completing step 3, record test pressure of both chambers. Test pressure shall not decrease to less than 1.6 psig for a life preserver chamber, from a maximum test pressure of 2.0 psig.

7. Record temperature and barometric pressure and correct test pressure for any changes in temperature and barometric pressure. Refer to tables 16-5 and 16-6.

EXAMPLE

UNCORRECTED TEST READING 1.70 PSI

	TEMP.	BARO.
START	75° F	29.90 IN. Hg
END	70° F	29.70 IN. Hg
DIFFERENCE	- 5° F	-0.20
CORRECTION	+0.155	-0.098

TEMP. CORRECTION	+ 0.155
+ BARO. CORRECTION	- 0.098
CORRECTION	+ 0.057

UNCORRECTED READING	1.700 PSI
+ CORRECTION	+ 0.057
CORRECTED READING	1.757 PSI

P0047007

Step 7 - Para 16-47

Table 16-5. Temperature Conversion Chart

Temperature Difference (°F)	Correction (psi)
1	0.031
2	0.062
3	0.093
4	0.124
5	0.155
6	0.186
7	0.217
8	0.248
9	0.279
10	0.310
Rise in temperature: subtract from gage reading. Fall in temperature: add to gage reading.	

8. If pressure of chamber is below 1.6 psig inflate to leakage test pressure and coat with a soap solution to locate leaks. Mark leak areas. Rinse preserver with fresh water, air dry and repair in accordance with paragraph 16-62.

9. Deflate preserver in accordance with paragraph 16-34.

Table 16-6. Barometric Pressure Conversion Chart

Press. Diff. (inHG)	Corr. (psi)	Press. Diff. (inHG)	Corr. (psi)	Press. Diff. (inHG)	Corr. (psi)	Press. Diff. (inHG)	Corr. (psi)	Press. Diff. (inHG)	Corr. (psi)
0.01	0.005	0.16	0.078	0.31	0.152	0.46	0.225	0.61	0.299
0.02	0.010	0.17	0.083	0.32	0.157	0.47	0.230	0.62	0.304
0.03	0.015	0.18	0.088	0.33	0.162	0.48	0.235	0.63	0.309
0.04	0.020	0.19	0.093	0.34	0.167	0.49	0.240	0.64	0.314
0.05	0.025	0.20	0.098	0.35	0.172	0.50	0.245	0.65	0.319
0.06	0.030	0.21	0.103	0.36	0.176	0.51	0.250	0.66	0.323
0.07	0.035	0.22	0.108	0.37	0.181	0.52	0.254	0.67	0.328
0.08	0.040	0.23	0.113	0.38	0.186	0.53	0.260	0.68	0.333
0.09	0.045	0.24	0.118	0.39	0.191	0.54	0.265	0.69	0.338
0.10	0.049	0.25	0.123	0.40	0.196	0.55	0.270	0.70	0.343
0.11	0.054	0.26	0.127	0.41	0.201	0.56	0.275	0.71	0.348
0.12	0.060	0.27	0.132	0.42	0.206	0.57	0.279	0.72	0.353
0.13	0.064	0.28	0.137	0.43	0.211	0.58	0.284	0.73	0.358
0.14	0.069	0.29	0.142	0.44	0.216	0.59	0.289	0.74	0.363
0.15	0.073	0.30	0.147	0.45	0.221	0.60	0.294	0.75	0.368

Rise in pressure: add to gage reading.
Fall in pressure: subtract from gage reading.

10. Ensure that inflation valve lever is cocked. Install CO_2 cylinder in accordance with paragraph 16-53.

16-48. RECORDS UPDATING. Make necessary entries on appropriate form in accordance with OPNAVINST 4790.2 Series.

16-49. CLEANING AND SERVICING.

16-50. GENERAL. Cleaning and servicing consist of cleaning the life preserver, case, container and/or pouch, installation of the inflation valve protective covers and CO_2 cylinders and, when required, safety wiring of the inflation valve actuating lever.

16-51. CLEANING OF LIFE PRESERVER CASINGS/BLADDERS. To clean life preservers, machine washing is preferred on casings, containers, and pouches. Alternate method is by hand. Remove any survival items and other detachable items and proceed as follows:

Materials Required

Quantity	Description	Reference Number
As Required	Detergent, General Purpose	MIL-D-16791 NIIN 00-282-9699
As Required	Cloth, Lint-Free, Type II	MIL-C-85043 NIIN 00-044-9281
As Required	Talc, Technical	MIL-T-50036A NIIN 01-080-9589

CAUTION

Solvents are not to be used in cleaning life preservers.

1. Prepare solution of detergent (MIL-D-16791) consisting of 1/4 to 1/2 ounce of detergent per gallon of water.

2. Apply cleaning solution to soiled area with a spray or sponge.

3. Allow solution to remain on surface for several minutes, then agitate with a soft brush or rag.

4. Rinse surface thoroughly with water; wipe with a cloth or sponge. Repeat this application until surface is free from all solution.

5. Dry casing before use and dry bladder with a lint-free cloth (MIL-C-85043). Apply a light coating of talc (MIL-T-50036A).

16-52. INSTALLATION OF INFLATION VALVE PROTECTIVE COVERS. To install inflation valve protective covers, proceed as follows:

1. Open life preserver flotation assembly, then position on a flat surface.

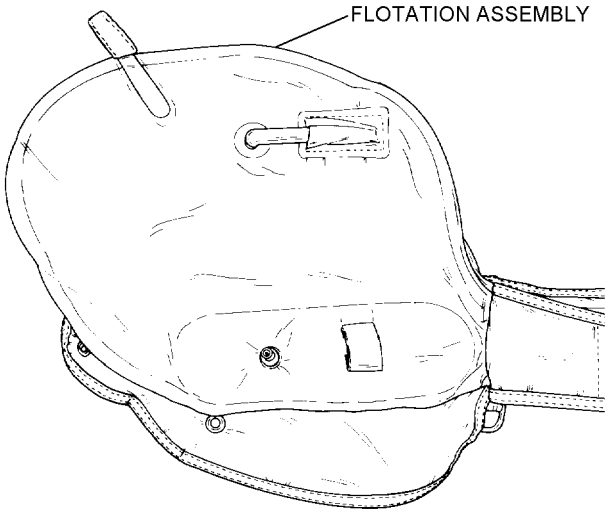

NOTE: Inflator not shown for clarity.

P0052001

Step 1 - Para 16-52

2. Place inflation valve protective cover upon the life preserver. Ensure that inlet manifold stem hole and CO_2 cylinder holding loop hole are aligned according to figure 16-6.

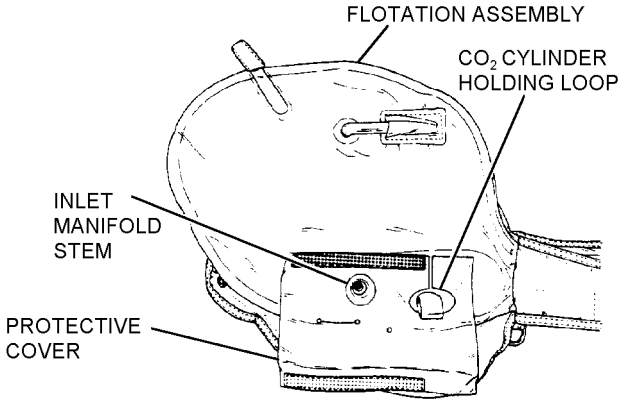

NOTE: Inflator not shown for clarity.

10160006

Figure 16-6. Installation of Inflation Valve Protective Cover

16-53. INSTALLATION OF CO_2 CYLINDERS. To install CO_2 cylinders proceed as follows:

Support Equipment Required

Quantity	Description	Reference Number
1	Scale (Gram)	A-A-52021-1 NIIN 00-514-4117 or equivalent
1	Die, Cylinder Thread Chaser	1842-008-01 (CAGE 03688) NIIN 00-069-4040

Materials Required

Quantity	Description	Reference Number
As Required	Cylinder, CO_2 Type III, 35-Gram	MIL-C-25369
As Required	Seat Seal, O-Ring, Multi	NIIN 01-046-3300

CAUTION

Ensure that packaging cord is not pinched between piercing pin and actuating lever. If there is free play in actuating lever when in its cocked position, packaging cord loop is pinched. If necessary, reinstall in accordance with paragraph 16-76.

NOTE

During intermediate inspection, inspect condition of O-ring and replace as necessary. After each functional inspection, the O-ring seal shall be replaced.

1. Weigh a charged CO_2 cylinder and compare the minimum stamped weight with the scale weight. Discard and replace cylinder if scale weight is 2 grams less than minimum stamped weight.

2. The proper configuration of an inflator assembly is a FLU-8B/P and a CO_2 Cylinder, MIL-C- 25369, Type III, 35 gram, NIIN 00-077-8773.

3. To assure a firm cylinder seat, conduct a cylinder thread count. Threaded portion of cylinder neck shall contain a minimum of seven full threads to assure a firm cylinder seat within valve body. Any cylinder found with less than seven full threads shall be discarded. See figure 16-7.

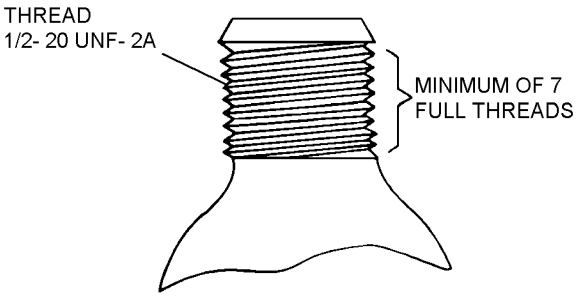

10160007

Figure 16-7. Cylinder Thread Count

CAUTION

Steel threads on CO_2 cylinder can cause damage to aluminum threads on inflator if cylinder is not carefully threaded. If binding occurs during installation on cylinder, use thread chaser dye on cylinder thread to cut free excessive plating. Reinstall cylinder. If binding still occurs, replace cylinder.

4. Using the cylinder thread chaser die, turn the thread chaser to the full extent of the threads on the CO_2 cylinder to cut free any excessive plating covering the threads.

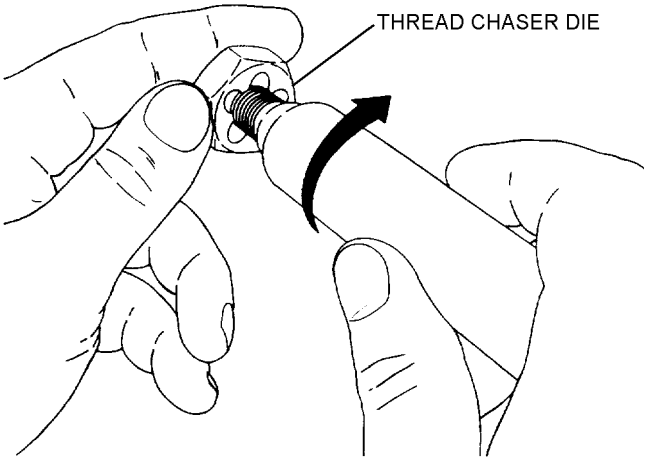

P0053004

Step 4 - Para 16-53

NOTE

During intermediate inspection, inspect condition of O-ring and replace as necessary. After each functional inspection, the O-ring seal shall be replaced.

5. Insert new O-ring and turn CO_2 cylinder into inflator body as far as hand twisting will permit. See figure 16-8.

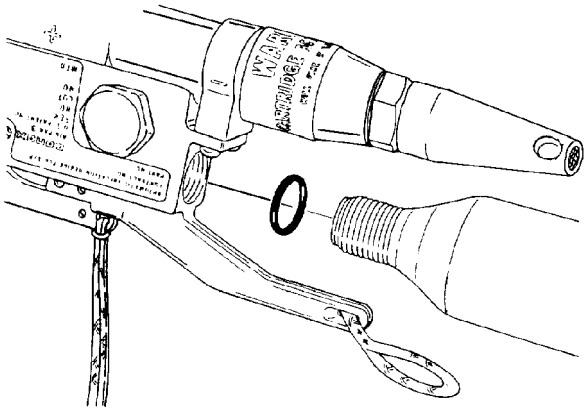

10160008

Figure 16-8. Inserting New O-ring and CO_2 Cylinder

NOTE

Check for secure cylinder fit and ensure that CO_2 cylinder passes through the CO_2 cylinder holding patch loop.

6. Close inflation valve protective covers; then secure with hook and pile tape provided.

16-54. BATTERY REPLACEMENT. To replace batteries, proceed as follows:

NOTE

Only FW14 batteries, part number 849AS103, NIIN 01-334-0724, requisitioned through the CAD/PAD ordering process are authorized for use in the FW98 Automatic Inflation Device. NAVSURFWARCENDIV Indian Head MD must approve substitute batteries in writing before installation.

Materials Required

Quantity	Description	Reference Number
2	Battery, 6-Volt Manganese Dioxide	849AS103 NIIN 01-334-0724 (FW14)

Support Equipment Required

Quantity	Description	Reference Number
1	Multimeter (Digital)	8600A or equivalent (CAGE 89536) NIIN 01-010-0088
1	Wrench, 3/4-Inch	—

WARNING

No foreign object should be inserted into sensor plug ports for any reason.

1. Remove sensor plug cap using a standard 3/4-inch wrench.

WARNING

Battery may explode if recharged or disposed of in fire.

CAUTION

Never replace one battery. Always replace the pair.

2. Remove old batteries and discard.

3. Refer to NAVAIR 11-100-1.1 for battery manufacture code dates. Record date of manufacture and date of installation of new batteries in accordance with OPNAVINST 4790.2 Series.

NOTE

Manganese Dioxide batteries (FW14) have a life of three years from the date of manufacture. Do not install battery if its life expires prior to the next scheduled Calendar Inspection.

3A. Check new batteries for leakage, corrosion, dents, depressions, and cracks. If found, the batteries shall be rejected.

3B. Using multimeter set-up to measure dc voltage check each battery for shorted casing. Place one lead on the positive terminal and the other on the battery case. If a voltage reading of 0.1 volts dc or higher is obtained reject the battery for use and discard battery in an appropriate manner.

4. Install batteries in accordance with figure 16-9.

5. Install sensor plug cap. Plug shall be held in square alignment with housing while engaging threads.

WARNING

Ensure that sensor plug cap is torqued to correct value. Do not overtighten sensor plug cap.

6. Torque FLU-8B/P sensor plug cap to 15 in-lbs, using 3/4-inch socket and torque wrench.

7. Test batteries in accordance with paragraph 16-40.

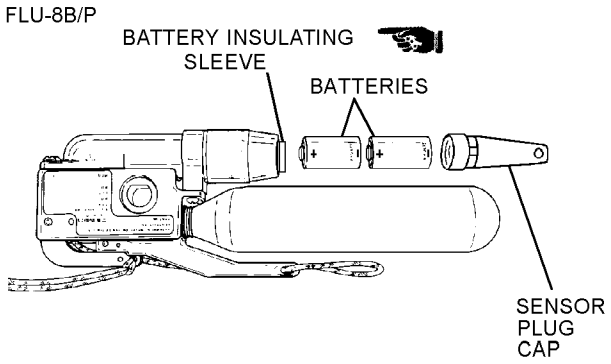

Figure 16-9. Battery Arrangement

16-55. REPAIR/REPLACEMENT.

16-56. This section contains instructions for the repair or modification of various components or subassemblies of life preservers to ensure that appropriate items of equipment remain in Ready For Issue (RFI) status. Reference numbers for parts which are defective, corroded or worn and require replacement are included in the applicable paragraph of this section. Other replacement parts, such as carrying cases and personal survival equipment, are listed in the applicable table of each chapter. Procedures are applicable to the type life preserver described in parentheses following the title of the repair or modification, or before a step.

16-57. Replacement of easily removed assembly components such as CO_2 inflation valves and survival items are authorized in addition to repair and replacement procedures documented in this section. The life preserver shall be subjected to a functional and leakage test each time CO_2 inflation valves are removed and replaced for any reason, and each time inflation valve gaskets are replaced.

16-58. DETERMINATION OF REPAIRABILITY. Patching of holes, cuts, tears or punctures 1-inch square or less are the only repairs authorized in a life preserver bladder.

16-59. Life preserver shall be considered beyond repair for any of the following reasons:

1. Porous fabric areas on flotation bladder.

2. Split or open bladder seams with the exception of non-leaking bladder fin seams.

3. Leakage test failure resulting from other than repairable cut, tear or puncture.

4. Holes, cuts, tears or punctures within 1-inch of flotation bladder seams.

5. Deterioration of the rubberized fabric caused by oil, grease, or any other foreign substance.

6. Deterioration of the rubberized fabric caused by a heavily mildewed condition.

16-60. CASING REPAIR PROCEDURES. To repair casings, proceed as follows:

Materials Required

Quantity	Description	Reference Number
As Required	Thread, Nylon, High Temperature Resistant, Sage Green	MIL-T-83193 NIIN 00-405-2252
	-or-	
As Required	Thread, Nylon, Type II, Size E, Sage Green	V-T-295 NIIN 00-204-3884
As Required	Cloth, Nylon, Polychlororprene-coated, Type I, Sage Green	MIL-C-83429 NIIN 01-147-2064
As Required	Tape, Hook, Sage Green, Type II	MIL-F-21840 NIIN 00-405-2266
As Required	Tape, Pile, Sage Green, Type II	MIL-F-21840 NIIN 00-405-2263

1. Minor holes, rips, tears, or abrasions in casing assembly may be repaired if they do not exceed 2 inches.

2. Repair or replace loose or damaged hook and pile tape as required.

3. Remove bladder in areas being repaired.

4. For all repairs plus loose or broken stitching use 6 to 8 stitches per inch and back stitch one half inch.

5. Casing assembly worn beyond economical repair shall be discarded.

16-61. CASING GROMMET REPLACEMENT PROCEDURES. To replace casing grommet, proceed as follows:

Support Equipment Required

Quantity	Description	Reference Number
1	Punch, Cutting, 3/16″	3GGG-P-833 NIIN 00-180-0941
1	Pencil, Solder	W-S-570 NIIN 00-204-3855

Materials Required

Quantity	Description	Reference Number
1″	Tape, Nylon, Sage Green, 1″ Wide	MIL-T-5038 NIIN 00-753-6144
	-or-	
1 1/2″ X 1 1/2″	Cloth, Aramid, Sage Green, Type 456, Class I	MIL-C-83429 NIIN 01-147-2064
2	Grommet, Brass, Size 00	MS202030B20 NIIN 00-291-0302

1. Remove bladder in areas being repaired.

2. Remove loose grommet.

3. Reinforce worn grommet hole in casing by using either nylon tape or aramid cloth.

a. Prepare reinforcing material.

(1) Cut and sear edges of a 1″ piece of nylon tape

or

(2) Cut a 1 1/2″ X 1 1/2″ piece of aramid cloth and fold under 1/4″ on all edges.

b. Sew reinforcing material to outside of casing, centered where possible over original grommet location. Use a cross boxstitch with 6 to 8 stitches per inch, 1/8 inch from edge.

4. Install new grommet.

a. Locate original grommet hole. Cut hole in reinforcing material using 3/16″ cutting punch.

b. (For nylon tape only.) Carefully sear hole to prevent fraying using solder pencil.

c. Install grommet using 00 grommet setter and base.

16-62. CEMENTING LIFE PRESERVERS. All cementing of life preservers shall be performed as follows:

Support Equipment Required

Quantity	Description	Reference Number
1	Roller, Wooden	GGG-R-00620 NIIN 00-243-9401

NOTE

Toluene shall be the primary solvent used in the fabrication or repair of this assembly. MEK may be used if toluene is not available. Always use solvents sparingly and wipe up excess solvents; do not allow to dry by evaporation.

Materials Required

Quantity	Description	Reference Number
1	Brush, Disposable	NIIN 00-514-2417
As Required	Toluene	TT-T-548 NIIN 00-281-2002
	-or-	
As Required	Methyl Ethyl Ketone (MEK)	TT-M-261 NIIN 00-281-2762
As Required	Cement, Class 3, Polychloroprene	MIL-A-5540 NIIN 00-142-9913
As Required	Talc, Technical	MIL-T-50036A NIIN 01-089-9589

WARNING

Do not use toluene or MEK near open flame, heat or electrical sparks. Avoid prolonged contact with skin or breathing of fumes. Use only in a well ventilated area.

CAUTION

Use only Polychloroprene adhesives and Polychloroprene-coated cloth patches on Polychloroprene-coated LPU-23/P flotation assemblies.

NOTE

Toluene or MEK must be applied vigorously to life preserver material over three years old in order to reactivate the material prior to cementing. Pigment from the material coloring staining a cloth rubbed over the treated surface will indicate the material has been reactivated. Cement shall be applied immediately after the surface has dried.

1. Clean both surfaces to be cemented with four applications of toluene or MEK. Apply toluene or MEK with back-and-forth strokes on the first and third applications, and one-way strokes on the second and fourth applications. Allow area to dry between applications.

CAUTION

The effective active period of adhesive mixtures composed of polychloroprene and an accelerator is eight (8) hours. Do not use mixture if older than eight hours.

2. Prepare only enough mixture for 8 hours. Dispose of any remaining mixture.

3. Using a disposable brush, apply cement to completely cover surfaces to be cemented. Use long, one direction strokes and complete each surface before cement becomes tacky as the brush may pull tacky cement from the surface. Allow to dry for 10 minutes.

4. Apply a second coat of cement as in step 3. Use brush strokes perpendicular to the original direction.

5. When second coat of cement has become tacky, place pieces together. If cemented area has a cut or tear, butt edges of damage before applying patch. Roll out bubbles with a wooden roller.

6. Allow cement to cure a minimum of 48 hours.

7. Dust area with talc (MIL-T-50036A).

16-63. PATCHING LIFE PRESERVERS. Patching of life preservers shall be performed as follows:

NOTE

Life preserver is not repairable if it has holes, cuts, tears, or punctures over one inch square.

Materials Required

Quantity	Description	Reference Number
As Required	Cloth, Nylon, Polychloroprene-coated, Type I, Sage Green	MIL-C-19002 NIIN 00-935-1759

CAUTION

Use only Polychloroprene adhesives and Polychloroprene-coated cloth patches on Polychloroprene-coated LPU-23/P flotation assemblies.

NOTE

Select patch color as near as possible to color of life preserver being repaired.

1. Cut a rounded patch 1 inch larger than damage on all sides.

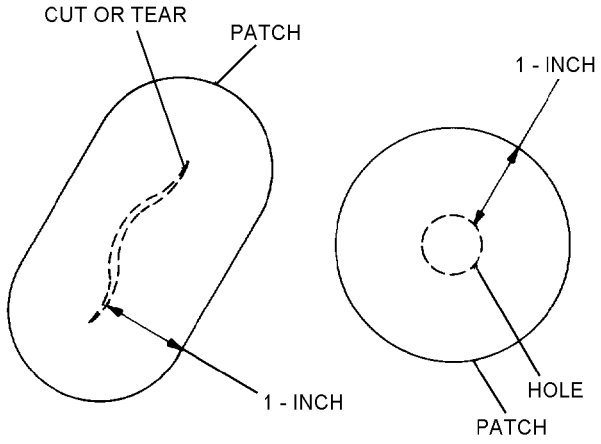

P0063001

Step 1 - Para 16-63

2. Center patch over damage and trace an outline of patch on fabric.

3. Cement patch to damaged area in accordance with paragraph 16-62.

4. Dust area with talc (MIL-T-50036A).

5. Perform a leakage test.

16-64. INSPECTION RECORD PATCH.

NOTE

The 28th In-Service Management Panel meeting for Aviation Life Support Systems rescinded the requirement for the packer to sign the Inspection Record Patch on life preservers. The requirement for all documentation remains unchanged. The reason for this change is that most history patches are unreadable and the packer's and inspector's names are documented on Aviation Crew Systems Records.

Figure 16-10 Deleted.

16-65. REPLACEMENT OF ORAL INFLATION VALVE. To replace the oral inflation valve, proceed as follows:

NOTE

Replacement oral inflation valves can only be obtained through salvage of BCM'ed or surveyed inflatable survival equipment.

Materials Required

Quantity	Description	Reference Number
1	Valve, Oral Inflation	—
As Required	Cement, Polychloroprene	MIL-A-5540 NIIN 00-142-9913
As Required	Brush, Disposable	NIIN 00-514-2417

Materials Required (Cont)

Quantity	Description	Reference Number
As Required	Toluene	TT-T-548 NIIN 00-281-2002
	-or-	
As Required	Methyl Ethyl Ketone (MEK)	TT-M-261 NIIN 00-281-2762

CAUTION

Only toluene or MEK shall be used to clean oral inflation valve and tube. Only Polychloroprene cement (MIL-A-5540, NIIN 00-142-9913) shall be used to cement oral inflation valve into oral inflation tube.

1. Carefully cut through metal clamp securing oral inflation valve to oral inflation tube, and remove the metal band and oral inflation valve.

2. If the oral inflation tube was damaged during removal of valve, trim off damaged section.

3. Clean both surfaces to be cemented with toluene or MEK. Allow areas to dry.

4. Using a small disposable brush, carefully apply a small amount of Polychloroprene cement to the surfaces to be cemented together.

5. Immediately place oral inflation valve into oral inflation tube. Oral inflation valve should be inserted up to the valve shoulder. Inspect for proper application/cement.

6. Tightly wrap the cemented portion of the oral inflation tube with cord or wire and allow to cure for 48 hours before removing wrap.

7. Perform leakage test in accordance with paragraph 16-45.

16-66. RECEMENTING OF BLADDER FIN SEAMS. This repair shall be performed only if a polychloroprene flotation bladder does not leak, that is, if only outer seam around bladder is split or separating. To recement an open fin seam proceed as follows:

1. If fin seam is not leaking, recement open material surrounding flotation bladder in accordance with paragraph 16-62.

2. Perform a leakage test in accordance with paragraph 16-45.

NOTE

If bladder exhibits leakage from fin seam, "V" tape on inside of bladder cell has ruptured. Dispose of life preserver after usable parts have been salvaged.

16-67. DELETED

Figure 16-11. Deleted

16-68. FABRICATION OF SLIP-ON POCKETS FOR LIFE PRESERVER HARDWARE. To fabricate slip-on pockets for life preserver hardware, proceed as follows:

Materials Required

Quantity	Description	Reference Number
As Required	Cloth, Nylon, Polychloroprene-coated, Type I	MIL-C-19002 NIIN 00-935-1759
As Required	Thread, Nylon Size E	V-T-295 NIIN 00-204-3884

1. Cut two pieces of coated nylon cloth as shown.

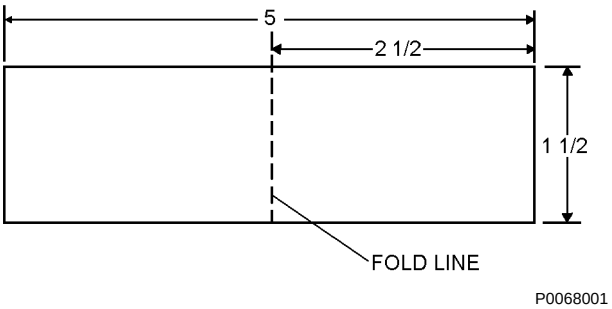

Step 1 - Para 16-68

2. Fold piece of cloth in half along fold line.

3. Sew two sides adjacent to fold forming a pocket. Use stitch type 301 stitching 8 to 10 stitches per inch.

4. Repeat steps 2 and 3 for other piece of cloth.

5. When packing life preserver, slip pockets over applicable pieces of hardware.

16-69. REPLACEMENT OF FLARE AND DYE MARKER POUCH SNAPHOOKS. To replace a broken snaphook, proceed as follows:

Materials Required

Quantity	Description	Reference Number
12 inches	Cord, Nylon, Type I	MIL-C-5040 NIIN 00-014-6690

1. Cut through ring portion of snaphook.

2. Remove snaphook and discard.

3. Pass end of cord through webbing loops on pouch and preserver ring.

4. Secure cord ends with binder knot, cut excess cord, and sear ends.

16-70. REPLACEMENT OF COLLAR LOBE SNAPHOOKS. To replace the collar lobe snaphook or webbing which is attached to the snaphook, proceed as follows:

Materials Required

Quantity	Description	Reference Number
As Required	Cloth, Nylon, Polychloroprene-coated, Type I	MIL-C-19002 NIIN 00-935-1759
As Required	Webbing, Textile, Woven Nylon, Type Ia, 3/4-inch	MIL-W-4088H NIIN 00-782-3224

Materials Required (Cont)

Quantity	Description	Reference Number
2	Snaphook, CWBC1	MIL-S-43770/1 NIIN 01-087-9402
As Required	Thread, Nylon, Size E, Type I or II	V-T-295 NIIN 00-204-3884
As Required	Adhesive, Polychloroprene	MIL-A-5540 NIIN 00-515-2246
As Required	Toluene	TT-T-548 NIIN 00-281-2002
	-or-	
	Methyl Ethyl Ketone (MEK)	TT-M-261 NIIN 00-281-2762
As Required	Talc, Technical	MIL-T-50036A NIIN 01-080-9589

NOTE

Procedural step 1 is for replacement of worn webbing and broken snaphook. Step 2 is for replacement of the snaphook patch assembly.

1. To replace worn webbing and broken snaphook, proceed as follows:

a. Cut original attachment webbing at point where it passes through eye of snaphook and sear ends.

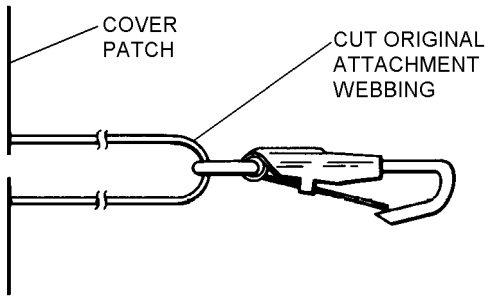

P007001A

Step 1a - Para 16-70

b. Replace original snaphook with copper alloy wire snaphook.

c. Cut one 2-inch length and one 1 1/2-inch length of nylon webbing and sear ends.

d. Pass the 1 1/2-inch length of webbing through snaphook eye and stitch one row of stitching, 10 to 12 stitches per inch, close to seared ends, securing chafing webbing to snaphook eye.

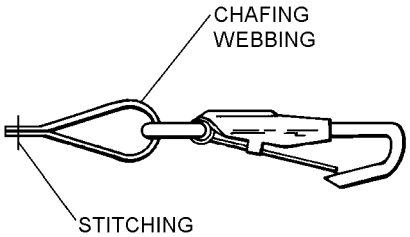

P007001D

Step 1d - Para 16-70

e. Pass the 2-inch length of webbing (replacement webbing) through snaphook eye and over chafing webbing.

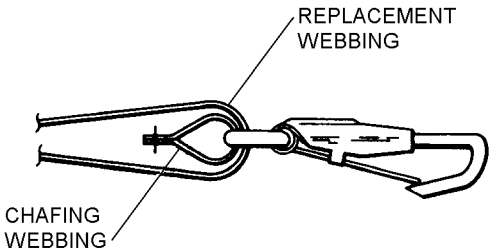

P007001E

Step 1e - Para 16-70

f. Sandwich each side of original webbing between chafing webbing and replacement webbing. Stitch across webbing and backstitch forming three rows of stitching. The finished length of new webbing attachment shall be approximately 1 inch.

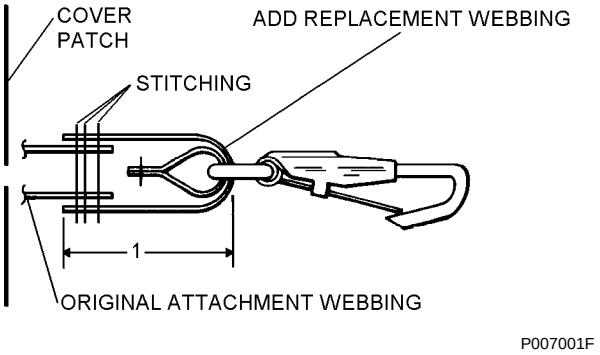

Step 1f - Para 16-70

g. Repeat steps a through f for opposite side.

2. To replace the snaphook patch assembly, proceed as follows:

WARNING

Do not use toluene or MEK near open flame, heat, or electrical sparks. Avoid prolonged contact with skin or breathing of fumes. Use only in well-ventilated area.

NOTE

Toluene shall be the primary solvent used in the fabrication or repair of this assembly. MEK may be used if toluene is not available. Always use solvents sparingly and wipe up excess solvents; do not allow to dry by evaporation.

a. Apply toluene or MEK to loosen patches. Remove patches from life preserver flotation bladder.

CAUTION

Use Polychloroprene-coated adhesives and Polychloroprene-coated cloth and patches on Polychloroprene-coated LPU-23/P life preserver assemblies.

b. Fabricate cover patch from coated nylon cloth.

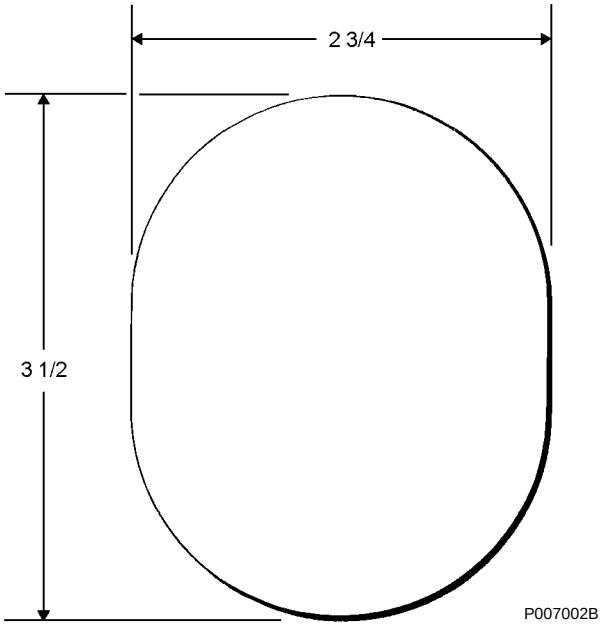

Step 2b - Para 16-70

c. Fabricate base patch from coated nylon cloth.

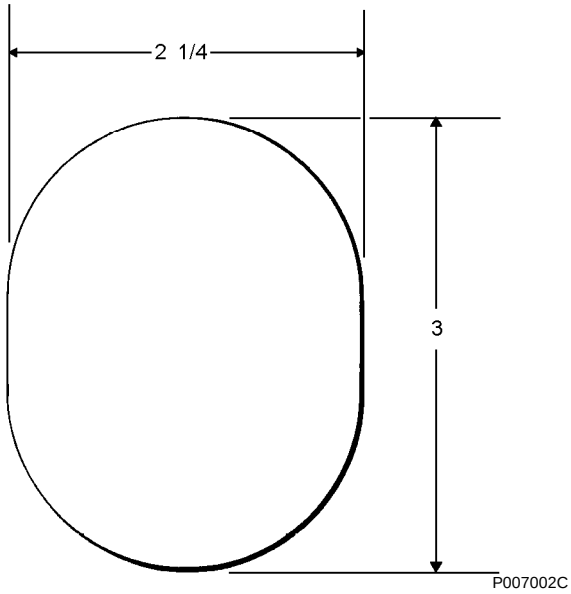

Step 2c - Para 16-70

d. Cut a 1/16 x 3/16-inch slot in cover patch.

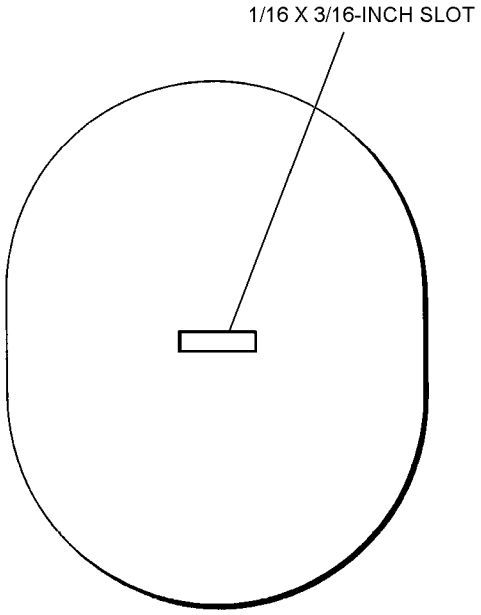

P007002D

Step 2d - Para 16-70

e. Cut one 2 1/2-inch length and one 1 1/2-inch length of nylon webbing and sear ends.

f. Pass the 1 1/2-inch length of webbing through snaphook eye and stitch one row of stitching, 10 to 12 stitches per inch, close to seared ends, securing chafing webbing to snaphook eye.

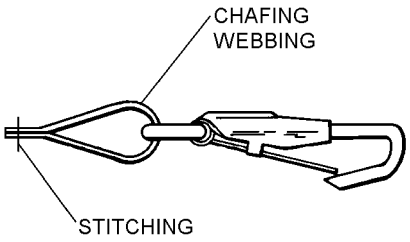

P007002F

Step 2f - Para 16-70

g. Pass 2 1/2-inch length of webbing through snaphook eye and over chafing webbing.

h. Sew a single row of stitching across webbing approximately 5/8 inch from end of webbing.

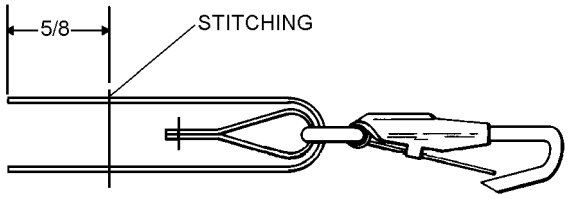

P007002H

Step 2h - Para 16-70

j. Insert webbing through slot opening in cover patch and sew a 7/16 x 5/8-inch boxstitch on each end of webbing to base patch.

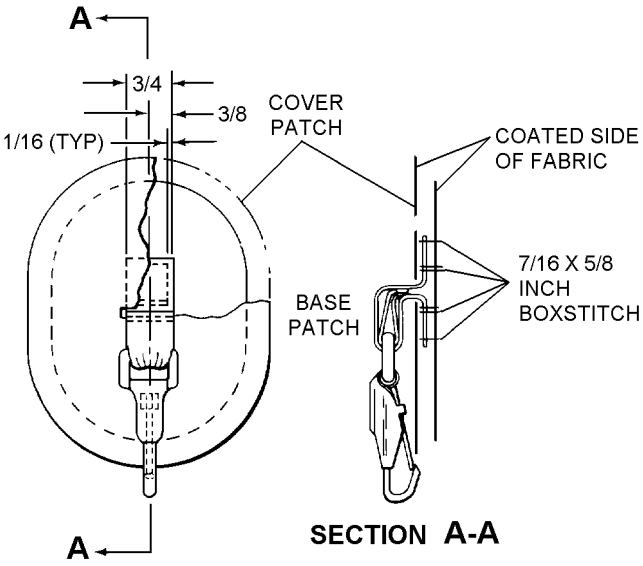

P007002J

Step 2j - Para 16-70

k. Cement cover patch to base patch in accordance with paragraph 16-62.

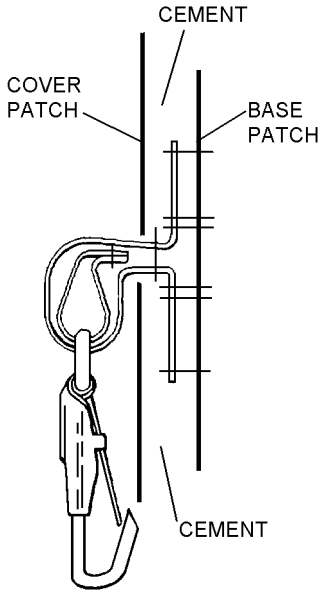

P007002K

Step 2k - Para 16-70

l. Cement base patch to collar lobe on life preserver in accordance with paragraph 16-62.

m. Dust area with talc.

n. Repeat steps a through m for opposite side.

16-71. FLARE POUCH REPAIR. To repair flare pouch which will not close or is extremely difficult to close with flares installed, proceed as follows:

Materials Required

Quantity	Description	Reference Number
As Required	Thread, Nylon, Size E	V-T-295 NIIN 00-204-3884
2	Socket, Snap Fastener	MS27983-2 NIIN 00-945-2577
2	Cap, Snap Fastener	MS27983-1 NIIN 00-891-9073
3 1/2 inches	Webbing, Type VIII	MIL-W-4008

1. Remove both sets of sockets, caps, and pull tabs from pouch closure flap. Save pull tabs.

2. Position MIL-W-4008 Type VIII webbing on outside surface of pouch flap. Cut and sear webbing ends to match contour of flap end. Boxstitch webbing to flap using size E nylon thread (V-T-295). See figure 16-12.

3. Reposition both sets of sockets, caps, and pull tabs 3/8 inch closer to flap end. Use original pull tabs.

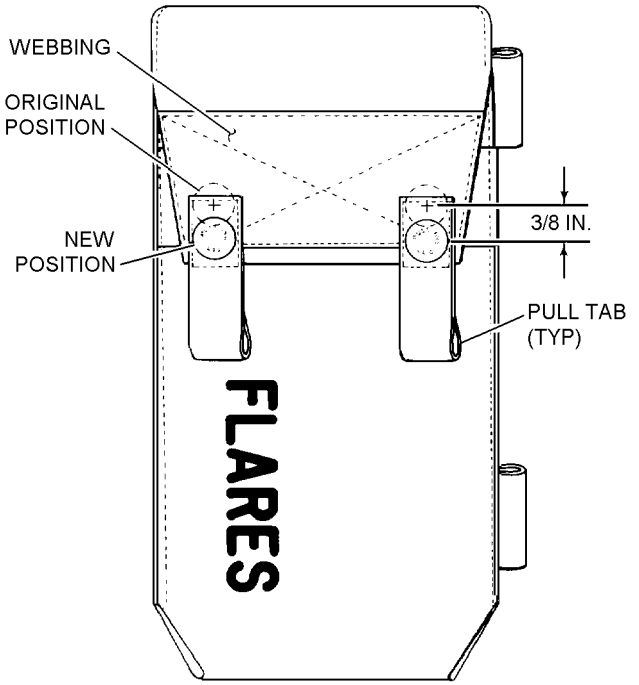

10160012

Figure 16-12. Flare Pouch Repair

16-72. DISASSEMBLY OF THE LIFE PRESERVER. To disassemble the life preserver for bladder or case repairs, proceed as follows:

Support Equipment Required

Quantity	Description	Reference Number
1	Nipper, End Cutting	—

NOTE

Life preserver shall be disassembled only to the extent necessary to perform required maintenance or inspection.

1. Remove six rivets securing each waist lobe to casing with a pair of nippers.

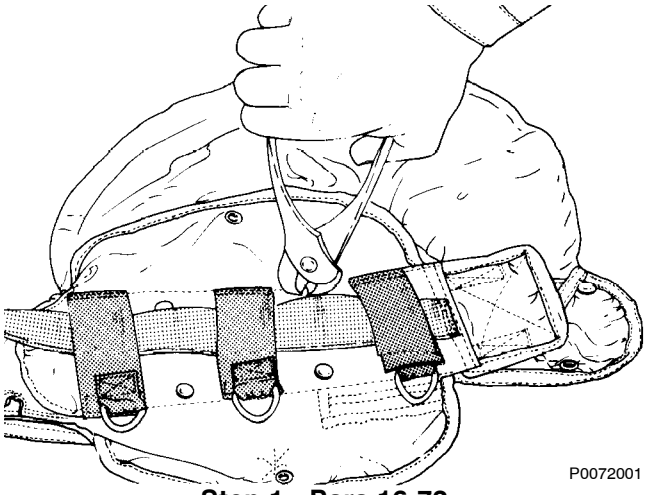

Step 1 - Para 16-72

2. Open casing and remove both inflation assemblies.

3. Reattach cap nuts to valve stems.

4. Release all hook and pile tape fasteners.

5. Fold collar lobe and waist lobes to width of casing.

6. Hold casing at collar and pull flotation assembly down and out of casing, one lobe at a time.

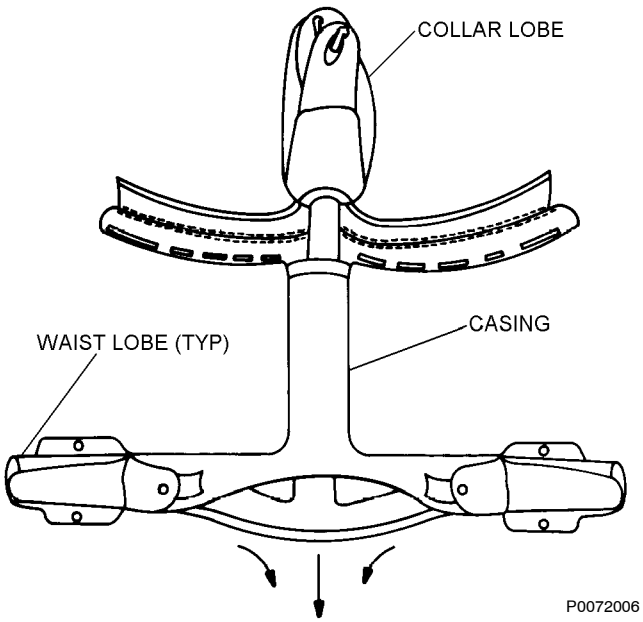

Step 6 - Para 16-72

16-73. REASSEMBLY OF THE LIFE PRESERVER. To reassemble the life preserver proceed as follows:

Support Equipment Required

Quantity	Description	Reference Number
1	Press	M114 (CAGE 83058)

Materials Required

Quantity	Description	Reference Number
12	Post, Rivet	MS27986-3B NIIN 00-281-4359
12	Cap, Rivet	MS27986-4B NIIN 00-281-2553
2	Valve Stem Kit (Note 1)	105AS100-6 (CAGE 30003) NIIN 00-113-8290
3 feet	Cord, Nylon, Type III	MIL-C-5040 NIIN 00-240-2146

Notes: 1. Valve Stem Kit, P/N 105AS100-6, NIIN 00-113-8290, contains one top and one bottom gasket.

NOTE

The quantity of materials listed is sufficient for reassembly of one life preserver.

1. Attach one end of a 3-foot length of Type III nylon cord to snaphook on collar lobe.

CAUTION

Ensure flotation assembly is not twisted in casing channels.

2. Insert free end of nylon cord through back channel of casing and pull collar lobe into casing. Remove nylon cord from collar snaphook. Insert waist lobes through casing waist channels.

3. When flotation assembly is in casing assembly, ensure that it is in proper configuration and is not twisted inside casing.

4. Align rivet holes in flotation assembly attachment patches (on waist lobes) over rivet holes in casing. Insert rivets through holes and seat.

NOTE

The rivet cap shall be on the inside of the casing.

5. Remove old inflation stem gaskets and replace with new gaskets. Reinstall inflation assemblies and protective covers. Pack life preserver in accordance with paragraph 16-84.

16-74. REPLACEMENT OF BEADED INFLATION HANDLE ASSEMBLY. To replace the beaded inflation handle, proceed as follows:

Materials Required

Quantity	Description	Reference Number
As Required	Handle, Beaded, Inflation	975AS121-11 NIIN 01-120-4752 (CAGE 30003)
As Required	Thread, Nylon, Size E	V-T-295 NIIN 00-204-3884

1. Open snap fastener on locking pin cover; then cut and remove safety tie securing eye of locking pin to retaining loop. Carefully remove locking pin from pin keeper and retaining loop.

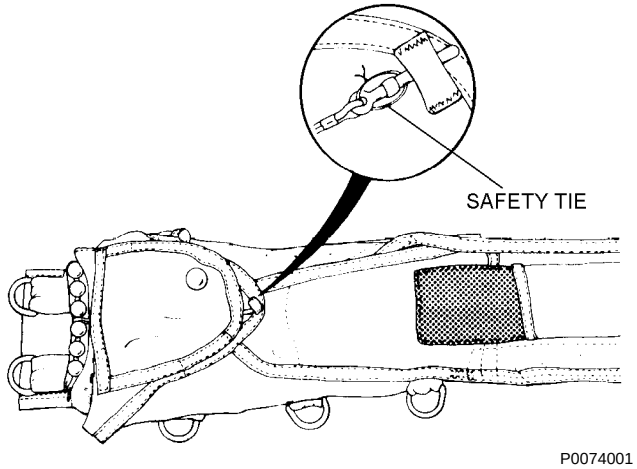

Step 1 - Para 16-74

2. Open flaps and unfold life preserver assembly.

3. Remove CO_2 cylinder from CO_2 inflator assembly. Retain CO_2 cylinder for reinstallation.

4. Remove inflation lanyard from inflator assembly; then unsnap beaded inflation handle from life preserver casing.

5. Secure new beaded handle inflation lanyard to actuating lever by passing lanyard through grommet in bottom casing flap and through hole in end of actuating lever. Pass lanyard back through grommet in bottom casing flap and form lark's head knot.

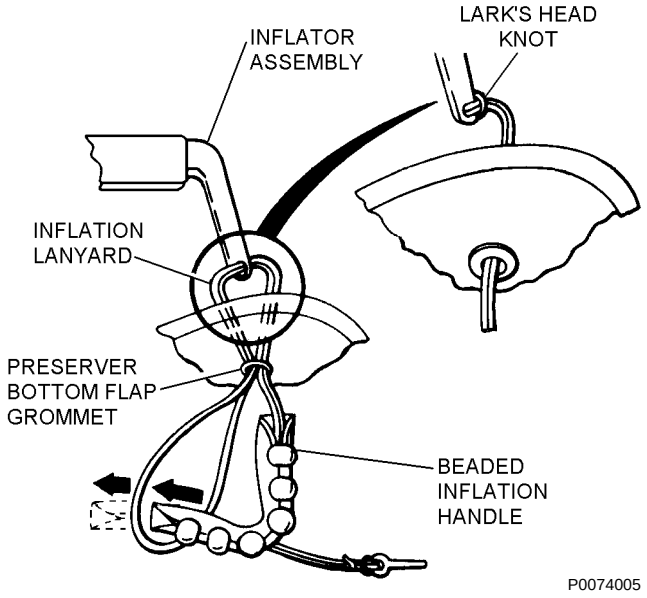

Step 5 - Para 16-74

6. Fasten beaded inflation handle to casing with snap fasteners provided; then safety-tie beaded inflation handle with one turn of size E nylon thread, single. Draw thread sufficiently to permit 1/2-inch ± 1/8-inch space between the middle beads and webbing on the preserver. Tie ends of both safety ties with a surgeon's knot followed by a square knot.

NOTE

Ensure that overhand knot on locking pin lanyard is within 3/4 inch from eye of pin.

7. Route locking pin under outboard flap cover panel and through No. 3 spur grommet.

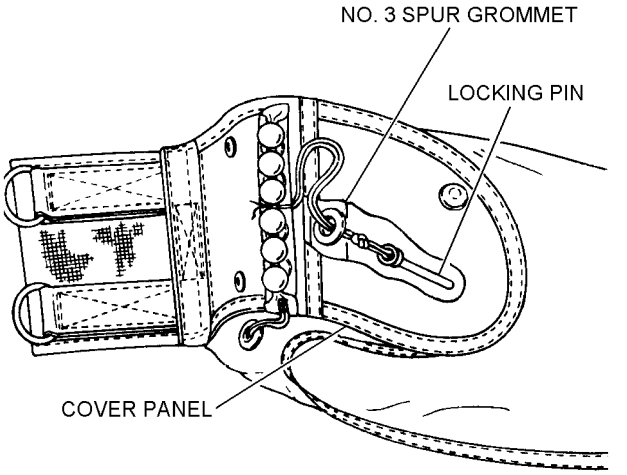

NOTE: LEFT LOBE SHOWN P0074007

Step 7 - Para 16-74

NOTE

On some late issue LPU-23 series life preservers, the No. 3 spur grommet has been deleted.

8. Route the locking pin under the locking pin cover flap through the opening in the stitching at the base of the flap, through the retaining loop/packaging cord loop, and under the pin keeper loop.

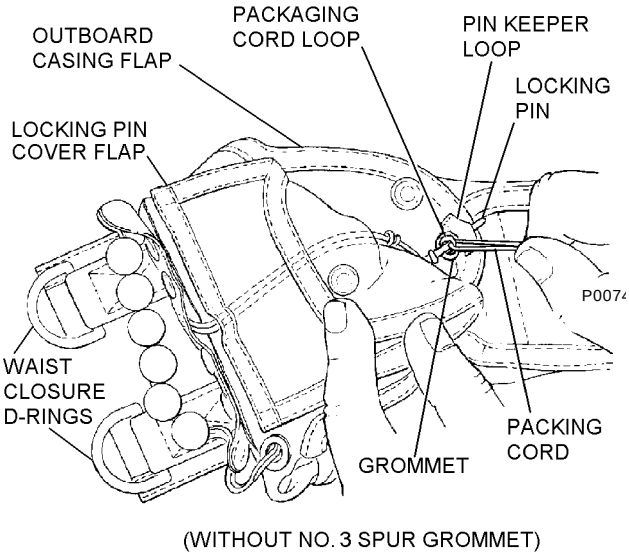

(WITHOUT NO. 3 SPUR GROMMET)

NOTE: LEFT LOBE SHOWN P0074008

Step 8 - Para 16-74

9. Perform beaded inflation handle pull test. Refer to paragraph 16-44.

10. Recock CO_2 inflator and install CO_2 cylinder.

NOTE

Ensure that all hook and pile tapes are securely mated.

11. Pack life preserver in accordance with the applicable paragraph.

12. Make necessary entries on appropriate form in accordance with OPNAVINST 4790.2 Series.

NOTE

FLU-8A/P Automatic Inflators shall be replaced with FLU-8B/P Automatic Inflators if found in service during scheduled maintenance.

16-75. REPLACEMENT OF FLU-8B/P AUTOMATIC INFLATOR ASSEMBLY. To replace damaged, overage, or spent FLU-8B/P automatic inflators proceed as follows:

Support Equipment Required

Quantity	Description	Reference Number
1	3/4-inch Deep Socket	—
1	Wrench, Torque	—

Materials Required

Quantity	Description	Reference Number
1	Cylinder, CO_2 Type III, 35 Grams	MIL-C-25369
As Required	Thread, Nylon, Size A, Type I or II	V-T-295

Materials Required (Cont)

Quantity	Description	Reference Number
1	FLU-8B/P Automatic Inflation Device consisting of:	FW-98 849AS153 (CAGE 30003) NIIN 01-364-4089
1	Inflator Subassembly	1612-009 (CAGE 03688)
1	Sensor Plug Cap Assembly	P/N 1813-044-02 (CAGE 03688)
1	Valve Stem Kit (Note 1)	105AS100-6 (CAGE 30003) NIIN 00-113-8290
1	Seat Seal, O-Ring, Multi	NIIN 01-046-3300
1	Packaging Cord	1138-003-01 (CAGE 03688) NIIN 01-066-3357
1	Sleeve, Battery Insulating (Note 2)	1122-095

Notes: 1. Valve Stem Kit, P/N 105AS100-6, NIIN 00-113-8290, contains one top and one bottom gasket

2. The battery insulating sleeve is not a stocked item. After installation directed by Aircrew Systems Bulletin 976, it becomes part of the FLU-8B/P Unit. Replacement sleeves are issued by Indian Head Division, NSWC.

WARNING

The FLU-8B/P automatic inflator is a cartridge-activated device and will fire if immersed in fresh or salt water. This device is to be installed only on life preservers used by aircrewmembers in ejection seat type aircraft.

1. Remove CO_2 cylinder from inflator.

2. Remove inflation lanyard from inflation actuating lever; then remove damaged, overage, or spent FLU-8B/P automatic inflation assembly.

NOTE

The following component parts may be reused and retained as spares: sensor plug cap, CO_2 cylinder, packaging cord loop, and cap nut.

3. Handle damaged or spent FLU-8B/P inflators in accordance with Federal Regulation 49, CFR 173.55.

4. Examine inflation actuating lever, beaded handle, inflation lanyard, nylon locking pin, sensor plug cap, and packaging cord loop for fraying, corrosion, stripped threads, and other damage.

5. Remove beaded handle inflation lanyard from actuating lever by removing lark's head knot. Retain beaded inflation handle for reinstallation.

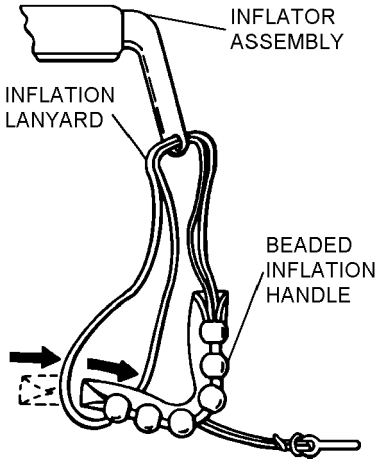

P0075005

Step 5 - Para 16-75

6. Operate manual actuating lever several times to ensure that lever moves freely. Check to ensure that piercing pin moves freely inside valve body and goes through center of packaging cord loop.

7. Ensure that packaging cord loop is not pinched between piercing pin and actuating lever. If there is free play in actuating lever when it is in its cocked position, packaging cord loop is pinched. If necessary, reinstall in accordance with paragraph 16-76.

8. Install protective cover onto life preserver assembly.

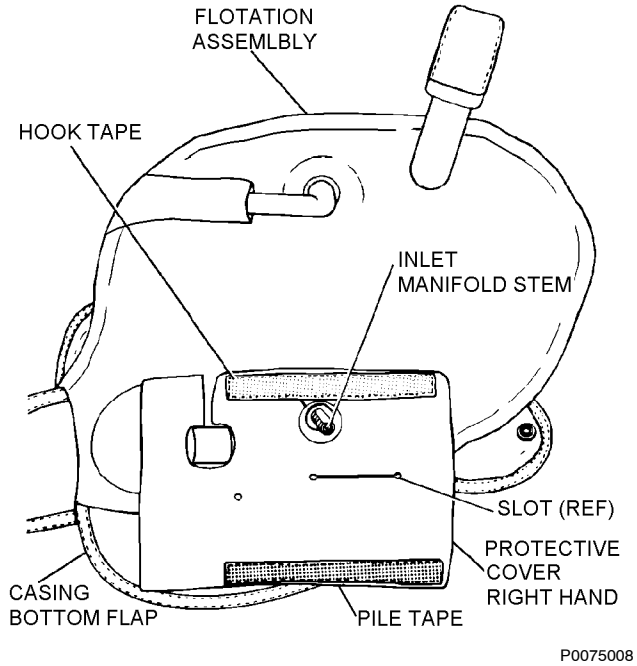

Step 8 - Para 16-75

9. Install beaded handle inflation lanyard to actuating lever by passing inflation lanyard through bottom flap grommet of life preserver assembly and protective cover. Then attach inflation lanyard to actuating lever by a lark's head knot.

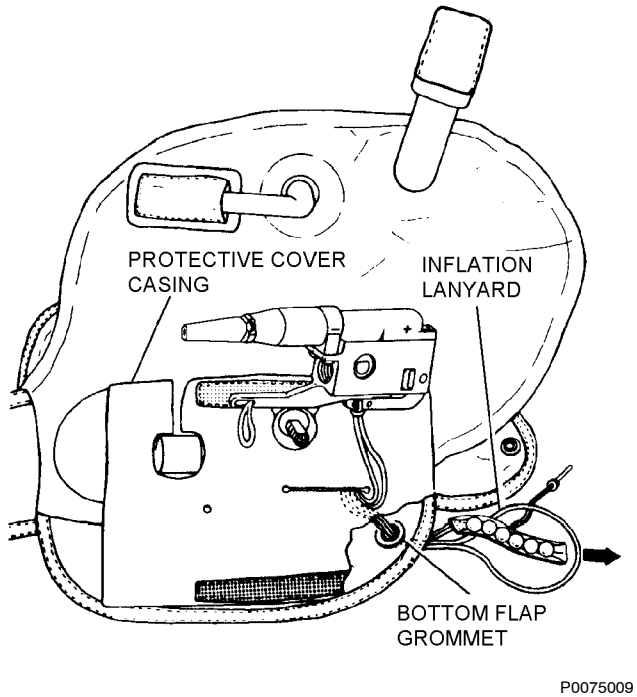

Step 9 - Para 16-75

10. Fasten beaded inflation handle to casing with snap fasteners provided.

11. Perform beaded inflation handle pull test in accordance with paragraph 16-44.

12. Replace beaded inflation handle to casing with snap fasteners; then safety-tie with size E nylon thread. Ensure that thread is drawn sufficiently to permit a 1/2-inch ±1/8-inch space between the middle beads and webbing on preserver.

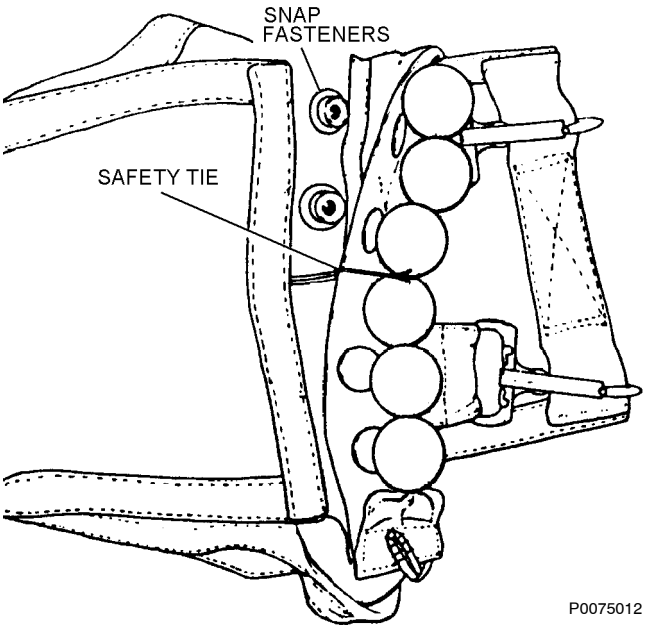

Step 12 - Para 16-75

13. Ensure that packaging cord is not pinched between piercing pin and actuating lever. If there is free play in the actuating lever when it is in its cocked position, packaging cord loop is pinched. If necessary, reinstall in accordance with paragraph 16-76.

14. Make necessary entries on appropriate form in accordance with OPNAVINST 4790.2 Series, including:

a. Date of installation of each FLU-8B/P.

b. Date of manufacture of each FLU-8B/P. See figure 16-3.

c. Lot number of each FLU-8B/P. See figure 16-3.

d. Serial number of each FLU-8B/P.

e. Date of installation of batteries.

f. Date of manufacture of batteries. Refer to paragraph 16-39.

NOTE

For data on total life of the FLU-8B/P automatic inflation assembly, refer to NAVAIR 11-100-1.1. If total life expiration date occurs before date of next scheduled calendar inspection, replace inflator assembly. The manganese dioxide batteries used in the assembly have a total life of 3 years from the date of manufacture.

15. Install bottom gasket over manifold stem and position at manifold base. The bottom gasket has a smaller internal diameter than the top gasket.

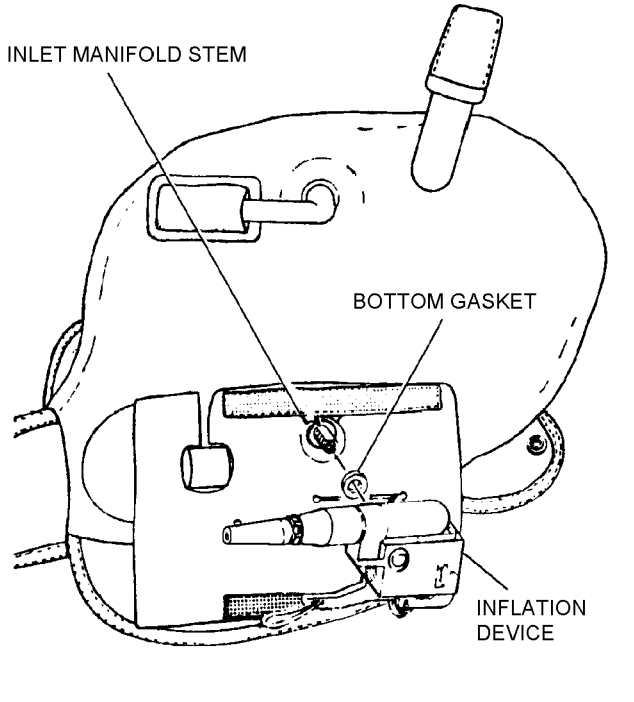

Step 15 - Para 16-75

16. Install inflator body on manifold stem.

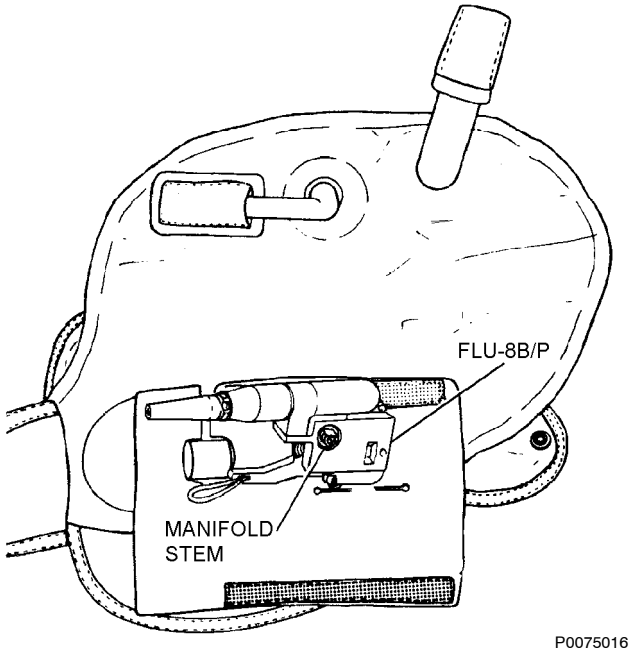

Step 16 - Para 16-75

17. Install top gasket on manifold stem. Position on top of the inflator body.

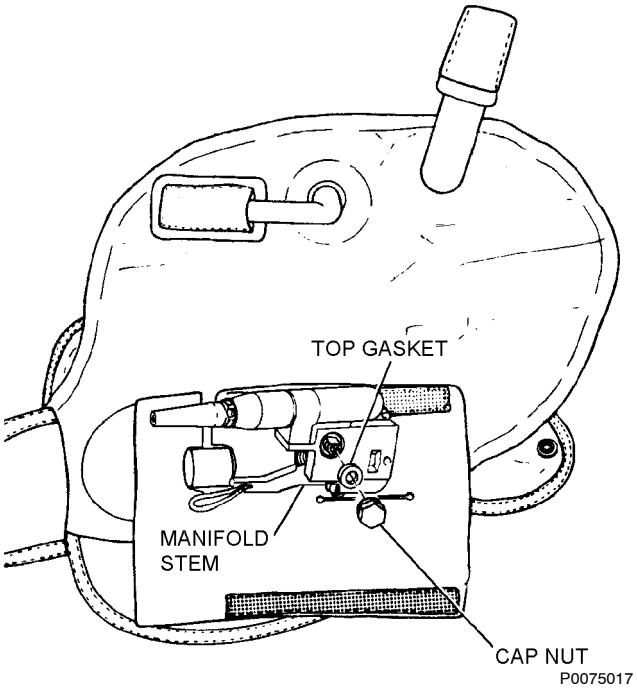

Step 17 - Para 16-75

CAUTION

Valve stem may rotate if cap nut is over torqued.

18. Install cap nut on manifold stem, securing inflator to a torque value of 8 ±1 in-lb.

19. Replace batteries in accordance with paragraph 16-54.

CAUTION

The functional test will be performed in the manual mode only. The automatic inflator (FLU-8B/P) may be operated an unlimited amount of times in the manual mode without affecting its automatic capability. Automatic actuation requires replacement of the inflation assembly.

20. Install CO_2 cylinder in accordance with paragraph 16-53. Perform functional test in accordance with paragraph 16-33.

21. Deflate life preserver in accordance with paragraph 16-34, and remove spent CO_2 cylinder and O-ring.

NOTE

During intermediate inspection, inspect condition of O-ring and replace if necessary. After each functional inspection the O-ring seal shall be replaced.

22. Perform a leakage test in accordance with paragraph 16-45.

23. Install a 35-gram, Type III CO_2 cylinder in accordance with paragraph 16-53.

WARNING

The packaging cord loop must be routed under the manual actuating lever, under the valve guide arm, then up through the valve guide arm hole. (See figure 16-13.)

24. Ensure that packaging cord loop is routed as in figure 16-13.

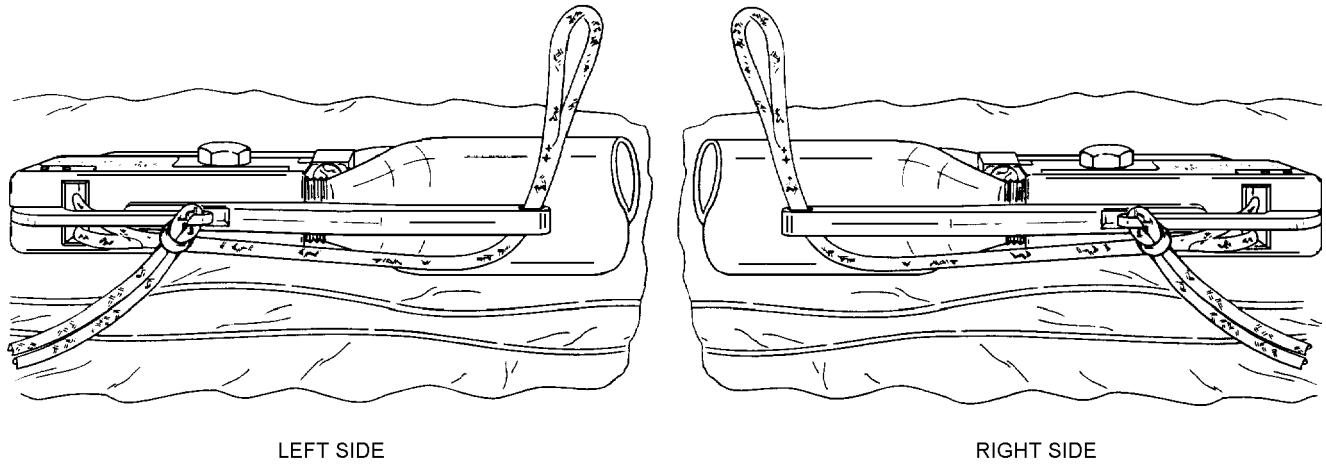

Figure 16-13. Packaging Cord Loop Routing

16-76. REPLACEMENT OF PACKAGING CORD ON THE FLU-8B/P AUTOMATIC INFLATOR. To replace packaging cord loop on the FLU-8B/P automatic inflator proceed as follows:

Materials Required

Quantity	Description	Reference Number
1	Screw, Retaining, Piercing Pin	1842-006-01 (CAGE 03688)
1	O-ring (Seat Seal)	MS28775-012 NIIN 00-005-0426
1	Packaging Cord	1138-003-01 (CAGE 03688) NIIN 01-066-3357

1. Remove CO_2 cylinder and O-ring from inflator.

2. Carefully remove inflator from life preserver.

3. Remove damaged cord.

4. Start the piercing pin retaining screw into the appropriate hole.

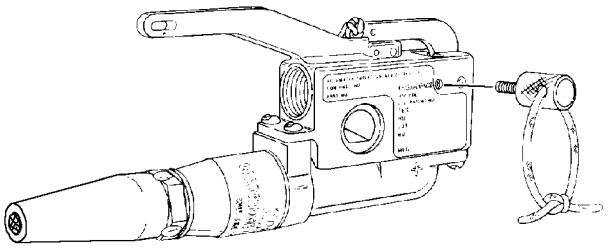

P0076004

Step 4 - Para 16-76

5. Turn the screw until it just touches the piercing pin then back off one turn.

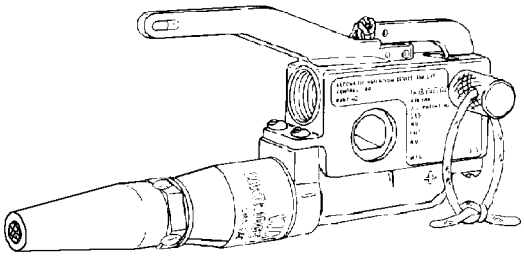

P0076005

Step 5 - Para 16-76

6. Operate the actuating lever to its mid-actuated position.

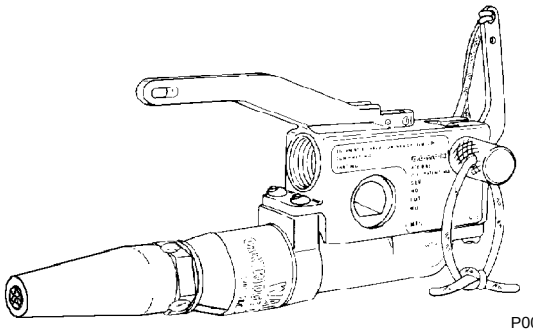

P0076006

Step 6 - Para 16-76

7. While holding the actuator lever in the mid actuated position, tighten the retaining screw to hold the piercing pin in its full penetrating position.

8. Operate the actuating lever to its full actuated position.

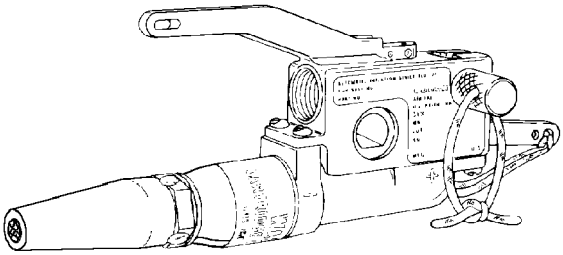

P0076008

Step 8 - Para 16-76

9. Insert the new packaging cord loop in the open lot on the inflator body.

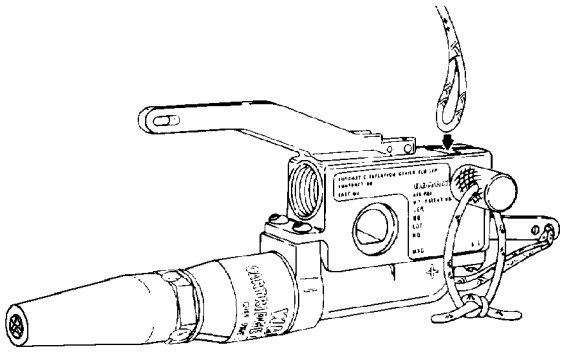

P0076009

Step 9 - Para 16-76

NOTE

There is an open slot on the opposite side of the body from the retaining screw hole. This slot may help in positioning the loop such that the piercing pin, when released, will pass through the loop.

10. Operate the actuating lever to mid-actuating position. Remove the retaining pin, allowing the piercing pin to retract securing the loop.

11. Return actuating lever to normal position and ensure that actuating lever is properly cocked. If there is free play in actuating lever when it is in its cocked position, packaging cord loop is pinched. If necessary repeat steps 4 through 11 until actuating lever is properly cocked.

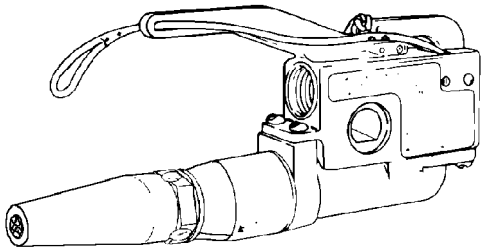

P0076011

Step 11 - Para 16-76

CAUTION

The packaging cord loop is always routed under the guide arm and then up through the guide arm hole. See figure 16-13.

12. Replace inflator onto life preserver. Refer to paragraph 16-75, steps 13 through 16.

13. Install new O-ring and charged CO_2 cylinder. Refer to paragraph 16-53; see figure 16-8.

14. Perform function test (refer to paragraph 16-33) and leakage test (refer to paragraph 16-45) and return to service.

16-77. REPLACEMENT OF SENSOR PLUG CAP ASSEMBLY ON FLU-8B/P AUTOMATIC INFLATOR. To replace damaged or defective sensor plug cap, proceed as follows:

Support Equipment Required

Quantity	Description	Reference Number
1	Sensor Plug Cap Assembly	P/N 1813-044-02 (CAGE 03688)

WARNING

No foreign object should be inserted into sensor plug ports for any reason.

1. Remove damaged or defective sensor plug cap using a standard 3/4-inch wrench. See figure 16-14.

2. Ensure sensor plug spring is symmetrical in form and securely mounted.

3. Install new sensor plug cap. Plug shall be held in square alignment with housing while engaging threads. Ensure batteries are installed in accordance with paragraph 16-54.

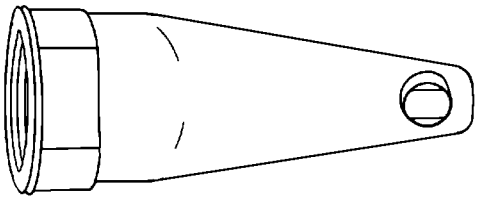

10160014

Figure 16-14. FLU-8B/P Sensor Plug Cap

4. Torque FLU-8B/P sensor plug cap to 15 in-lb using 3/4-inch socket and torque wrench.

5. Test batteries in accordance with paragraph 16-40.

16-78. REPLACEMENT OF TOP AND BOTTOM GASKETS. To replace the top and bottom gaskets on the FLU-8B/P inflators, proceed as follows:

Materials Required

Quantity	Description	Reference Number
1	Valve Stem Kit (Note 1)	105AS100-6 (CAGE 30003) NIIN 00-113-8290

Notes: 1. Valve Stem Kit, P/N 105AS100-6, NIIN 00-113-8290, contains one top and one bottom gasket.

1. Remove cap nut and top gasket from inflator.
2. Remove inflator and replace bottom gasket.
3. Carefully place inflator onto valve stem.
4. Install top gasket onto valve stem.

CAUTION

Valve stem may rotate if cap nut is over torqued.

5. Tighten cap nut onto valve stem and torque to a value of 8 ±1 in-lb.

6. Perform functional and leakage tests on life preserver cell that was repaired. Refer to paragraphs 16-33 and 16-45.

16-79. REPLACEMENT OF CHECK VALVE ASSEMBLY. To replace a defective check valve assembly, proceed as follows:

Support Equipment Required

Quantity	Description	Reference Number
1	Tool, Valve Core	8769A or equivalent (CAGE 27783) NIIN 01-354-5423
1	Wrench, Torque	—

Materials Required

Quantity	Description	Reference Number
1	Valve, Pneumatic Inflator (Check Valve Assembly) (Note 1)	Schrader-Bridgeport P/N 8457500047

Notes: 1. Schrader-Bridgeport P/N 8457500047 must be open purchased from:
Schrader-Bridgeport Intl
205 Frazier Rd
P.O. Box 668
Altivista, VA 24517
Phone (804) 369-8875

1. If not available, fabricate a valve core tool as shown in Chapter 3.

2. Remove inflator cap nut.

3. Insert valve core tool and unscrew check valve from valve stem.

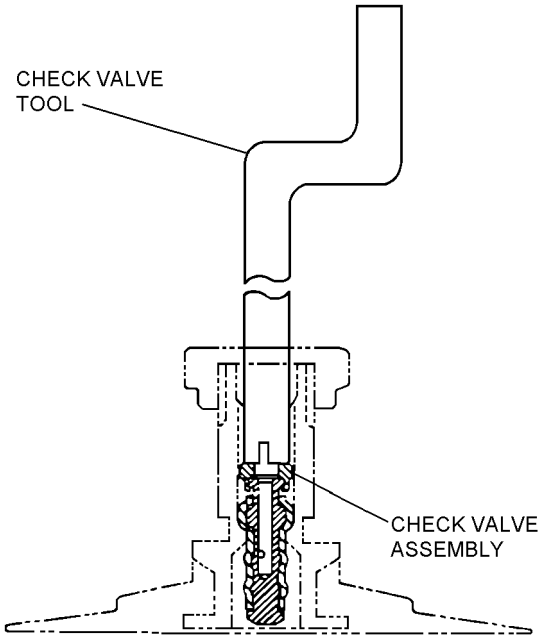

P0079003

Step 3 - Para 16-79

4. Insert new check valve in valve stem and tighten with valve core tool hand tight.

CAUTION

Valve stem may rotate if cap nut is over torqued.

5. Replace cap nut and torque to a value of 8 ±1 in-lb.

6. Perform a functional and leakage test on life preserver cell that was repaired. Refer to paragraphs 16-33 and 16-45.

16-80. FABRICATION OF PROTECTIVE COVER ASSEMBLY. To fabricate a protective cover, proceed as follows:

Materials Required

Quantity	Description	Reference Number
17 x 6 inches	Cloth, Nylon, Polychloroprene-coated	MIL-C-19002 NIIN 00-935-1759
12 x 5/8 inches	Fastener Tape, Hook, Type II	MIL-F-21840
12 x 5/8 inches	Fastener Tape, Pile, Type II	MIL-F-21840
As Required	Thread, Nylon, Type I or II, Size E, Sage Green	V-T-295 NIIN 00-204-3884

NOTE

Procedural step 1 is for a right protective cover and step 2 is for a left protective cover.

1. To fabricate a right protective cover, proceed as follows:

a. Cut an 8 1/2-inch length of coated nylon cloth.

b. Cut a 6-inch length of hook and pile tape and sew to the coated side of the coated nylon cloth. Use stitch type 301 stitching 8 to 10 stitches per inch.

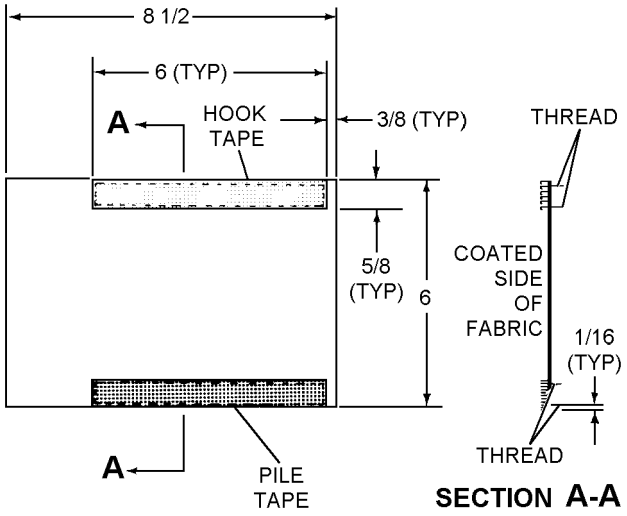

P008001B

Step 1b - Para 16-80

c. Position coated nylon cloth, coated side up, over cutting board and punch a 1 7/16-inch diameter hole, a 1-inch diameter hole and three 3/8-inch diameter holes.

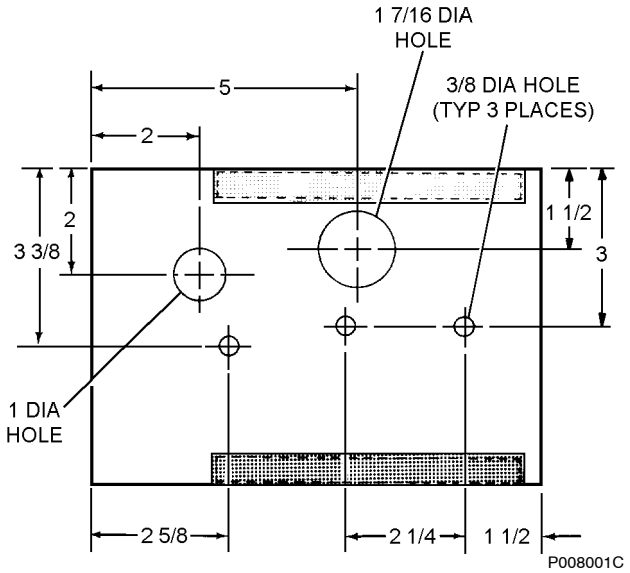

Step 1c - Para 16-80

d. Cut slit between two 3/8-inch diameter holes.

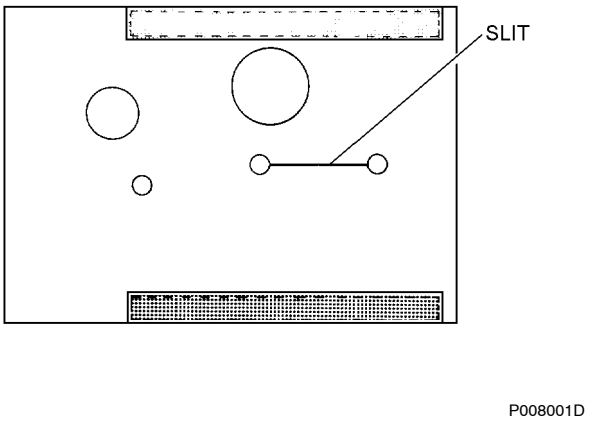

Step 1d - Para 16-80

2. To fabricate a left protective cover, proceed as follows:

a. Cut an 8 1/2-inch length of coated nylon cloth.

b. Cut a 6-inch length of hook and pile tape and sew to the coated side of the coated nylon cloth.

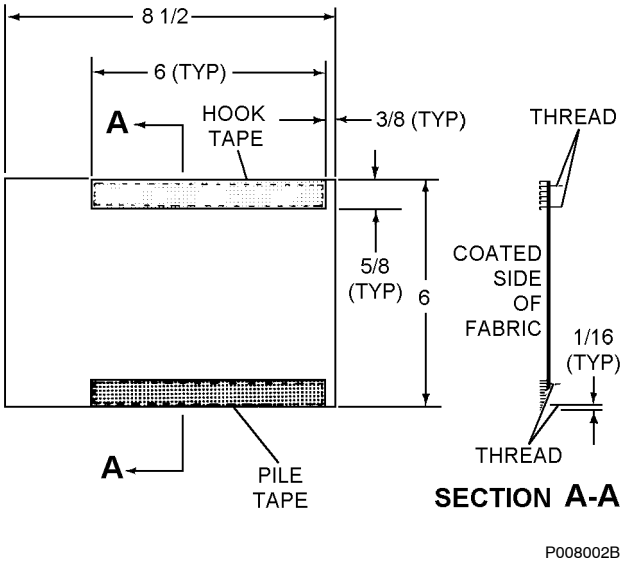

Step 2b - Para 16-80

c. Position coated nylon cloth, coated side up, over cutting board and punch a 1 7/16-inch diameter hole, a 1-inch diameter hole and three 3/8-inch diameter holes.

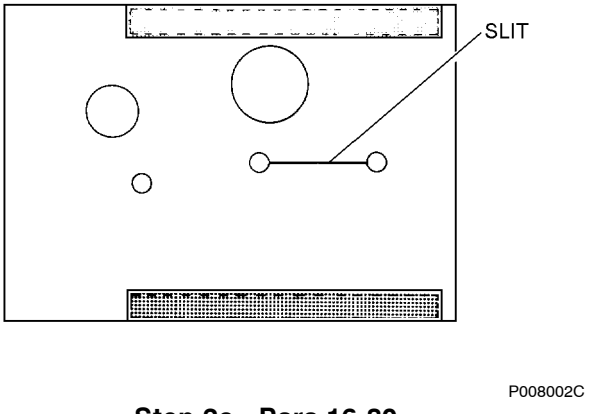

Step 2c - Para 16-80

d. Cut slit between two 3/8-inch diameter holes.

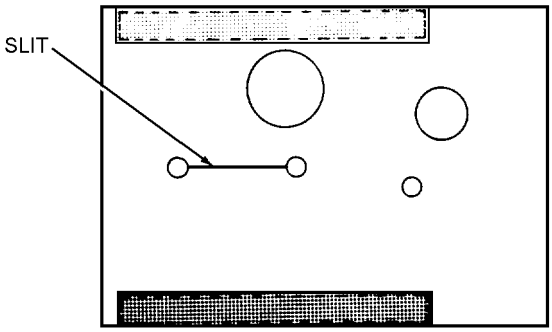

P008002D

Step 2d - Para 16-80

16-81. FABRICATION OF COLLAR LOBE WEBBING LOOPS. To fabricate collar lobe webbing loops, proceed as follows:

Materials Required

Quantity	Description	Reference Number
18-inch Length	Webbing, Nylon, Type IV, 1-inch Width	MIL-T-5038, NIIN 00-261-8579 (CAGE 81349)
2	Post, Snap Fastener	MS27981-5B, NIIN 00-250-6858 (CAGE 96906)
2	Stud, Snap Fastener	MS27981-4B, NIIN 00-901-9660 (CAGE 96906)
2	Socket, Snap Fastener	M527981-3B, NIIN 00-276-4966 (CAGE 96906)
2	Cap, Snap Fastener	M527981-1B, NIIN 00-276-4954 (CAGE 96906)
As Required	Thread, Nylon Type II, Size E	V-T-295 NIIN 00-204-3884

NOTE

All stitching shall be 10 to 12 stitches per inch, size E nylon thread.

1. Cut two 9-inch lengths of 1-inch wide nylon webbing and sear ends.

2. Sew one piece of webbing to outer side of each collar lobe casing in accordance with dimensions shown in figure 16-15.

3. Position and install snap fasteners in accordance with dimensions shown in figure 16-15, and ensure proper mate.

16-82. FABRICATION AND INSTALLATION OF LOCKING PIN COVER (PRESERVERS WITHOUT NO. 3 SPUR GROMMET). For life preservers without No. 3 spur grommet, fabricate and install the locking pin cover as follows:

Materials Required

Quantity	Description	Reference Number
1	Socket, Snap Fastener	MS27981-3B NIIN 00-276-4966
1	Cap, Snap Fastener	MS27981-1B NIIN 00-276-4954
As Required	Cloth, Nylon, Polychloroprene-coated, Type I, Sage Green	MIL-C-19002 NIIN 00-935-1759
As Required	Thread, Stitching, Nylon, Type I or II, Size E	V-T-295 NIIN 00-240-3884
As Required	Tape, Binding, Nylon, 3/4-inch Wide, Sage Green 1551 Type III	MIL-T-5038 NIIN 00-176-8083

1. Cut basic locking pin cover from polychloroprene coated nylon cloth in dimensions shown in figure 16-16. Define form of locking pin cover using appropriate end of casing waist lobe assembly as pattern.

2. Reinforce fabric with single row stitching around entire perimeter of locking pin cover.

3. Apply 3/4 inch binding tape to perimeter of cover as shown in figure 16-16.

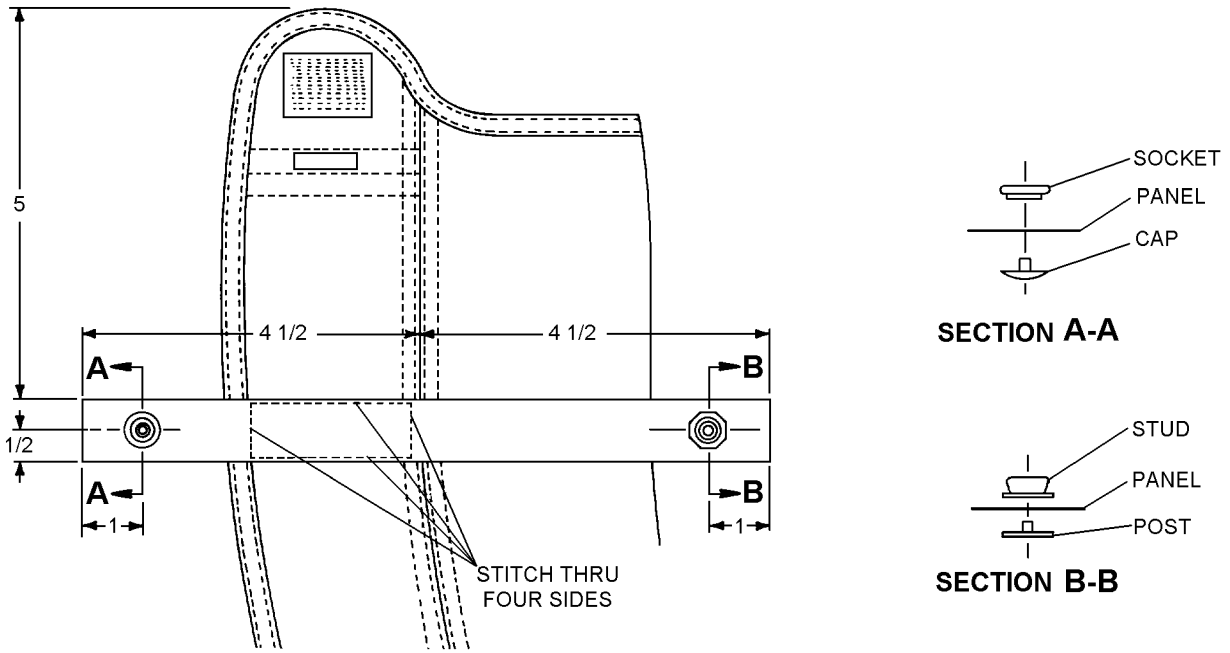

10160015

Figure 16-15. Addition of Webbing Loops

NOTE

Binding tape may be in one continuous strip or two sections.

4. Align locking pin cover with mating surface of casing assembly and install in accordance with figure 16-17.

5. Mark snap fastener alignment and install locking pin cover, snap fastener socket and button.

NOTE

When properly aligned with casing assembly, the straight edge of locking pin cover will be butted 1/8 inch from edge of beaded inflation handle snap fastener stud installation (casing main panel subassembly).

16-83. Deleted.

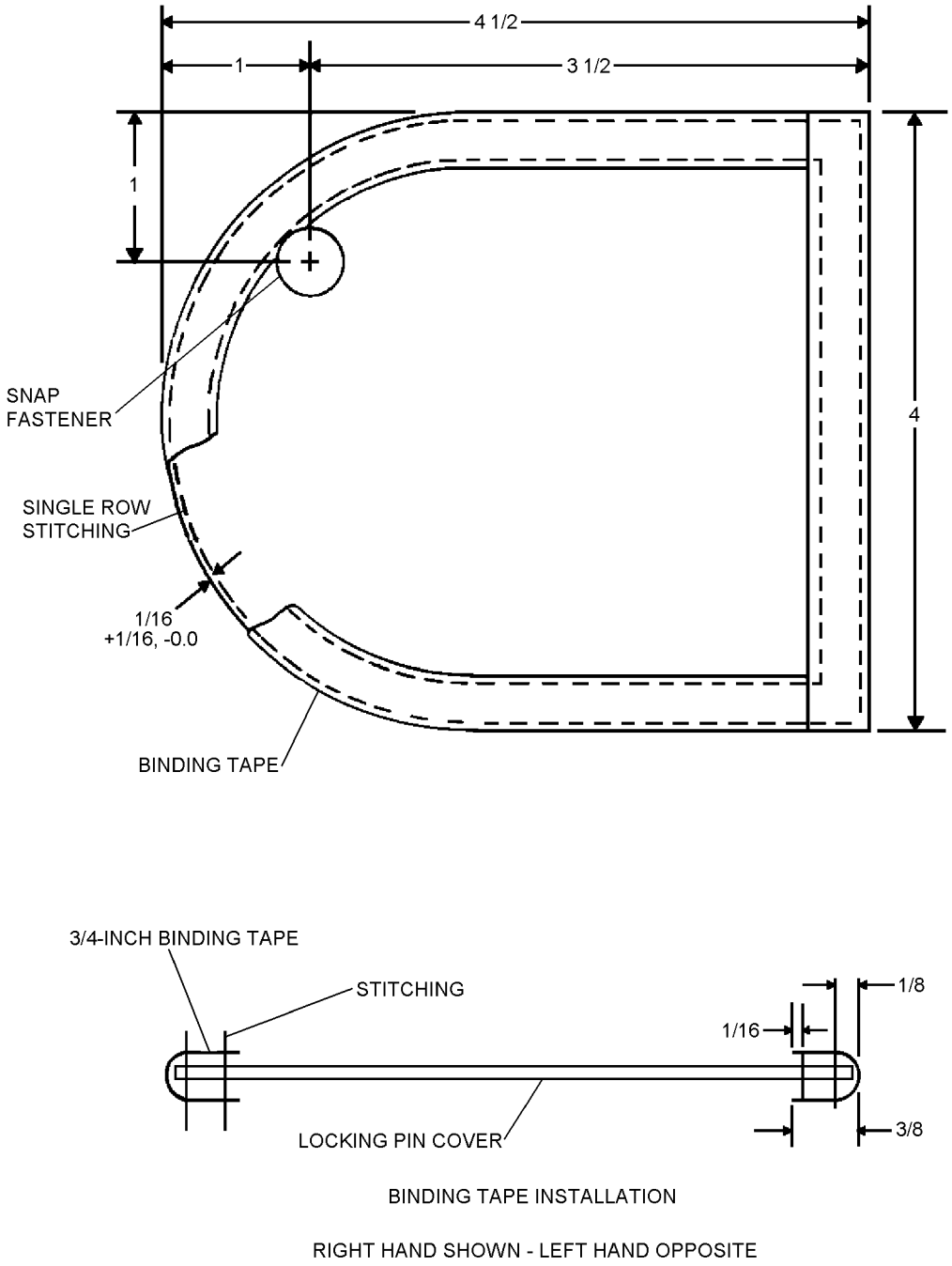

10160016

Figure 16-16. Fabrication of Locking Pin Cover

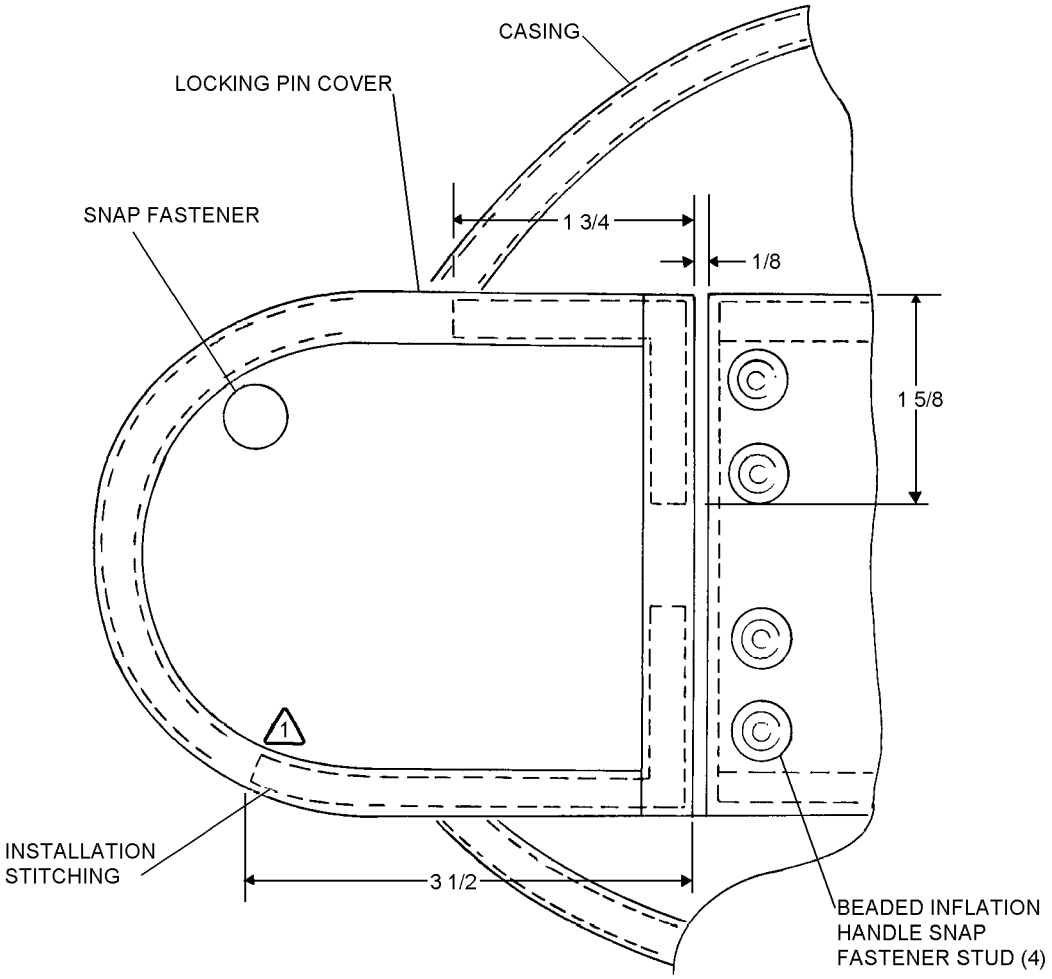

RIGHT HAND SHOWN - LEFT HAND OPPOSITE

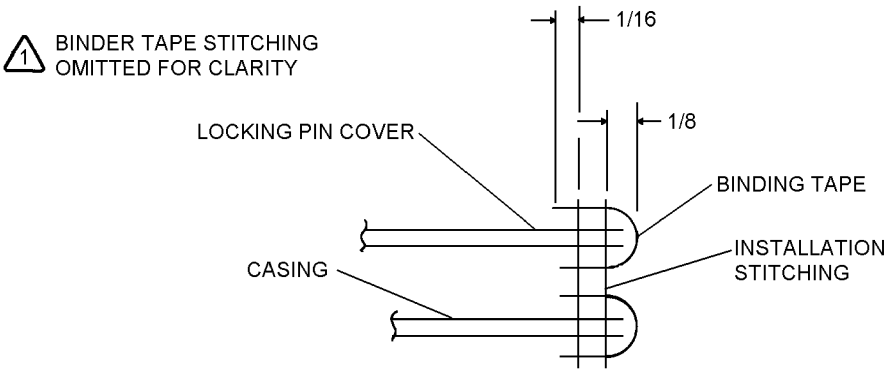

10160017

Figure 16-17. Locking Pin Cover Installation

Figure 16-18 Deleted.

16-84. PACKING PROCEDURES FOR LPU-23/P SERIES LIFE PRESERVER ASSEMBLY.

16-85. The LPU-23/P series shall be packed by qualified personnel at the intermediate maintenance level. For cleaning and servicing procedures, refer to paragraph 16-51.

16-86. To pack the LPU-23/P series life preserver assembly, proceed as follows:

Materials Required

Quantity	Description	Reference Number
As Required	Talc, Technical	MIL-T-50036A NIIN 01-080-9589
As Required	Cord, Nylon Type I	MIL-C-5040 NIIN 00-240-2154
As Required	Thread, Nylon Size A	V-T-295 NIIN 00-240-3803
As Required	Thread, Nylon Size E	V-T-295 NIIN 00-240-3884

1. Ensure that life preserver has been inspected in accordance with paragraph 16-22 of this manual.

2. Prior to packing, ensure that chambers are thoroughly deflated. Ensure all bladder surfaces front and rear are lightly dusted with talc.

3. Oral inflation valve shall be locked by knurled ring and placed in oral inflation valve pocket. Position life preserver assembly with collar panel folded down.

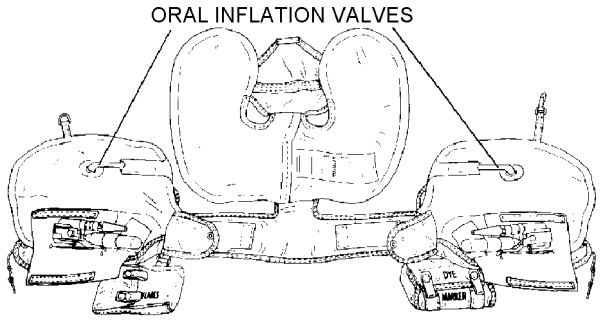

P0086003

Step 3 - Para 16-86

4. Insert collar snaphooks through slots in collar casing and fold collar edge over slots in casing.

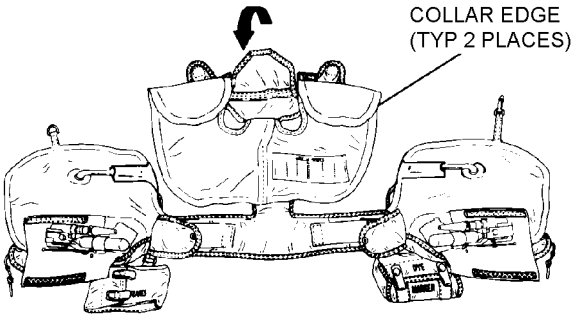

P0086004

Step 4 - Para 16-86

5. Fold over edge of collar panels.

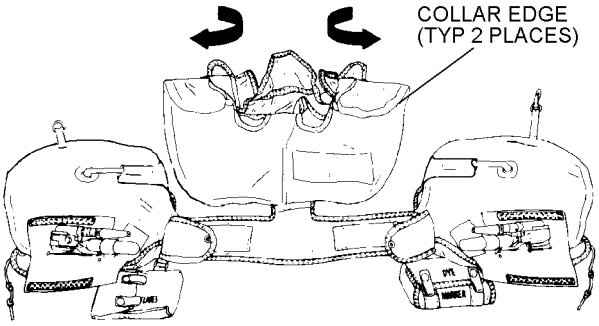

P0086005

Step 5 - Para 16-86

6. Accordion-fold sides of collar lobes into the collar casing.

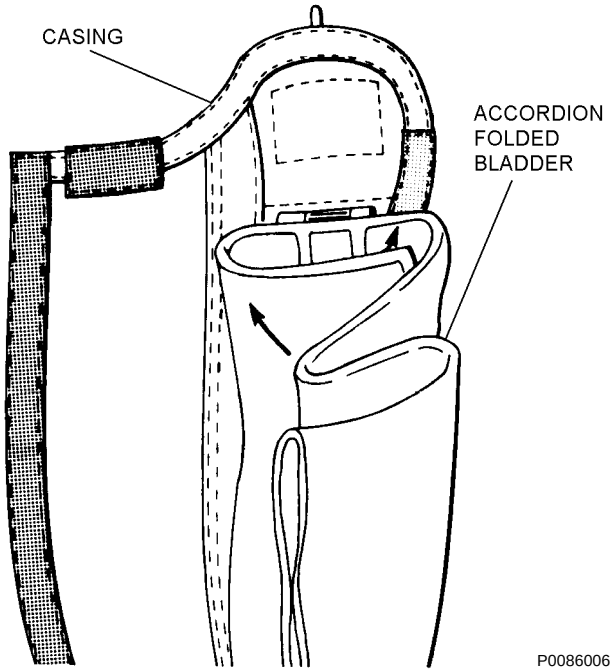

Step 6 - Para 16-86

7. Tuck in casing lip and secure collar casing with hook and pile tape.

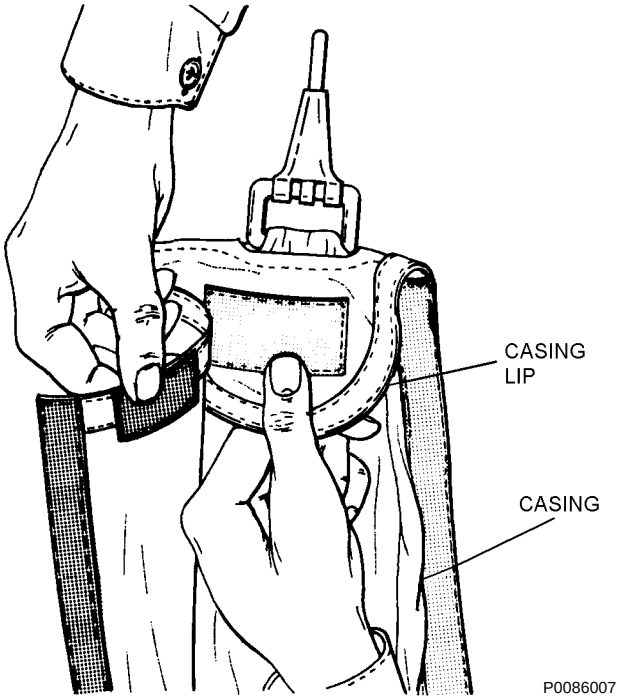

Step 7 - Para 16-86

NOTE

The unsewn 3/8- to 1/2-inch end tab of hook tape located on the front edge of the collar lobe casing shall be attached to the mating pile tape on the collar casing cover.

8. Close collar lobe section by engaging the 3/8 to 1/2-inch unsewn portion of hook tape to pile tape on casing cover.

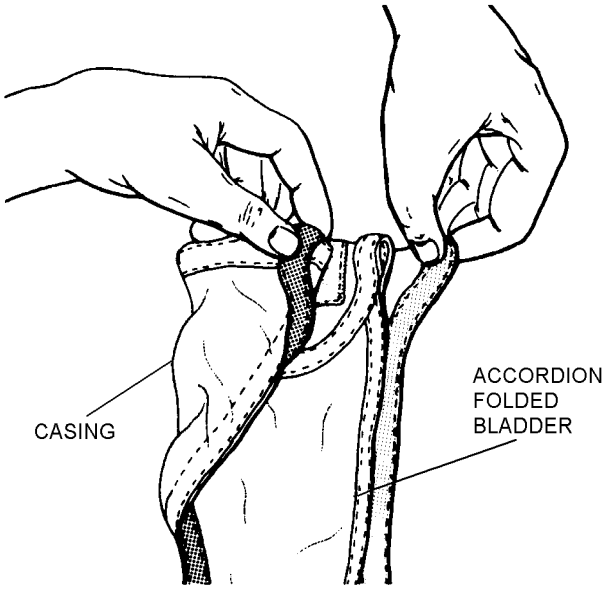

Step 8 - Para 16-86

9. Secure hook and pile tape approximately 8 inches along casing cover edge, securing the accordion-folded bladder within casing cover.

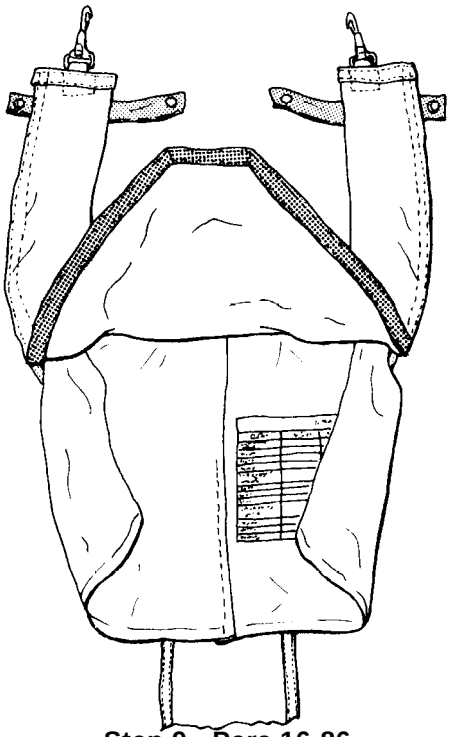

P0086009

Step 9 - Para 16-86

10. Accordion-fold bottom of collar lobe into collar casing.

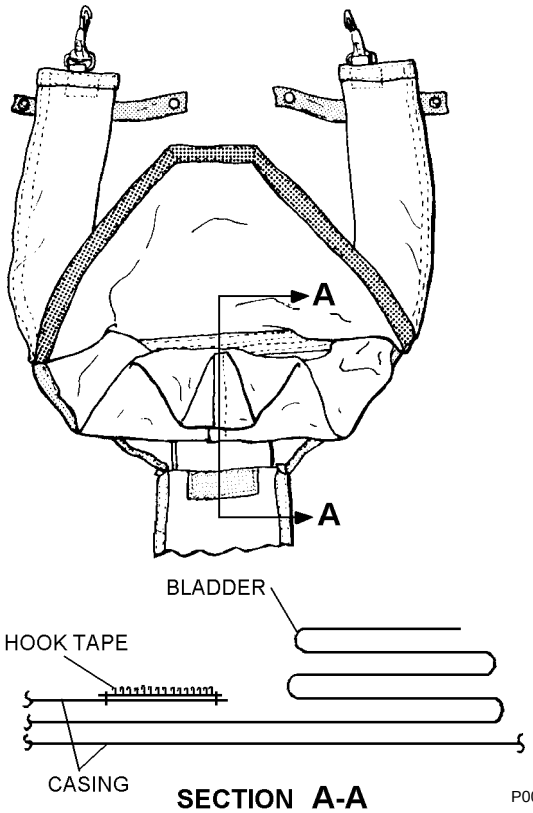

P0086010

Step 10 - Para 16-86

NOTE

The unsewn 3/8- to 1/2-inch end tab of hook tape located on the rear edges of the collar lobe casing shall be attached to the mating pile tape on the collar casing cover.

11. Continue securing hook and pile tape along casing cover edge and casing lip, ending on unsewn end tabs of hook tape, completely enclosing collar lobe bladder within casing cover. Ensure all hook tape is engaged with pile tape and not exposed.

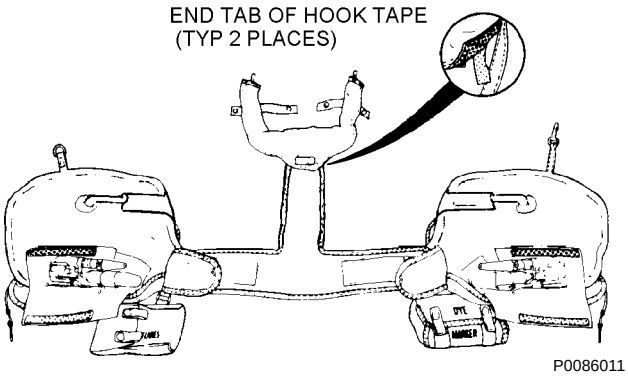

P0086011

Step 11 - Para 16-86

WARNING

The packaging cord closure loops on both inflation assemblies must be routed under the manual actuating lever, under the valve guide arm, then up through the valve guide arm hole. See figure 16-13.

Ensure that rubber bands are not used to retain slip-on pockets to D-ring and snaphook fittings.

12. Insert snaphook and D-ring on waist lobes into slip-on pockets.

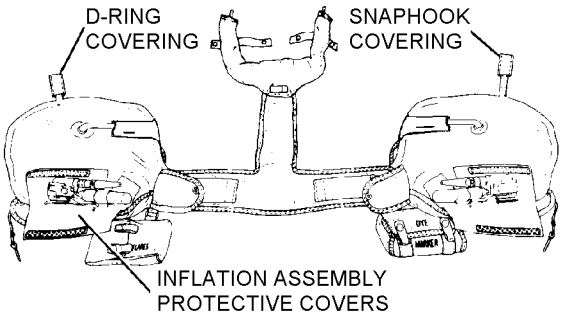

P0086012

Step 12 - Para 16-86

13. Ensure that beaded handle with inflation lanyard is through 2 1/4-inch slot in protective cover, then route packaging cord loop through 3/8-inch diameter hole in protective cover. Secure protective cover using hook and pile tape.

NOTE

Packing cord shall be used to aid in closing life preserver casing.

14. Insert a 2-foot piece of Type I nylon cord through packaging cord loop. Insert ends of packing cord through grommet in bottom casing flap. Make first fold in waist lobe by bringing top of lobe over to top edge of protective cover.

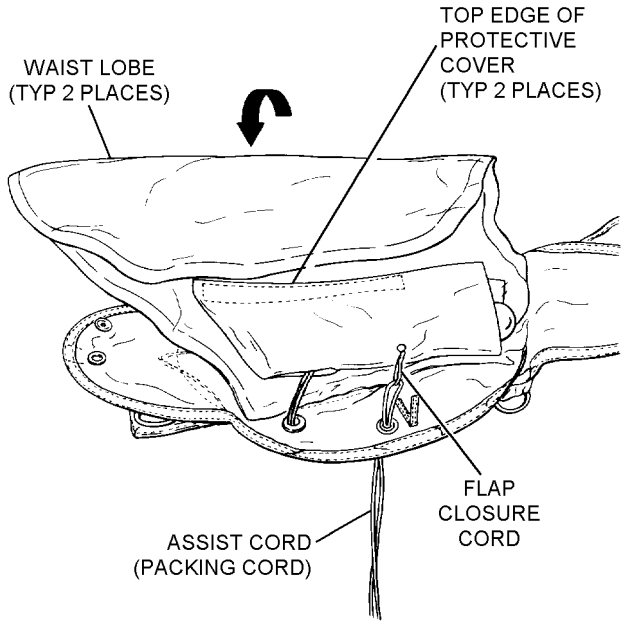

P0086014

Step 14 - Para 16-86

15. Fold outboard of waist lobe in, clearing outer casing flap.

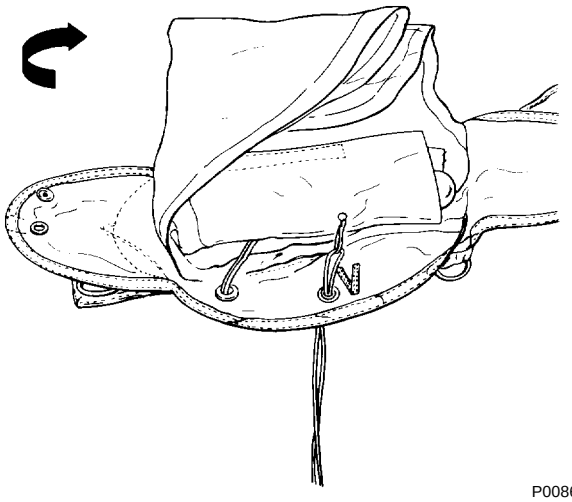

P0086015

Step 15 - Para 16-86

16. Fold waist lobe over to bottom edge of protective cover.

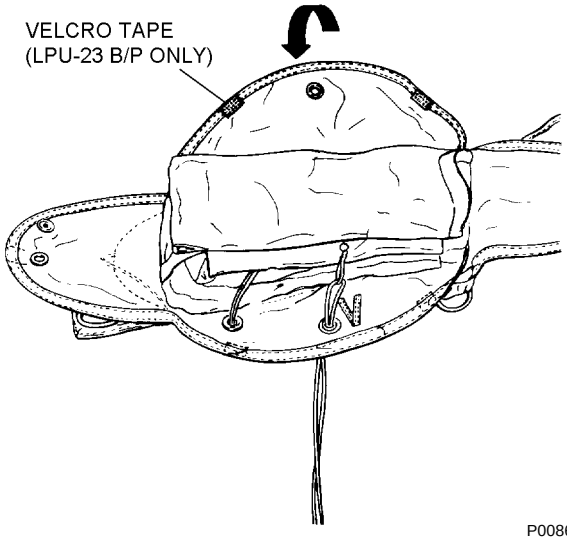

P0086018

Step 16 - Para 16-86

17. Pass ends of assist cord through grommet in upper casing flap, and bring bottom flap over folded waist lobe.

18. Fold upper casing flap over bottom casing flap, and pull free end of packaging cord loop through grommet. Ensure velcro hook and pile strips mate (LPU-23B/P only).

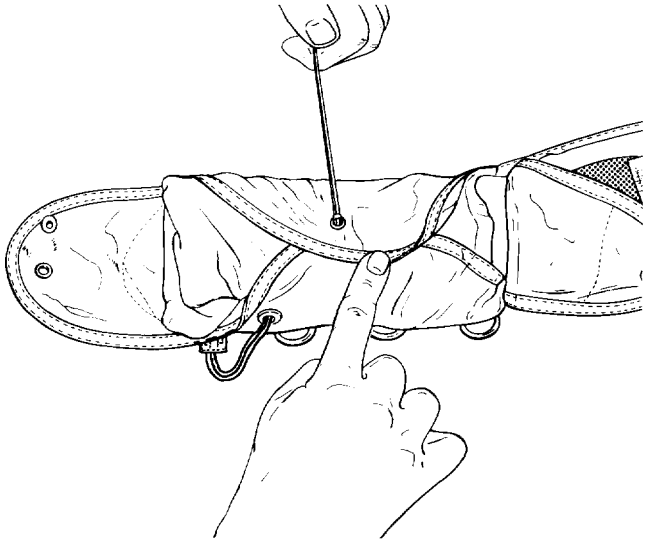

P0086018

Step 18 - Para 16-86

19. Thread packing cord through inboard flap grommet. Pull packaging loop through grommet.

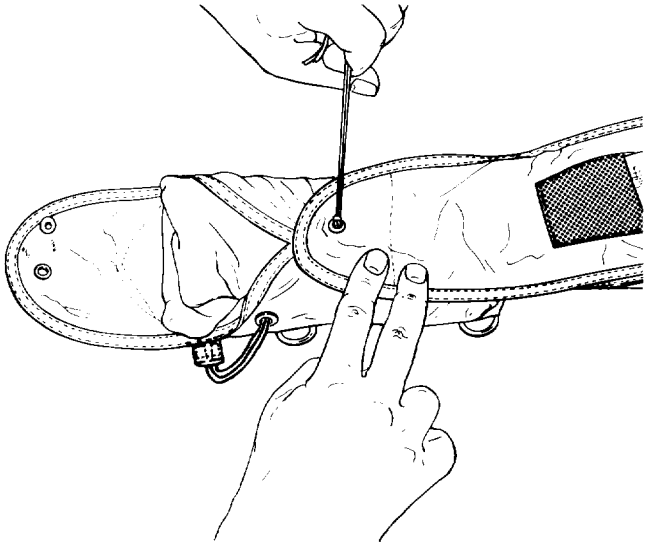

P0086019

Step 19 - Para 16-86

20. Route locking pin under locking pin cover flap and through No. 3 spur grommet.

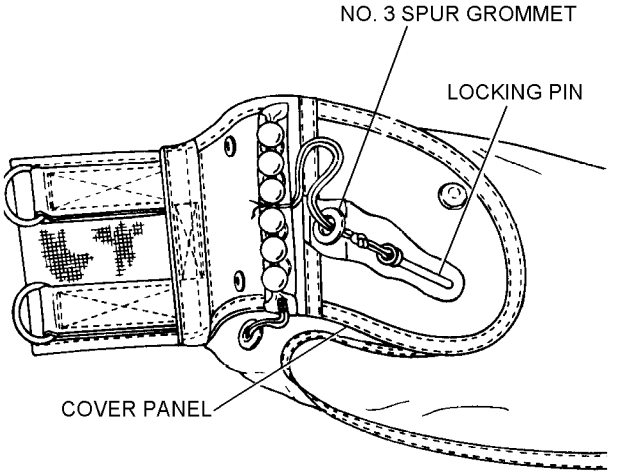

NOTE: LEFT LOBE SHOWN

P0086020

Step 20 - Para 16-86

21. (LPU-23B/P assembly) Route locking pin under locking pin cover flap. Webbing panel and spur grommet have been deleted on newly procured life preserver assemblies.

WARNING

To avoid possible injury when closing casing of right waist lobe, do not place palm of hand on waist closure snaphooks.

22. Fold outboard casing flap over, passing packing cord through grommet. Pull packaging loop through grommet. Insert locking pin through packaging loop and into pin keeper loop. Remove packing cord.

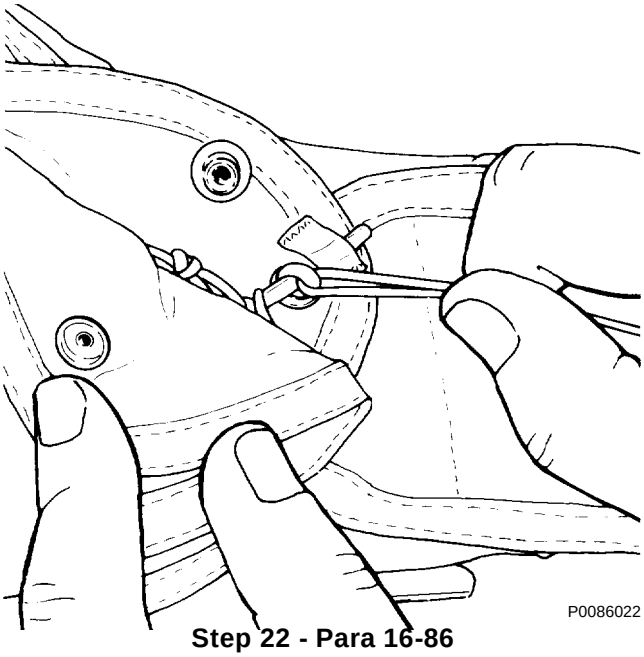

P0086022

Step 22 - Para 16-86

23. Safety-tie eye of locking pin by passing one turn of size A nylon thread through eye of pin, around packaging cord loop, then under pin. Safety-tie beaded inflation handle with one turn of size E nylon thread, single. Draw threads sufficiently to permit 1/2 ±1/8-inch space between the middle beads and webbing on the preserver. Tie ends of both safety ties with a surgeon's knot followed by a square knot.

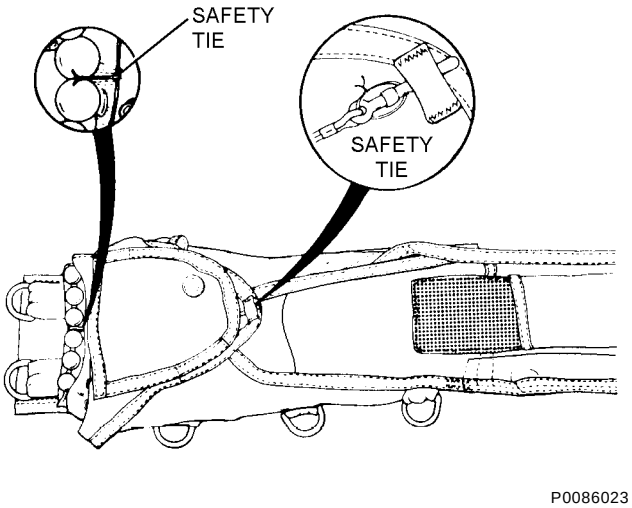

Step 23 - Para 16-86

24. Close pin protector flap.

NOTE

NAVAIR 13-1-6.5, Rescue and Survival Equipment, contains information on inspection and replacement of survival items.

25. When required, ensure survival items have been inspected for expiration and damage.

NOTE

Each survival item shall be secured to the snap fastener tab of its respective pouch with a 36-inch length (DYE MARKER) or 80-inch length (FLARES) of nylon cord (MIL-C-5040, Type I). Sear ends of each cord.

26. When required, insert two dye markers into pouch labeled DYE MARKER. Insert two Marine Smoke and Illumination Signals into pouch labeled FLARES. Fake excess line and secure with rubber bands.

27. Make necessary entries on appropriate form in accordance with OPNAVINST 4790.2 Series.

Section 16-4. Illustrated Parts Breakdown (IPB)

16-87. GENERAL.

16-88. This section lists and illustrates the assemblies and detail parts of the LPU-23A/P and LPU-23B/P components. For information on the LPU-23C/P, see Chapter 18.

16-89. The Illustrated Parts Breakdown should be used during maintenance when requisitioning and identifying parts.

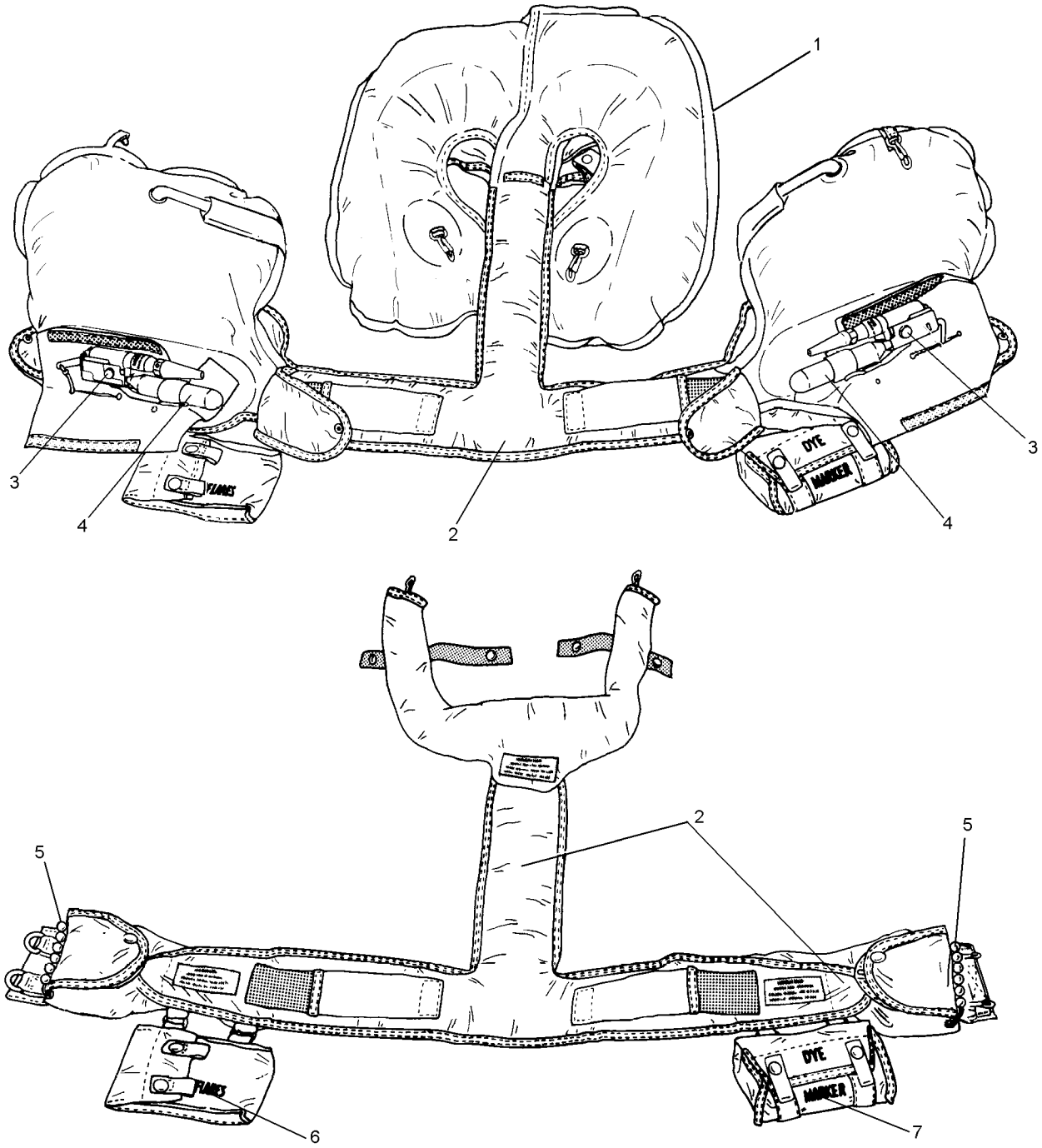

10160019

Figure 16-19. LPU-23/P Series Life Preserver, Illustrated Parts Breakdown

Figure and Index Number	Part Number	Description 1 2 3 4 5 6 7	Units Per Assembly	Usable On Code
16-19	No Number	LPU-23A/P and LPU-23B/P SERIES . . . . . . LIFE PRESERVER	REF	
-1	68A73H1-102 (NIIN 01-138-4329)	. INFLATABLE LIFE PRESERVER . . . . . . LPU-23A/P (Note 3)	1	A
	68A73H1-104 (NIIN 01-138-4329)	. INFLATABLE LIFE PRESERVER . . . . . . LPU-23B/P (Note 3)	1	B
-2	975AS103-302 (NIIN 01-120-4753)	. . CASING ASSEMBLY, LPU-23A/P	1	A
	975AS103-304 (NIIN 01-120-4753)	. . CASING ASSEMBLY, LPU-23B/P	1	B
-3	849AS153 (NIIN 01-364-4089)	. . INFLATION ASSEMBLY, FLU-8B/P	2	
	849AS103	. . . BATTERY, 6-Volt, Manganese Dioxide	4	
	1122-095	. . . SLEEVE, Battery Insulating (Note 4)	1	
	1813-044-02	. . . SENSOR PLUG CAP, FLU-8B/P	2	
	105AS100-3	. . . GASKET, Top (30003) (Note 1)	2	
	105AS100-4	. . . GASKET, Bottom (30003) (Note 1)	2	
	NIIN 01-046-3300	. . . SEAT SEAL, O-Ring, Multi	2	
	1138-003-01 (NIIN 01-584-0265)	. . . PACKAGING CORD LOOP	2	
-4	MIL-C-25369 (NIIN 01-077-8773)	. . . CO_2 CYLINDER, Type III, 35 Gram	2	
-5	975AS121-11 (NIIN 01-120-4752)	. . . BEADED INFLATION HANDLE, ... Type I	2	
-6	68A73D3-61 (NIIN 01-123-2194)	. . FLARE POUCH ASSEMBLY . . . . . . (Note 2)	1	
-7	68A73D2-41 (NIIN 01-124-3806)	. . DYE MARKER POUCH ASSEMBLY . . . . . . (Note 2)	1	

Notes:
1. Valve Stem Kit, P/N 105AS100-6, NIIN 00-113-8290, contains one top and one bottom gasket.
2. Optional equipment at the discretion of the Squadron Commander.
3. No longer available in supply. Must order LPU-23C/P.
4. The battery insulating sleeve is not a stocked item. After installation directed by Aircrew Systems Bulletin 976, it becomes part of the FLU-8B/P Unit. Replacement sleeves are issued by Indian Head Division, NSWC.

NUMERICAL INDEX

Part Number	Figure and Index Number	SM&R Code
MIL-C-25369	16-19-4	PAGZZ
NIIN 01-046-3300	16-19-3	
105AS100-3	16-19-3	
105AS100-4	16-19-3	
1122-095	16-19-3	
1138-003-01	16-19-3	PA--Z
1618-012-01	16-19-3	PA--Z
68A73H1-102	16-19-1	PAOGG
68A73H1-104	16-19-1	PAOGG
68A73D2-41	16-19-7	PAGZZ
68A73D3-61	16-19-6	PAGZZ
849AS103	16-19-3	PA--Z
849AS153	16-19-3	PA--Z
975AS103-302	16-19-2	PAGZZ
975AS103-304	16-19-2	PAGZZ
975AS121-11	16-19-5	PAGZZ

CHAPTER 17

LPU-27/P22P-7(V) LIFE PRESERVER ASSEMBLY

Section 17-1. Description

17-1. GENERAL.

WARNING

The LPU-27/P22P-7(V) life preserver assemblies shall not be used in ejection seat aircraft.

17-2. LPU-27/P22P-7(V) life preserver assembly is not a procured item. It is a LPU-21B/P or LPU-21C/P which has been modified in accordance with Aircrew Systems Change 523 and redesignated LPU-27/P22P-7(V). The modification added an extension panel to increase the length of the casing webbing belt (see paragraph 17-77).

17-3. The LPU-27/P22P-7(V) life preserver (hereafter referred to as LPU-27) is designed for wear by aircrew personnel of patrol aircraft and as authorized for use by aircrew as identified by area type commanders. The added extension panel provides the capability of wearing the life preserver with or without the anti-exposure garment.

17-4. The LPU-27 life preserver is designed as a constant wear item for use with the survival vest and will not interfere with the removal of the nonintegrated parachute harness. Survival item pouches are attached to the life preserver casing. The dye marker and signal flares are not initially supplied and must be individually requisitioned. Refer to table 17-1 and figures 17-1 and 17-2.

17-5. CONFIGURATION.

NOTE

The LPU-27/P22P-7(V) life preserver shall not be configured with FLU-8B/P Automatic Inflation Device. The LPU-27 is equipped with beaded inflation handles to activate the inflation assembly. The beaded inflation handles improve accessibility and provide the inflation system with a multidirectional pull capability. Manual inflation occurs when both beaded inflation handles are pulled in a natural, slightly down and straight out position from the body.

CAUTION

Use only Polychloroprene adhesives and Polychloroprene-coated cloth and patches on Polychloroprene-coated LPU-27/P22P-7(V) life preserver assemblies.

17-6. The LPU-27 life preserver assembly weighs 4 pounds (without survival items) and provides a minimum of 65 pounds of buoyancy. The flotation assembly is constructed of polychloroprene-coated nylon cloth and consists of two independent flotation chambers. One chamber consists of the left waist lobe joined by a tube to the right collar lobe. This chamber is serviced by the carbon dioxide inflation assembly and oral inflation valve attached to the left waist lobe. The other chamber consists of the right waist lobe joined by a tube to the left collar lobe. This chamber is serviced by the carbon dioxide inflation assembly and oral inflation valve attached to the right waist lobe. The two chambers are sewn together at the collar lobes. See figures 17-1 and 17-2.

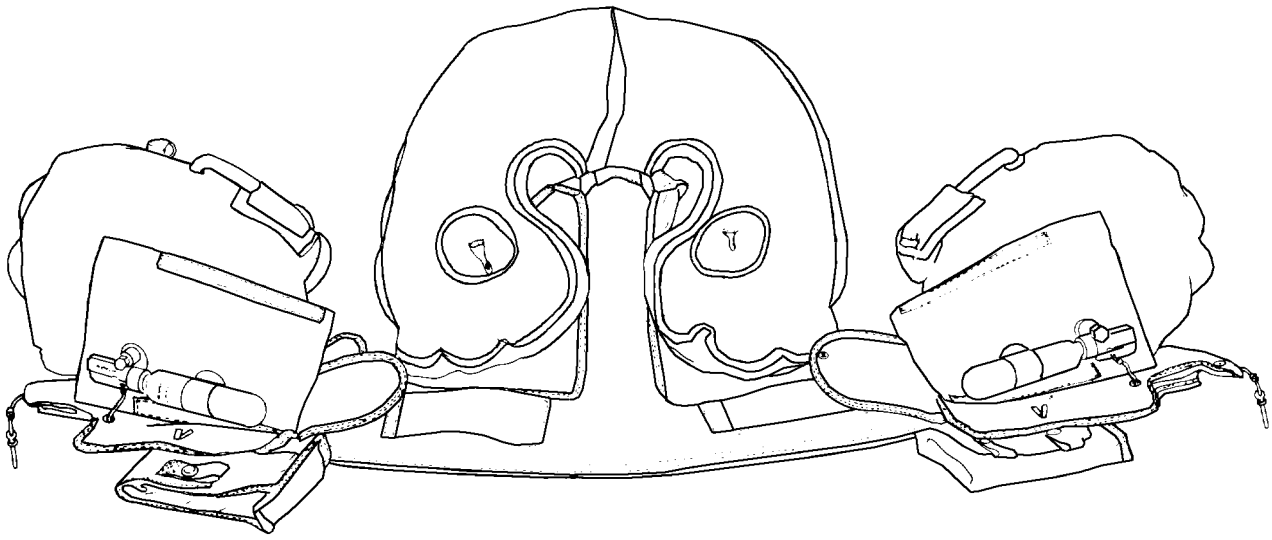

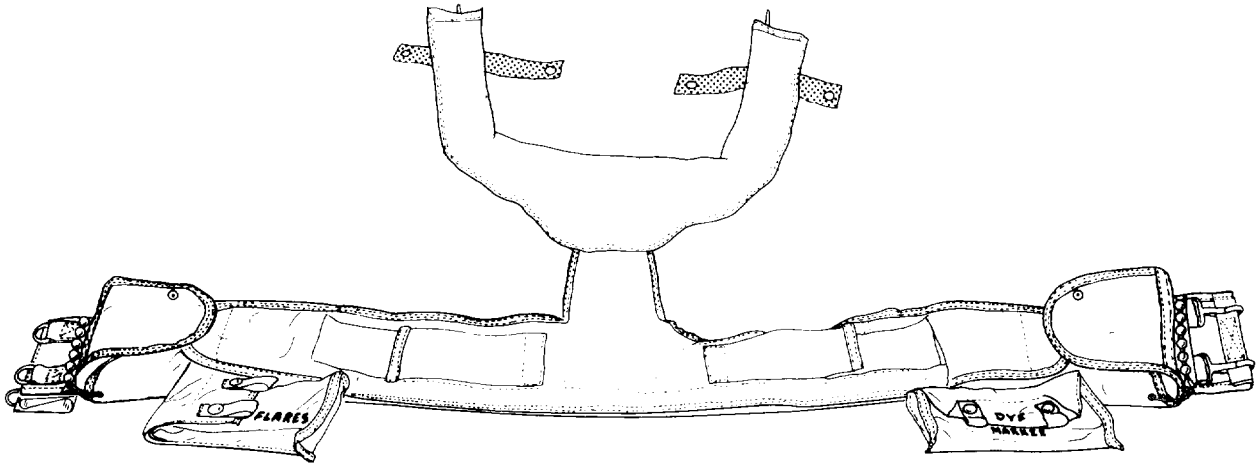

10170001

Figure 17-1. LPU-27/P22P-7(V) Life Preserver Assembly

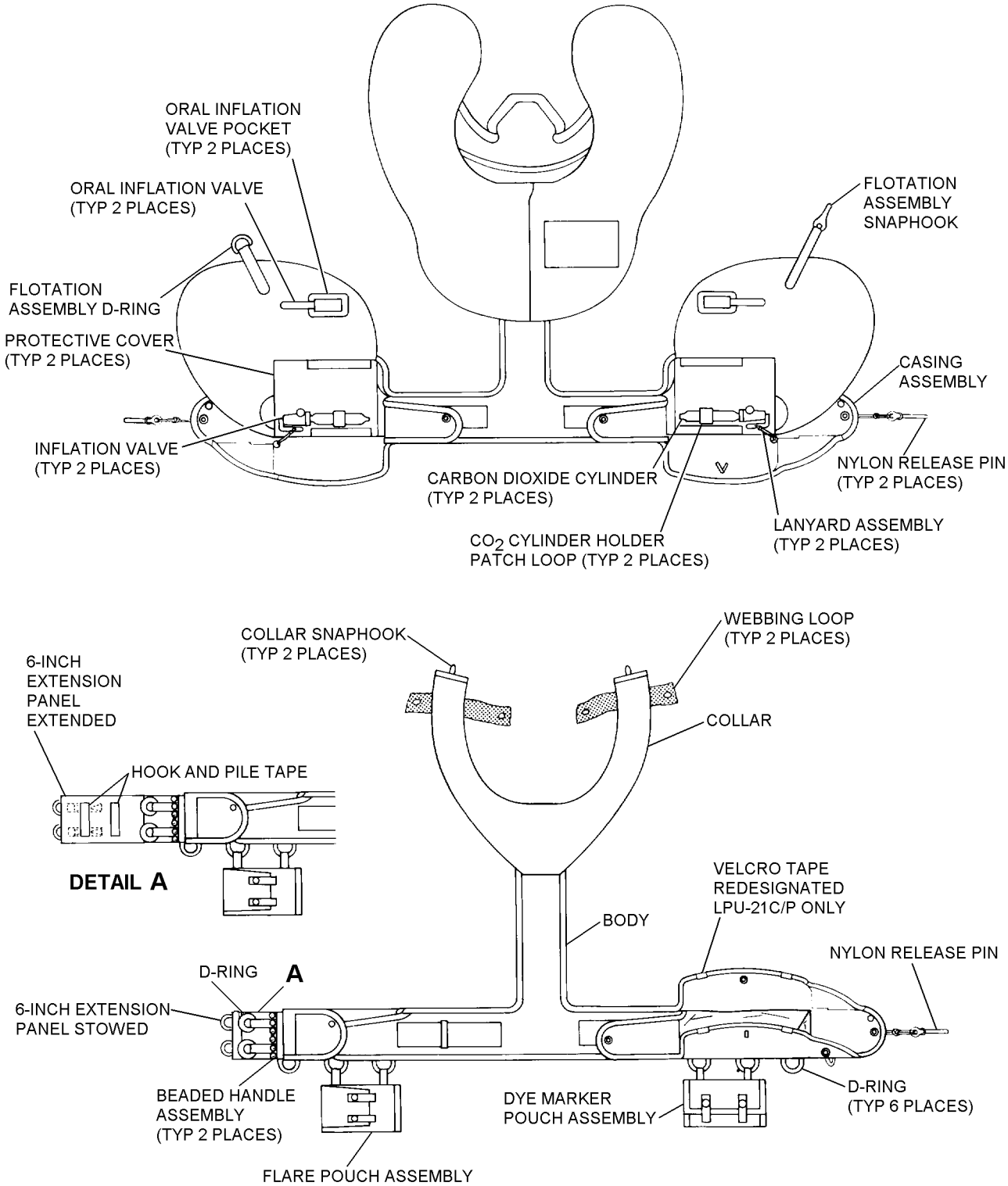

Figure 17-2. LPU-27/P22P-7(V) Life Preserver Assembly, Parts Nomenclature

Table 17-1. LPU-27/P22P-7(V) Survival Items

Description	Quantity Required	Reference Number	NIIN	SM&R Code
Signal, Smoke and Illumination, Marine MK-124 MOD 0 (Note 1)	2	—	01-030-8330	PA--Z
Dye Marker (Note 1)	2	MIL-S-17980	00-270-9986	PAOZZ
Notes: 1. Optional equipment at the discretion of the Squadron Commander.				

17-7. Each waist lobe of the flotation assembly is equipped with an attachment patch used for securing the casing assembly by means of rivets. In addition, the right waist lobe is equipped with one snaphook and the left waist lobe is equipped with one D-ring. The snaphook and the D-ring are used to secure the waist lobes together after inflation. Survival item pouches are fastened to the life preserver D-rings with directional snap fasteners.

17-8. Each collar lobe of the flotation assembly is equipped with a snaphook for attachment to the survival vest D-rings (parachute risers are routed outside of the collar lobes). In addition, an inspection record patch is also provided on a collar lobe.

17-9. The casing assembly is constructed of fire retardant aramid cloth and protects the flotation assembly. The casing assembly also provides for size adjustment and attachment to the wearer. The casing assembly consists of the adjustable casing, an adjustable webbing belt, belt keepers and D-rings, and the front connector assembly. See figures 17-1 and 17-2.

17-10. The webbing belt, attached to the inside waist portion of the casing assembly, provides for waist size adjustment from 30 to 44 inches. An extension panel provides an additional six inches of webbing belt to permit wearing the LPU-27/P22P-7(V) over bulky flight clothing. The D-ring-equipped panel accordion folds to hook and pile attach points behind the D-ring end of the basic webbing belt (see figures 17-1 and 17-2). The webbing belt keeper loops retain the webbing belt and provide for attachment of the Survival Vest about the wearer's waist. In addition, there are six D-rings secured to the webbing belt keeper loops, used for attachment of the survival item pouches, a raft retaining line, and other accessories.

17-11. Hook and pile tapes, attached to the outside waist portion of the casing, are used for slack adjustment. In addition, hook and pile tapes, attached about the periphery of the collar casing and the lower edge of the back portion of the casing, are used to enclose the casing assembly about the flotation assembly.

17-12. The casing assembly is secured around the wearer's waist by the front connector assembly, which consists of two snaphooks and two D-rings backed by webbing pads for comfort.

NOTE

The extension panel is equipped with two D-rings which are used with the front connector assembly when the panel is being used.

17-13. Each inflation assembly is made up of a carbon dioxide cartridge and an inflation valve. The inflation assemblies are connected to valve stems attached to each waist lobe (each valve stem is equipped with a check valve to prevent leakage). See figures 17-1 and 17-2.

17-14. APPLICATION.

17-15. The LPU-27 is manually inflated by pulling both inflation assembly beaded handles in a natural, slightly down and straight out position from the body. This action removes the retaining pins securing the casing assembly

about the waist lobes and actuates the inflation assemblies. The hook and pile tapes securing the casing assembly about the collar lobes will separate as the preserver inflates.

17-16. FUNCTION.

17-17. The LPU-27 is manually inflated by pulling both beaded inflation handles in a natural, slightly down and straight out position from the body. This action removes the retaining pins securing the casing assembly about the waist lobes and actuates the inflation assemblies. The hook and pile tapes securing the casing assembly about the collar lobes will separate as the preserver inflates.

NOTE

The casing must be manually opened and the flotation assembly unfolded prior to inflating a preserver the oral inflation valve.

17-18. In an emergency situation, the oral inflation valves may be used to top-off an inflated preserver, maintain inflation of a leaky preserver or inflate a chamber if an inflation assembly malfunctions. The oral inflation valves are also used to inflate a preserver with air during an inspection test and to evacuate a preserver in preparation for packing.

Section 17-2. Modifications

17-19. GENERAL.

17-20. There are no authorized modifications to the LPU-27/P22P-7(V) life preserver at this time. Common repairs and fabrication instructions to maintain serviceability are listed in table 17-2.

Table 17-2. LPU-27/P22P-7(V) Common Repairs and Fabrications

Description of Repair or Fabrication	Paragraph Number
Determination of Repairability	17-55
Casing Repair Procedures	17-57
Casing Grommet Replacement Procedures	17-58
Cementing Life Preservers	17-59
Patching Life Preservers	17-60
Replacement of Oral Inflation Valve	17-62
Recementing of Bladder Fin Seams	17-63

Table 17-2. LPU-27/P22P-7(V) Common Repairs and Fabrications (Cont)

Description of Repair or Fabrication	Paragraph Number
Fabrication of Slip-On Pockets For Life Preserver Hardware	17-64
Replacement of Flare and Dye Marker Pouch Snaphooks	17-65
Replacement of Collar Lobe Snaphooks	17-66
Flare Pouch Repair	17-67
Disassembly of the Life Preserver	17-68
Reassembly of Life Preserver	17-69
Replacement of Beaded Inflation Handle Assembly	17-70
Repair of Corroded CO_2 Inflation Valve	17-71
Replacement of Top and Bottom Gaskets	17-72
Replacement of Check Valve Assembly	17-73
Fabrication of Protective Cover Assembly	17-74
Fabrication of Collar Lobe Webbing Loops	17-75
Fabrication/Installation of Locking Pin Cover	17-76
Fabrication of Extension Panel for Casing Webbing Belt	17-77

Section 17-3. Maintenance

17-21. GENERAL.

17-22. This section contains information on inspection, disassembly, repair/replacement, testing, and reassembly of the LPU-27/P22P-7(V) life preserver.

17-23. INSPECTION.

17-24. All life preservers shall be subjected to Preflight, Special and Calendar/Phase Inspections.

17-25. The Preflight Inspection shall be performed on life preservers prior to each flight by the aircrewmember to whom the life preserver is assigned. The Preflight Inspection shall be performed on life preservers installed in aircraft prior to each flight by assigned aircrewmembers.

17-26. The Special Inspection shall be performed on all aircraft installed life preservers at intervals not to exceed 30 days. The inspection shall be performed at the organizational level of maintenance by personnel assigned to the Aviator's Equipment Branch.

17-27. Make necessary entries on appropriate form in accordance with OPNAVINST 4790.2 Series. The 30-Day Special Inspection may be recorded on a separate history card from the history card recording Calendar/Phase Inspections, functional checks, and modifications.

NOTE

The Calendar inspection interval for preservers assigned selected air reserve aircrewmembers has been extended to 180 days vice 90 days, providing preservers are stowed under controlled conditions.

17-28. The Calendar/Phase Inspection shall be performed on all life preservers prior to placing in service. The Inspection cycle thereafter shall be as follows: personal issue life preservers shall be inspected once every 90 days. Aircraft-installed life preserver inspection shall coincide with the inspection cycle of the aircraft in which installed. See applicable Planned Maintenance System (PMS) publications for specific intervals. In no case shall the interval exceed 231 days. Unless operational requirements demand otherwise, the life preserver Calendar/Phase Inspection shall be performed by the intermediate level of maintenance or above. The functional test shall be performed prior to placing in service, every fourth inspection cycle thereafter, and whenever an inflation assembly is replaced. The leakage test shall be performed during every inspection cycle. If inspection indicates damage, complete appropriate forms in accordance with OPNAVINST 4790.2 Series and forward entire assembly to supply. Refer to paragraph 17-55 for determination of repairability.

17-29. QUALITY ASSURANCE. Properly detailed procedures present a logical sequence for the inspection process. The more critical procedures are underlined to designate steps which require a Quality Assurance inspection to assure performance of specific requirements. After the underlined step is performed by the Aircrew Survival Equipmentman, the procedure shall be verified before the next step is performed. This verification shall be performed by a Collateral Duty Inspector or Quality Assurance Representative (CDI, CDQAR, or QAR). Work Center supervisors are primarily responsible for quality assurance within their centers. OPNAVINST 4790.2 Series permits supervisors to nominate their more experienced personnel to serve as quality assurance inspectors. Nominated personnel shall be screened and examined by the Quality Assurance Officer prior to their designation as Quality Assurance Inspectors or Quality Assurance Representatives by the Commanding Officer. Under no circumstances shall an Aircrew Survival Equipmentman perform his own quality assurance inspection.

17-30. PREFLIGHT/SPECIAL INSPECTION. To perform a Preflight/Special Inspection, proceed as follows:

WARNING

Ensure that the beaded inflation handles are readily accessible. Beaded inflation handles shall be secured with four snap fasteners to the life preserver end flap.

CAUTION

Do not open any sealed or safety-wired/safety tied portions of preserver for Preflight/Special Inspection.

1. Inspect exposed metal parts for corrosion and damage.

2. Inspect for presence, security of attachment and, if applicable, operation of survival items.

3. Inspect casing fabric for cuts, tears, abrasions, security of stitching, and other damage.

4. Ensure beaded inflation handles are secured to snap fasteners. Inspect safety ties on beaded inflation handles. The beaded inflation handle safety ties may be replaced without removing the life preserver from service.

5. Inspect safety ties on locking pins.

6. Inspect rivets securing flotation assembly to casing for presence and security of attachment.

7. Inspect hook and pile tape closure at collar for separation; fasten as necessary.

8. Adjust and don preserver to ensure proper fit.

9. If any discrepancy is noted, the preserver shall be removed from service and repaired in accordance with procedures in this volume.

17-31. ACCEPTANCE/CALENDAR/PHASE INSPECTION. The Acceptance/Calendar/Phase Inspection consists of the following tasks:

1. Beaded Inflation Handle Inspection
2. Case, Container/Pouch Inspection
3. Functional Test (every fourth inspection cycle)
4. Visual Inspection
5. Life Preserver Configuration
6. General Inspection
7. Markings Inspection
8. Survival Items Inspection
9. Inflation Assembly Inspection
10. Beaded Inflation Handle Pull Test
11. Leakage Test
12. Records Updating
13. Repacking

17-32. BEADED INFLATION HANDLE INSPECTION. Inspect beaded inflation handle for the following:

1. Attachment of inflation lanyard to beaded handle.

2. Attachment of locking pin lanyard to beaded handle. Overhand knot on locking pin lanyard shall be within 3/4 inch from eye of pin.

3. Corrosion on snap fasteners and ease of operation.

4. Cuts, tears, deterioration, abrasion, stains, and general cleanliness of fabric.

5. Presence of safety tie on beaded inflation handle.

17-33. CASE, CONTAINER/POUCH INSPECTION. To inspect cases, containers, and/or pouches, proceed as follows:

1. Inspect fabric for cuts, tears, deterioration, abrasion, stains, and general cleanliness.

2. Inspect seams for proper adhesion or stitching.

3. Inspect straps and loops for security and wear.

4. Inspect any other parts for wear, damage, and security.

NOTE

Life preservers missing the D-rings used to attach dye marker and flare pouches shall be considered serviceable provided the aircrewmember to whom it is issued does not desire to utilize the pouches.

5. All hardware for security of attachment, corrosion, damage, wear and, if applicable, ease of operation.

NOTE

All uni-directional snap fasteners shall be installed with the dot on the button of the snap fastener socket positioned on the side of the snap fastener to which lift must be applied to disengage the socket from the snap fastener stud.

6. Inspect uni-directional snap fastener assemblies for presence, security of attachment, proper orientation, ease of operation, corrosion, and wear.

7. If any discrepancies are found, the case, container, or pouch shall be repaired or removed from service as deemed appropriate by the inspection activity.

17-34. FUNCTIONAL TEST. To perform a functional test, proceed as follows:

CAUTION

Ensure area surrounding preserver is free of foreign objects.

1. Completely open preserver casing prior to conducting functional test. Both release pins shall be removed from their respective loops, the collar hook and pile tape fasteners shall be separated, and the waist and collar lobes shall be completely unfolded and laid out flat.

2. Actuate inflation assemblies.

3. The preserver shall fully inflate to design shape, without evidence of restriction, in less than 30 seconds.

4. If preserver does not properly inflate, determine cause. Ensure stem and valve are clean and free of foreign matter.

5. If correction is made, the preserver shall be functionally tested again.

6. Deflate preserver in accordance with paragraph 17-35 to remove all CO_2.

17-35. DEFLATION. To deflate a life preserver, proceed as follows:

Support Equipment Required

Quantity	Description	Reference Number
1	Pump, Rotary Vacuum (or equivalent)	NIIN 00-052-5015 (90567)
As Required	Hose, 3/8- or 1/2-inch Inside Diameter Rubber	—

1. Attach one end of rubber hose to vacuum pump.

2. Deflate through oral inflation valves. Unlock oral inflation valve, hold in open position, and hold vacuum pump hose against end of oral inflation valve. When compartment is collapsed, release oral inflation valve. Screw lock closed.

17-36. VISUAL INSPECTION. Prior to visually inspecting a life preserver assembly, the life preserver shall be inflated with air to 1.0 psig.

CAUTION

Remove all carbon dioxide cylinders prior to inflating life preserver with air.

NOTE

If suitable air source is not available, water-pumped nitrogen (BB-N-411) may be substituted.

17-37. LIFE PRESERVER CONFIGURATION. The life preserver shall be updated by comparing it to figures 17-1 and 17-2, and Section 17-4.

17-38. GENERAL INSPECTION. Examine life preservers for the following:

NOTE

Refer to the referenced paragraph number at end of inspection step for repair procedures.

1. Preserver fabric for cuts, tears, punctures, deterioration and abrasion. Refer to paragraph 17-57 for repair instructions.

2. Seam tapes for proper adhesion. Refer to paragraph 17-63 for repair instructions.

3. Valve inlet stems for security.

4. Oral inflation valve(s) for cracks, security, ease of operation, and corrosion.

5. Patches for proper adhesion and wear. Refer to paragraph 17-60 for repair instructions.

6. Any other parts for wear or other damage.

7. All hardware for security of attachment, corrosion, damage, wear and, if applicable, ease of operation.

8. Preservers for stains, dirt, and general cleanliness. Refer to paragraph 17-47 for cleaning instructions.

9. Cross threading and/or loose manifold nuts.

17-39. MARKINGS INSPECTION. To inspect and restore marking, proceed as follows:

Materials Required

Quantity	Description	Reference Number
As Required	Ink, Marking, Laundry, Black	SPE-92 NIIN 00-161-4229
	-or-	
As Required	Ink, Drawing, Waterproof, Yellow	A-A-59291 NIIN 00-634-6583

1. Compare markings on preserver to those listed in table 17-3.

2. Restore any faded markings.

3. Deleted.

4. Correct any markings which do not agree with the applicable table. Paint out old marking and enter new marking as close to proper position as possible.

17-40. SURVIVAL ITEMS INSPECTION. To inspect survival items, proceed as follows:

1. Inventory all items by checking items against table 17-1. Replace any missing or unsatisfactory item.

NOTE

NAVAIR 13-1-6.5, Rescue and Survival Equipment contains detailed information on the inspection of survival items.

2. Inspect all items for damage, spent contents and expired service life. Replace as necessary.

3. Operate all items which are not intended for one-time use. Replace as necessary.

17-41. INFLATION ASSEMBLY INSPECTION. To inspect life preserver inflation assemblies, proceed as follows:

1. Loosen CO_2 cylinder locking screws, if present, and remove CO_2 cylinders from valve assembly.

2. Examine inflation device, actuating lever and lanyard, and locking pins for fraying, corrosion, stripped threads, and other damage.

3. If required, remove any sharp edges from valve with a fine round file.

4. Operate actuating lever three or four times. Ensure that lever moves freely and ensure that piercing pin moves properly inside valve body. Inspect point of piercing pin for serviceability. If point is flat, rounded, dull, or otherwise worn or damaged, replace inflation assembly.

NOTE

Each time inflation assembly gaskets or inflation assembly is removed and replaced for any reason, a functional test shall be conducted. Refer to paragraph 17-34. Use new gaskets when replacing device.

5. If any discrepancy is noted in device that is not repairable in accordance with paragraph 17-71, remove assembly and install a new inflation device.

6. If CO_2 cylinder locking screws are installed, remove them.

17-42. BEADED INFLATION HANDLE PULL TEST. To perform the beaded inflation handle pull test, proceed as follows:

Support Equipment Required

Quantity	Description	Reference Number
1	Gage, Dial, Push/Pull, 0 to 50 lb	DPPH50 (CAGE 11710) or equivalent NIIN 00-473-0108

1. Ensure that CO_2 cylinder has been removed. Actuate the inflator assembly. All snap fasteners on beaded inflation handle must be fully engaged.

2. Attach gage to webbing between third and fourth bead on inflation handle.

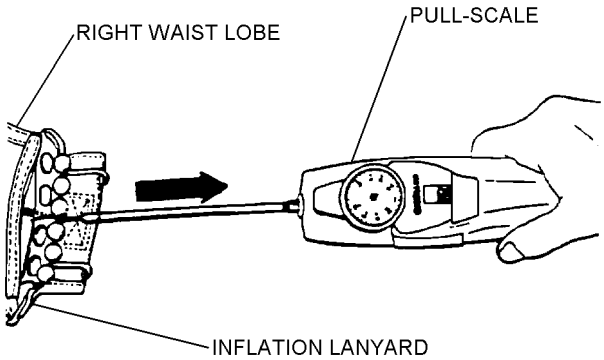

Q0042002

Step 2 - Para 17-42

3. Hold inflator steady. Slowly exert up to a 25-pound straight pull on webbing. All snap fasteners should release at or before 25 pounds.

4. If all snap fasteners do not release at or before the 25 pound limit, inspect the male and female snap fasteners for damage. Replace the entire beaded inflation handle assembly if required and repeat steps 1 through 4.

5. If the snap fasteners release properly, leave the pull scale attached, add an additional 25 pound force to check the security of the beaded handle attachment to the inflation lanyard. Examine the lanyard for frays, ruptures, thin spots, split casing and security of stitches and knots. If unsatisfactory, replace the entire beaded inflation handle. Refer to paragraph 17-70.

Table 17-3. LPU-27/P22P-7(V) Life Preserver Markings

Marking (Note 1)	Location	Letter Height
P/N 68A73H31-1 (LPU-27/P22P-7(V)) (Note 2)	Outside surface of collar delivery tube case.	Optional
CASING, LIFE PRESERVER, LPU-27/P22P-7(V) (Note 3) 974AS103-301 CONTRACT NO. [applicable number] MANUFACTURER [applicable number] DATE OF MANUFACTURE [month and year] SERIAL NO. [applicable number]	Center of casing waist section (inside)	5/16 inch 3/16 inch
CASING, LIFE PRESERVER, LPU-27/P22P-7(V) (Note 3) 975AS103-303 CONTRACT NO. [applicable number] MANUFACTURER [applicable number] DATE OF MANUFACTURE [month and year] SERIAL NO. [applicable number]	Center of casing waist section (inside)	5/16 inch 3/16 inch
DYE MARKER	Pouch (right side)	1/2 inch
FLARES	Pouch (left side)	1/2 inch
LIFE PRESERVER LPU-27/P22P-7(V) SPEC. MIL-L-81561 CONTRACT NO. [applicable number] MANUFACTURER [name of manufacturer] DATE OF MANUFACTURE [month and year] SERIAL NO. [applicable number]	Center of flotation tube waist section	5/16 inch 3/16 inch

Notes:
1. Replacement markings shall be stamped or stenciled using waterproof black ink.
2. 68A73H31-1 is the assembly part number after incorporation of extension panel modification.
3. If original part number of casing (listed) has not been blocked out leave it for identification purposes.

17-43. LEAKAGE TEST. All life preservers shall be subjected to a leakage test each Calendar/Phase Inspection. To perform a leakage test proceed in accordance with paragraph 17-45.

17-44. Test Fixture. A suggested test fixture, consisting of a three-way valve, pressure gage, and adapters for compartments being tested, is shown in Chapter 3. Fixtures must be fabricated to meet the requirements of the schematic shown in figure 17-3.

17-45. Test Procedure. To test life preservers, using test fixture shown in Chapter 3, proceed as follows:

CAUTION

Ensure test area is free of foreign objects.

1. Ensure all carbon dioxide has been removed from any preserver which has been functionally tested.

CAUTION

If 3-way valve is not used, measuring device valve must be closed when air feed valve is open.

Damage may occur to oral inflation valve if air supply pressure entering the life preserver exceeds ten (10) psi during this test.

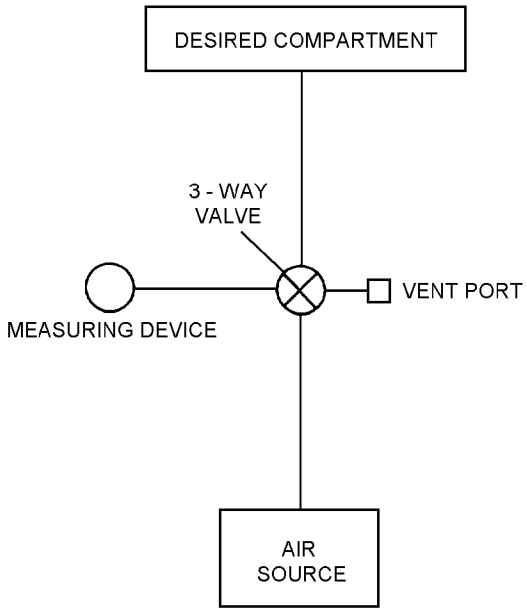

10170003

Figure 17-3. Test Fixture Schematic

NOTE

If a suitable air source is not available, water-pumped nitrogen (BB-N-411) may be substituted.

2. Unlock oral inflation valve and insert into rubber hose. Rotate valve to air supply position and inflate chamber. Alternately position valve between measuring device, vent and air supply until proper pressure of 2.0 psig is attained in both chambers.

3. The air supply shall be securely shut off and after a minimum of 15 minutes, the pressures shall be readjusted, if necessary, to the leakage test pressures. Record time.

4. Disconnect air supply and check for leaks. Ensure all valves are closed.

5. Record temperature and barometric pressure.

6. After a minimum for 4 hours after completing step 3, record test procedure of both chambers. Test pressure shall not decrease to less than 1.6 psig for a life preserver chamber, from a maximum test pressure of 2.0 psig.

7. Record temperature and barometric pressure and correct test pressure for any changes in temperature and barometric pressure. Refer to tables 17-4 and 17-5.

EXAMPLE

UNCORRECTED TEST READING 1.70 PSI

	TEMP.	BARO.
START	75° F	29.90 IN. Hg
END	70° F	29.70 IN. Hg
DIFFERENCE	- 5° F	-0.20
CORRECTION	+0.155	-0.098

TEMP. CORRECTION	+ 0.155
+ BARO. CORRECTION	- 0.098
CORRECTION	+ 0.057

UNCORRECTED READING	1.700 PSI
+ CORRECTION	+ 0.057
CORRECTED READING	1.757 PSI

Q0045007

Step 7 - Para 17-45

Table 17-4. Temperature Conversion Chart

Temperature Difference (°F)	Correction (psi)
1	0.031
2	0.062
3	0.093
4	0.124
5	0.155
6	0.186
7	0.217
8	0.248
9	0.279
10	0.310
Rise in temperature: subtract from gage reading. Fall in temperature: add to gage reading.	

8. If pressure of chamber is below 1.6 psig inflate to leakage test pressure and coat with a soap solution to locate leaks. Mark leak areas. Rinse preserver with fresh water, air dry and repair in accordance with paragraph 17-60.

9. Deflate preserver in accordance with paragraph 17-35.

10. Ensure that inflation valve lever is cocked. Install CO_2 cylinder in accordance with paragraph 17-51.

17-46. RECORDS UPDATING. Make necessary entries on appropriate form in accordance with OPNAVINST 4790.2 Series.

17-47. CLEANING AND SERVICING.

17-48. Cleaning and servicing consist of cleaning the life preserver, case, container and/or pouch, installation of the inflation valve protective covers and CO_2 cylinders and, when required, safety tieing.

17-49. CLEANING OF LIFE PRESERVER CASINGS/BLADDERS. To clean life preservers, machine washing is preferred on casings, containers, and pouches. Alternate method is by hand. Remove any survival items and other detachable items and proceed as follows:

Materials Required

Quantity	Description	Reference Number
As Required	Detergent, General Purpose	MIL-D-16791 NIIN 00-282-9699
As Required	Cloth, Lint-Free, Type II	MIL-C-85043 NIIN 00-044-9281
As Required	Talc, Technical	MIL-T-50036A NIIN 01-080-9589

CAUTION

Solvents are not to be used in cleaning life preservers.

1. Prepare solution of detergent (MIL-D-16791) consisting of 1/4 to 1/2 ounce of detergent per gallon of water.

2. Apply cleaning solution to soiled area with a spray or sponge.

3. Allow solution to remain on surface for several minutes, then agitate with a soft brush or rag.

4. Rinse surface thoroughly with water; wipe with a cloth or sponge. Repeat this application until surface is free from all solution.

5. Dry casing before use and dry bladder with a lint-free cloth (MIL-C-85043). Apply a light coating of talc (MIL-T-50036A).

17-50. INSTALLATION OF INFLATION VALVE PROTECTIVE COVERS. To install inflation valve protective covers, proceed as follows:

Table 17-5. Barometric Pressure Conversion Chart

Press. Diff. (inHG)	Corr. (psi)	Press. Diff. (inHG)	Corr. (psi)	Press. Diff. (inHG)	Corr. (psi)	Press. Diff. (inHG)	Corr. (psi)	Press. Diff. (inHG)	Corr. (psi)
0.01	0.005	0.16	0.078	0.31	0.152	0.46	0.225	0.61	0.299
0.02	0.010	0.17	0.083	0.32	0.157	0.47	0.230	0.62	0.304
0.03	0.015	0.18	0.088	0.33	0.162	0.48	0.235	0.63	0.309
0.04	0.020	0.19	0.093	0.34	0.167	0.49	0.240	0.64	0.314
0.05	0.025	0.20	0.098	0.35	0.172	0.50	0.245	0.65	0.319
0.06	0.030	0.21	0.103	0.36	0.176	0.51	0.250	0.66	0.323
0.07	0.035	0.22	0.108	0.37	0.181	0.52	0.254	0.67	0.328
0.08	0.040	0.23	0.113	0.38	0.186	0.53	0.260	0.68	0.333
0.09	0.045	0.24	0.118	0.39	0.191	0.54	0.265	0.69	0.338
0.10	0.049	0.25	0.123	0.40	0.196	0.55	0.270	0.70	0.343
0.11	0.054	0.26	0.127	0.41	0.201	0.56	0.275	0.71	0.348
0.12	0.060	0.27	0.132	0.42	0.206	0.57	0.279	0.72	0.353
0.13	0.064	0.28	0.137	0.43	0.211	0.58	0.284	0.73	0.358
0.14	0.069	0.29	0.142	0.44	0.216	0.59	0.289	0.74	0.363
0.15	0.073	0.30	0.147	0.45	0.221	0.60	0.294	0.75	0.368

Rise in pressure: add to gage reading.
Fall in pressure: subtract from gage reading.

1. Open life preserver flotation assembly, then position on a flat surface.

NOTE

Inflator not shown for clarity.

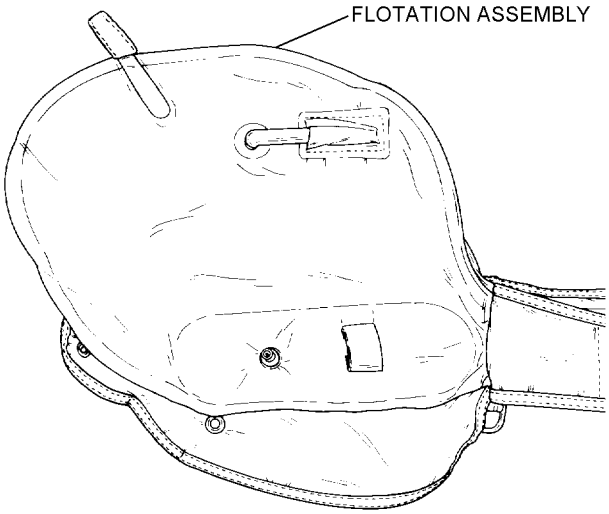

Q0050001

Step 1 - Para 17-50

2. Place inflation valve protective cover upon the life preserver. Ensure that inlet manifold stem hole and CO_2 cylinder holding loop hole are aligned according to figure 17-4.

NOTE

Inflator not shown for clarity.

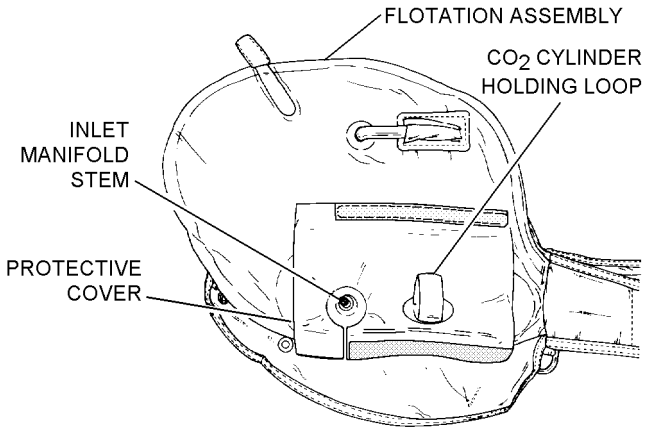

10170004

Figure 17-4. Installation of Inflation Valve Protective Cover

17-51. INSTALLATION OF CO_2 CYLINDERS. To install CO_2 cylinders, proceed as follows:

Support Equipment Required

Quantity	Description	Reference Number
1	Scale (Gram)	A-A-52021-1 NIIN 00-514-4117 or equivalent
1	Die, Cylinder Thread Chaser	1842-008-01 (CAGE 03688) NIIN 00-069-4040

Materials Required

Quantity	Description	Reference Number
1	Valve Stem and Seat Seal Kit (Note 1)	105AS100-5 (CAGE 30003) NIIN 00-498-6964
As Required	Cylinder, CO_2 Type III, 35-Gram	MIL-C-25369C

Notes: 1. Seat Seal is obtained from Valve Stem and Seat Seal Kit, P/N 105AS100-5, NIIN 00-498-6964, which contains two top, two bottom, and two seat seal gaskets.

NOTE

Weight of charged cylinder will vary according to manufacturer.

1. Weigh a charged cylinder and compare the minimum stamped weight with the scale weight. Discard and replace cylinder if scale weight is 2 grams less than minimum stamped weight.

2. Each inflation assembly consists of an inflator (MIL-I-23145, Type II), and a CO_2 cylinder (MIL-C-25369C, Type III, 35 gram).

3. Loosen inflator setscrew(s) if installed. Ensure that inflator lever is in a cocked position.

4. To assure a firm cylinder seat, conduct a cylinder thread count. Threaded portion of cylinder neck shall contain a minimum of seven full threads to assure a firm cylinder seat within valve body. Any cylinder found with less than seven full threads shall be discarded. See figure 17-5.

CAUTION

Steel threads on CO_2 cylinder can cause damage to aluminum threads on inflator if cylinder is not carefully threaded. If binding occurs during installation of cylinder, use thread chaser dye on cylinder thread to cut free excessive cadmium plating. Reinstall cylinder. If binding still occurs, replace cylinder.

5. After performing functional test, insert a new seat seal gasket from kit. At intermediate inspection intervals, inspect condition of gasket and replace if necessary.

6. Install CO_2 cylinder into inflator body as far as hand twisting will permit.

NOTE

When replacing CO_2 cylinder to inflator, ensure that CO_2 cylinder passes through the holding patch loop.

Do not install setscrews in LPU-27/P22P-7(V) life preservers.

7. Close inflation valve protective covers; then secure with hook and pile tape provided. See figure 17-4.

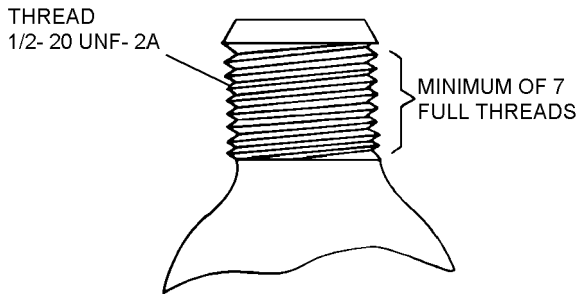

10170005

Figure 17-5. Cylinder Thread Count

17-52. REPAIR/REPLACEMENT.

17-53. This section contains instructions for the repair or modification of various components or subassemblies of life preservers to ensure that appropriate items of equipment remain in Ready For Issue (RFI) status. Reference numbers for parts which are defective, corroded or worn and require replacement are included in the applicable paragraph of this section. Other replacement parts, such as carrying cases and personal survival equipment, also listed.

17-54. Replacement of easily removed assembly components such as CO_2 inflation valves, survival items, are authorized in addition to repair and replacement procedures documented in this section. The life preserver shall be subjected to a functional and leakage test each time CO_2 inflation valves are removed and replaced for any reason, and each time inflation valve gaskets are replaced.

17-55. DETERMINATION OF REPAIRABILITY. Patching of holes, cuts, tears or punctures 1-inch square or less are the only repairs authorized in a life preserver bladder.

17-56. Life preserver shall be considered beyond repair for any of the following reasons:

1. Porous fabric areas on flotation bladder.

2. Split or open bladder seams with the exception of non-leaking bladder fin seams.

3. Leakage test failure resulting from other than repairable cut, tear or puncture.

4. Holes, cuts, tears or punctures within 1-inch of flotation bladder seams.

5. Deterioration of the rubberized fabric caused by oil, grease, or any other foreign substance.

6. Deterioration of the rubberized fabric caused by a heavy mildewed condition.

17-57. CASING REPAIR PROCEDURES. To repair casings, proceed as follows:

Materials Required

Quantity	Description	Reference Number
As Required	Thread, Nylon, High Temperature Resistant, Sage Green	MIL-T-83193 NIIN 00-405-2252
	-or-	
As Required	Thread, Nylon, Type II, Size E, Sage Green	V-T-295 NIIN 00-204-3884
As Required	Cloth, Aramid, Non-melting, Type 456, Class I, Sage Green	MIL-C-83429 NIIN 01-147-2064
As Required	Tape, Hook, Sage Green, Type II	MIL-F-21840 NIIN 00-405-2266
As Required	Tape, Pile, Sage Green, Type II	MIL-F-21840 NIIN 00-405-2263

1. Minor holes, rips, tears, or abrasions in casing assembly may be repaired if they do not exceed 2 inches.

2. Repair or replace loose or damaged hook and pile tape as required.

3. Remove bladder in areas being repaired.

4. For all repairs plus loose or broken stitching use 6 to 8 stitches per inch and back stitch one half inch.

5. Casing assembly worn beyond economical repair shall be discarded.

17-58. CASING GROMMET REPLACEMENT PROCEDURES. To replace casing grommet, proceed as follows:

Support Equipment Required

Quantity	Description	Reference Number
1	Punch, Cutting, 3/16″	3GGG-P-833 NIIN 00-180-0941
1	Pencil, Solder	W-S-570 NIIN 00-204-3855

Materials Required

Quantity	Description	Reference Number
1″	Tape, Nylon, Sage Green, 1″ Wide	MIL-T-5038 NIIN 00-753-6144
	-or-	
1 1/2″ X 1 1/2″	Cloth, Aramid, Sage Green, Type 456, Class I	MIL-C-83429 NIIN 01-147-2064
2	Grommet, Brass, Size 00	MS20230B20 NIIN 00-291-0302

1. Remove bladder in areas being repaired.

2. Remove loose grommet.

3. Reinforce worn grommet hole in casing by using either nylon tape or aramid cloth.

a. Prepare reinforcing material.

(1) Cut and sear edges of a 1″ piece of nylon tape

or

(2) Cut a 1 1/2″ X 1 1/2″ piece of aramid cloth and fold under 1/4″ on all edges.

b. Sew reinforcing material to outside of casing, centered where possible over original grommet location. Use a cross boxstitch with 6 to 8 stitches per inch, 1/8 inch from edge.

4. Install new grommet.

a. Locate original grommet hole. Cut hole in reinforcing material using 3/16″ cutting punch.

b. (For nylon tape only.) Carefully sear hole to prevent fraying using solder pencil.

c. Install grommet and washer using 00 grommet setter and base.

17-59. CEMENTING LIFE PRESERVERS. Cementing of life preservers shall be performed as follows:

Support Equipment Required

Quantity	Description	Reference Number
1	Roller, Wooden	GGG-R-00620 NIIN 00-243-9401

NOTE

Toluene shall be the primary solvent used in the fabrication or repair of this assembly. MEK may be used if toluene is not available. Always use solvents sparingly and wipe up excess solvents; do not allow to dry by evaporation.

Materials Required

Quantity	Description	Reference Number
1	Brush, Disposable	NIIN 00-514-2417
As Required	Toluene	TT-T-548 NIIN 00-281-2002
	-or-	
As Required	Methyl Ethyl Ketone (MEK)	TT-M-261 NIIN 00-281-2762
As Required	Cement, Class 3, Polychloroprene	MIL-A-5540 NIIN 00-142-9913
As Required	Talc, Technical	MIL-T-50036A NIIN 01-089-9589

WARNING

Do not use toluene or MEK near open flame, heat or electrical sparks. Avoid prolonged contact with skin or breathing of fumes. Use only in a well ventilated area.

CAUTION

Use only Polychloroprene adhesives and Polychloroprene-coated cloth patches on Polychloroprene-coated LPU-21/P flotation assemblies.

NOTE

Toluene or MEK must be applied vigorously to life preserver material over three years old in order to reactivate the material prior to cementing. Pigment from the material coloring staining a cloth rubbed over the treated surface will indicate the material has been reactivated. Cement shall be applied immediately after the surface has dried.

1. Clean both surfaces to be cemented with four applications of toluene or MEK. Apply toluene or MEK with back-and-forth strokes on the first and third applications, and one-way strokes on the second and fourth applications. Allow area to dry between applications.

CAUTION

The effective active period of adhesive mixtures composed of polychloroprene and an accelerator is eight (8) hours. Do not use mixture if older than eight hours.

2. Prepare only enough mixture for 8 hours. Dispose of any remaining mixture.

3. Using a disposable brush, apply cement to completely cover surfaces to be cemented. Use long, one direction strokes and complete each surface before cement becomes tacky as the brush may pull tacky cement from the surface. Allow to dry for 10 minutes.

4. Apply a second coat of cement as in step 3. Use brush strokes perpendicular to the original direction.

5. When second coat of cement has become tacky, place pieces together. If cemented area has a cut or tear, butt edges of damage before applying patch. Roll out bubbles with a wooden roller.

6. Allow cement to cure a minimum of 48 hours.

7. Dust area with talc (MIL-T-50036A).

17-60. PATCHING LIFE PRESERVERS. Patching of life preservers shall be performed as follows:

NOTE

Life preserver is not repairable if it has holes, cuts, tears, or punctures over one-inch square.

Toluene shall be the primary solvent used in the fabrication or repair of this assembly. MEK may be used if toluene is not available. Always use solvents sparingly and wipe up excess solvents; do not allow to dry by evaporation.

Materials Required

Quantity	Description	Reference Number
As Required	Cloth, Nylon, Polychloroprene-coated, Type I, Sage Green	MIL-C-19002 NIIN 00-935-1759
As Required	Adhesive, Polychloroprene	MIL-A-5540 NIIN 00-515-2246

CAUTION

Use only Polychloroprene adhesives and Polychloroprene-coated cloth patches on Polychloroprene-coated LPU-27/P22P-7(V) flotation assemblies.

NOTE

Select patch color as near as possible to color of life preserver being repaired.

1. Cut a rounded patch 1 inch larger than damage on all sides.

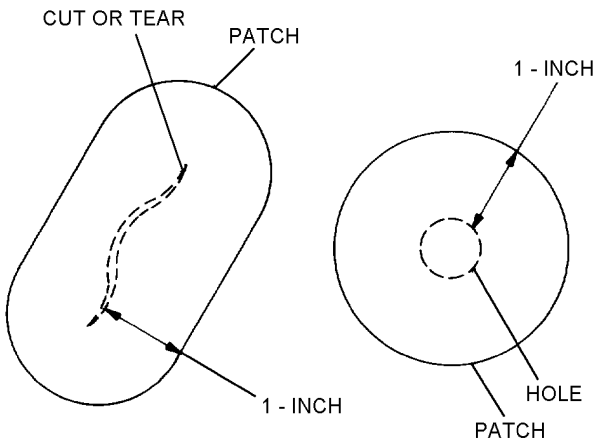

Q0060001

Step 1 - Para 17-60

2. Center patch over damage and trace an outline of patch on fabric.

3. Cement patch to damaged area in accordance with paragraph 17-59.

4. Dust area with talc (MIL-T-50036A).

5. Perform a leakage test.

17-61. INSPECTION RECORD PATCH.

NOTE

The 28th In-Service Management Panel meeting for Aviation Life Support Systems rescinded the requirement for the packer to sign the Inspection Record Patch on life preservers. The requirement for all other documentation remains unchanged. The reason for this change is that most history patches are unreadable and the packer's and inspector's names are documented on Aviation Crew Systems Records.

17-62. REPLACEMENT OF ORAL INFLATION VALVE. To replace the oral inflation valve, proceed as follows:

NOTE

Replacement oral inflation valves can only be obtained through salvage of BCM'ed or surveyed inflatable survival equipment.

Materials Required

Quantity	Description	Reference Number
1	Valve, Oral Inflation	—
As Required	Cement, Polychloroprene	MIL-A-5540 NIIN 00-142-9913
As Required	Brush, Disposable	NIIN 00-514-2417

Figure 17-6 Deleted.

Materials Required

Quantity	Description	Reference Number
As Required	Toluene	TT-T-548 NIIN 00-281-2002
	-or-	
As Required	Methyl Ethyl Ketone (MEK)	TT-M-261 NIIN 00-281-2762

CAUTION

Only toluene or MEK shall be used to clean oral inflation valve and tube. Only Polychloroprene cement (MIL-A-5540, NIIN 00-142-9913) shall be used to cement oral inflation valve into oral inflation tube.

1. Carefully cut through metal clamp securing oral inflation valve to oral inflation tube and remove the metal band and oral inflation valve.

2. If the tip of the oral inflation tube was damaged during removal of valve, trim off damaged section.

3. Clean both surfaces to be cemented with toluene or MEK. Allow areas to dry.

4. Using a small disposable brush, carefully apply a small amount of Polychloroprene cement to the surfaces of the tube and the valve which are to be cemented together.

5. Immediately place oral inflation valve into oral inflation tube. Oral inflation valve should be inserted up to valve shoulder. Inspect for proper application/cement.

6. Tightly wrap the cemented portion of the oral inflation tube with cord or wire and allow to cure for 48 hours before removing wrap.

7. Perform leakage test in accordance with paragraph 17-43.

17-63. RECEMENTING OF BLADDER FIN SEAMS. This repair shall be performed only if a flotation bladder does not leak, that is, if only outer seam around bladder is split or separating. To recement an open fin seam proceed as follows:

1. If fin seam is not leaking, recement open material surrounding flotation bladder in accordance with paragraph 17-59.

2. Perform a leakage test in accordance with paragraph 17-43.

NOTE

If bladder exhibits leakage from fin seam, bladder cell has ruptured. Dispose of life preserver after usable parts have been salvaged.

17-64. FABRICATION OF SLIP-ON POCKETS FOR LIFE PRESERVER HARDWARE. To fabricate slip-on pockets for life preserver hardware, proceed as follows:

Materials Required

Quantity	Description	Reference Number
As Required	Cloth, Nylon, Polychloroprene-coated, Type I	MIL-C-19002 NIIN 00-935-1759
As Required	Thread, Nylon Size E	V-T-295 NIIN 00-204-2884

1. Cut two pieces of cloth as shown.

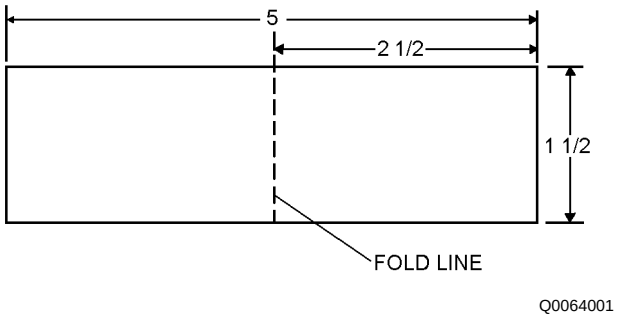

Step 1 - Para 17-64

2. Fold piece of cloth in half along fold line.

3. Sew two sides adjacent to fold forming a pocket. Use stitch type 301 stitching 8 to 10 stitches per inch.

4. Repeat steps 2 and 3 for other piece of cloth.

5. When packing life preserver, slip pockets over applicable pieces of hardware.

17-65. REPLACEMENT OF FLARE AND DYE MARKER POUCH SNAPHOOKS. To replace a broken or bothersome snaphook, proceed as follows:

Materials Required

Quantity	Description	Reference Number
12 inches	Cord, Nylon, Type I	MIL-C-5040 NIIN 00-014-6699

1. Cut through metal ring portion of snaphook.

2. Remove snaphook and discard.

3. Pass end of cord through webbing loops on pouch and preserver ring.

4. Secure cord ends with binder knot, cut excess cord, and sear ends.

17-66. REPLACEMENT OF COLLAR LOBE SNAPHOOKS. To replace the collar lobe snaphook or webbing which is attached to the snaphook, proceed as follows:

Materials Required

Quantity	Description	Reference Number
As Required	Cloth, Nylon, Polychloroprene-coated, Type I, Sage Green	MIL-C-19002C NIIN 00-935-1759
As Required	Webbing, Textile, Woven Nylon, Type Ia, 3/4-inch	MIL-W-4088H NIIN 00-782-3224
2	Snaphook, CWBC1	MIL-S-43770/1 NIIN 01-187-9402

Materials Required (Cont)

Quantity	Description	Reference Number
As Required	Thread, Nylon, Size E, Type I or II	V-T-295 NIIN 00-204-3884
As Required	Adhesive, Polychloroprene	MIL-A-5540 NIIN 00-515-2246
As Required	Toluene	TT-T-548 NIIN 00-281-2002
	-or-	
	Methyl Ethyl Ketone (MEK)	TT-M-261 NIIN 00-281-2762
As Required	Talc, Technical	MIL-T-50036A NIIN 01-080-9589

NOTE

Procedural step 1 is for replacement of worn webbing and broken snaphook. Step 2 is for replacement of the snaphook patch assembly.

1. To replace worn webbing and broken snaphook, proceed as follows:

a. Cut original attachment webbing at point where it passes through eye of snaphook and sear ends.

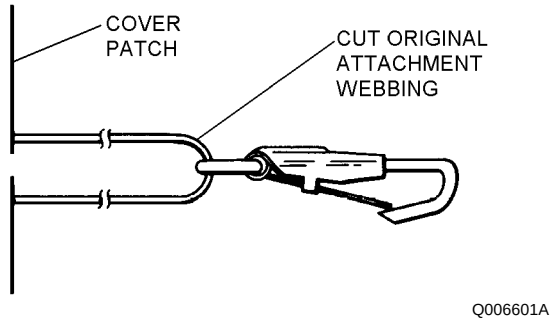

Step 1a - Para 17-66

b. Replace original snaphook with copper alloy wire snaphook.

c. Cut one 2-inch length and one 1 1/2-inch length of nylon webbing and sear ends.

d. Pass the 1 1/2-inch length of webbing through snaphook eye and stitch one row of stitching, 10 to 12 stitches per inch, close to seared ends, securing chafing webbing to snaphook eye.

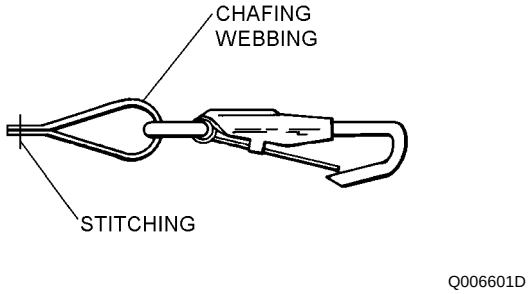

Step 1d - Para 17-66

e. Pass the 2-inch length of webbing (replacement webbing) through snaphook eye and over chafing webbing.

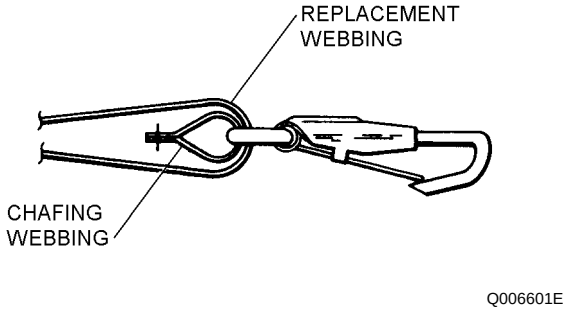

Step 1e - Para 17-66

f. Sandwich each side of original webbing between chafing webbing and replacement webbing. Stitch across webbing and backstitch forming three rows of stitching. The finished length of new webbing attachment shall be approximately 1 inch.

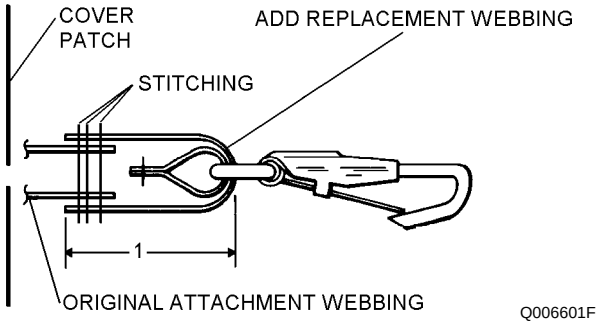

Step 1f - Para 17-66

g. Repeat steps a through f for opposite side.

2. To replace the snaphook patch assembly, proceed as follows:

WARNING

Do not use toluene or MEK near open flame, heat, or electrical sparks. Avoid prolonged contact with skin or breathing of fumes. Use only in well-ventilated area.

NOTE

Toluene shall be the primary solvent used in the fabrication or repair of this assembly. MEK may be used if toluene is not available. Always use solvents sparingly and wipe up excess solvents; do not allow to dry by evaporation.

a. Apply toluene or MEK to loosen patches. Remove patches from life preserver flotation bladder.

CAUTION

Use only Polychloroprene adhesives and Polychloroprene-coated cloth patches on Polychloroprene-coated LPU-27/P22P-7(V) flotation assemblies.

b. Fabricate cover patch from polychloroprene-coated nylon cloth.

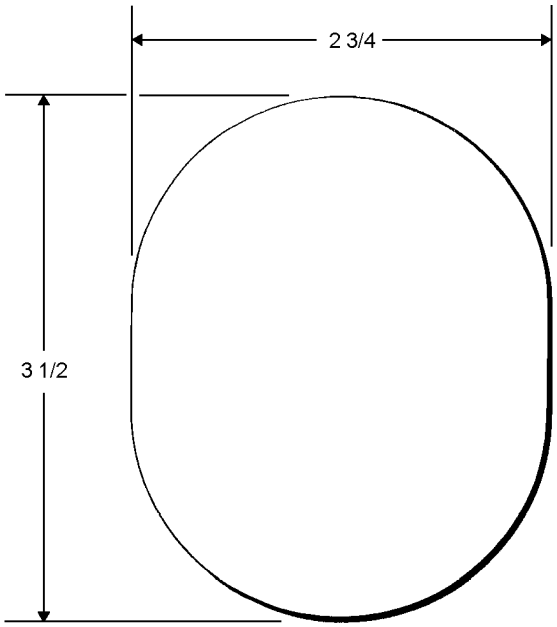

Q006602B

Step 2b - Para 17-66

c. Fabricate base patch from coated nylon cloth.

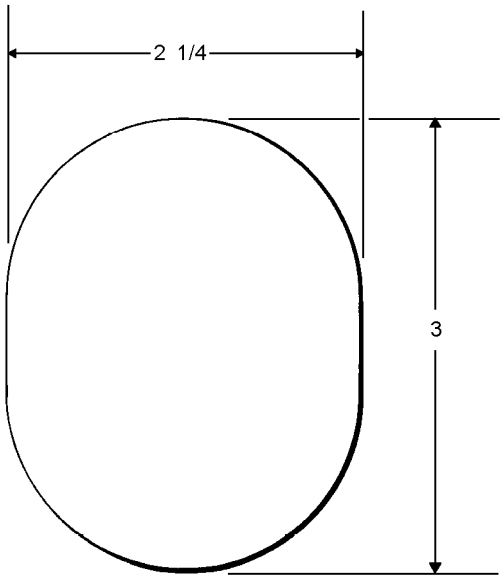

Q006602C

Step 2c - Para 17-66

d. Cut a 1/16 x 3/16-inch slot in cover patch.

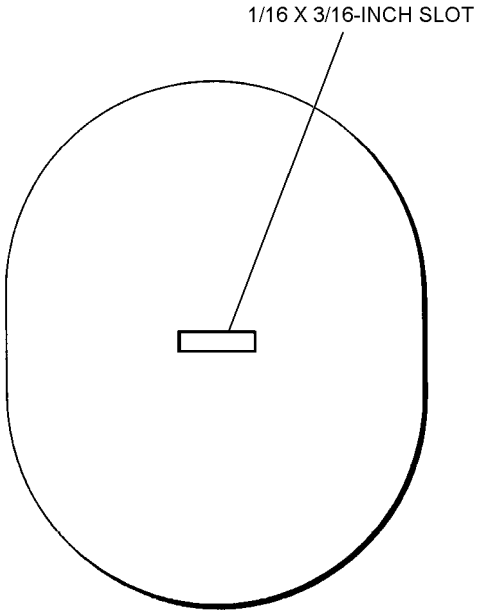

Q006602D

Step 2d - Para 17-66

e. Cut one 2 1/2-inch length and one 1 1/2-inch length of nylon webbing and sear ends.

f. Pass the 1 1/2-inch length of webbing through snaphook eye and stitch one row of stitching, 10 to 12 stitches per inch, close to seared ends, securing chafing webbing to snaphook eye.

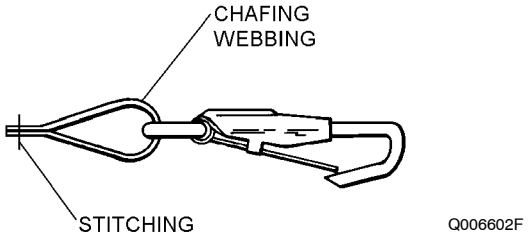

Step 2f - Para 17-66

g. Pass 2 1/2-inch length of webbing through snaphook eye and over chafing webbing.

h. Sew a single row of stitching across webbing approximately 5/8 inch from end of webbing.

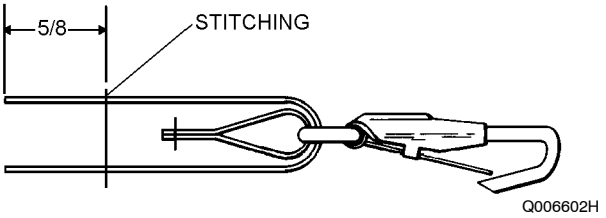

Step 2h - Para 17-66

j. Insert webbing through slot opening in cover patch and sew a 7/16 x 5/8-inch boxstitch on each end of webbing to base patch.

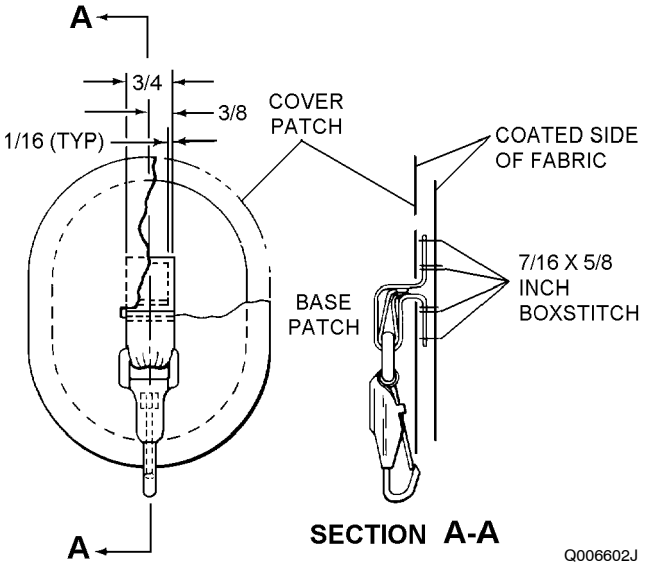

Step 2j - Para 17-66

k. Cement cover patch to base patch in accordance with paragraph 17-59.

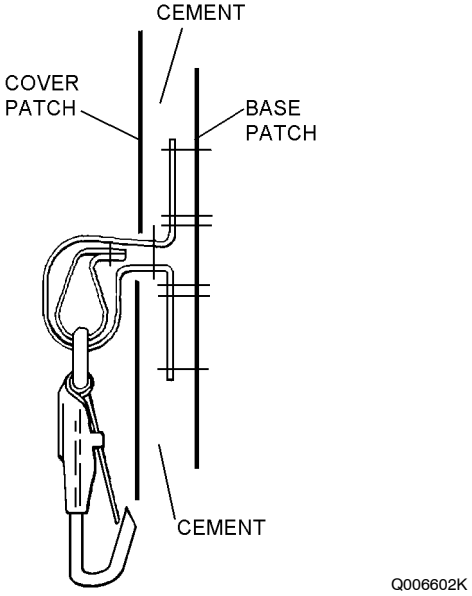

Step 2k - Para 17-66

l. Cement base patch to collar lobe on life preserver in accordance with paragraph 17-59.

m. Dust area with talc.

n. Repeat steps a through m for opposite side.

17-67. FLARE POUCH REPAIR. To repair flare pouch which will not close or is extremely difficult to close with flares installed, proceed as follows:

Materials Required

Quantity	Description	Reference Number
As Required	Thread, Nylon, Size E	V-T-295 NIIN 00-204-3884
2	Socket, Snap Fastener	MS27983-2 NIIN 00-945-2577
2	Cap, Snap Fastener	MS27983-1 NIIN 00-891-9073
3 1/2 inches	Webbing, Type VIII	MIL-W-4008

1. Remove both sets of sockets, buttons, and pull tabs from pouch closure flap. Save pull tabs.

2. Position MIL-W-4008 Type VIII webbing on outside surface of pouch flap. Cut and sear webbing ends to match contour of flap end. Boxstitch webbing to flap using size E nylon thread (V-T-295). See figure 17-7.

3. Reposition both sets of sockets, buttons, and pull tabs 3/8 inch closer to flap end. Use original pull tabs.

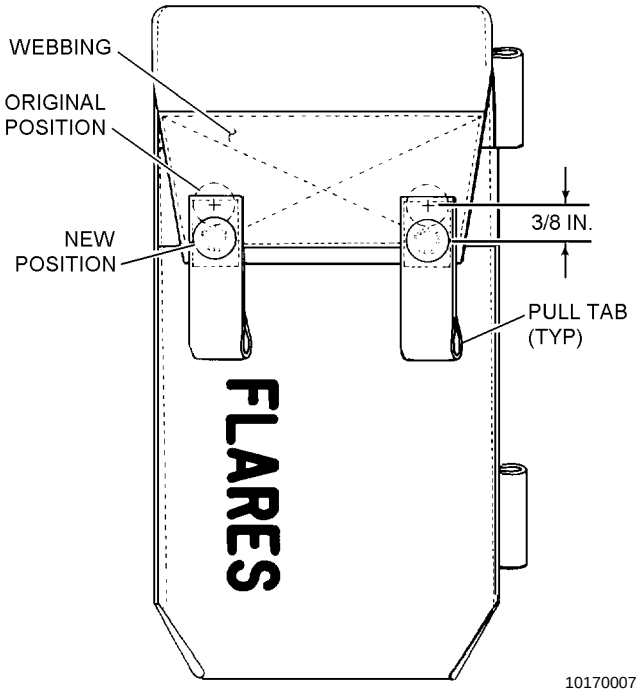

Figure 17-7. Flare Pouch Repair

17-68. DISASSEMBLY OF THE LIFE PRESERVER. To disassemble the life preserver for bladder or case repairs, proceed as follows:

Support Equipment Required

Quantity	Description	Reference Number
1	Nipper, End Cutting	—

NOTE

Life preserver shall be disassembled only to the extent necessary to perform required maintenance or inspection.

1. Remove six rivets securing each waist lobe to casing with a pair of nippers.

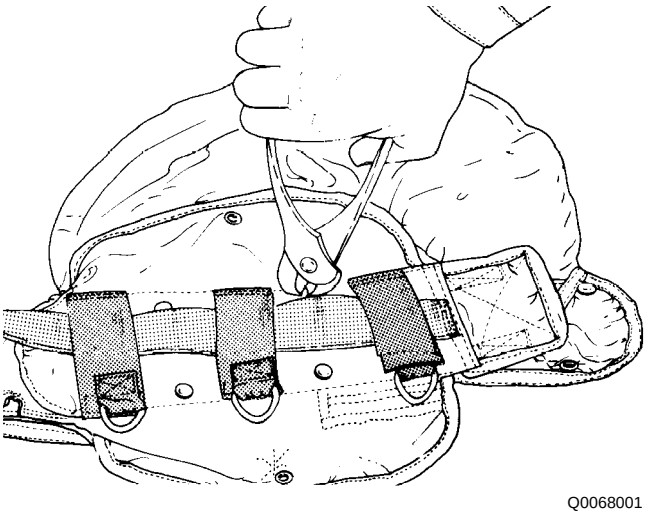

Step 1 - Para 17-68

2. Open casing and remove both inflation assemblies.

3. Reattach cap nuts to valve stems.

4. Release all hook and pile tape fasteners.

5. Fold collar lobe and waist lobes to width of casing.

6. Hold casing at collar and pull flotation assembly down and out of casing, one lobe at a time.

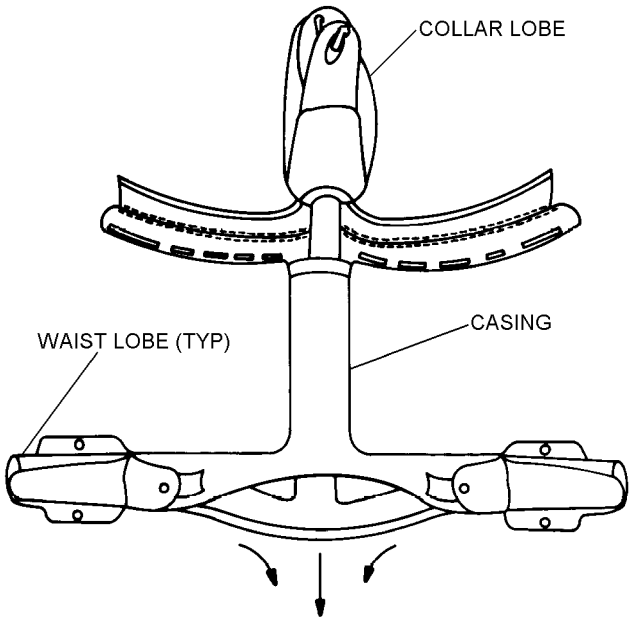

Step 6 - Para 17-68

17-69. REASSEMBLY OF THE LIFE PRESERVER. To reassemble the life preserver proceed as follows:

Support Equipment Required

Quantity	Description	Reference Number
1	Press	M114 (CAGE 83058)

Materials Required

Quantity	Description	Reference Number
12	Post, Rivet	MS27986-3B NIIN 00-281-4359
12	Cap, Rivet	MS27986-4B NIIN 00-281-2553
1	Valve Stem and Seat Seal Kit (Note 1)	105AS100-5 (CAGE 30003) NIIN 00-498-6964
3 feet	Cord, Nylon, Type III	MIL-C-5040 NIIN 00-240-2154

Notes: 1. Valve Stem and Seat Seal Kit, P/N 105AS100-5, NIIN 00-498-6964, contains two top, two bottom, and two seat seal gaskets.

NOTE

The quantity of materials listed is sufficient for reassembly of one life preserver.

1. Attach one end of a 3-foot length of Type III nylon cord to snaphook on collar lobe.

CAUTION

Ensure flotation assembly is not twisted in casing channels.

2. Insert free end of nylon cord through back channel of casing and pull collar lobe into casing. Remove nylon cord from collar snaphook. Insert waist lobes through casing waist channels.

3. When flotation assembly is in casing assembly, ensure that it is in proper configuration and is not twisted inside casing.

4. Align rivet holes in flotation assembly attachment patches (on waist lobes) over rivet holes in casing. Insert rivets through holes and seat.

NOTE

The rivet cap shall be on the inside of the casing.

5. Remove old inflation stem gaskets and replace with new gaskets. Reinstall inflation assemblies and protective covers. Pack life preserver in accordance with paragraph 17-78.

17-70. REPLACEMENT OF BEADED INFLATION HANDLE ASSEMBLY. To replace the beaded inflation handle, proceed as follows:

Materials Required

Quantity	Description	Reference Number
As Required	Handle, Beaded Inflation	975AS121-11 NIIN 01-120-4752 (CAGE 30003)
As Required	Thread, Nylon, Size E	V-T-295 NIIN 00-204-3884

1. Open snap fastener on locking pin cover; then cut and remove safety tie securing eye of locking pin to retaining loop. Carefully remove locking pin from pin keeper and retaining loop.

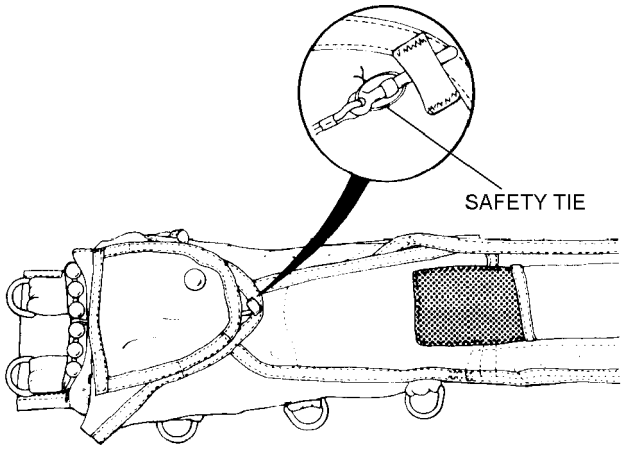

Q0070001

Step 1 - Para 17-70

2. Open flaps and unfold life preserver assembly.

3. Remove CO_2 cylinder from CO_2 inflator assembly. Retain CO_2 cylinder for reinstallation.

4. Remove inflation lanyard from inflator assembly; then unsnap beaded inflation handle from life preserver casing.

5. Secure new beaded handle inflation lanyard to actuating lever by passing lanyard through grommet in bottom casing flap and through hole in end of actuating lever. Pass lanyard back through grommet in bottom casing flap and form lark's head knot.

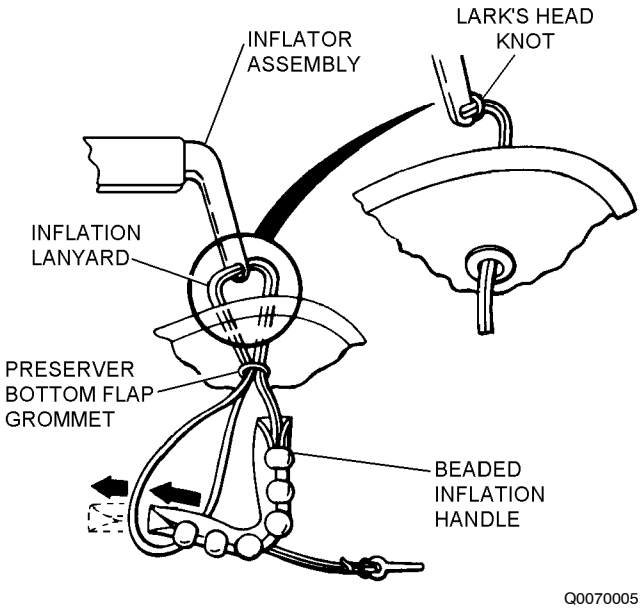

Step 5 - Para 17-70

6. Fasten beaded inflation handle to casing with snap fasteners provided; then safety-tie beaded inflation handle with one turn of size E nylon thread, single. Draw thread sufficiently to permit 1/2-inch æ 1/8-inch space between the middle beads and webbing on the preserver. Tie ends of both safety ties with a surgeon's knot followed by a square knot.

NOTE

Ensure that overhand knot on locking pin lanyard is within 3/4 inch from eye of pin.

7. Route locking pin under outboard flap cover panel and through No. 3 spur grommet.

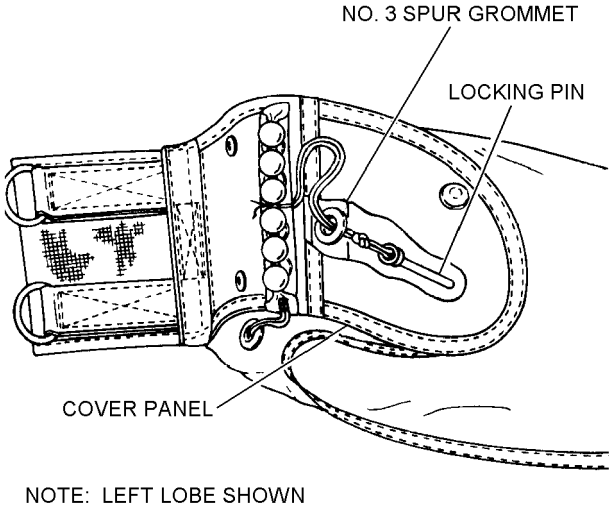

Step 7 - Para 17-70

NOTE

On some late issue LPU-21 series life preservers, the No. 3 spur grommet has been deleted.

8. Route the locking pin under the locking pin cover flap through the opening in the stitching at the base of the flap, through the retaining loop/packaging cord loop, and under the pin keeper loop.

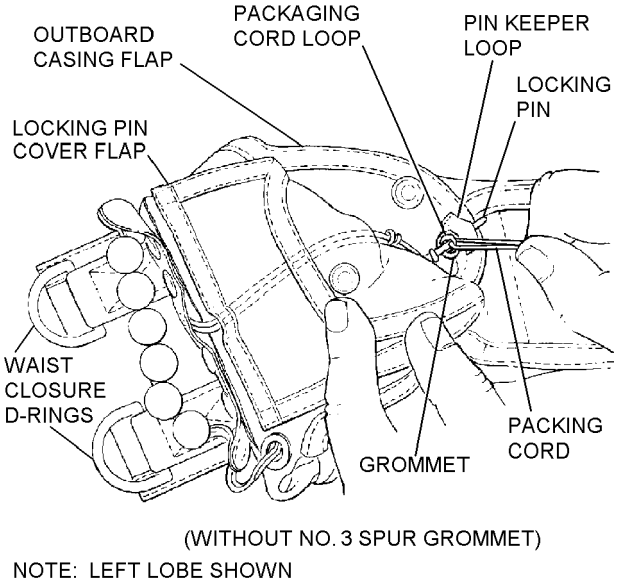

Step 8 - Para 17-70

9. Perform Beaded Inflation Handle Pull Test. Refer to paragraph 17-42.

10. Recock CO_2 inflator and install CO_2 cylinder.

NOTE

Ensure that all hook and pile tapes are securely mated.

11. Pack life preserver according to procedures outlined in paragraph 17-78.

12. Make necessary entries on appropriate form in accordance with OPNAVINST 4790.2 Series.

17-71. REPAIR OF CORRODED CO_2 INFLATION VALVE MIL-I-23145, TYPE II (NON-EJECTION A/C). To repair CO_2 inflation valve, proceed as follows:

Materials Required

Quantity	Description	Reference Number
As Required	Lubricant, Silicone	DC7 (CAGE 71984) NIIN 00-975-0712
1	Valve Stem and Seat Seal Kit (Note 1)	105AS100-5 (CAGE 30003) NIIN 00-498-6964
As Required	Emery Cloth No. 240	—
1	Valve, Inflation, Type II	MIL-I-23145 NIIN 00-012-3571
As Required	Abrasive Mat	MIL-A-9962 NIIN 00-967-5093
As Required	Corrosion Preventative Compound (Amiguard) Type I	MIL-C-85054 NIIN 01-041-1596

Notes: 1. Valve Stem and Seat Seal Kit, P/N 105AS100-5, NIIN 00-498-6964, contains two top, two bottom, and two seat seal gaskets.

1. Remove CO_2 cylinder from valve.

2. Remove inflation valve from preserver. Discard two gaskets on valve stem.

3. Remove grooved taper pin (retaining lever) from inflation valve, using awl and mallet. See figure 17-8.

4. Remove lever, spring, and piercing pin. If spring is broken or corroded, replace entire valve.

5. If piercing pin or actuating lever is corroded, remove corrosion with abrasive mat. If abrasive mat is ineffective, use 240 grit emery cloth. Do not damage O-ring on piercing pin. Wipe off any dirt or moisture from actuating lever and apply a thin coat of MIL-C-85054 and allow to dry.

6. Clean residue from actuating lever on piercing pin. Lightly coat base of piercing pin with silicone lubricant.

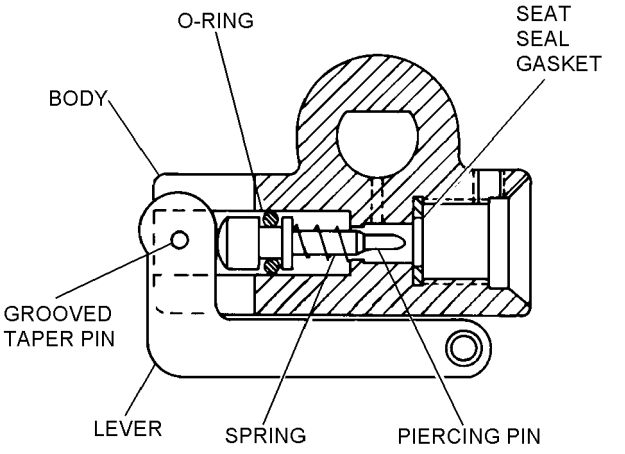

Figure 17-8. CO_2 Inflation Assembly

7. Reassemble inflation valve and operate actuating lever three or four times. Ensure that lever and piercing pin move freely.

8. If piercing pin and lever do not move freely, obtain replacement valve.

9. Reinstall inflation valve on life preserver using new gaskets.

CAUTION

Valve stem may rotate if cap nut is over torqued.

10. Install cap nut onto valve stem and torque to a value of 8 ±1 in-lb.

11. Reinstall new seat seal gasket and CO_2 cylinder.

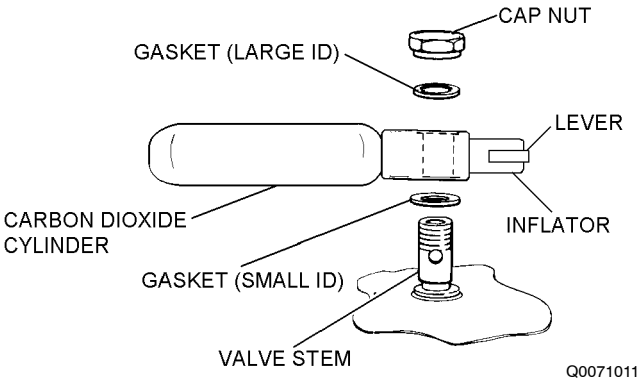

Step 11 - Para 17-71

17-72. REPLACEMENT OF TOP AND BOTTOM GASKETS. To replace the top and bottom gaskets on inflators, proceed as follows:

Support Equipment Required

Quantity	Description	Reference Number
1	9/16-inch Wrench	—

Materials Required

Quantity	Description	Reference Number
1	Valve Stem and Seat Seal Kit (Note 1)	105AS100-5 (CAGE 30003) NIIN 00-498-6964

Notes: 1. Valve Stem and Seat Seal Kit, P/N 105AS100-5, NIIN 00-498-6964, contains two top, two bottom, and two seat seal gaskets.

1. Remove cap nut and top gasket from inflator.

2. Remove inflator and replace bottom gasket.

3. Carefully place inflator onto valve stem.

4. Install top gasket onto valve stem.

CAUTION

Valve stem may rotate if cap nut is over torqued.

5. Tighten cap nut onto valve stem and torque to a value of 8 ±1 in-lb.

6. Perform functional and leakage tests on life preserver cell that was repaired. Refer to paragraphs 17-34 and 17-43.

17-73. REPLACEMENT OF CHECK VALVE ASSEMBLY. To replace a defective check valve assembly, proceed as follows:

Support Equipment Required

Quantity	Description	Reference Number
1	Tool, Valve Core	8769A or equivalent (CAGE 27783) NIIN 01-354-5423
1	Wrench, Torque	—

Materials Required

Quantity	Description	Reference Number
1	Valve, Pneumatic Inflator (Check Valve Assembly) (Note 1)	Schrader-Bridgeport P/N 8457500047

Notes: 1. Schrader-Bridgeport P/N 8457500047 must be open purchased from:
Schrader-Bridgeport Intl
205 Frazier Rd
P.O. Box 668
Altivista, VA 24517
Phone (804) 369-8875

1. If not available, fabricate a valve core tool as shown in Chapter 3.

2. Remove inflator cap nut.

3. Insert valve core tool and unscrew check valve from valve stem.

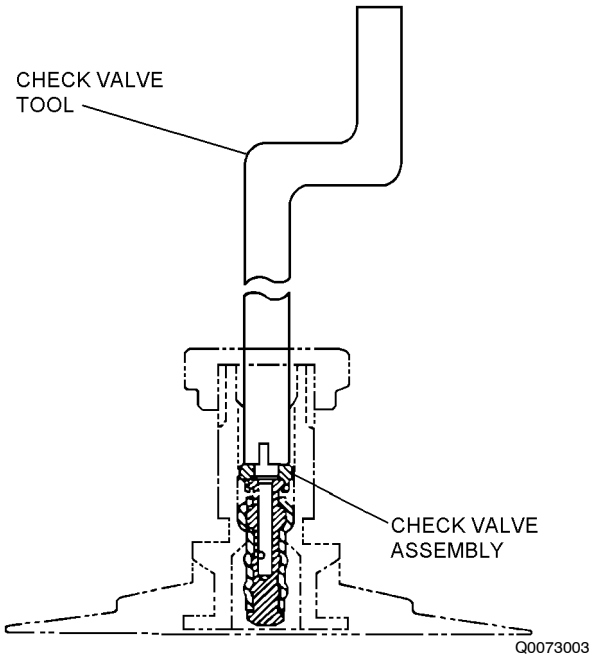

Step 3 - Para 17-73

4. Insert new check valve in valve stem and tighten with valve core tool hand tight.

CAUTION

Valve stem may rotate if cap nut is over torqued.

5. Replace cap nut and torque to a value of 8 ±1 in-lb.

6. Perform a functional and leakage test on life preserver cell that was repaired. Refer to paragraphs 17-34 and 17-43.

17-74. FABRICATION OF PROTECTIVE COVER ASSEMBLY. To fabricate a protective cover, proceed as follows:

Materials Required

Quantity	Description	Reference Number
17 x 6 inches	Cloth, Nylon, Polychloroprene-coated, Type I, Sage Green	MIL-C-19002 NIIN 00-935-1759

Materials Required (Cont)

Quantity	Description	Reference Number
12 x 5/8 inches	Fastener, Tape, Hook, Type II, MIL-F-21840	—
12 x 5/8 inches	Fastener, Tape, Pile, Type II, MIL-F-21840	—
As Required	Thread, Nylon, Type I or II, Size E, Sage Green	V-T-295 NIIN 00-204-3884

NOTE

Procedural step 1 is for a right protective cover and step 2 is for a left protective cover.

1. To fabricate a right protective cover, proceed as follows:

a. Cut an 8 1/2-inch length of cloth.

b. Cut a 6-inch length of hook and pile tape and sew to the coated side of the cloth. Use stitch type 301 stitching 8 to 10 stitches per inch.

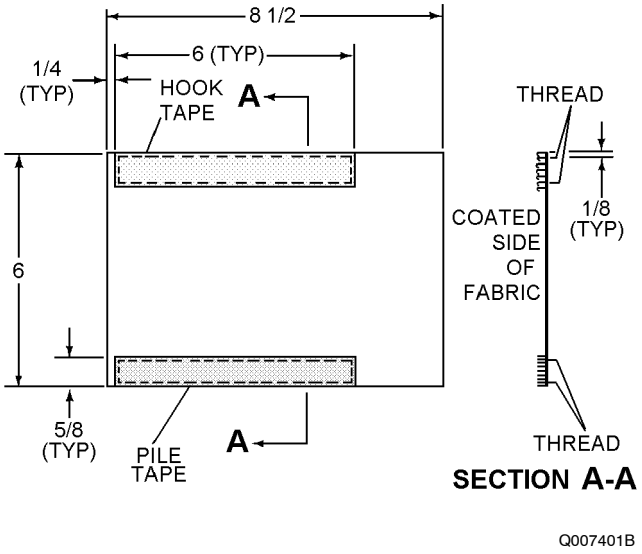

Step 1b - Para 17-74

c. Position cloth, coated side up, over cutting board and punch a 1 7/16-inch diameter hole and a 1-inch diameter hole.

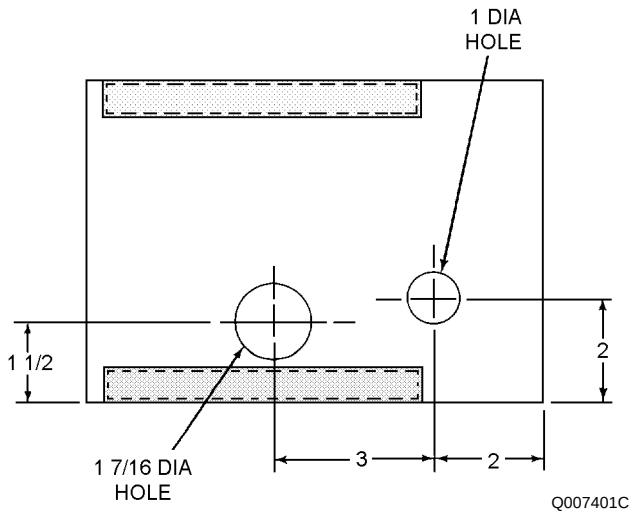

Step 1c - Para 17-74

d. Cut slit into cloth up to the 1-inch diameter hole.

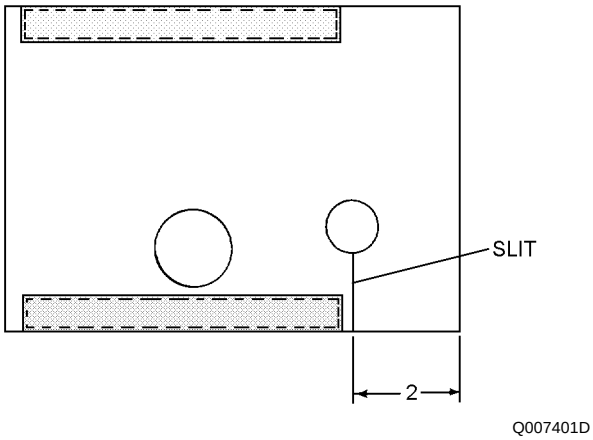

Step 1d - Para 17-74

2. To fabricate a left protective cover, proceed as follows:

a. Cut an 8 1/2-inch length of cloth.

b. Cut a 6-inch length of hook and pile tape and sew to the coated side of the cloth.

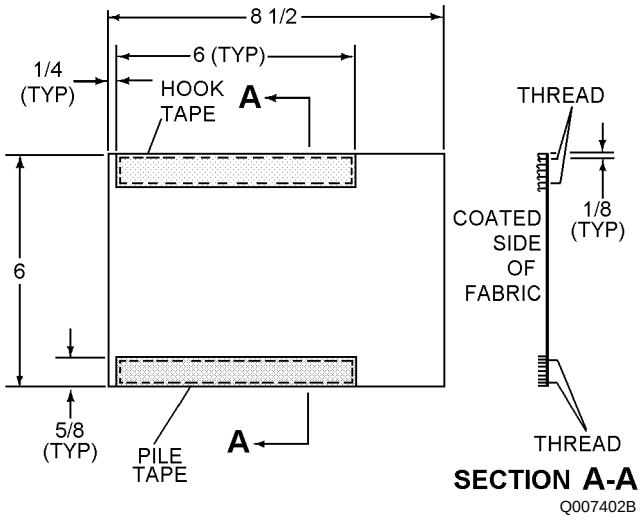

Step 2b - Para 17-74

c. Position cloth, coated side up, over cutting board and punch a 1 7/16-inch diameter hole and a 1-inch diameter hole.

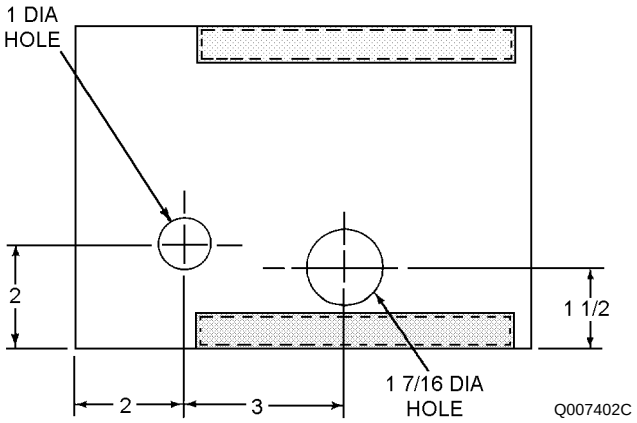

Step 2c - Para 17-74

d. Cut slit into cloth up to the 1-inch diameter hole.

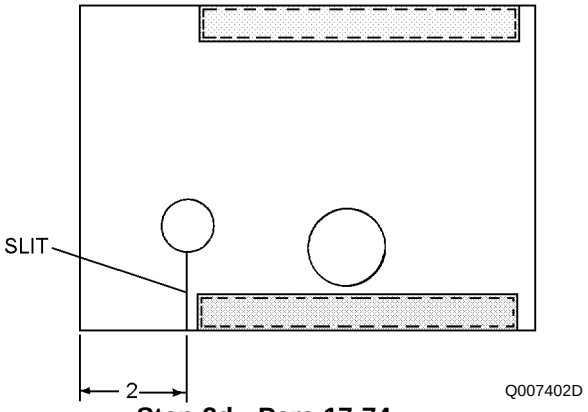

Step 2d - Para 17-74

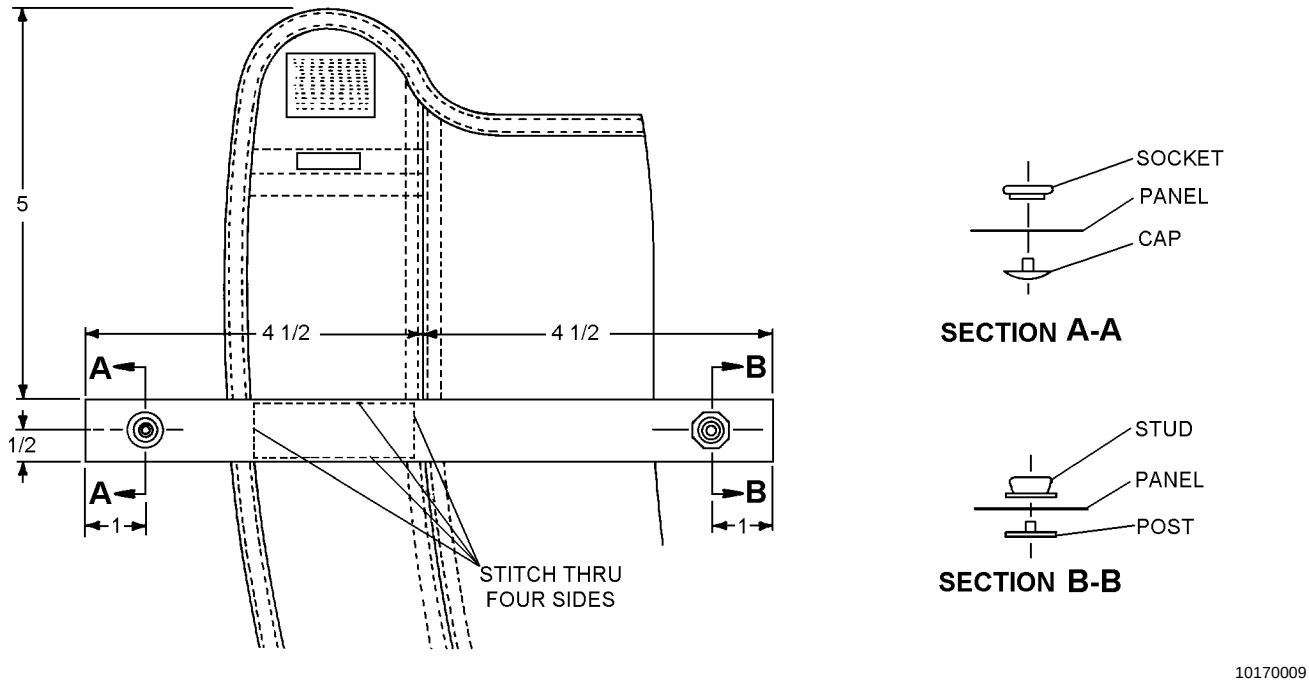

Figure 17-9. Addition of Webbing Loops

17-75. FABRICATION OF COLLAR LOBE WEBBING LOOPS. To fabricate collar lobe webbing loops, proceed as follows:

Materials Required

Quantity	Description	Reference Number
18-inch Length	Webbing, Nylon, Type IV, 1-inch Width	MIL-T-5038, NIIN 00-261-8579 (CAGE 81349)
2	Post, Snap Fastener	MS27981-5B, NIIN 00-250-6858 (CAGE 96906)
2	Stud, Snap Fastener	MS27981-4B, NIIN 00-901-9660 (CAGE 96906)
2	Socket, Snap Fastener	M527981-3B, NIIN 00-276-4966 (CAGE 96906)
2	Cap, Snap Fastener	M527981-1B, NIIN 00-276-4954 (CAGE 96906)

Materials Required (Cont)

Quantity	Description	Reference Number
As Required	Thread, Nylon Type II, Size E	V-T-295 NIIN 00-204-3884

NOTE

All stitching shall be 10 to 12 stitches per inch, size E nylon thread.

1. Cut two 9-inch lengths of 1-inch wide nylon webbing and sear ends.

2. Sew one piece of webbing to outer side of each collar lobe casing in accordance with dimensions shown in figure 17-9.

3. Position and install snap fasteners in accordance with dimensions shown in figure 17-9, and ensure proper mate.

17-76. FABRICATION AND INSTALLATION OF LOCKING PIN COVER (WITHOUT NO. 3 SPUR GROMMET). Fabricate and install the locking pin cover, for life preservers without No. 3 spur grommet, as follows:

Materials Required

Quantity	Description	Reference Number
1	Socket, Snap Fastener	MS27981-3B NIIN 00-276-4966
1	Cap, Snap Fastener	MS27981-1B NIIN 00-276-4954
As Required	Cloth Nylon, Polychloroprene-coated, Type I	MIL-C-19002 NIIN 00-935-1759
As Required	Thread, Stitching, Nylon, Type I or II, Size E	V-T-295 NIIN 00-204-3884
As Required	Tape, Binding, Nylon, 3/4-inch Wide, Sage Green Type III	MIL-T-5038 NIIN 00-176-8083

1. Cut basic locking pin cover from cloth to dimensions shown in figure 17-10. Define form of locking pin cover using appropriate end of casing waist lobe assembly as pattern.

2. Reinforce fabric with single row stitching around entire perimeter of locking pin cover.

3. Apply 3/4 inch binding tape to perimeter of cover as shown in figure 17-10.

NOTE

Binding tape may be in one continuous strip or two sections.

4. Align locking pin cover with mating surface of casing assembly and install in accordance with figure 17-11.

5. Mark snap fastener alignment and install locking pin cover, snap fastener socket and button.

NOTE

When properly aligned with casing assembly, the straight edge of locking pin cover will be butted 1/8 inch from edge of beaded inflation handle snap fastener stud installation (casing main panel subassembly).

17-77. FABRICATION OF 6-INCH EXTENSION PANEL FOR CASING WEBBING BELT (LPU-27/P22P-7(V) LIFE PRESERVER). To fabricate extension panel proceed as follows:

NOTE

Extension panels supplied in kits from ACC 523 measure nine inches installed length, vice six inches per the following instructions. Panels may be modified (lengthwise) to obtain “best” fit for aircrew. For ALSS Pool use, modifying SV-2B/LPU-27 assemblies with extension panels in several sizes (lengths) to accommodate aircrew needs is authorized. When issued together the SV-2B and LPU-27 extension panels should be of matching lengths.

Materials Required

Quantity	Description	Reference Number
As Required	Duck Cloth, Nylon	MIL-C-7219 NIIN 00-765-2863 (CAGE 81349)
As Required	Tape, Nylon, 1-inch, Type IV	MIL-T-5038 NIIN 00-261-8579 (CAGE 81349)
As Required	Tape, Hook Fastener (Green) 2-inch	MIL-F-21840 NIIN 00-405-2267 (CAGE 81349)
As Required	Tape, Pile Fastener (Green) 2-inch	MIL-F-21840 NIIN 00-405-2265 (CAGE 81349)
As Required	Thread, Nylon, Size E	V-T-295 NIIN 00-248-9715 (CAGE 81348)
2	D-Rings	MS51925-2
As Required	Ink, Marking, Laundry, Black	SPE-92 NIIN 00-161-4229

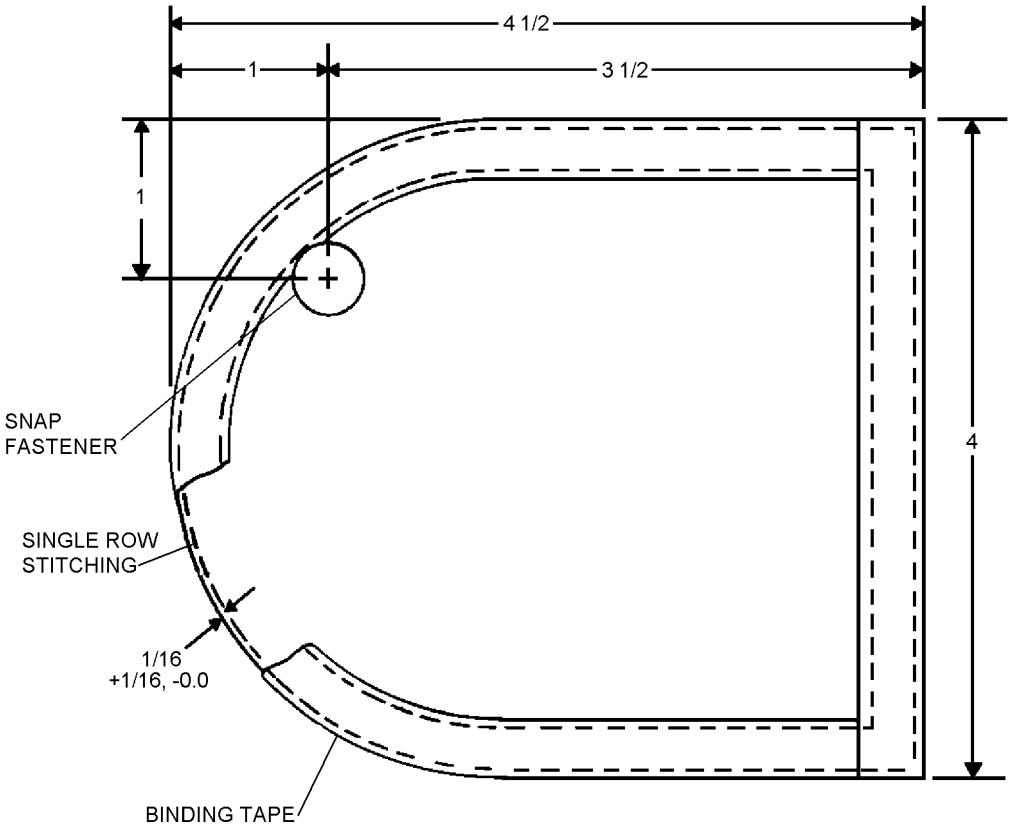

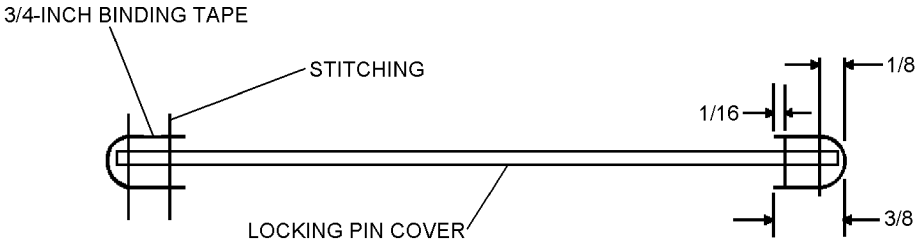

BINDING TAPE INSTALLATION

RIGHT HAND SHOWN - LEFT HAND OPPOSITE

10170010

Figure 17-10. Fabrication of Locking Pin Cover

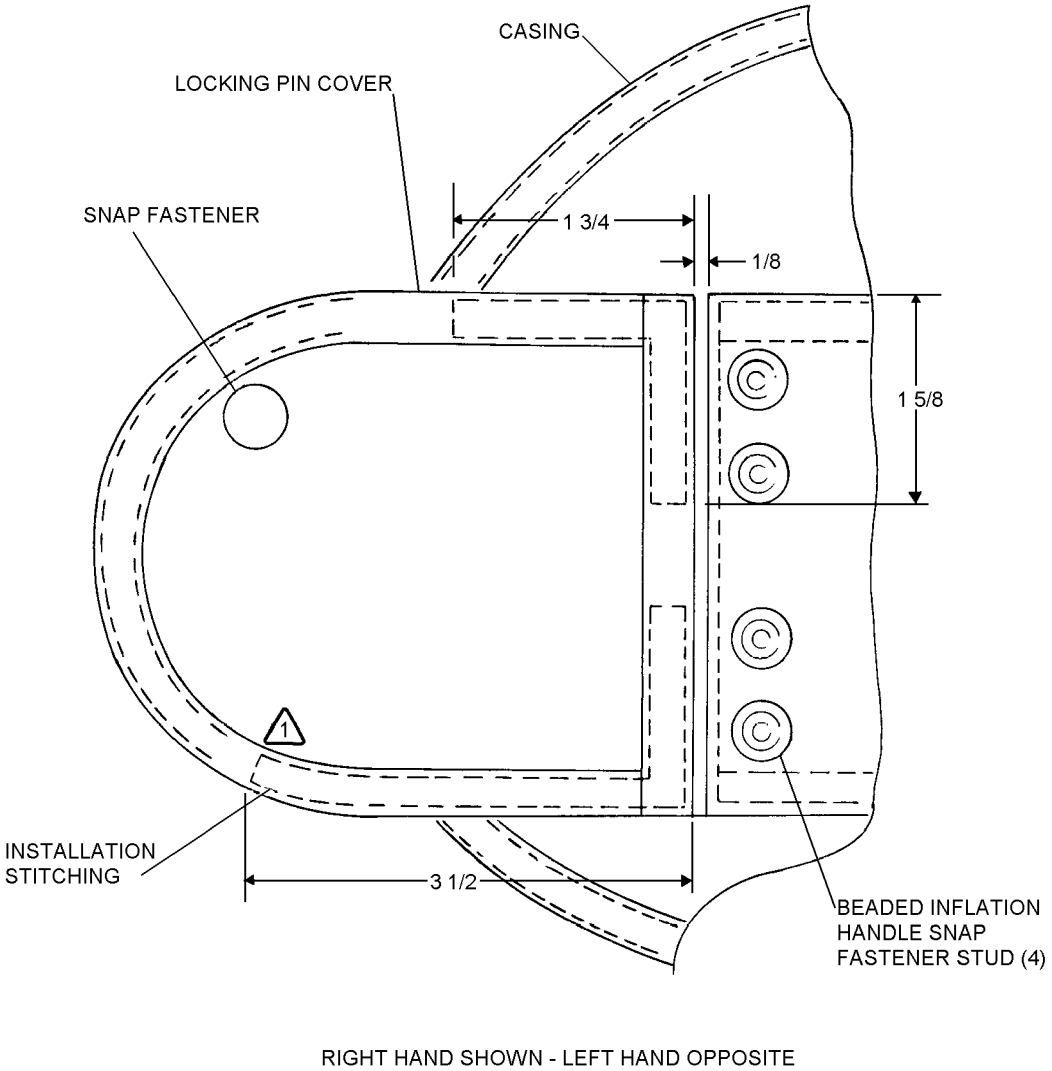

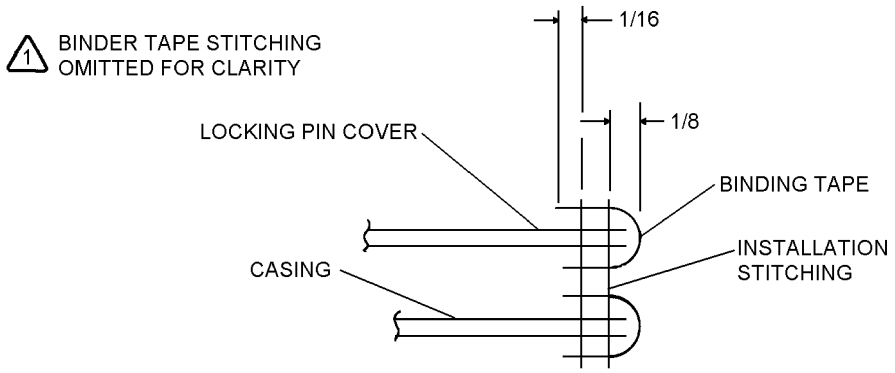

10170011

Figure 17-11. Locking Pin Cover Installation

NOTE

All stitching shall be with size E nylon thread using 8 to 10 stitches per inch, back stitching one inch.

1. Sew 3/4-inch hem along each 12-inch length of 5 1/2 x 12-inch nylon duck cloth to form 4 x 12-inch panel (figure 17-12).

2. Place panel with 3/4-inch hem down on smooth surface. Measure and mark four equal 3-inch segments (see figure 17-12).

3. Fold one 3-inch end segment under and sew in place to form 4 x 9-inch panel. Sew 1/16-inch hem along length of each side of panel and folded end.

4. Using 5 1/2-inch length of 1-inch wide nylon webbing tape, pass tape through D-ring MS51925-2 and adjust ends to equal length (2 3/4 inches).

5. Sew tape and D-ring (using boxstitch) to 3-inch fold-back section 7/16 inch from the edge of the panel with tape ends flush with end of 3-inch fold-back. See figure 17-13. Approximately 1/3 of D-ring loop should extend beyond end of panel.

6. Repeat steps 4 and 5 to attach second D-ring to opposite side of panel.

7. Sew 3 1/4-inch length of two-inch hook fastener tape to top of panel 1/2 inch from end of panel with tape ends 1/4 inch from edges of panel (figure 17-13).

8. Sew 3 1/2-inch length of two-inch pile fastener tape to top of panel 1/2 inch from end of fold-back section (figure 17-13) with tape ends 1/4 inch from edges of panel.

9. Sew 3 1/2-inch length of two-inch pile fastener tape to bottom of the panel directly beneath and in the same manner as in step 8.

10. Sew 3 1/2-inch length of two-inch hook fastener tape to bottom of the panel 1/4 inch from fold line (casing webbing and panel overlap point) with tape end 1/4 inch from edges of panel (figure 17-13).

11. Position the assembled extension panel with the attachment end (figure 17-12) under the casing webbing (figure 17-13) with D-rings of extension panel facing down as shown. Stitch sides and end of panel to casing webbing. Stitch end of casing webbing and extension panel together.

12. To stow the extension panel, see figure 17-13 and fold panel down and under so bottom pile strip mates with hook tape on bottom of casing webbing. Then fold panel forward and up so remaining pile fastener tape mates with remaining hook tape.

17-78. PACKING PROCEDURE FOR LPU-27/P22P-7(V) LIFE PRESERVER ASSEMBLY.

17-79. The LPU-27/P22P-7(V) series shall be packed by qualified personnel at the lowest level of maintenance level possible. For cleaning and servicing refer to paragraph 17-47.

17-80. To pack an LPU-27/P22P-7(V) series life preserver assembly, proceed as follows:

Materials Required

Quantity	Description	Reference Number
As Required	Talc, Technical	MIL-T-50036A NIIN 01-080-9589
As Required	Cord, Nylon Type I	MIL-C-5040
As Required	Thread, Nylon Size A	V-T-295
As Required	Thread, Nylon Size E	V-T-295

1. Ensure that life preserver has been inspected in accordance with paragraph 17-23.

2. Prior to packing, ensure that chambers are thoroughly deflated. Ensure all bladder surfaces front and rear are lightly dusted with talc.

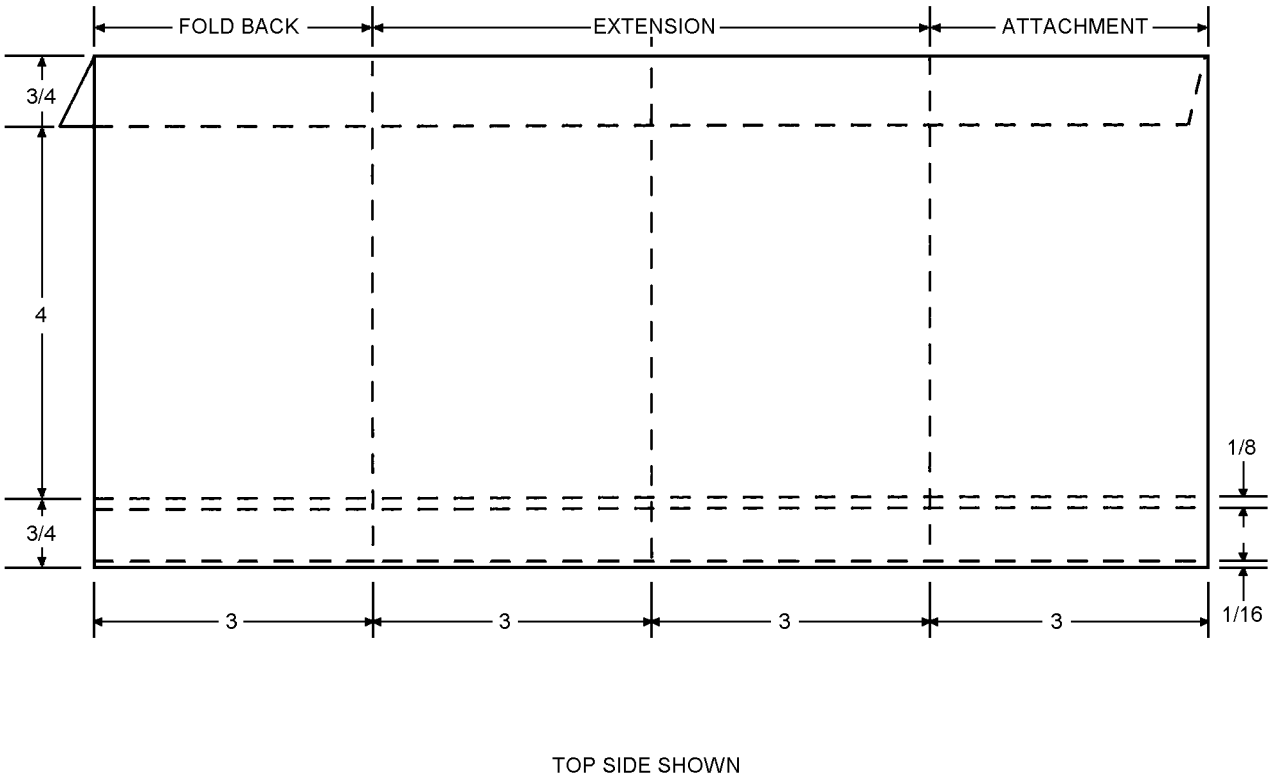

10170012

Figure 17-12. Fabrication of Casing Webbing Belt Extension Panel

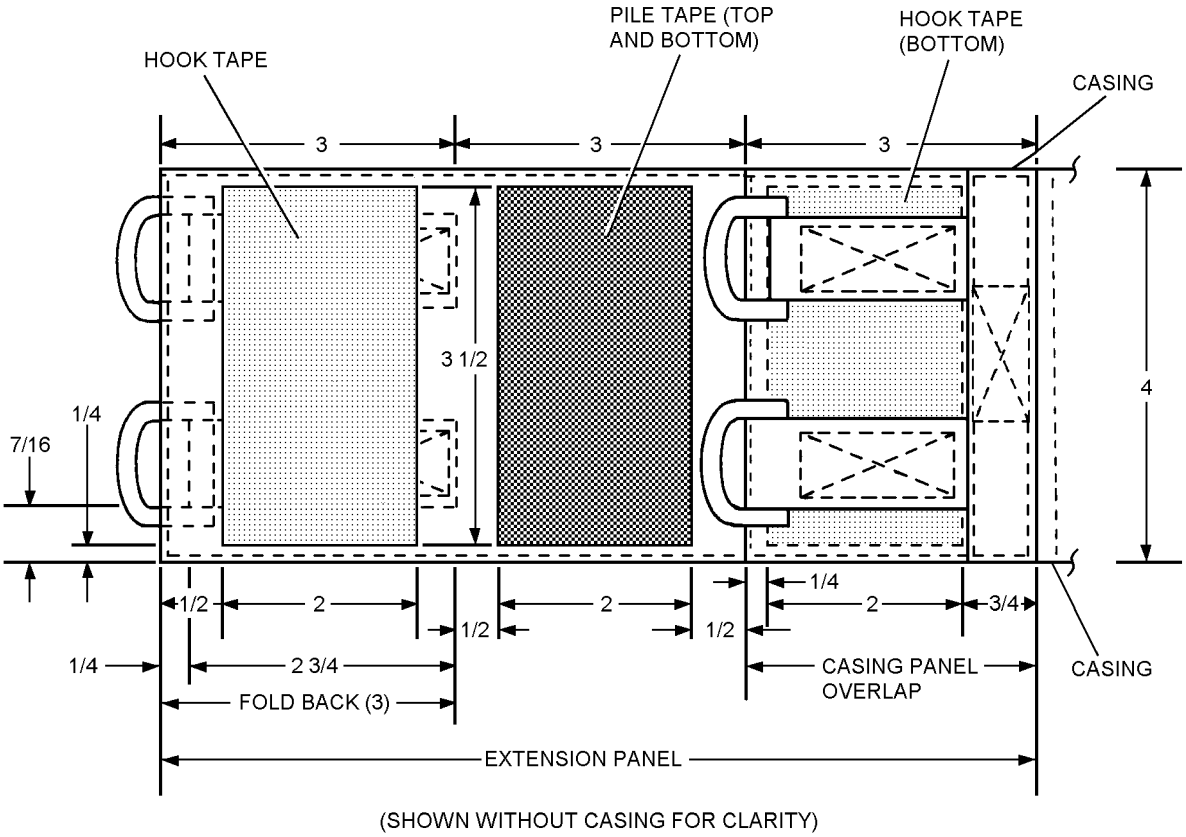

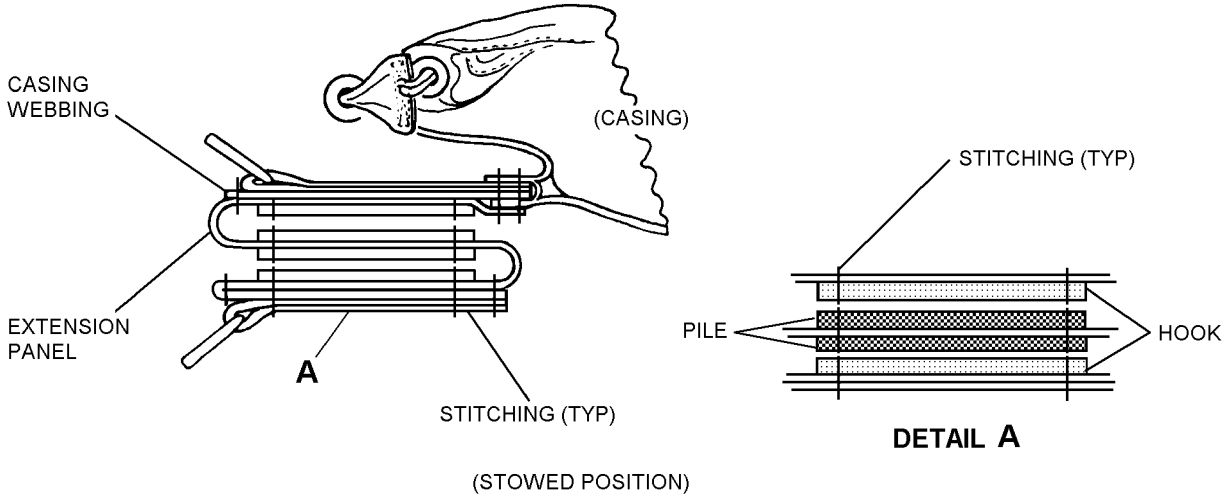

10170013

Figure 17-13. Casing Webbing Belt Extension Panel Dimensions

3. Oral inflation valve shall be locked by knurled ring and placed in oral valve pocket. Position life preserver assembly with collar panel folded down.

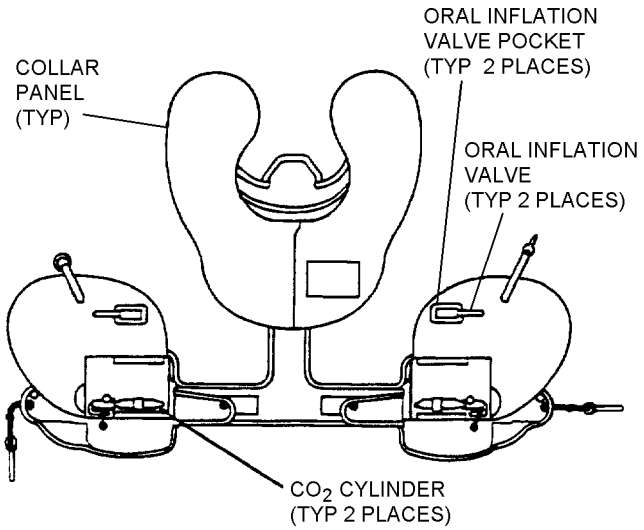

Q0080003

Step 3 - Para 17-80

4. Insert collar snaphooks through slots in collar casing and fold collar edge over slots in casing.

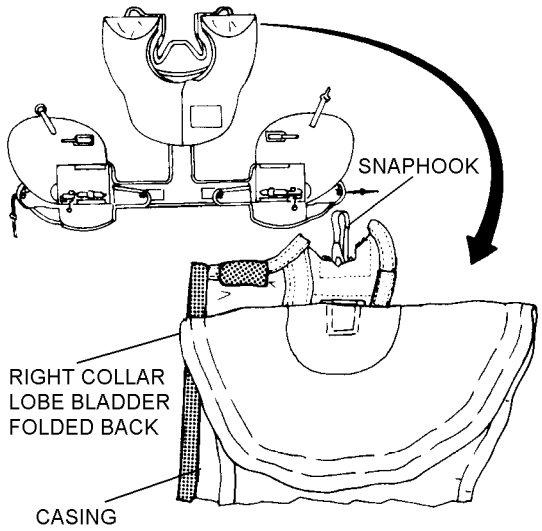

Q0080004

Step 4 - Para 17-80

5. Fold over edge of collar panels.

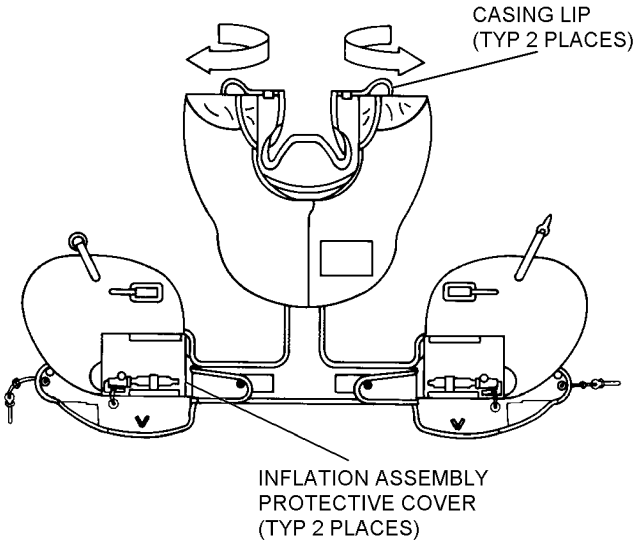

Q0080005

Step 5 - Para 17-80

6. Accordion-fold sides of collar lobes into collar casing.

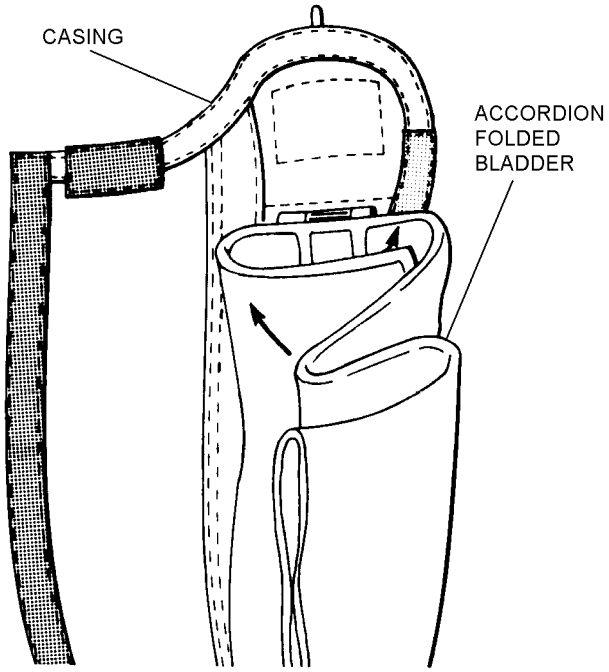

Q0080006

Step 6 - Para 17-80

7. Tuck in casing lip and secure collar casing with hook and pile tape.

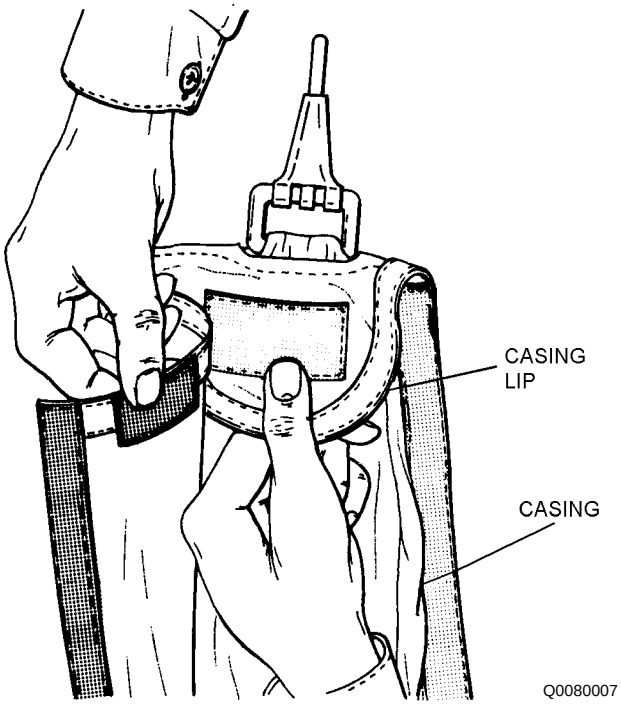

Step 7 - Para 17-80

NOTE

The unsewn 3/8- to 1/2-inch end tab of hook, tape located on the front edge of the collar lobe casing shall be attached to the mating pile tape on the collar casing cover.

8. Close collar lobe section by securing the 3/8- to 1/2-inch unsewn portion of hook tape to pile tape on casing cover.

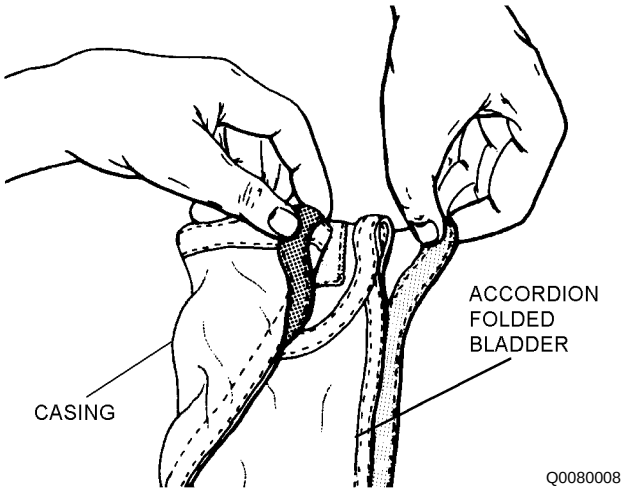

Step 8 - Para 17-80

9. Secure hook and pile tape approximately 8 inches along casing cover edge, securing the accordion-folded bladder within casing cover.

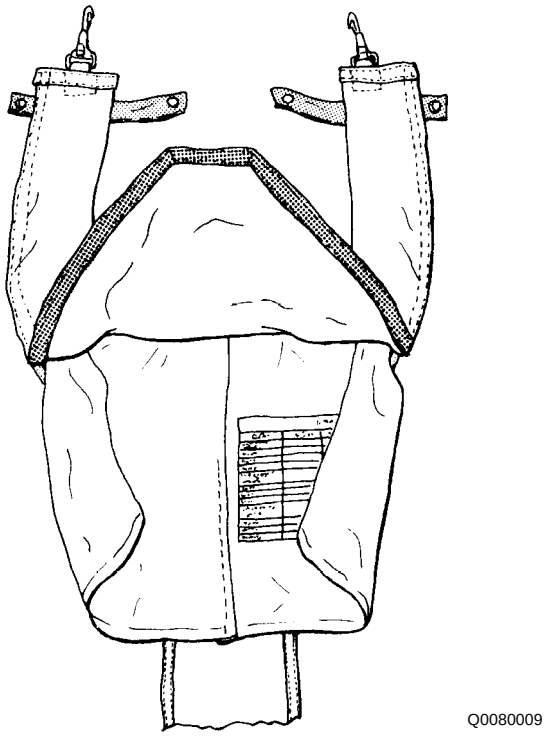

Step 9 - Para 17-80

10. Accordion-fold bottom of collar lobe into collar casing.

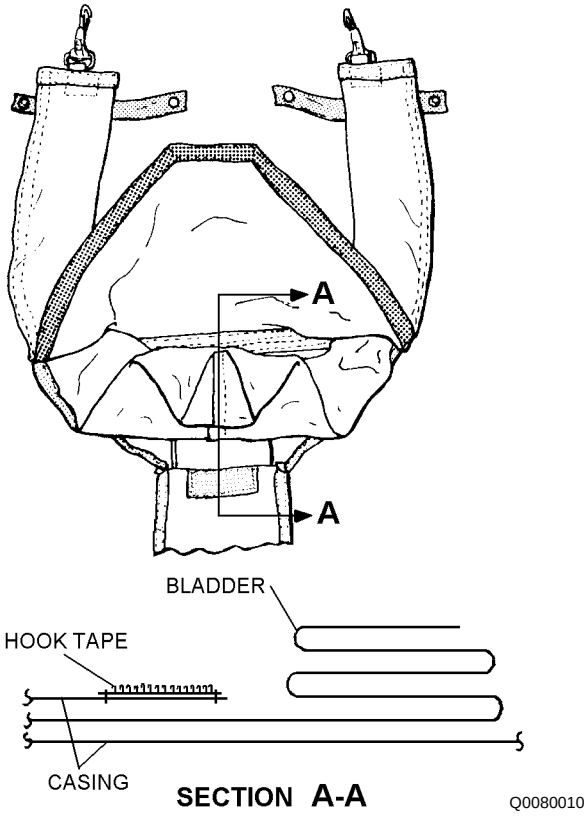

Step 10 - Para 17-80

NOTE

The unsewn 3/8- to 1/2-inch end tab of hook tape located on the rear edges of the collar lobe casing shall be attached to the mating pile tape on the collar casing cover.

11. Continue securing hook and pile tape along casing cover edge and casing lip, ending on unsewn end tabs of hook tape, completely enclosing collar lobe bladder within casing cover. Ensure all hook tape is engaged with pile tape and not exposed.

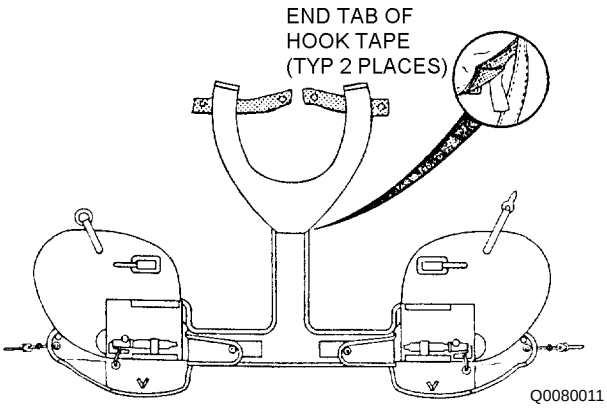

Step 11 - Para 17-80

WARNING

Ensure that rubber bands are not used to retain slip-on pockets to D-ring and snap-hook fittings.

12. Insert snaphooks and D-ring into slip-on pockets. Close protective cover around inflation assembly and secure with hook and pile tape.

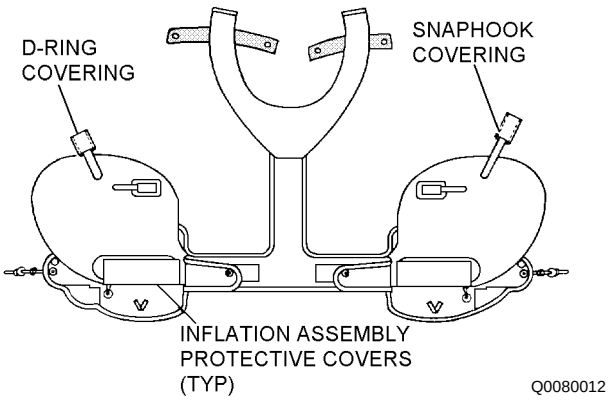

Step 12 - Para 17-80

13. Fold waist lobes over to top edge of protective covers.

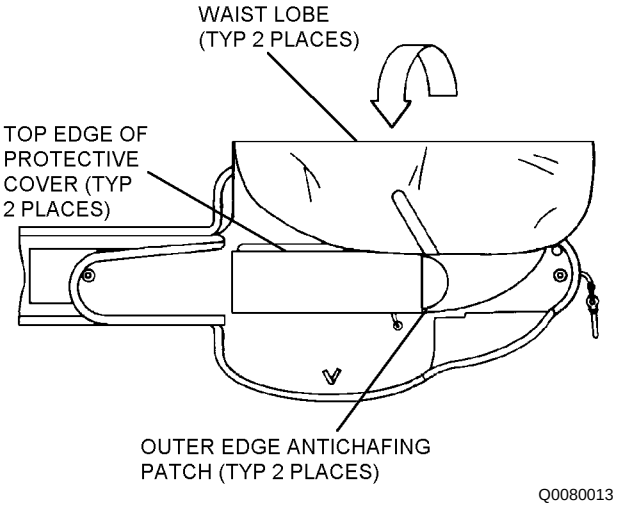

Step 13 - Para 17-80

14. Fold waist lobes over to outboard edge of anti-chafing patch.

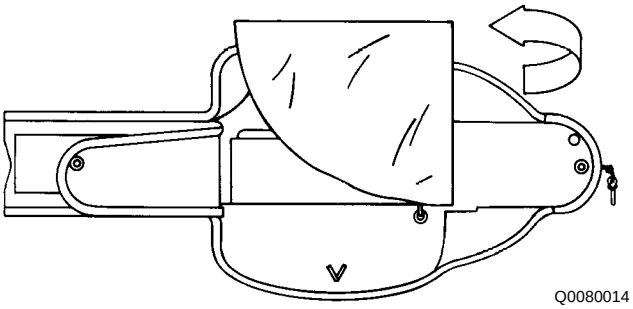

Step 14 - Para 17-80

15. Fold waist lobes over to bottom edge of protective covers.

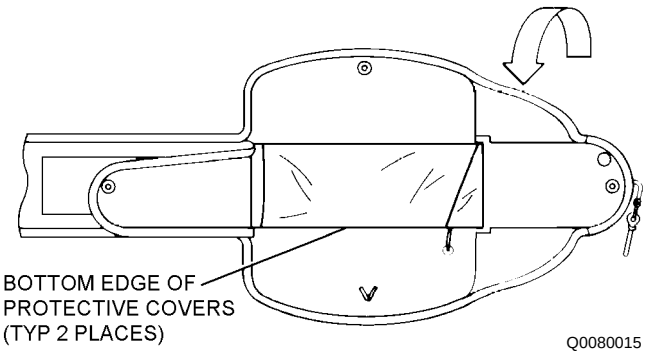

Step 15 - Para 17-80

NOTE

Packing cord shall be used to aid in closing preserver casing.

16. Fold up bottom casing flap containing retaining loop. Insert an 8-inch length of Type I nylon cord through retaining loop.

17. Pass ends of packing cord through grommet located in top casing flap. Pull retaining loop through grommet.

18. Fold inboard casing flap over, passing the packing cord through the grommet. Pull retaining loop through.

19. Route locking pin under locking pin cover flap and through No. 3 spur grommet.

20. (Without No. 3 Spur Grommet). Route locking pin through slot through slot under locking pin cover flap. Webbing panel and spur grommet have been deleted on newly procured life preserver assemblies.

WARNING

To avoid possible injury when closing casing of right waist lobe, do not place palm of hand on waist closure snaphooks.

21. Fold outboard casing flap over, passing packing cord through grommet. Pull retaining loop and into pin through retaining loop and into pin keeper loop. Remove packing cord.

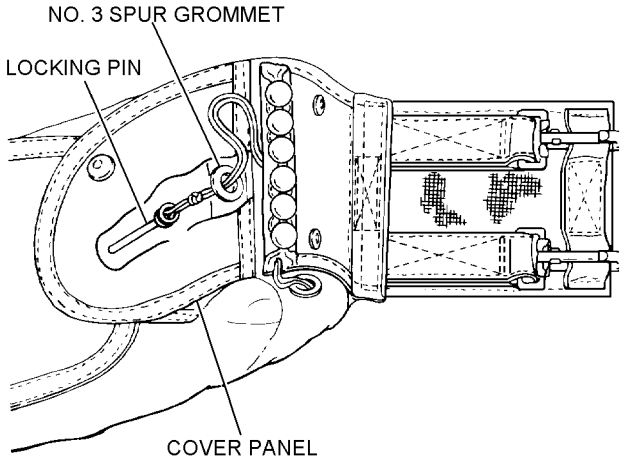

NOTE: RIGHT LOBE SHOWN

Q0080019

Step 19 - Para 17-80

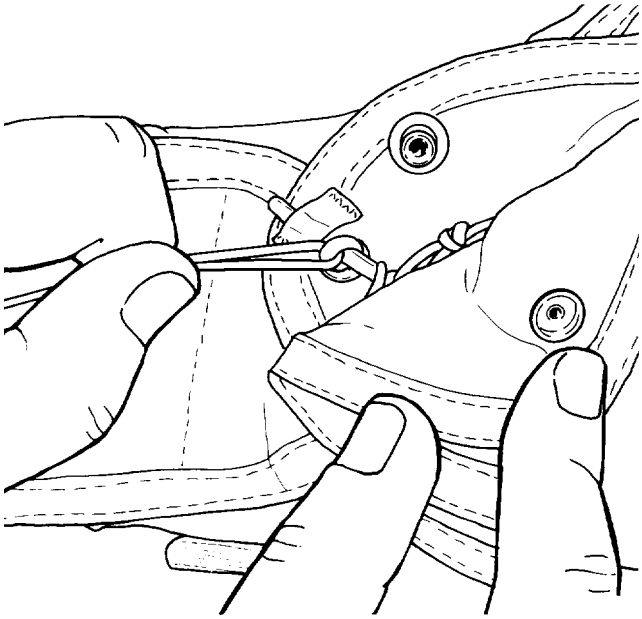

Q0080021

Step 21 - Para 17-80

22. Safety-tie eye of locking pin to retaining loop with one turn of size A nylon thread, single. Safety-tie beaded inflation handle with one turn of size E nylon thread, single. Draw thread sufficiently to permit a 1/2 ± 1/8-inch space between middle beads and webbing on preserver. Tie ends of both safety ties with a surgeon's knot followed by a square knot.

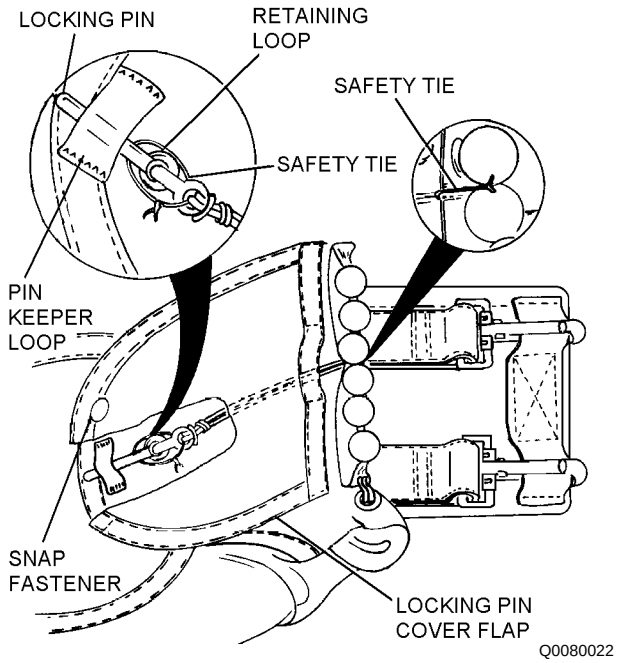

Step 22 - Para 17-80

23. Close locking pin cover panel.

NOTE

NAVAIR 13-1-6.5, Rescue and Survival Equipment, contains information on inspection and replacement of survival items.

24. When required, ensure that survival items have been inspected for expiration and damage.

NOTE

Each survival item shall be secured to the snap fastener tab of its respective pouch with a 36-inch length (DYE MARKER) or 80-inch length (FLARES) of nylon cord (MIL-C-5040, Type I). Sear ends of each cord.

25. When required, insert two dye markers into pouch labeled DYE MARKER. Insert two Marine Smoke and Illumination Signals into pouch labeled FLARES. Fake excess line and secure with rubber bands.

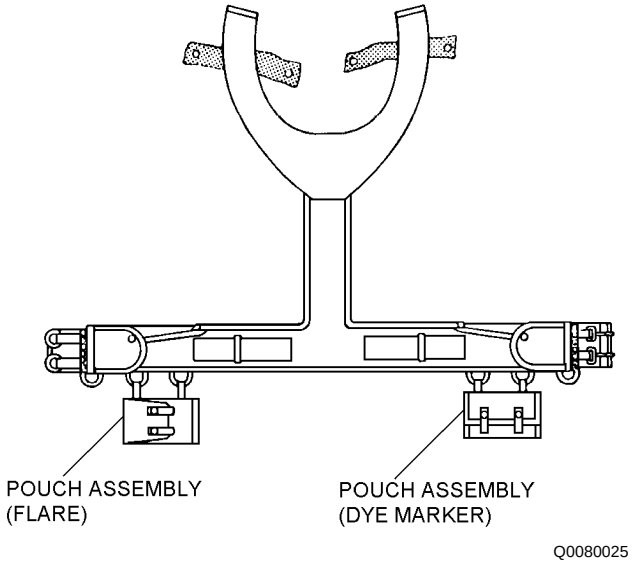

Step 25 - Para 17-80

26. Make necessary entries on appropriate form in accordance with OPNAVINST 4790.2 Series.

Section 17-4. Illustrated Parts Breakdown (IPB)

17-81. GENERAL.

17-82. This section lists and illustrates the assemblies and detail parts of the LPU-27/P22P-7(V) Life Preserver Assembly.

17-83. The Illustrated Parts Breakdown should be used during maintenance when requisitioning and identifying parts.

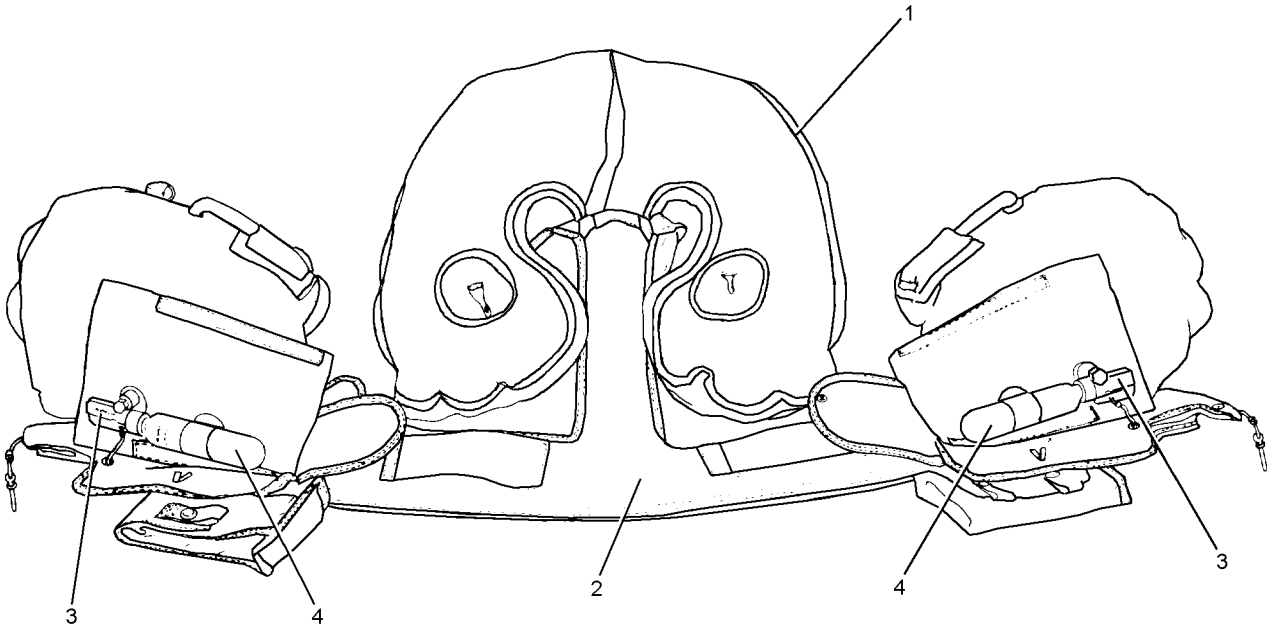

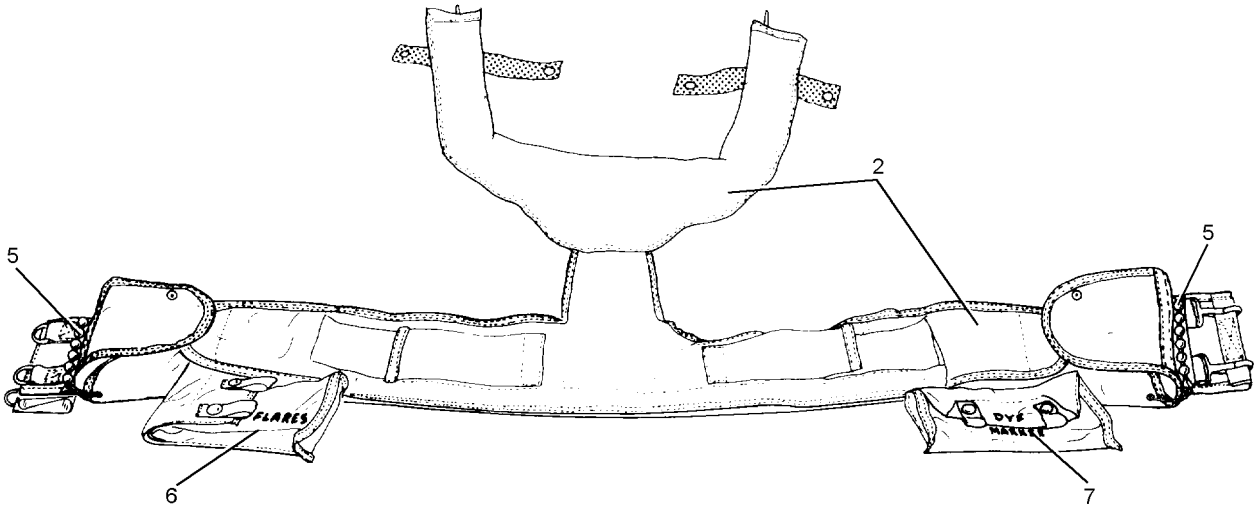

10170014

Figure 17-14. LPU-27/P22P-7(V) Life Preserver Assembly, Illustrated Parts Breakdown

Figure and Index Number	Part Number	Description 1 2 3 4 5 6 7	Units Per Assembly	Usable On Code
17-14	68A73H31-1	LPU-27/P22P-7(V) LIFE PRESERVER (Note 4) . . .	REF	
-1	68A73H1-101 (NIIN 01-120-4894)	. INFLATABLE LIFE PRESERVER LPU-21B/P	1	
	68A73H1-103 (NIIN 01-120-4894)	. INFLATABLE LIFE PRESERVER LPU-21C/P	1	
-2	975AS103-301 (NIIN 01-120-4751)	. . CASING ASSEMBLY, LPU-21B/P . . . . . . (Note 1)	1	
	975AS103-303 (NIIN 01-120-4751)	. . CASING ASSEMBLY, LPU-21C/P . . . . . . (Note 1)	1	
-3	MIL-I-23145 (NIIN 00-012-3571)	. . INFLATION ASSEMBLY, Type II	2	
	105AS100-3	. . . . GASKET, Top (30003) (Note 2)	1	
	105AS100-4	. . . . GASKET, Bottom (30003) (Note 2)	1	
	105AS100-2	. . . . GASKET, Seat Seal (Note 2)	1	
-4	MIL-C-25369 (NIIN 01-077-8773)	. . . CO_2 CYLINDER, Type III, 35 Gram	2	
-5	975AS121-11 (NIIN 01-120-4752)	. . . BEADED INFLATION HANDLE, ... Type I	2	
-6	68A73D3-61 (NIIN 00-118-6187)	. . FLARE POUCH ASSEMBLY . . . . . . (Note 3)	1	
-7	68A73D2-41 (NIIN 00-118-6186)	. . DYE MARKER POUCH ASSEMBLY . . . . . . (Note 3)	1	

Notes:
1. Casing assembly modification in accordance with ACC 523 is designated LPU-27/P22P-7(V)
2. Top, bottom, and seat seal gaskets are obtained from Valve Stem and Seat Seal Kit, P/N 105AS100-5, NIIN 00-498-6964, which contains two top, two bottom, and two seat seal gaskets.
3. Optional equipment at the discretion of the Squadron Commander.
4. 68A73H31-1 is the assembly P/N after incorporation of extension panel modification.

NUMERICAL INDEX

Part Number	Figure and Index Number	SM&R Code
MIL-C-25369	17-14-4	PAGZZ
MIL-I-23145	17-14-3	PAGZZ
105AS100-2	17-14-3	
105AS100-3	17-14-3	
105AS100-4	17-14-3	
68A73D2-41	17-14-7	PAGZZ
68A73D3-61	17-14-6	PAGZZ
68A73H1-101	17-14-1	PAOGG
68A73H1-103	17-14-1	PAOGG
68A73H31-1	17-14	
975AS103-301	17-14-2	PAGZZ
975AS103-303	17-14-2	PAGZZ
975AS121-11	17-14-5	PAGZZ

CHAPTER 18

LPU-23C/P LIFE PRESERVER ASSEMBLY

Section 18-1. Description

18-1. GENERAL.

WARNING

The LPU-23C/P life preserver contains an automatic inflation device and is configured for use only in aircraft with ejection seat systems.

18-2. The LPU-23C/P life preserver is authorized for use only by aircrew personnel operating high performance aircraft equipped with ejection seat systems. It is designed as a constant wear item for use with the SV-2B survival vest or torso harness modified by ACC 380. Survival item pouches are attached to the life preserver casing and signal flares are not initially supplied and must be individually requisitioned. See figures 18-1, 18-2 and table 18-1.

18-3. The LPU-23B/P flotation assembly may be used in conjunction with the LPU-23C/P casing assembly. This configuration has been designated LPU-23B(V)1/P. See Chapter 27.

NOTE

The use of the LPU-23C/P flotation assembly with the LPU-23B/P is not authorized.

18-4. CONFIGURATION.

18-5. LPU-21/P and LPU-21A/P life preservers were configured with the FLU-8A/P automatic inflation device and redesignated LPU-23A/P. Subsequent requisitions of the LPU-23/P series life preserver from supply were designated LPU-23B/P. Continued improvement in the structure of the LPU-21/P series life preserver resulted in the LPU-21D/P which features a heat sealed flotation bladder assembly. This new configuration, coupled with the FLU-8A/P automatic inflation device, was redesignated LPU-23C/P life preserver. The FLU-8A/P will, through attrition, be replaced by the FLU-8B/P automatic inflation device.

NOTE

The LPU-23C/P life preserver assembly weighs four pounds (without survival items) and provides a minimum of 65 pounds buoyancy.

CAUTION

Only Polyurethane adhesives and Polyurethane-coated cloth and patches shall be used on Polyurethane-coated LPU-23C/P life preserver assemblies.

18-6. FLOTATION ASSEMBLY. The flotation assembly is constructed of polyurethane-coated nylon cloth. The assembly consists of two independent heat sealed flotation chambers. One chamber consists of the left waist lobe interconnected by a channel to the right collar lobe. The other chamber consists of the right waist lobe interconnected by a channel to the left collar lobe. Attached to a valve stem in each waist lobe is an automatic/manual CO_2 inflation assembly (FLU-8B/P). Also attached to each waist lobe is an oral inflation valve. The two chambers are sewn together at the center seam flash of the collar lobes. See figures 18-1 and 18-2.

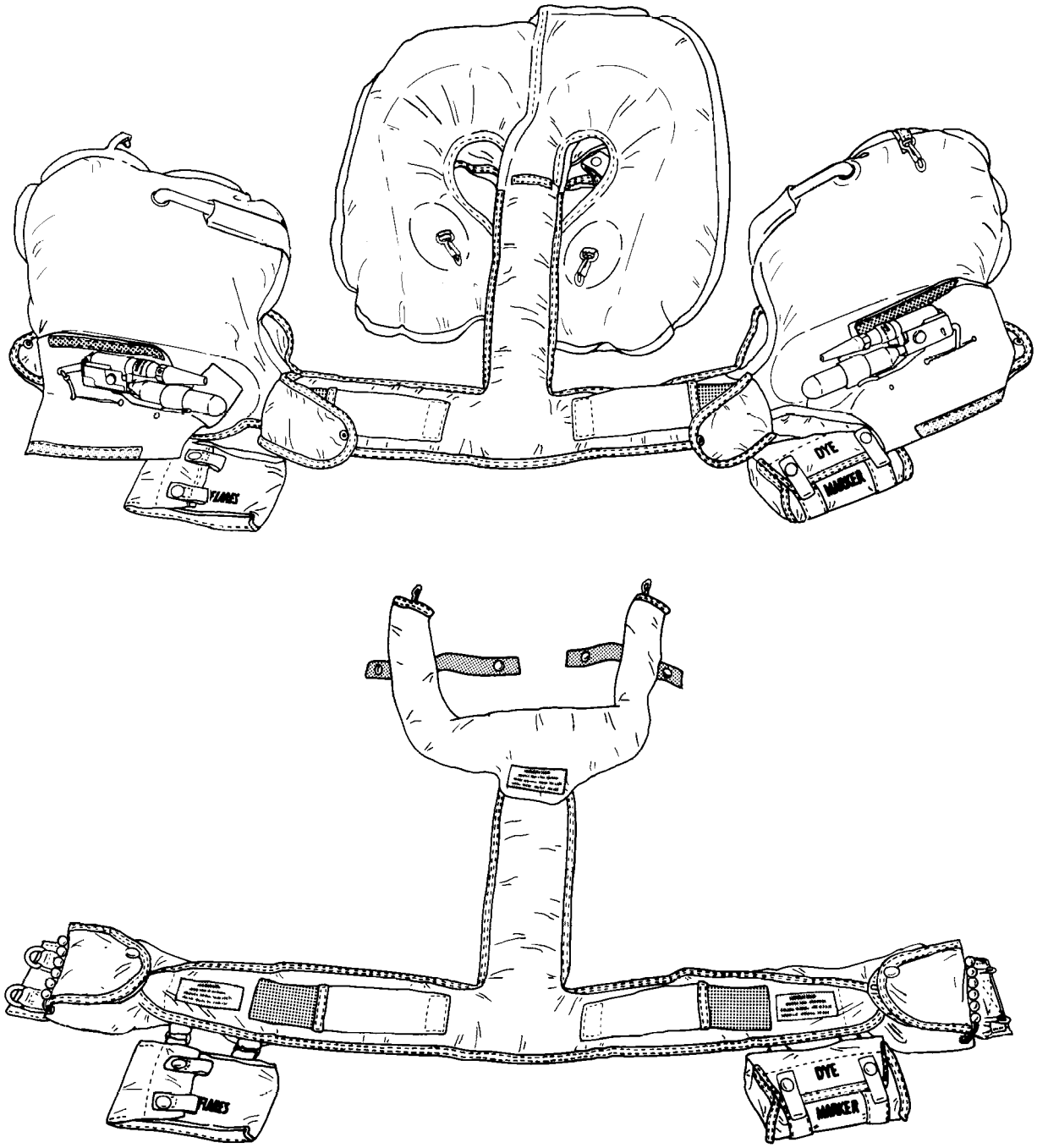

10180001

Figure 18-1. LPU-23C/P Life Preserver Assembly

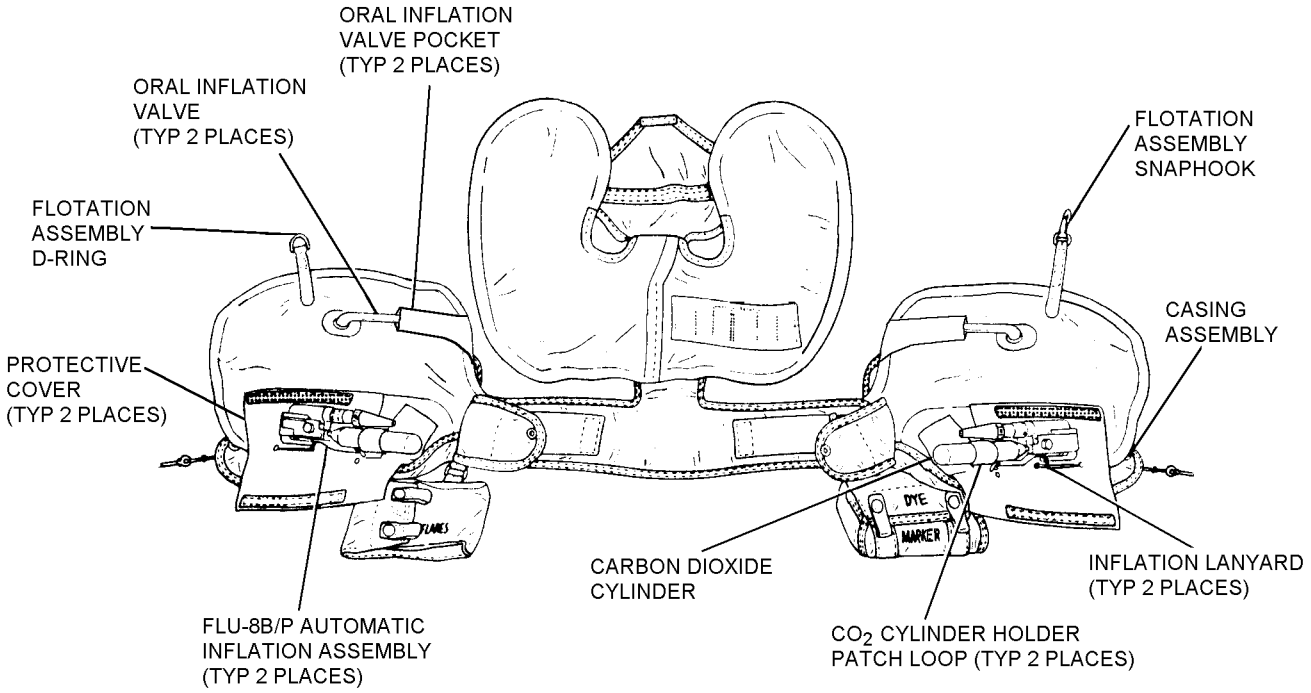

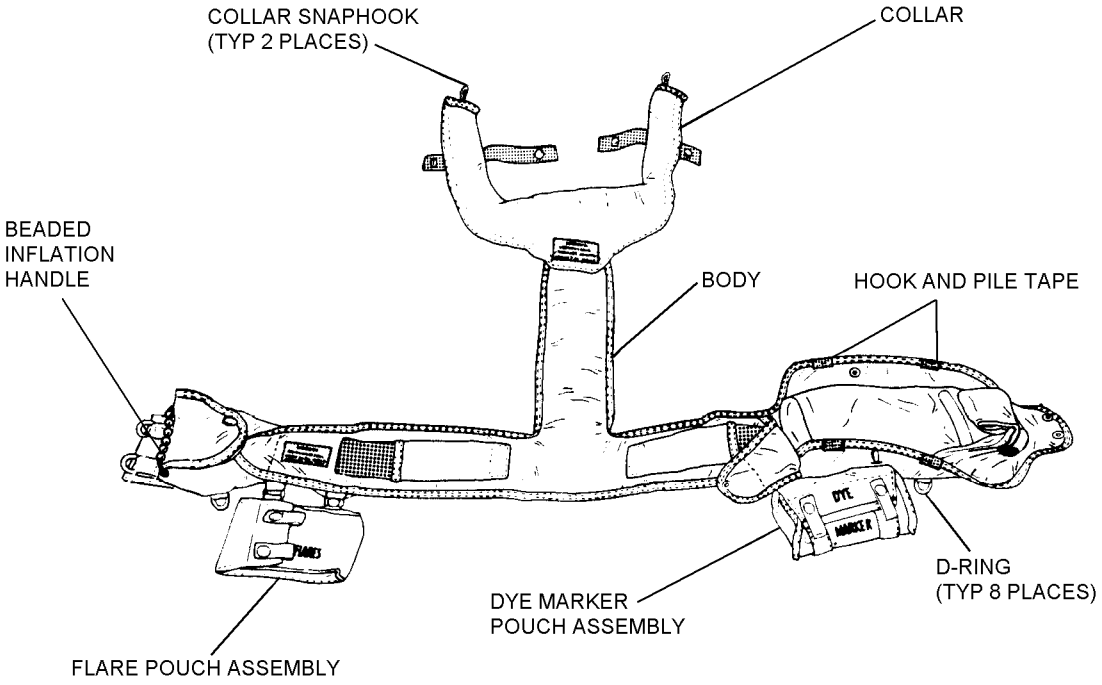

10180002

Figure 18-2. LPU-23C/P Life Preserver Assembly, Parts Nomenclature

NOTE

The designation FLU-8A/P has been left in this chapter, although all FLU-8A/P units should have been replaced with FLU-8B/P units. Any FLU-8A/P Automatic Inflator found in service during scheduled maintenance shall be replaced with a FLU-8B/P Automatic Inflator.

18-7. AUTOMATIC INFLATION DEVICE FLU-8B/P. The FLU-8B/P is a sealed, cartridge actuated automatic inflation device with manual inflation capability (figure 18-3). The device consists of a sensor housing and a body assembly into which a charged carbon dioxide (CO_2) cylinder, with an O-ring, is threaded. The sensor housing contains an electronic circuit which, when immersed in fresh or salt water, initiates automatic inflation of the LPU-23C/P life preserver. An inflation lanyard attached to the actuating lever and connected to the beaded inflation handle and nylon locking pin of the casing assembly, provides the manual inflation capability. (For more details on the FLU-8B/P, refer to NAVAIR 11-100-1.1.) The automatic inflation device is installed on the valve stem of each waist lobe of the flotation assembly. A cap nut secures the device and upper and lower pressure-seal gaskets on the valve stem and serves as a cap for the valve stem.

18-8. WAIST LOBE. Each waist lobe of the flotation assembly has an attached attachment patch in which six uni-directional snap fastener sockets are installed. These snap fastener sockets, when mated with six uni-directional snap fastener studs on the casing assembly, secure the waist lobes of the flotation assembly to the casing assembly. The right waist lobe is equipped with a snaphook which connects to a D-ring on the left waist lobe to secure the lobes together after inflation.

NOTE

The uni-directional snap fastener socket is installed with the dot on its button oriented to the side of the fastener on which lift is applied to disengage the socket from the snap fastener stud.

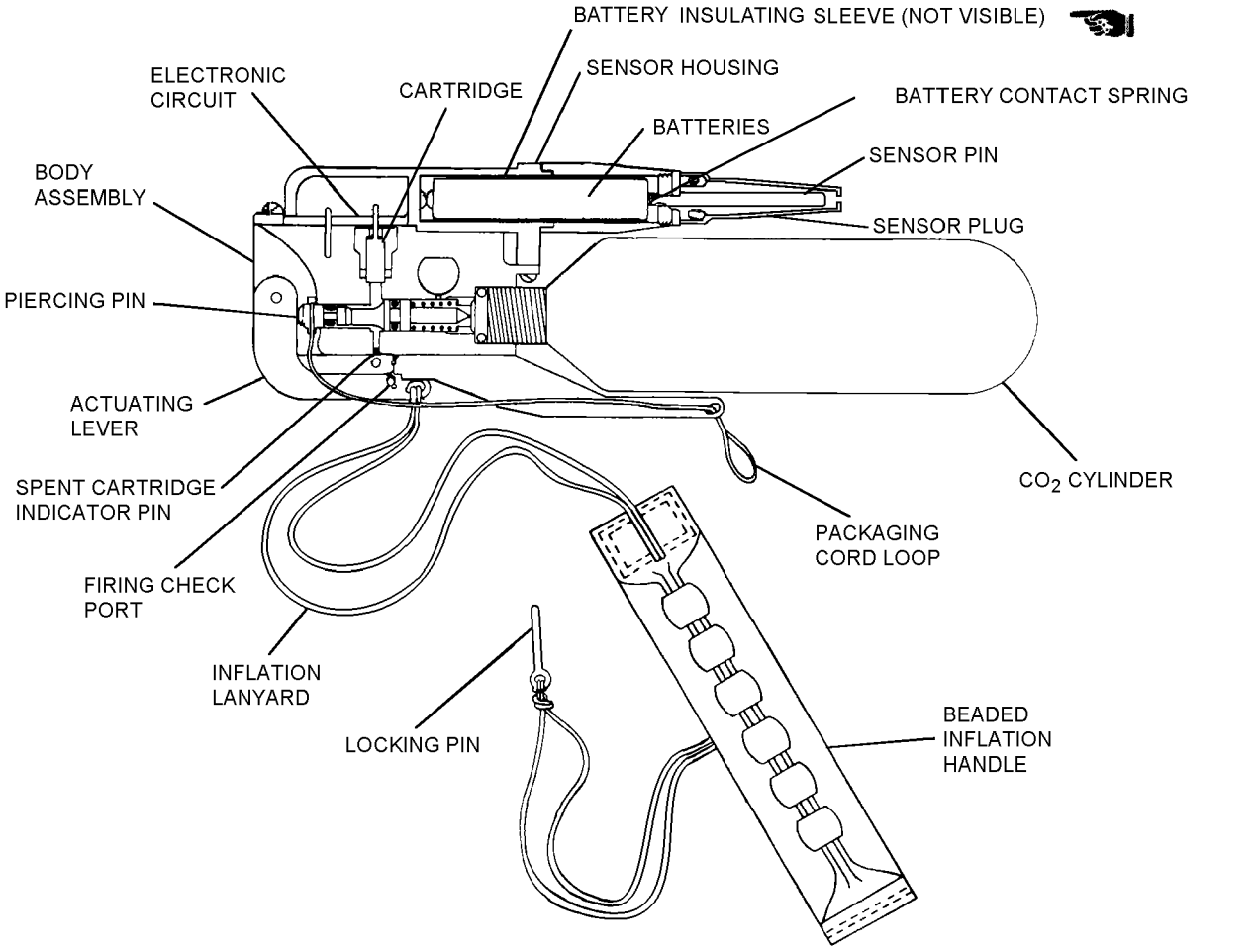

Figure 18-3. Automatic Inflation Device FLU-8B/P

18-9. COLLAR LOBE. Each collar lobe is equipped with a snaphook to attach the lobe to the D-ring of the survival vest. The inspection record patch of the life preserver is attached to the right collar lobe.

18-10. CASING ASSEMBLY. The casing assembly, which is fabricated from fire retardant aramid cloth, provides the flotation assembly with a protective cover. The assembly consists of the adjustable casing, belt keeper loops, snap fastener studs on the inside waist portion (which mate with snap fastener sockets on the waist lobes), and the front connector assembly.

18-11. Webbing belt keeper loops provide a means to attach the life preserver to the SV-2 survival vest or the integrated torso harness suit about the wearer's waist. Six D-rings on webbing belt keeper loops provide attach points for survival item pouches, life raft retaining line, and other accessories.

18-12. HOOK AND PILE TAPES. Hook and pile tapes, attached to the outside waist portion of the casing, are used for slack adjustment. In addition, hook and pile tapes attached about the periphery of the collar casing and the lower edge of the back portion of the casing are used to enclose the casing assembly about the flotation assembly.

18-13. APPLICATION.

18-14. The LPU-23C/P life preserver assembly is authorized for wear only by aircrew personnel wearing compatible flight clothing in high performance aircraft equipped with ejection seat systems.

18-15. FUNCTION.

18-16. The LPU-23C/P life preserver assembly is inflated either automatically (by immersion in fresh or salt water) or manually (by pulling both inflation assembly beaded handles).

18-17. The primary method of initiating inflation of the LPU-23C/P life preserver is the manual mode; pulling both beaded inflation handles. The beaded inflation handles provide the life preserver with a multidirectional capability for inflation initiation. The most effective and commonly used procedure is to pull both beaded inflation handles in a natural, slightly down and straight out direction from the body. Each beaded inflation handle is connected by lanyard to the actuating lever of the inflation assembly and the nylon locking pin of the casing assembly. When the beaded inflation handle is pulled, the locking pin is withdrawn from the outer packaging cord loop freeing the inboard and outboard casing flaps. Simultaneously, tension on the inflation lanyard moves the actuating lever to its actuated position. The rotary cam action of the hub of the actuating lever drives the piercing pin forward to puncture the diaphragm of the CO_2 cylinder. As the piercing pin is driven forward, the inner loop of the packaging cord is released from the inflator body. Carbon dioxide under pressure is released from the cylinder to inflate the life preserver. Hook and pile tapes which secure the casing assembly about the collar lobes separate as inflation occurs. After each activation in the manual mode, the CO_2 cylinder and O-ring must be replaced with a charged cylinder and new O-ring.

18-18. The FLU-8B/P Automatic Inflation Device serves as a backup inflation system for the LPU-23C/P life preserver. Automatic inflation occurs when immersion in fresh or salt water activates the electronic circuit in the sensor housing of the device (figure 18-3). The activated electronic circuit detonates an explosive primer (cartridge). Energy from the burning explosive forces the spent-cartridge indicator into the firing check port and simultaneously propels the piercing pin forward. As the piercing pin punctures the diaphragm of the CO_2 cylinder carbon dioxide under pressure is released to inflate the life preserver. During the forward movement of the piercing pin, the inner loop of the packaging cord is released from the body of the inflator. Hook and pile tape which secures the casing assembly about the collar lobes separate as inflation occurs.

18-19. Automatic inflation is a one-time function for the automatic inflation device (inflator). After each activation in the automatic mode, the inflator must be replaced with a new one.

NOTE

The FLU-8B/P automatic inflation device may be operated in the manual mode an unlimited number of times without affecting its one-time automatic feature.

18-20. In an emergency situation, the oral inflation valves may be used to top off the inflated preserver, maintain inflation of a leaky preserver, or inflate a chamber if an inflation assembly malfunctions. The oral inflation valves are also used to inflate a preserver with air during an inspection test or to evacuate a preserver in preparation for packing.

NOTE

The casing must be manually opened and the flotation assembly unfolded before the life preserver can be inflated using the oral inflation valve.

Table 18-1. LPU-23/P Series Survival Items

Description	Quantity Required	Reference Number	NIIN	SM&R Code
Dye Marker (Note 1)	2	MIL-S-17980	00-210-9986	PAOZZ
Signal, Smoke and Illumination, Marine MK-124 MOD 0 (Note 1)	2	—	01-030-8330	PA--Z
Notes: 1. Optional equipment at the discretion of the Squadron Commander.				

Section 18-2. Modifications

18-21. GENERAL.

18-22. There are no authorized modifications to the LPU-23C/P life preservers at this time. Common repairs and fabrication instructions to maintain serviceability are listed in table 18-2.

Table 18-2. LPU-23C/P Common Repairs and Fabrications

Description of Repair or Fabrication	Paragraph Number
Determination of Repairability	18-60
Casing Repair Procedures	18-61
Casing Grommet Replacement Procedures	18-62
Cementing Life Preservers	18-63
Patching Life Preservers	18-64
Replacement of Oral Inflation Valve	18-66
Recementing of Bladder Fin Seams	18-67
Fabrication of Slip-On Pockets For Life Preserver Hardware	18-70
Replacement of Flare and Dye Marker Pouch Snaphooks	18-71
Replacement of Collar Lobe Snaphooks	18-72
Flare Pouch Repair	18-73
Disassembly of the Life Preserver	18-74
Reassembly of Life Preserver	18-75
Replacement of Beaded Inflation Handle Assembly	18-76
Replacement of FLU-8B/P Automatic Inflator Assembly	18-77
Replacement of Packaging Cord Loop, FLU-8B/P	18-78
Replacement of Sensor Plug Cap Assembly, FLU-8B/P	18-79
Replacement of Top and Bottom Gaskets	18-80
Replacement of Check Valve Assembly	18-81
Fabrication of Protective Cover Assembly	18-82
Fabrication of Collar Lobe Webbing Loops	18-83
Fabrication and Installation of Waist Lobe Attachment Patch	18-84
Attachment Patch	18-85
Installation of Casing Attachment Patch Snap Fastener Studs	18-86
Fabrication and Installation of Locking Pin Cover (Life Preservers without No. 3 Spur)	18-87

Section 18-3. Maintenance

18-23. GENERAL.

18-24. This section contains information on inspection, disassembly, repair/replacement, testing, and reassembly of the LRU-23C/P life preserver.

18-25. INSPECTION.

18-26. All life preservers shall be subjected to Preflight, Special and Calendar/Phase Inspections.

18-27. The Preflight Inspection shall be performed on life preservers prior to each flight by the aircrewmember to whom the life preserver is assigned. The Preflight Inspection shall be performed on life preservers installed in aircraft prior to each flight by assigned aircrewmembers.

18-28. The Special Inspection shall be performed on all aircraft installed life preservers at intervals not to exceed 30 days. The inspection shall be performed at the organizational level of maintenance by personnel assigned to the Aviator's Equipment Branch.

18-29. Upon completion of the inspection, make necessary entries on the appropriate form in accordance with 4790.2 Series. The 30-Day Special Inspection may be recorded on a separate history card from the history card recording Calendar/Phase Inspections, functional checks, and modifications.

18-30. The Calendar/Phase Inspection shall be performed on all life preservers prior to placing in service. The Inspection cycle thereafter shall be as follows: personal issue life preservers shall be inspected once every 90 days. Aircraft-installed life preserver inspection shall coincide with the inspection cycle of the aircraft in which installed. See applicable Planned Maintenance System (PMS) publications for specific intervals. In no case shall the interval exceed 231 days. Unless operational requirements demand otherwise, the life preserver Calendar/Phase Inspection shall be performed by the intermediate level of maintenance or above. The functional test shall be performed prior to placing in service, every fourth inspection cycle thereafter, and whenever an inflation assembly is replaced. The leakage test shall be performed during every inspection cycle. The battery visual inspection for the LPU-23C/P will be performed prior to placing life preservers in service. If inspection indicates damage, complete appropriate forms in accordance with OPNAVINST 4790.2 Series and forward entire assembly to supply. Refer to paragraph 18-60 for determination of repairability.

18-31. QUALITY ASSURANCE. Properly detailed procedures present a logical sequence for the inspection process. The more critical procedures are underlined to designate steps which require a Quality Assurance inspection to assure performance of specific requirements. After the underlined step is performed by the Aircrew Survival Equipmentman, the procedure shall be verified before the next step is performed. This verification shall be performed by a Collateral Duty Inspector or Quality Assurance Representative (CDI, CDQAR, or QAR). Work Center supervisors are primarily responsible for quality assurance within their centers. OPNAVINST 4790.2 Series permits supervisors to nominate their more experienced personnel to serve as quality assurance inspectors. Nominated personnel shall be screened and examined by the Quality Assurance Officer prior to their designation as Quality Assurance Inspectors or Quality Assurance Representatives by the Commanding Officer. Under no circumstances shall an Aircrew Survival Equipmentman perform his own quality assurance inspection.

18-32. PREFLIGHT/SPECIAL INSPECTION. To perform a Preflight/Special Inspection, proceed as follows:

WARNING

Ensure that the beaded inflation handles are readily accessible. Beaded inflation handles shall be secured with four snap fasteners to the life preserver end flap.

CAUTION

Do not open any sealed or safety-wired/safety tied portions of preserver for Preflight/Special Inspection.

1. Inspect exposed metal parts for corrosion and damage.

2. Inspect for presence, security of attachment and, if applicable, operation of survival items.

3. Inspect casing fabric for cuts, tears, abrasions, security of stitching, and other damage.

4. Check warning label for secure attachment to life preserver fabric.

5. Ensure beaded inflation handles are secured to snap fasteners. Inspect safety ties on beaded inflation handles. The beaded inflation handle safety ties may be replaced without removing the life preserver from service.

6. Inspect safety ties on locking pins.

7. Inspect uni-directional snap fasteners securing flotation assembly to casing assembly for presence, security of attachment, corrosion, and ease of operation.

8. Inspect hook and pile tape closure at collar for separation; fasten as necessary.

9. Adjust and don preserver to ensure proper fit.

10. If any discrepancy is noted, the preserver shall be removed from service and repaired in accordance with procedures in this volume.

18-33. ACCEPTANCE/CALENDAR/PHASE INSPECTION. The Acceptance/Calendar/Phase Inspection consists of the following tasks:

1. Beaded Inflation Handle Inspection

2. Case, Container/Pouch Inspection

3. Functional Test (every fourth inspection cycle)

4. Visual Inspection

5. Life Preserver Configuration

6. General Inspection

7. Battery Visual Inspection (every fourth inspection cycle)

8. Battery Voltage Testing (once every 90 days)

9. Markings Inspection

10. Survival Items Inspection

11. Inflation Assembly Inspection

12. Beaded Inflation Handle Pull Test

13. Leakage Test

14. Records Updating

15. Repacking

18-34. BEADED INFLATION HANDLE INSPECTION. Inspect beaded inflation handle for the following:

1. Attachment of inflation lanyard to beaded handle.

2. Attachment of locking pin lanyard to beaded handle. Overhand knot on locking pin lanyard shall be within 3/4 inch from eye of pin.

3. Corrosion on snap fasteners and ease of operation.

4. Cuts, tears, deterioration, abrasion, stains, and general cleanliness of fabric.

5. Presence of safety tie on beaded inflation handle.

18-35. CASE, CONTAINER/POUCH INSPECTION. To inspect cases, containers, and/or pouches, proceed as follows:

1. Inspect fabric for cuts, tears, deterioration, abrasion, stains, and general cleanliness.

2. Inspect seams for proper adhesion or stitching.

3. Inspect straps and loops for security and wear.

4. Inspect any other parts for wear, damage, and security.

NOTE

Life preservers missing the D-rings used to attach dye marker and flare pouches shall be considered serviceable provided the aircrewmember to whom it is issued does not desire to utilize the pouches.

5. All hardware for security of attachment, corrosion, damage, wear and, if applicable, ease of operation.

6. Inspect uni-directional snap fastener assemblies for presence, security of attachment, proper orientation, ease of operation, corrosion, and wear.

NOTE

All uni-directional snap fasteners shall be installed with the dot on the button of the snap fastener socket positioned on the side of the snap fastener to which lift must be applied to disengage the socket from the snap fastener stud.

All snap fasteners on the attachment patch of each flotation lobe shall be installed with the dot on each socket button positioned nearest to, and pointing toward, the center point of the attachment patch.

7. If any discrepancies are found, the case, container, or pouch shall be repaired or removed from service as deemed appropriate by the inspection activity.

18-36. FUNCTIONAL TEST. To perform a functional test, proceed as follows:

CAUTION

Ensure area surrounding preserver is free of foreign objects.

1. Completely open preserver casing prior to conducting functional test. Both release pins shall be removed from their respective loops, the collar hook and pile tape fasteners shall be separated, and the waist and collar lobes shall be completely unfolded and laid out flat.

CAUTION

The functional test for the LPU-23C/P series life preservers will be performed manually. Automatic actuation of the FLU-8B/P automatic inflator is a one-time function. A new FLU-8B/P inflator shall be installed on the life preserver to replace a previously spent one. The FLU-8B/P inflators can be operated manually an unlimited number of times, however, after each manual operation a new O-ring and CO_2 cylinder must be installed. Refer to paragraph 18-55.

2. Actuate inflation assemblies.

3. The preserver shall fully inflate to design shape, without evidence of restriction, in less than 30 seconds.

4. If preserver does not properly inflate, determine cause. Ensure stem and valve are clean and free of foreign matter.

5. If correction is made, the preserver shall be functionally tested again.

6. Deflate preserver in accordance with paragraph 18-37 to remove all CO_2.

18-37. DEFLATION. To deflate a life preserver, proceed as follows:

Support Equipment Required

Quantity	Description	Reference Number
1	Pump, Rotary Vacuum (or equivalent)	NIIN 00-052-5015 (90567)
As Required	Hose, 3/8- or 1/2-inch, inside Diameter, Rubber	—

1. Attach one end of rubber hose to vacuum pump.

2. Deflate through oral inflation valves. Unlock oral inflation valve, hold in open position, and hold vacuum pump hose against end of oral inflation valve. When compartment is collapsed, release oral inflation valve. Screw lock closed.

18-38. VISUAL INSPECTION. Prior to visually inspecting a life preserver assembly, the life preserver shall be inflated with air to 1.0 psig.

CAUTION

Remove all carbon dioxide cylinders prior to inflating life preserver with air.

NOTE

If suitable air source is not available, water-pumped nitrogen (FED SPEC BB-N-411) may be substituted.

18-39. LIFE PRESERVER CONFIGURATION. The life preserver shall be updated by comparing it to figures 18-1 and 18-2, and Section 18-4.

18-40. GENERAL INSPECTION. Examine life preservers for the following:

1. Preserver fabric for cuts, tears, punctures, deterioration and abrasion. Refer to paragraph 18-61 for repair instructions.

2. Seam tapes for proper adhesion. Refer to paragraph 18-67 for repair instructions.

3. Valve inlet stems for security.

4. Check that silver indicator is not visible in firing check port. If the silver indicator is visible, the inflator is spent and the automatic feature of the inflator is negated. A new inflator shall be installed on the life preserver to replace the previously spent inflator. Refer to paragraph 18-77.

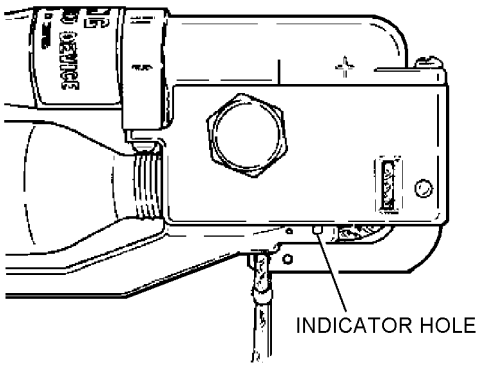

R0040004

Step 4 - Para 18-40

NOTE

For data on total life of the FLU-8B/P automatic inflation assembly, refer to NAVAIR 11-100-1.1. If total life expiration date occurs before date of next scheduled calendar inspection, replace inflator assembly. The manganese dioxide batteries used in the assembly have a total life of 3 years from the date of manufacture.

5. Check records (OPNAVINST 4790.2 Series) for date of installation of each FLU-8B/P automatic inflator. For date of manufacture, refer to the manufacturer's identification plate of each FLU-8B/P inflator. See figure 18-4 for lot numbering system.

6. Oral inflation valve(s) for cracks, security, ease of operation, and corrosion.

7. Patches for proper adhesion and wear. Refer to paragraph 18-64 for repair instructions.

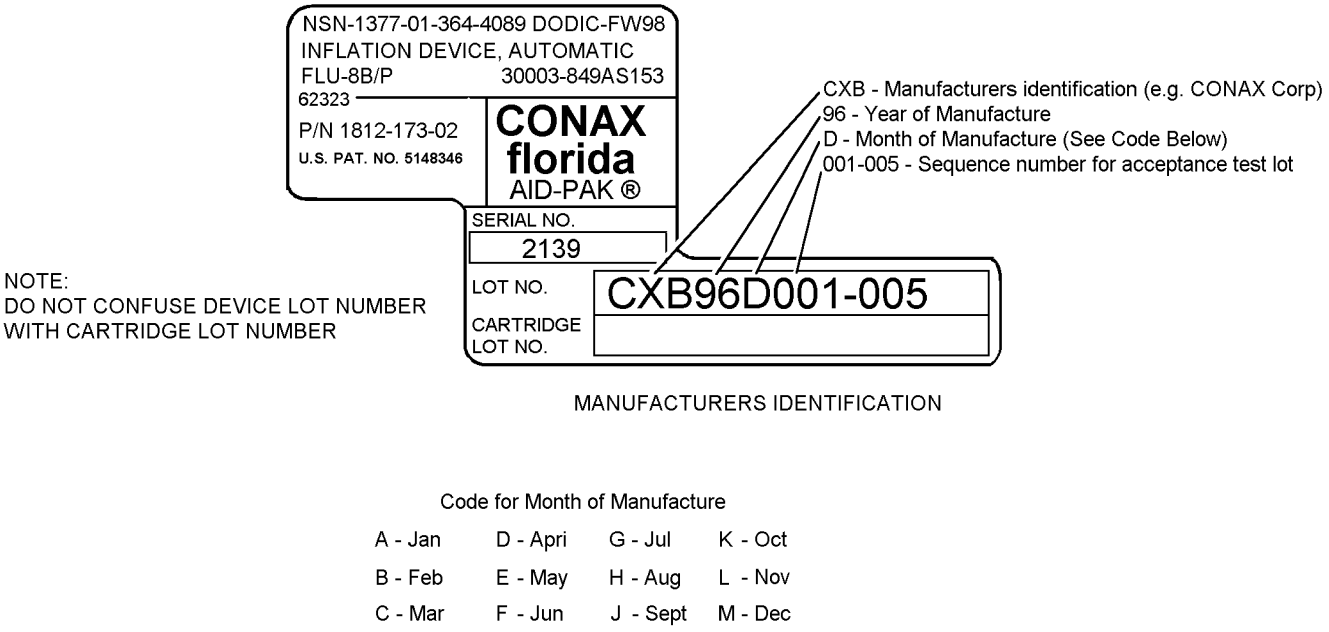

10180004

Figure 18-4. Lot Numbering System for FLU-8B/P Automatic Inflators

8. Any other parts for wear or other damage.

9. All hardware for security of attachment, corrosion, damage, wear and, if applicable, ease of operation.

10. Preservers for stains, dirt, and general cleanliness. Refer to paragraph 18-51 for cleaning instructions.

11. Cross threading and/or loose manifold nuts.

18-41. BATTERY VISUAL INSPECTION. To inspect the batteries installed in the FLU-8B/P inflator, proceed as follows:

Support Equipment Required

Quantity	Description	Reference Number
1	Multimeter (Digital)	8600A or equivalent (CAGE 89536) NIIN 01-010-0088
1	Wrench, 3/4-Inch	—

WARNING

No object should be inserted into sensor plug side ports for any reason.

1. Remove sensor plug cap using a standard 3/4-inch wrench. See figure 18-5.

2. Remove batteries and check for the following: leakage, corrosion, dents, depressions and cracks. If found the batteries shall be rejected.

2A. Inspect end of battery insulating sleeve that protrudes from battery compartment for cracks/tears. Replace battery insulating sleeves that have cracks and tears that continue into the battery compartment. Small defects that do not travel into the wall of the battery compartment are acceptable.

3. Check sensor plug cap for cracks.

NOTE

The total service life for the manganese dioxide battery (FW14) is three years from date of manufacture. For date coding information on the FW14 battery, refer to NAVAIR 11-100-1.1. Replace both batteries if life of either battery expires prior to the next calendar inspection.

4. Check date of manufacture stamped on the battery. Also check date of installation recorded in records (refer to OPNAVINST 4790.2 Series).

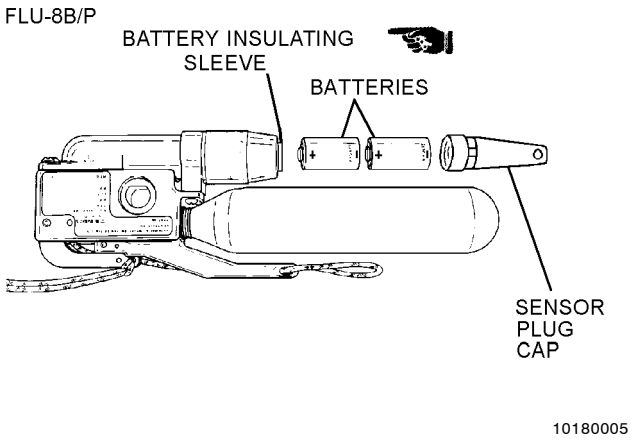

Figure 18-5. Battery Removal

4A. Using multimeter set-up to measure dc voltage, check each battery for shorted casing. Place one lead on the positive terminal and the other on the battery case. If a voltage reading of 0.1 volts dc or higher is obtained, reject the battery for use and discard battery in an appropriate manner.

5. Reinstall or replace batteries if needed. Torque FLU-8B/P sensor plug cap to 15 lb-in using 3/4-inch socket and torque wrench. Ensure that date of installation and date of manufacture are recorded on appropriate form in accordance with OPNAVINST 4790.2 Series. See figure 18-5 for proper battery arrangement and refer to paragraph 18-56 for battery replacement.

18-42. BATTERY VOLTAGE TESTING. To test batteries, proceed as follows:

CAUTION

Do not use analog (needle) voltage multimeter. Use digital reading voltage multimeter.

Support Equipment Required

Quantity	Description	Reference Number
1	Multimeter (Digital)	8600A or equivalent (CAGE 89536) NIIN 01-010-0088

WARNING

Ensure that the multimeter is set in the voltage measuring mode and NOT the resistance measuring mode as a resistance measurement will trigger the squib and fire the inflator. The inflator will also fire with any conductive material making contact from the sensor pin to any conductive surface of the inflator device.

Do not touch the inflator with your bare hands or any conductive material while performing this test. Faulty readings may be obtained, or the squib may be fired if the body becomes an electrical pathway between the sensor pin and any conductive part of the inflator assembly.

NOTE

Provide the positive (+) test lead with a standard test probe (1/16-inch size) on a standard handle (3-4-inch nominal length). Provide the negative (-) test lead with a banana type-test plug (1/8-inch size) on a short handle (one-inch nominal length). Adjust the tension on the ribs of the banana plug so that when inserted into a sensor plug end port (7/16-inch nominal depth) the weight of the test lead will not withdraw the plug. (Use an undamaged uninstalled sensor plug for verification, not an inflator with batteries installed).

1. Insert the negative (-) test probe into the end port of the sensor plug. Remove hand. Using the pointed positive (+) probe, touch and maintain contact with one of the screw heads near the lever-end of the inflator.

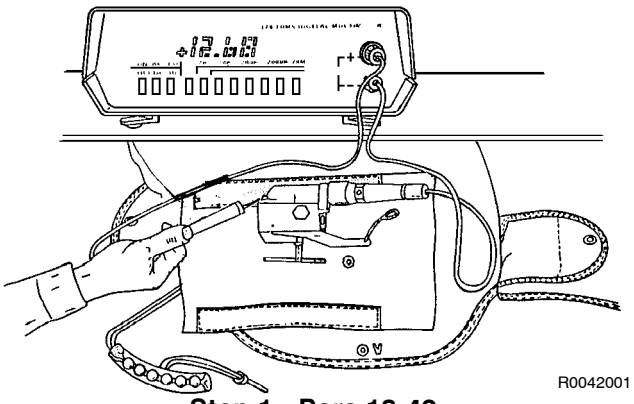

Step 1 - Para 18-42

2. Wait 15 seconds for the FLU-8B/P circuits to stabilize after connecting the test leads before taking the voltage reading.

WARNING

The voltage reading should begin at a high value and then gradually shift downward (0.15 volts typical) before final stabilization. If no downward shift in meter reading occurs, or if the shift continues steadily downward more than 1.0 volt during battery test, the FLU-8B/P inflator shall be rejected.

CAUTION

Never replace one battery. Always replace the pair.

3. Interpret battery test readings and respond as indicated below:

a. A reading of +12 volts or more indicates that the batteries are at full power and correctly installed.

b. A reading of -12 volts or more indicates that both batteries are installed backwards. Batteries must be reversed.

c. A reading of zero volts indicates one battery is inserted backwards, battery contact is faulty or batteries are not installed. Inspect and correct.

d. If a correct battery voltage reading cannot be obtained with batteries of verified full charge properly installed, the inflator is defective. Reject and report for engineering investigation according to OPNAVINST 4790.2 Series.

NOTE

The same multimeter and test leads may be used to test batteries singly or in pairs external to the inflator. Voltage readings will be slightly higher and will not drift downward when testing outside the inflator.

4. If batteries need to be rearranged or replaced, refer to paragraph 18-56.

5. After replacing or rearranging batteries, repeat steps 1 and 2.

18-43. MARKINGS INSPECTION. To inspect and restore marking, proceed as follows:

Materials Required

Quantity	Description	Reference Number
As Required	Ink, Marking, Laundry, Black	SPE-92 NIIN 00-161-4229
	-or-	
As Required	Ink, Drawing, Waterproof, Yellow	A-A-59291 NIIN 00-634-6583

1. Compare markings on preserver to those listed in table 18-3.

2. Restore any faded markings.

3. Deleted.

4. Correct any markings which do not agree with the applicable table. Paint out old marking and enter new marking as close to proper position as possible.

18-44. SURVIVAL ITEMS INSPECTION. To inspect survival items, proceed as follows:

1. Inventory all items by checking items against table 18-1. Replace any missing or unsatisfactory item.

NOTE

NAVAIR 13-1-6.5, Rescue and Survival Equipment contains detailed information on the inspection of survival items.

2. Inspect all items for damage, spent contents and expired service life. Replace as necessary.

3. Operate all items which are not intended for one-time use. Replace as necessary.

18-45. INFLATION ASSEMBLY INSPECTION. To inspect life preserver inflation assemblies, proceed as follows:

1. Remove CO_2 cylinder locking screws, if present, and remove CO_2 cylinders from valve assembly.

2. Examine inflation device, actuating lever and lanyard, and locking pins for fraying, corrosion, stripped threads, and other damage.

3. If required, remove any sharp edges from valve with a fine round file.

4. Operate actuating lever several times. Ensure that lever moves freely and ensure that piercing pin moves properly inside valve body. Inspect point of piercing pin for serviceability. If point is flat, rounded, dull, or otherwise worn or damaged, replace inflation assembly.

5. Ensure that packaging cord loop is not pinched between piercing pin and actuating lever. If there is free play in the actuating lever when it is in its cocked position, the packaging cord loop is pinched. If necessary, reinstall in accordance with paragraph 18-78.

NOTE

Each time inflation assembly gaskets or inflation assembly is removed and replaced for any reason, a functional test shall be conducted. Refer to paragraph 18-36. Use new gaskets when replacing device.

6. If any discrepancy is noted in device that is not repairable in accordance with paragraph 18-77, remove assembly and install a new inflation device.

7. If CO_2 cylinder locking screws are installed, remove them.

Table 18-3. LPU-23C/P Life Preserver Markings

Marking (Note 1)	Location	Letter Height
CASING, LIFE PRESERVER, LPU-23B(V)1/P 1957AS104-2 CONTRACT NO. [applicable number] MANUFACTURER [applicable number] DATE OF MANUFACTURE [month and year] SERIAL NO. [applicable number]	Center of casing waist section (inside)	5/16 inch 3/16 inch
DYE MARKER	Pouch (right side)	1/2 inch
FLARES	Pouch (left side)	1/2 inch
CASING, LIFE PRESERVER, LPU-23C/P 1957AS103-1 CONTRACT NO. [applicable number] MANUFACTURER [name of manufacturer] DATE OF MANUFACTURE [month and year] SERIAL NO. [applicable number]	Center of casing waist section (inside)	5/16 inch 3/16 inch 1/4 (Any readable size acceptable)
LIFE PRESERVER INFLATABLE, AUTOMATIC LPU-23A/P PART NO. 68A73H1-102 **WARNING** AUTOMATIC INFLATION DEVICE INSTALLED FOR USE IN EJECTION SEAT AIRCRAFT ONLY	Center of casing waist section (inside)	3/16 inch 1/4 inch 3/16 inch
LIFE PRESERVER INFLATABLE, AUTOMATIC LPU-23B/P PART NO. 68A73H1-104 AND LPU-23C/P PART NO. 1957AS103-1 **WARNING** AUTOMATIC INFLATION DEVICE INSTALLED FOR USE IN EJECTION SEAT AIRCRAFT ONLY	Center of casing waist section (inside)	3/16 inch 1/4 inch 3/16 inch

Table 18-3. LPU-23C/P Life Preserver Markings (Cont)

Marking (Note 1)	Location	Letter Height
WARNING AUTOMATIC INFLATION DEVICE INSTALLED FOR USE IN EJECTION SEAT AIRCRAFT ONLY	Right and Left side of waist casing (outside) collar lobe casing (outside)	1/4 inch 3/16 inch
Notes: 1. Replacement markings shall be stamped or stenciled using waterproof black ink.		

18-46. BEADED INFLATION HANDLE PULL TEST. To perform the beaded inflation handle pull test, proceed as follows:

Support Equipment Required

Quantity	Description	Reference Number
1	Gage, Dial, Push/Pull, 0 to 50 lb	DPPH50 (CAGE 11710) or equivalent NIIN 00-473-0108

1. Ensure that CO_2 cylinders have been removed. Actuate the inflator assembly. All snap fasteners on beaded inflation handle must be fully engaged.

2. Attach gage to webbing between third and fourth bead on inflation handle.

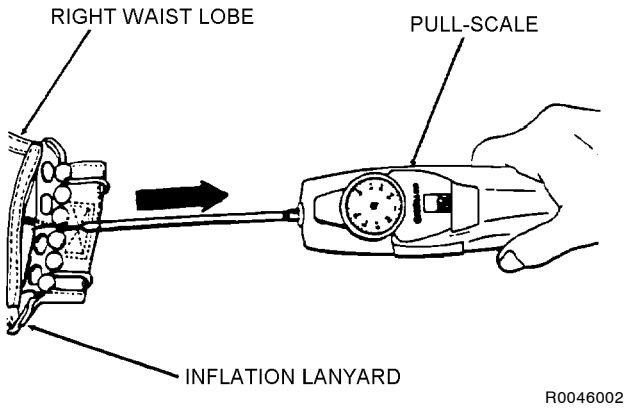

Step 2 - Para 18-46

3. Hold inflator steady. Slowly exert a 25-pound straight pull on webbing. All snap fasteners should release at or before 25 pounds.

4. If all snap fasteners do not release at or before the 25 pound limit, inspect male and female snap fasteners for damage. Replace the entire beaded inflation handle if required and repeat steps 1 through 4.

5. If all the snap fasteners release properly, leave the pull scale attached, add an additional 25 pound force to check the security of the beaded inflation handle attachment to the inflation lanyard. Examine the lanyard for frays, ruptures, thin spots, split casing, and security of knots. If unsatisfactory, replace entire beaded inflation handle. Refer to paragraph 18-76.

6. Ensure that packaging cord loop is not pinched between piercing pin and actuating lever. If there is free play in the actuating lever when it is in its cocked position, the packaging cord loop is pinched. If necessary, reinstall in accordance with paragraph 18-78.

18-47. LEAKAGE TEST. All life preservers shall be subjected to a leakage test each Calendar/Phase Inspection. To perform a leakage test proceed in accordance with paragraph 18-49.

18-48. Test Fixture. A suggested test fixture, consisting of a three-way valve, pressure gage, and adapters for compartments being tested, is shown in Chapter 3. Fixtures must be fabricated to meet the requirements of the schematic shown in figure 18-6.

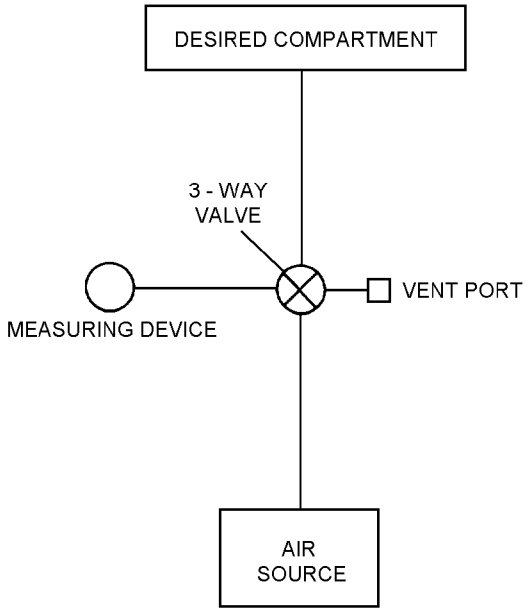

10180006

Figure 18-6. Test Fixture Schematic

18-49. Test Procedure. To test life preservers, proceed as follows:

Support Equipment Required

Quantity	Description	Reference Number
1	Test Fixture (or equivalent)	See Chapter 3

CAUTION

Ensure test area is free of foreign objects.

1. Ensure all carbon dioxide has been removed from any preserver which has been functionally tested.

CAUTION

If 3-way valve is not used, measuring device valve must be closed when air feed valve is open.

Damage may occur to oral inflation valve if air supply pressure entering the life preserver exceeds ten (10) psi during this test.

NOTE

If a suitable air source is not available, water-pumped nitrogen (BB-N-411) may be substituted.

2. Unlock oral inflation valve and insert into rubber hose. Rotate valve to air supply position and inflate chamber. Alternately position valve between measuring device, vent and air supply until proper pressure of 2.0 psig is attained in both chambers.

3. The air supply shall be securely shut off and after a minimum of 15 minutes, the pressures shall be readjusted, if necessary, to the leakage test pressures. Record time.

4. Disconnect air supply and check for leaks. Ensure all valves are closed.

5. Record temperature and barometric pressure.

6. After a minimum of 4 hours after completing step 3, record test pressure of both chambers. Test pressure shall not decrease to less than 1.6 psig for a life preserver chamber, from a maximum test pressure of 2.0 psig.

7. Record temperature and barometric pressure and correct test pressure for any changes in temperature and barometric pressure. Refer to tables 18-4 and 18-5.

EXAMPLE

UNCORRECTED TEST READING 1.70 PSI

	TEMP.	BARO.
START	75° F	29.90 IN. Hg
END	70° F	29.70 IN. Hg
DIFFERENCE	- 5° F	-0.20
CORRECTION	+0.155	-0.098

TEMP. CORRECTION	+ 0.155
+ BARO. CORRECTION	- 0.098
CORRECTION	+ 0.057

UNCORRECTED READING	1.700 PSI
+ CORRECTION	+ 0.057
CORRECTED READING	1.757 PSI

R0049007

Step 7 - Para 18-49

Table 18-4. Temperature Conversion Chart

Temperature Difference (°F)	Correction (psi)
1	0.031
2	0.062
3	0.093
4	0.124
5	0.155
6	0.186
7	0.217
8	0.248
9	0.279
10	0.310
Rise in temperature: subtract from gage reading. Fall in temperature: add to gage reading.	

CAUTION

Do not submerge LPU-23C/P life preservers in water to check for leaks.

8. If pressure of chamber is below 1.6 psig inflate to leakage test pressure and coat with a soap solution to locate leaks. Mark leak areas. Rinse preserver with fresh water, air dry and repair in accordance with paragraph 18-64.

9. Deflate preserver in accordance with paragraph 18-37.

10. Ensure that inflation valve lever is cocked. Install CO_2 cylinder in accordance with paragraph 18-55.

18-50. RECORDS UPDATING. Make necessary entries on appropriate form in accordance with OPNAVINST 4790.2 Series.

18-51. CLEANING AND SERVICING.

18-52. Cleaning and servicing consist of cleaning the life preserver, case, container and/or pouch, installation of the inflation valve protective covers and CO_2 cylinders and, when required, safety wiring of the inflation valve actuating lever.

18-53. CLEANING OF LIFE PRESERVER CASINGS/BLADDERS. To clean life preservers, machine washing is preferred on casings, containers, and pouches. Alternate method is by hand. Remove any survival items and other detachable items and proceed as follows:

Table 18-5. Barometric Pressure Conversion Chart

Press. Diff. (inHG)	Corr. (psi)	Press. Diff. (inHG)	Corr. (psi)	Press. Diff. (inHG)	Corr. (psi)	Press. Diff. (inHG)	Corr. (psi)	Press. Diff. (inHG)	Corr. (psi)
0.01	0.005	0.16	0.078	0.31	0.152	0.46	0.225	0.61	0.299
0.02	0.010	0.17	0.083	0.32	0.157	0.47	0.230	0.62	0.304
0.03	0.015	0.18	0.088	0.33	0.162	0.48	0.235	0.63	0.309
0.04	0.020	0.19	0.093	0.34	0.167	0.49	0.240	0.64	0.314
0.05	0.025	0.20	0.098	0.35	0.172	0.50	0.245	0.65	0.319
0.06	0.030	0.21	0.103	0.36	0.176	0.51	0.250	0.66	0.323
0.07	0.035	0.22	0.108	0.37	0.181	0.52	0.254	0.67	0.328
0.08	0.040	0.23	0.113	0.38	0.186	0.53	0.260	0.68	0.333
0.09	0.045	0.24	0.118	0.39	0.191	0.54	0.265	0.69	0.338
0.10	0.049	0.25	0.123	0.40	0.196	0.55	0.270	0.70	0.343
0.11	0.054	0.26	0.127	0.41	0.201	0.56	0.275	0.71	0.348
0.12	0.060	0.27	0.132	0.42	0.206	0.57	0.279	0.72	0.353
0.13	0.064	0.28	0.137	0.43	0.211	0.58	0.284	0.73	0.358
0.14	0.069	0.29	0.142	0.44	0.216	0.59	0.289	0.74	0.363
0.15	0.073	0.30	0.147	0.45	0.221	0.60	0.294	0.75	0.368

Rise in pressure: add to gage reading.
Fall in pressure: subtract from gage reading.

Materials Required

Quantity	Description	Reference Number
As Required	Detergent, General Purpose	MIL-D-16791 NIIN 00-282-9699
As Required	Cloth, Lint-Free Type II	MIL-C-85043 NIIN 00-044-9281
As Required	Talc, Technical	MIL-T-50036A NIIN 01-080-9589

CAUTION

Solvents are not to be used in cleaning life preservers.

1. Prepare solution of detergent (MIL-D-16791) consisting of 1/4 to 1/2 ounce of detergent per gallon of water.

2. Apply cleaning solution to soiled area with a spray or sponge.

3. Allow solution to remain on surface for several minutes, then agitate with a soft brush or rag.

4. Rinse surface thoroughly with water; wipe with a cloth or sponge. Repeat this application until surface is free from all solution.

5. Dry casing before use and dry bladder with a lint-free cloth (MIL-C-85043). Apply a light coating of talc (MIL-T-50036A).

18-54. INSTALLATION OF INFLATION VALVE PROTECTIVE COVERS. To install inflation valve protective covers, proceed as follows:

1. Open life preserver flotation assembly, then position on a flat surface.

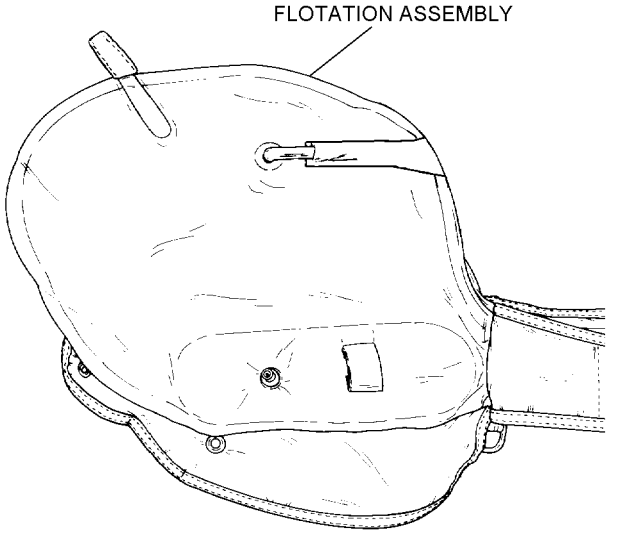

Step 1 - Para 18-54

2. Place inflation valve protective cover upon the life preserver. Ensure that inlet manifold stem hole and CO_2 cylinder holding loop hole are aligned according to figure 18-7.

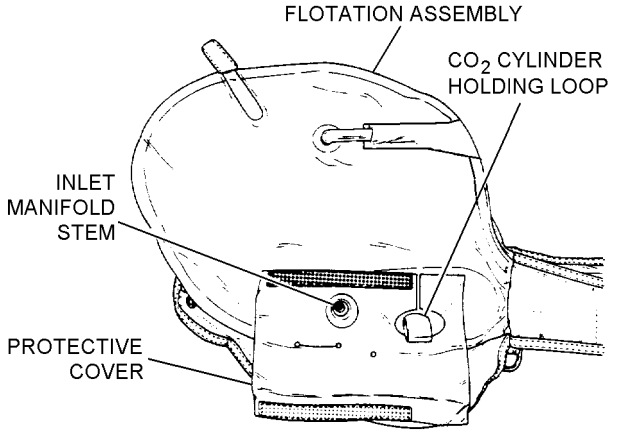

Figure 18-7. Installation of Inflation Valve Protective Cover

18-55. INSTALLATION OF CO_2 CYLINDERS. To install cylinders proceed as follows:

Support Equipment Required

Quantity	Description	Reference Number
1	Scale (Gram)	A-A-52021-1 NIIN 00-514-4117 or equivalent
1	Die, Cylinder Thread Chaser	1842-008-01 (CAGE 03688) NIIN 00-069-4040

Materials Required

Quantity	Description	Reference Number
As Required	Cylinder, CO_2 Type III, 35-Gram	MIL-C-25369C
1	Seat Seal, O-Ring, Multi	NIIN 01-046-3300

CAUTION

Ensure that packaging cord is not pinched between piercing pin and actuating lever. If there is free play in actuating lever when in its cocked position, packaging cord loop is pinched. If necessary, reinstall in accordance with paragraph 18-78.

1. Weigh a charged CO_2 cylinder and compare the minimum stamped weight with the scale weight. Discard and replace cylinder if scale weight is 2 grams less than minimum stamped weight.

2. To assure a firm cylinder seat, conduct a cylinder thread count. Threaded portion of cylinder neck shall contain a minimum of seven full threads to assure a firm cylinder seat within valve body. Any cylinder found with less than seven full threads shall be discarded. See figure 18-8.

CAUTION

Steel threads on CO_2 cylinder can cause damage to aluminum threads on inflator if cylinder is not carefully threaded. If binding occurs during installation on cylinder, use thread chaser dye on cylinder thread to cut free excessive plating. Reinstall cylinder. If binding still occurs, replace cylinder.

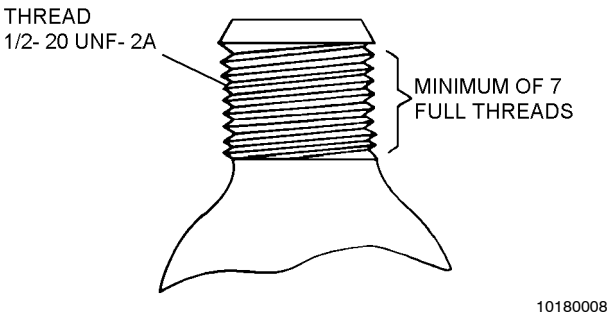

Figure 18-8. Cylinder Thread Count

3. Using the cylinder thread chaser die, turn the thread chaser to the full extent of the threads on the CO_2 cylinder to cut free any excessive plating covering the threads.

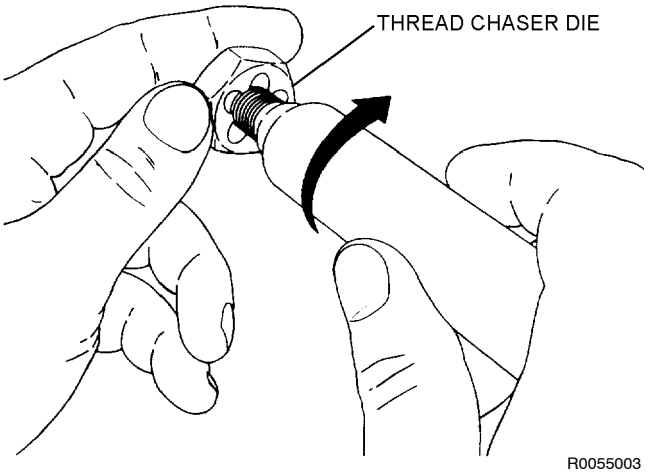

Step 3 - Para 18-55

NOTE

During intermediate inspection, inspect condition of O-ring and replace as necessary. After each functional inspection, the O-ring seal shall be replaced.

4. Insert new O-ring and turn CO_2 cylinder into inflator body as far as hand twisting will permit.

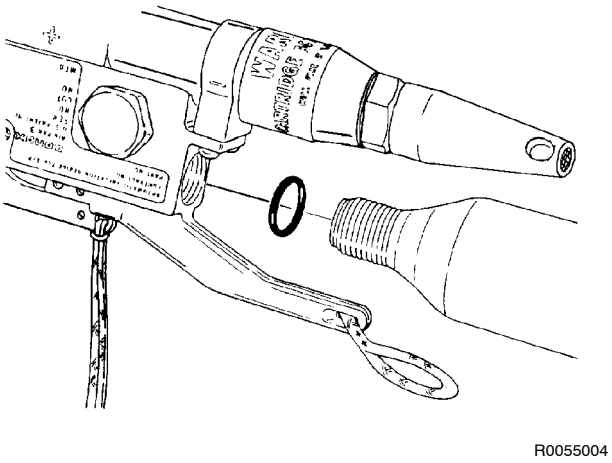

Step 4 - Para 18-55

NOTE

Check for secure cylinder fit and ensure that CO_2 cylinder passes through the CO_2 cylinder holding patch loop.

5. Close inflation valve protective covers; the secure with hook and pile tape provided.

18-56. BATTERY REPLACEMENT. To replace batteries, proceed as follows:

NOTE

Only FW14 batteries, part number 849AS103, NIIN 01-334-0724, requisitioned through the CAD/PAD ordering process are authorized for use in the FW98 Automatic Inflation Device. NAVSURFWARCENDIV Indian Head MD must approve substitute batteries in writing before installation.

Materials Required

Quantity	Description	Reference Number
2	Battery, 6-Volt Manganese Dioxide	849AS103 NIIN 01-334-0724 (FW14)

Support Equipment Required

Quantity	Description	Reference Number
1	Multimeter (Digital)	8600A or equivalent (CAGE 89536) NIIN 01-010-0088
1	Wrench, 3/4-Inch	—

WARNING

No foreign object should be inserted into sensor plug ports for any reason.

1. Remove sensor plug cap using a standard 3/4-inch wrench.

WARNING

Battery may explode if recharged or disposed of in fire.

CAUTION

Never replace one battery. Always replace the pair.

2. Remove old batteries and discard.

3. Refer to NAVAIR 11-100-1.1 for battery manufacture code dates. Record date of manufacture and date of installation of new batteries in accordance with OPNAVINST 4790.2 Series.

NOTE

Manganese Dioxide batteries (FW14) have a life of three years from the date of manufacture. Do not install battery if its life expires prior to the next scheduled Calendar Inspection.

3A. Check new batteries for leakage, corrosion, dents, depressions, and cracks. If found the batteries shall be rejected.

3B. Using multimeter set-up to measure dc voltage, check each battery for shorted casing. Place one lead on the positive terminal and the other on the battery case. If a voltage reading of 0.1 volts dc or higher is obtained, reject the battery for use and discard battery in an appropriate manner.

4. Install batteries in accordance with figure 18-9.

5. Install sensor plug cap. Plug shall be held in square alignment with housing while engaging threads.

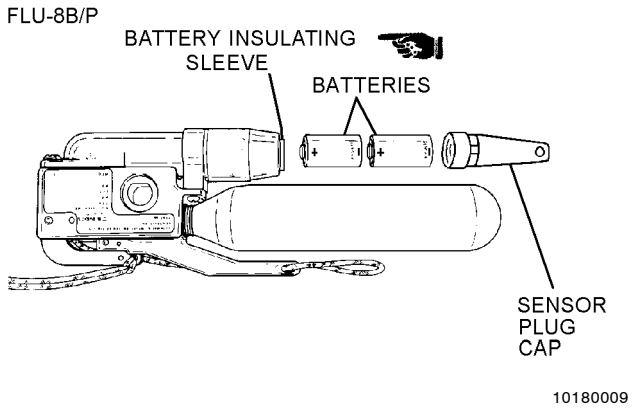

Figure 18-9. Battery Installation Arrangement

WARNING

Ensure that sensor plug cap is torqued to correct value. Do not overtighten sensor plug cap.

6. Torque FLU-8B/P sensor plug cap to 15 lb-ins using 3/4-inch socket and torque wrench.

7. Test batteries in accordance with paragraph 18-42.

18-57. REPAIR/REPLACEMENT.

18-58. This section contains instructions for the repair or modification of various components or subassemblies of life preservers to ensure that appropriate items of equipment remain in Ready For Issue (RFI) status. Reference numbers for parts which are defective, corroded or worn and require replacement are included in the applicable paragraph of this section. Other replacement parts, such as carrying cases and personal survival equipment, are listed in the applicable table of each chapter. Procedures are applicable to the type life preserver described in parentheses following the title of the repair or modification, or before a step.

18-59. Replacement of easily removed assembly components such as CO_2 inflation valves and survival items are authorized in addition to repair and replacement procedures documented in this section. The life preserver shall be subjected to a functional and leakage test each time CO_2 inflation valves are removed and replaced for any reason, and each time inflation valve gaskets are replaced.

18-60. DETERMINATION OF REPAIRABILITY. Patching of holes, cuts, tears or punctures 1-inch square or less are the only repairs authorized in a life preserver bladder. Life preserver shall be considered beyond repair for any of the following reasons:

1. Porous fabric areas on flotation bladder.

2. Leakage test failure resulting from other than repairable cut, tear or puncture.

3. Holes, cuts, tears or punctures within 1-inch of flotation bladder seams.

4. Deterioration of the rubberized fabric caused by oil, grease, or any other foreign substance.

5. Deterioration of the rubberized fabric caused by a heavily mildewed condition.

18-61. CASING REPAIR PROCEDURES. To repair casings, proceed as follows:

Materials Required

Quantity	Description	Reference Number
As Required	Thread, Nylon, High Temperature Resistant, Sage Green -or-	MIL-T-83193 NIIN 00-405-2252
As Required	Thread, Nylon, Type II, Size E, Sage Green	V-T-295 NIIN 00-204-3884
As Required	Cloth, Aramid, Non-melting, Type 456, Class I, Sage Green	MIL-C-83429 NIIN 01-147-2064
As Required	Tape, Hook, Sage Green, Type II	MIL-F-21840 NIIN 00-405-2266
As Required	Tape, Pile, Sage Green, Type II	MIL-F-21840 NIIN 00-405-2263

1. Minor holes, rips, tears, or abrasions in casing assembly may be repaired if they do not exceed 2 inches.

2. Repair or replace loose or damaged hook and pile tape as required.

3. Remove bladder in areas being repaired.

4. For all repairs plus loose or broken stitching use 6 to 8 stitches per inch and back stitch one half inch.

5. Casing assembly worn beyond economical repair shall be discarded.

18-62. CASING GROMMET REPLACEMENT PROCEDURES. To replace casing grommet, proceed as follows:

Support Equipment Required

Quantity	Description	Reference Number
1	Punch, Cutting, 3/16″	3GGG-P-833 NIIN 00-180-0941
1	Pencil, Solder	W-S-570 NIIN 00-204-3855

Materials Required

Quantity	Description	Reference Number
As Required	Tape, Nylon, Sage Green, 1″ Wide	MIL-T-5038 NIIN 00-753-6144
	-or-	
As Required	Cloth, Nylon, Polyurethane-Coated, Type I	MIL-C-83489 NIIN 01-335-3129
2	Grommet, Brass, Size 00	MS20230B20 NIIN 00291-0302

1. Remove bladder in areas being repaired.

2. Remove loose grommet.

3. Reinforce worn grommet hole in casing by using either nylon tape or polyurethane-coated cloth.

a. Prepare reinforcing material.

(1) Cut and sear edges of a 1-inch piece of nylon tape.

or

(2) Cut a 1 1/2 x 1 1/2-inch piece of polyurethane-coated cloth and fold under 1/4 inch on all edges.

b. Sew reinforcing material to outside of casing, centered where possible over original grommet location. Use a cross boxstitch with 6 to 8 stitches per inch, 1/6 inch from edge.

4. Install new grommet.

a. Locate original grommet hole. Cut hole in reinforcing material using 3/16-inch cutting punch.

b. (For nylon tape only.) Carefully sear hole to prevent fraying using solder pencil.

c. Install grommet using 00 grommet setter and base.

18-63. CEMENTING LIFE PRESERVERS. All cementing of life preservers shall be performed as follows:

Materials Required

Quantity	Description	Reference Number
As Required	Toluene	TT-T-548 NIIN 00-281-2002
	-or-	
As Required	Methyl Ethyl Ketone (MEK)	TT-M-261 NIIN 00-281-2762
As Required	Talc, Technical	MIL-T-50036A NIIN 01-089-9589
As Required	Adhesive, Polyurethane (Note 1)	MIL-A-47315 P/N UR-1092 NIIN 01-375-7855

Notes: 1. Polyurethane adhesive (UR-1092) may be open purchased from the following source (minimum order $150.00):
Clifton Adhesives Inc.
Burgess Place
Wayne, NJ 07473
201-694-0845

Support Equipment Required

Quantity	Description	Reference Number
1	Roller, Wooden	GGG-R-00620 NIIN 00-243-9401
1	Brush, Disposable	NIIN 00-514-2417

WARNING

Do not use toluene or MEK near open flame, heat or electrical sparks. Avoid prolonged contact with skin or breathing of fumes. Use only in a well ventilated area.

CAUTION

Use only polyurethane adhesive on heat sealed polyurethane cloth LPU-23C/P Life Preservers.

NOTE

Toluene shall be the primary solvent used in the fabrication or repair of this assembly. MEK may be used if toluene is not available. Always use sparingly and wipe up excess solvents; do not allow to dry by evaporation.

Toluene or MEK must be applied vigorously to life preserver material over three years old in order to reactivate the material prior to cementing. Pigment from the material coloring staining a cloth rubbed over the treated surface will indicate the material has been reactivated. Cement shall be applied immediately after the surface has dried.

1. Clean both surfaces to be cemented with four applications of toluene or MEK. Apply toluene or MEK with back-and-forth strokes on the first and third applications, and one-way strokes on the second and fourth applications. Allow area to dry between applications.

CAUTION

The effective active period of adhesive mixture composed of polyurethane and an accelerator is eight (8) hours. Do not use mixture if older than eight hours.

2. Prepare only enough mixture for 8 hours. Dispose of any remaining mixture.

3. Using a disposable brush, apply cement to completely cover surfaces to be cemented. Use long, one direction strokes and complete each surface before cement becomes tacky as the brush may pull tacky cement from the surface. Allow to dry for 10 minutes.

4. Apply a second coat of cement as in step 3. Use brush strokes perpendicular to the original direction.

5. When second coat of cement has become tacky, place pieces together. If cemented area has a cut or tear, butt edges of damage before applying patch. Roll out bubbles with a wooden roller.

6. Allow cement to cure a minimum of 48 hours.

7. Dust area with talc (MIL-T-50036A).

18-64. PATCHING LIFE PRESERVERS. Life preserver is not repairable if it has holes, cuts, tears, or punctures over one-inch square. Patching of life preserver shall be performed as follows:

Materials Required

Quantity	Description	Reference Number
As Required	Cloth, Nylon, Polyurethane-Coated, Type I	MIL-C-83489 NIIN 01-335-3129

CAUTION

Use only polyurethane adhesives and polyurethane-coated cloth patches on polyurethane-coated LPU-23C/P life preserver assemblies.

NOTE

Select patch color as near as possible to color of life preserver being repaired.

Use of cloth from BCM raft/life preservers is authorized for repair with two exceptions. Inflatables condemned for contamination (oil, grease, etc.) and ALSS equipment involved in mishaps shall not be used for repairs.

1. Cut a rounded patch 1 inch larger than damage on all sides.

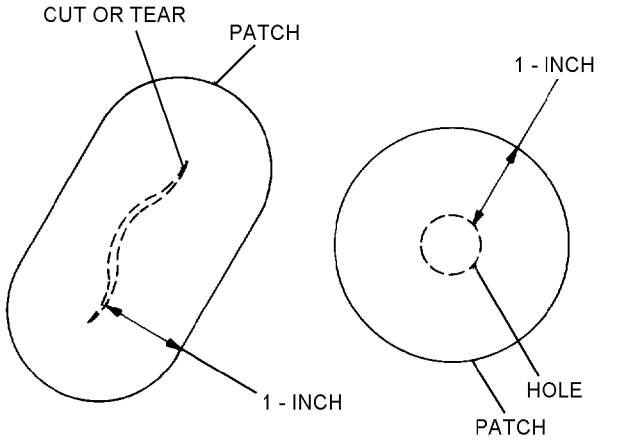

Step 1 - Para 18-64

2. Center patch over damage and trace an outline of patch on fabric.

3. Cement patch to damaged area in accordance with paragraph 18-63.

4. Dust area with talc (MIL-T-50036A).

5. Perform a leakage test.

18-65. INSPECTION RECORD PATCH.

NOTE

The 28th In-Service Management Panel meeting for Aviation Life Support Systems rescinded the requirement for the packer to sign the Inspection Record Patch on life preservers. The requirement for all other documentation remains unchanged. The reason for this change is that most history patches are unreadable and the packer's and inspector's names are documented on Aviation Crew Systems Records.

18-66. REPLACEMENT OF ORAL INFLATION VALVE. To replace the oral inflation valve, proceed as follows:

NOTE

Replacement oral inflation valves can only be obtained through salvage of BCM'ed or surveyed inflatable survival equipment.

Materials Required

Quantity	Description	Reference Number
1	Valve, Oral Inflation	—
As Required	Cement, Polychloroprene	MIL-A-5540 NIIN 00-142-9913
As Required	Brush, Disposable	NIIN 00-541-2417
As Required	Toluene	TT-T-548 NIIN 00-281-2002
	-or-	
As Required	Methyl Ethyl Ketone (MEK)	TT-M-261 NIIN 00-281-2762

Figure 18-10 Deleted.

THIS PAGE INTENTIONALLY LEFT BLANK.

CAUTION

Only toluene or MEK shall be used to clean oral inflation valve and tube. Only Polychloroprene cement (MIL-A-5540, NIIN 00-142-9913) shall be used to cement oral inflation valve into oral inflation tube.

1. Carefully cut through metal band securing oral inflation valve to oral inflation tube and remove metal band and oral inflation valve.

2. If the tip of the oral inflation tube was damaged during removal of valve, trim off damaged section.

3. Clean both surfaces to be cemented with toluene or MEK. Allow those areas to dry.

4. Using a small disposable brush, carefully apply a small amount of Polychloroprene cement to the surfaces of the tube and the valve which are to be cemented together.

5. Immediately place the oral inflation valve into oral inflation tube. Oral inflation valve should be inserted up to valve shoulder. Inspect for proper application/cement.

6. Tightly wrap the cemented portion of the oral inflation tube with cord or wire and allow to cure for 48 hours before removing wrap.

7. Perform leakage test in accordance with paragraph 18-47.

18-67. RECEMENTING OF BLADDER FIN SEAMS. Recementing of seams is not authorized.

CAUTION

Recementing of fin seams is not authorized for heat sealed LPU-23C/P Life Preservers.

18-68. Dispose of LPU-23C/P flotation assembly after usable parts have been salvaged.

18-69. DELETED

Figure 18-11. Deleted

18-70. FABRICATION OF SLIP-ON POCKETS FOR LIFE PRESERVER HARDWARE. To fabricate slip-on pockets for life preserver hardware, proceed as follows:

Materials Required

Quantity	Description	Reference Number
As Required	Cloth, Nylon, Polyurethane-Coated, Type I	MIL-C-83489 NIIN 01-335-3129
As Required	Thread, Nylon Size E	V-T-295 NIIN 00-204-3884

1. Cut two pieces of coated nylon cloth as shown.

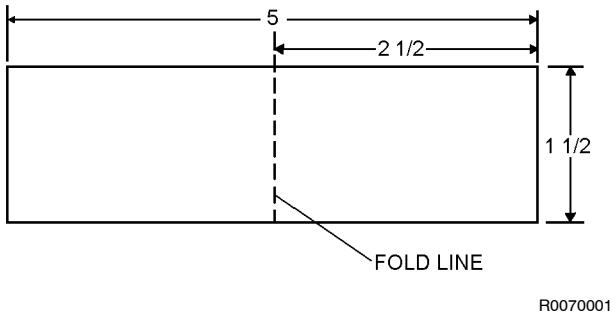

Step 1 - Para 18-70

2. Fold piece of cloth in half along fold line.

3. Sew two sides adjacent to fold forming a pocket. Use stitch type 301 stitching 8 to 10 stitches per inch.

4. Repeat steps 2 and 3 for other piece of cloth.

5. When packing life preserver, slip pockets over applicable pieces of hardware.

18-71. REPLACEMENT OF FLARE AND DYE MARKER POUCH SNAPHOOKS. To replace a broken snaphook, proceed as follows:

Materials Required

Quantity	Description	Reference Number
12 inches	Cord, Nylon, Type I	MIL-C-5040 NIIN 00-014-6699

1. Cut through ring portion of snaphook.

2. Remove snaphook and discard.

3. Pass end of cord through webbing loops on pouch and preserver ring.

4. Secure cord ends with binder knot, cut excess cord, and sear ends.

18-72. REPLACEMENT OF COLLAR LOBE SNAPHOOKS. To replace the collar lobe snaphook or webbing which is attached to the snaphook, proceed as follows:

Materials Required

Quantity	Description	Reference Number
As Required	Cloth, Nylon, Polyurethane-Coated, Type I	MIL-C-83489 NIIN 01-335-3129
As Required	Webbing, Textile, Woven Nylon, Type Ia, 3/4-inch	MIL-W-4088H NIIN 00-782-3224
2	Snaphook, CWBC1	MIL-S-43770/1 NIIN 01-187-9402
As Required	Thread, Nylon, Size E, Type I or II	V-T-295 NIIN 00-204-3884
As Required	Toluene	TT-T-548 NIIN 00-281-2002
	-or-	
	Methyl Ethyl Ketone (MEK)	TT-M-261 NIIN 00-281-2762
As Required	Talc, Technical	MIL-T-50036A NIIN 01-080-9589

NOTE

Procedural step 1 is for replacement of worn webbing and broken snaphook. Step 2 is for replacement of the snaphook patch assembly.

1. To replace worn webbing and broken snaphook, proceed as follows:

a. Cut original attachment webbing at point where it passes through eye of snaphook and sear ends.

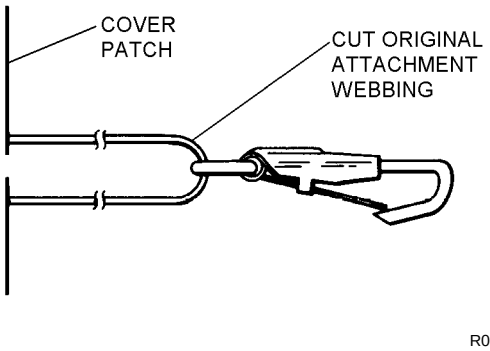

Step 1a - Para 18-72

b. Replace original snaphook with copper alloy wire snaphook.

c. Cut one 2-inch length and one 1 1/2-inch length of nylon webbing and sear ends.

d. Pass the 1 1/2-inch length of webbing through snaphook eye and stitch one row of stitching, 10 to 12 stitches per inch, close to seared ends, securing chafing webbing to snaphook eye.

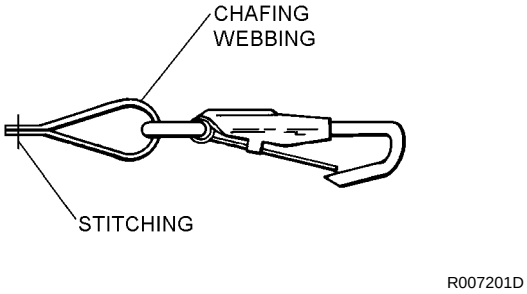

Step 1d - Para 18-72

e. Pass the 2-inch length of webbing (replacement webbing) through snaphook eye and over chafing webbing.

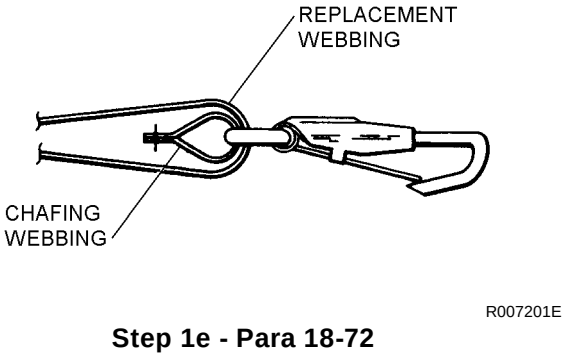

Step 1e - Para 18-72

f. Sandwich each side of original webbing between chafing webbing and replacement webbing. Stitch across webbing and backstitch forming three rows of stitching. The finished length of new webbing attachment shall be approximately 1 inch.

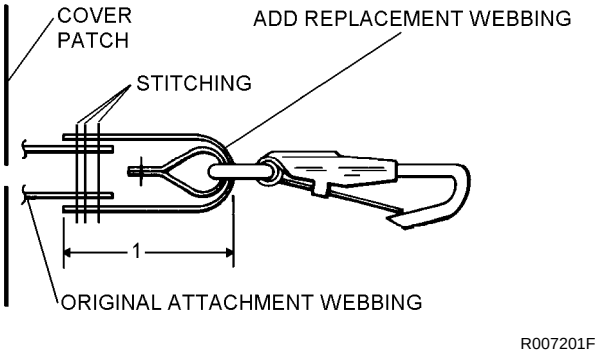

Step 1f - Para 18-72

g. Repeat steps a through f for opposite side.

2. To replace the snaphook patch assembly, proceed as follows:

WARNING

Do not use toluene or MEK near open flame, heat, or electrical sparks. Avoid prolonged contact with skin or breathing of fumes. Use only in well-ventilated area.

NOTE

Toluene shall be the primary solvent used in the fabrication or repair of this assembly. MEK may be used if toluene is not available. Always use solvents sparingly and wipe up excess solvents; do not allow to dry by evaporation.

a. Apply toluene or MEK to loosen patches. Remove patches from life preserver flotation bladder.

CAUTION

Only Polyurethane adhesives and Polyurethane-coated cloth and patches shall be used on Polyurethane-coated LPU-23C/P life preserver assemblies.

b. Fabricate cover patch from coated cloth.

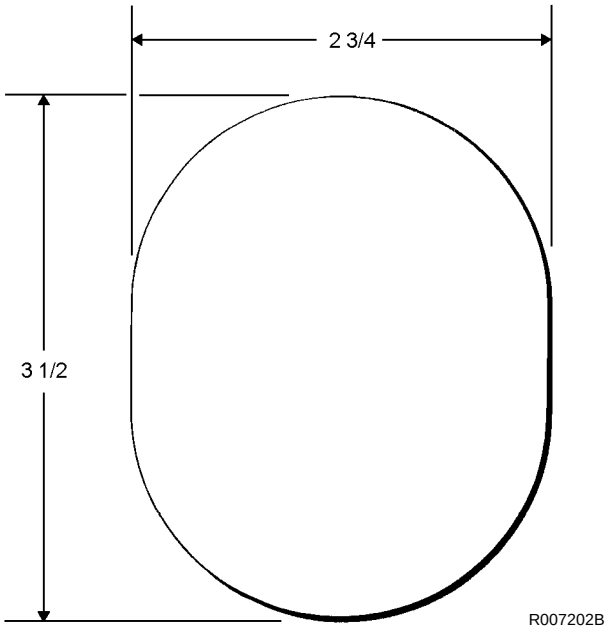

Step 2b - Para 18-72

c. Fabricate base patch from coated cloth.

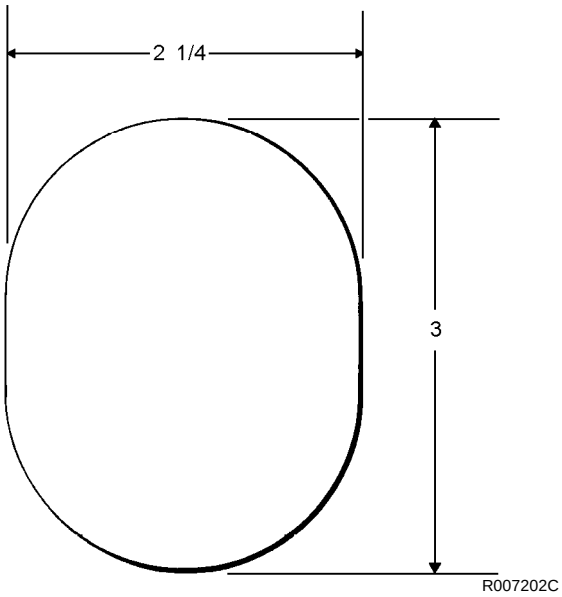

Step 2c - Para 18-72

d. Cut a 1/16 x 3/16-inch slot in cover patch.

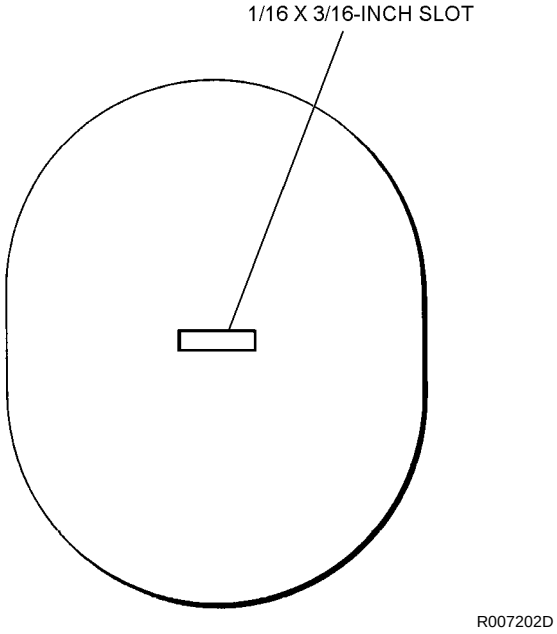

Step 2d - Para 18-72

e. Cut one 2 1/2-inch length and one 1 1/2-inch length of nylon webbing and sear ends.

f. Pass the 1 1/2-inch length of webbing through snaphook eye and stitch one row of stitching, 10 to 12 stitches per inch, close to seared ends, securing chafing webbing to snaphook eye.

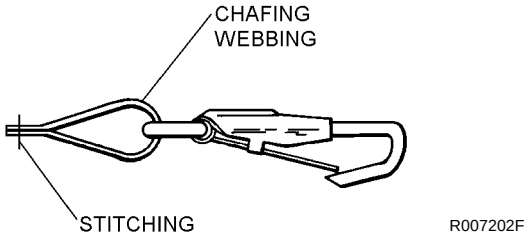

Step 2f - Para 18-72

g. Pass 2 1/2-inch length of webbing through snaphook eye and over chafing webbing.

h. Sew a single row of stitching across webbing approximately 5/8 inch from end of webbing.

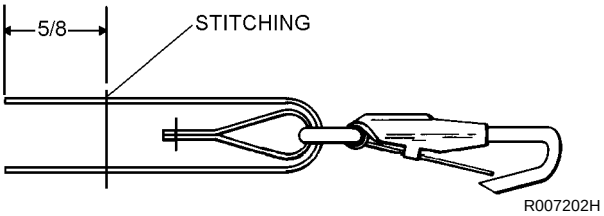

Step 2h - Para 18-72

j. Insert webbing through slot opening in cover patch and sew a 7/16 x 5/8-inch boxstitch on each end of webbing to base patch.

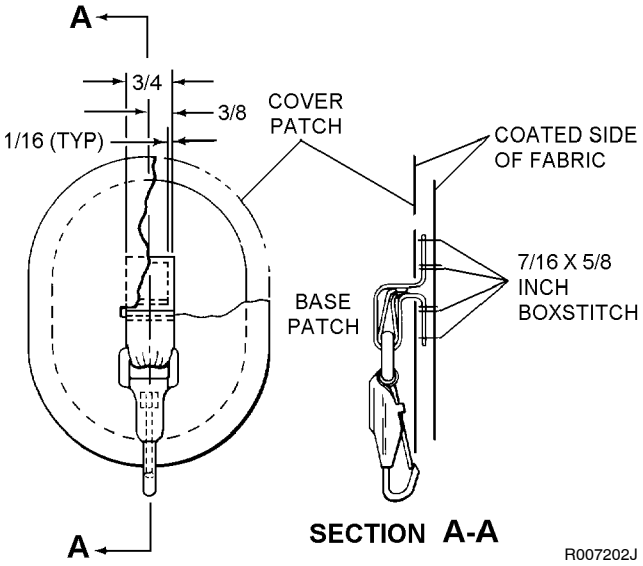

Step 2j - Para 18-72

k. Cement cover patch to base patch in accordance with paragraph 18-63.

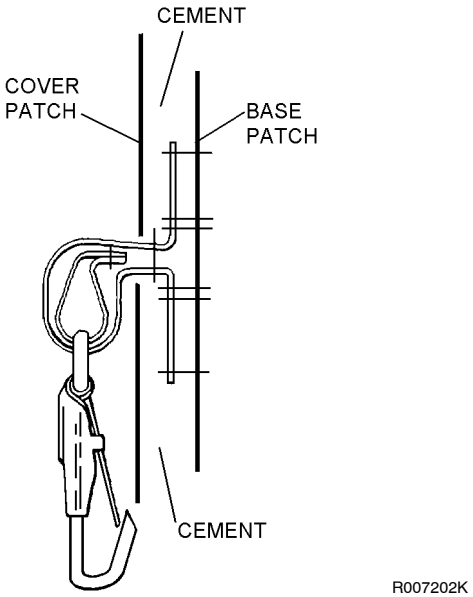

Step 2k - Para 18-72

l. Cement base patch to collar lobe on life preserver in accordance with paragraph 18-63.

m. Dust area with talc.

n. Repeat steps a through m for opposite side.

18-73. FLARE POUCH REPAIR. To repair flare pouch which will not close or is extremely difficult to close with flares installed, proceed as follows:

Materials Required

Quantity	Description	Reference Number
As Required	Thread, Nylon, Size E	V-T-295 NIIN 00-204-3884
2	Socket, Snap Fastener	MS27983-2 NIIN 00-945-2577
2	Cap, Snap Fastener	MS27983-1 NIIN 00-891-9073
3 1/2 inches	Webbing, Type VIII	MIL-W-4008

1. Remove both sets of sockets, caps, and pull tabs from pouch closure flap. Save pull tabs.

2. Position MIL-W-4008 Type VIII webbing on outside surface of pouch flap. Cut and sear webbing ends to match contour of flap end. Boxstitch webbing to flap using size E nylon thread (V-T-295). See figure 18-12.

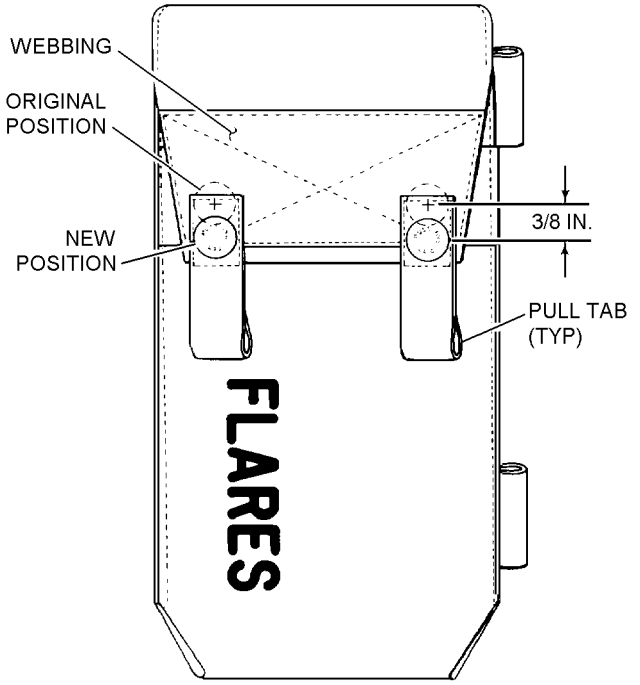

Figure 18-12. Flare Pouch Repair

3. Reposition both sets of sockets, caps, and pull tabs 3/8 inch closer to flap end. Use original pull tabs.

18-74. DISASSEMBLY OF THE LIFE PRESERVER. To disassemble the life preserver for bladder or case repairs, proceed as follows:

NOTE

Life preserver shall be disassembled only to the extent necessary to perform required maintenance or inspection.

The uni-directional snap fastener socket is installed with the dot on its button oriented to the side of the fastener on which lift must be applied to disengage socket from the snap fastener stud.

1. Disengage uni-directional snap fasteners securing waist lobes to casing by applying lift on the dot-side snap fastener buttons.

2. Open casing and remove both inflation assemblies.

3. Reattach cap nuts to valve stems.

4. Release all hook and pile tape fasteners.

5. Fold collar lobe and waist lobes to width of casing.

6. Hold casing at collar and pull flotation assembly down and out of casing, one lobe at a time.

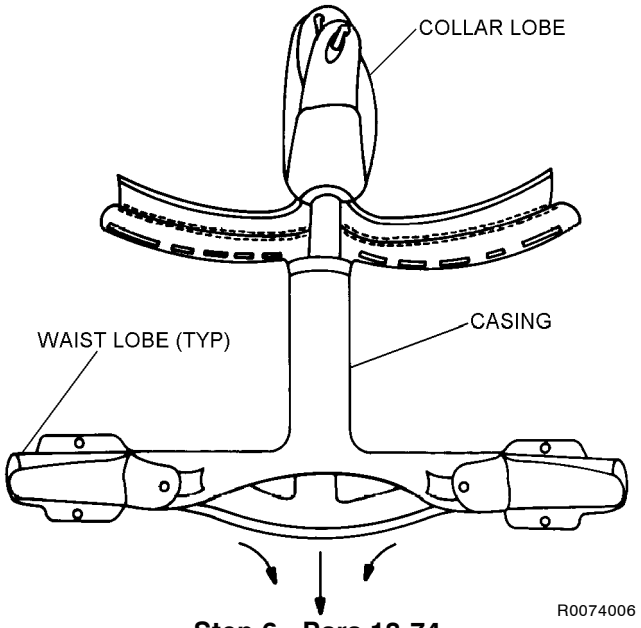

Step 6 - Para 18-74

18-75. REASSEMBLY OF THE LIFE PRESERVER. To reassemble the life preserver proceed as follows:

Materials Required

Quantity	Description	Reference Number
3 feet	Cord, Nylon, Type III	MIL-C-5040 NIIN 00-240-2146
2	Valve Stem Kit (Note 1)	105AS100-6 (CAGE 30003) NIIN 00-113-8290

Notes: 1. Valve Stem Kit, P/N 105AS100-6, NIIN 00-113-8290, contains one top and one bottom gasket.

1. Attach one end of a 3-foot length of Type III nylon cord to snaphook on collar lobe.

CAUTION

Ensure flotation assembly is not twisted in casing channels.

2. Insert free end of nylon cord through back channel of casing and pull collar lobe into casing. Remove nylon cord from collar snaphook. Insert waist lobes through casing waist channels.

3. When flotation assembly is in casing assembly, ensure that it is in proper configuration and is not twisted inside casing.

4. Align uni-directional snap fastener sockets of flotation assembly waist lobe attachment patch with snap fastener studs of casing assembly and secure waist lobes to casing assembly.

5. Remove old inflation stem gaskets and replace with new gaskets. Reinstall inflation assemblies and protective covers. Pack life preserver in accordance with applicable paragraph.

18-76. REPLACEMENT OF BEADED INFLATION HANDLE ASSEMBLY. To replace the beaded inflation handle, proceed as follows:

Materials Required

Quantity	Description	Reference Number
As Required	Handle, Beaded, Inflation	975AS121-11 NIIN 01-120-4752 (CAGE 30003)
As Required	Thread, Nylon, Size E	V-T-295 NIIN 00-204-3884

1. Open snap fastener on locking pin cover; then cut and remove safety tie securing eye of locking pin to retaining loop. Carefully remove locking pin from pin keeper and retaining loop.

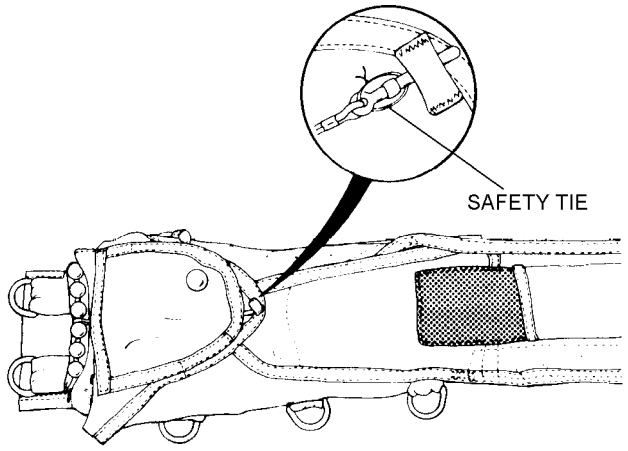

R0076001

Step 1 - Para 18-76

2. Open flaps and unfold life preserver assembly.

3. Remove CO_2 cylinder from CO_2 inflator assembly. Retain CO_2 cylinder for reinstallation.

4. Remove inflation lanyard from inflator assembly; then unsnap beaded inflation handle from life preserver casing.

5. Secure new beaded handle inflation lanyard to actuating lever by passing lanyard through grommet in bottom casing flap and through hole in end of actuating lever. Pass lanyard back through grommet in bottom casing flap and form lark's head knot.

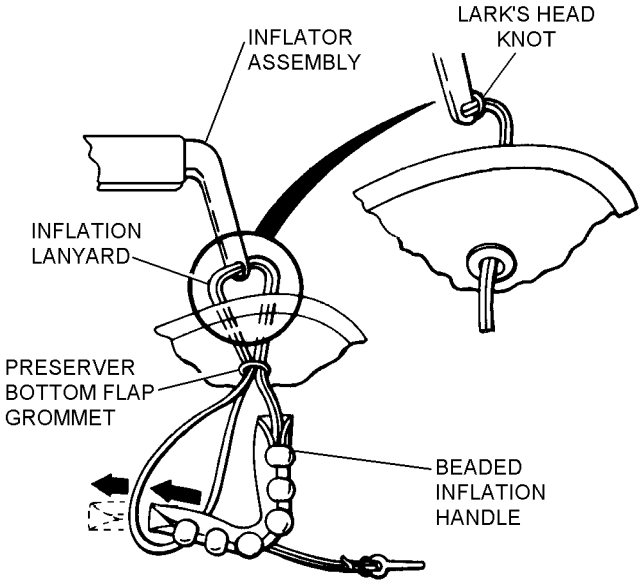

R0076005

Step 5 - Para 18-76

6. Fasten beaded inflation handle to casing with snap fasteners provided; then safety-tie beaded inflation han-

dle with one turn of size E nylon thread, single. Draw thread sufficiently to permit 1/2-inch ± 1/8-inch space between the middle beads and webbing on the preserver. Tie ends of both safety ties with a surgeon's knot followed by a square knot.

NOTE

Ensure that overhand knot on locking pin lanyard is within 3/4 inch from eye of pin.

7. Route locking pin under outboard flap cover panel and through No. 3 spur grommet.

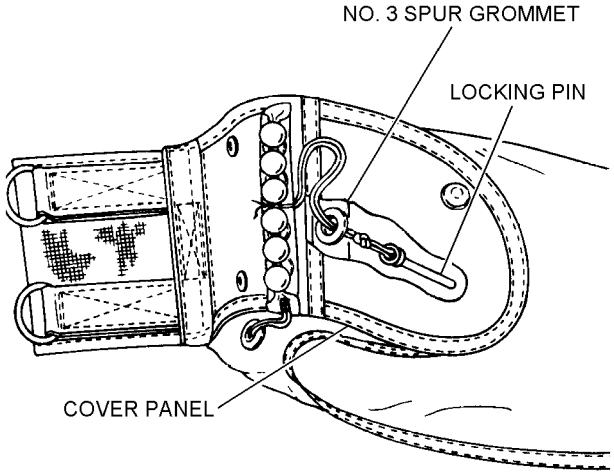

NOTE: LEFT LOBE SHOWN

R0076007

Step 7 - Para 18-76

NOTE

On some late issue LPU-23C/P life preserver casings, the No. 3 spur grommet has been deleted.

8. Route the locking pin under the locking pin cover flap through the opening in the stitching at the base of the flap, through the retaining loop/packaging cord loop, and under the pin keeper loop.

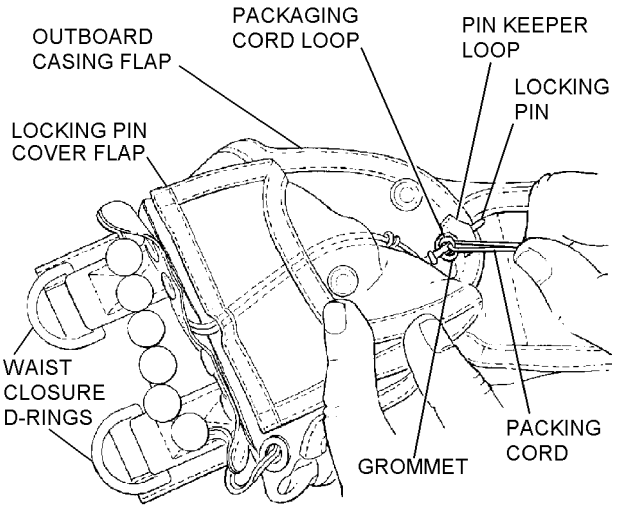

(WITHOUT NO. 3 SPUR GROMMET)

NOTE: LEFT LOBE SHOWN

R0076008

Step 8 - Para 18-76

9. Perform beaded inflation handle pull test. Refer to paragraph 18-46.

10. Recock CO_2 inflator and install CO_2 cylinder.

NOTE

Ensure that all hook and pile tapes are securely mated.

11. Pack life preserver in accordance with the applicable paragraph.

12. Make necessary entries on appropriate form in accordance with OPNAVINST 4790.2 Series.

NOTE

FLU-8A/P Automatic Inflators shall be replaced with FLU-8B/P Automatic Inflators if found in service during scheduled maintenance.

18-77. REPLACEMENT OF FLU-8B/P AUTOMATIC INFLATOR ASSEMBLY. To replace damaged, overage, or spent FLU-8B/P automatic inflators, proceed as follows:

Support Equipment Required

Quantity	Description	Reference Number
1	Socket, 9/16-inch, 6-point, or 13-mm, 6-point torque	—
1	Wrench, Torque	—

Materials Required

Quantity	Description	Reference Number
1	Cylinder, CO_2 Type III, 35 Grams	MIL-C-25369
As Required	Thread, Nylon, Size A, Type I or II	V-T-295 NIIN 00-204-3803
1	FLU-8B/P Automatic Inflation Device consisting of:	FW-98 849AS153 (CAGE 30003) NIIN 01-364-4089
1	Inflator Subassembly	1612-009 (CAGE 03688)
1	Sensor Plug Cap Assembly	P/N 1813-044-02 (CAGE 03688)
1	Packaging Cord	1138-003-01 (CAGE 03688) NIIN 01-066-3357
1	Valve Stem Kit (Note 1)	105AS100-6 (CAGE 30003) NIIN 00-113-8290

Materials Required (Cont)

Quantity	Description	Reference Number
1	Seat Seal, O-Ring, Multi	NIIN 01-046-3300
1	Sleeve, Battery Insulating (Note 2)	1122-095

Notes: 1. Valve Stem Kit, P/N 105AS100-6, NIIN 00-113-8290, contains one top and one bottom gasket.

2. The battery insulating sleeve is not a stocked item. After installation directed by Aircrew Systems Bulletin 976, it becomes part of the FLU-8B/P Unit. Replacement sleeves are issued by Indian Head Division, NSWC.

WARNING

The FLU-8B/P automatic inflator is a cartridge-activated device and will fire if immersed in fresh or salt water. This device is to be installed only on life preservers used by aircrewmembers in ejection seat type aircraft.

1. Remove CO_2 cylinder from inflator.

2. Remove inflation lanyard from inflation actuating lever; then remove damaged, over-age, or spent automatic inflation assembly.

NOTE

The following component parts may be reused and retained as spares: sensor plug cap, CO_2 cylinder, packaging cord loop, and cap nut.

3. Handle damaged or spent FLU-8B/P inflators in accordance with Federal Regulation 49, CFR 173.55.

4. Examine inflation actuating lever, beaded handle, inflation lanyard, nylon locking pin, sensor plug cap, and packaging cord loop for fraying, corrosion, stripped threads, and other damage.

5. Remove beaded handle inflation lanyard from actuating lever by removing lark's head knot. Retain beaded inflation handle for reinstallation.

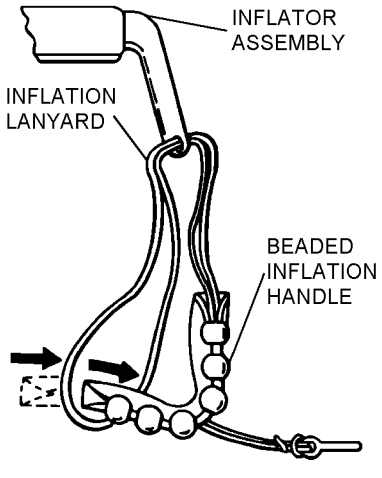

Step 5 - Para 18-77

6. Operate manual actuating lever three or four times to ensure that lever moves freely. Check to ensure that piercing pin moves freely inside valve body and goes through center of packaging cord loop.

7. Ensure that packaging cord loop is not pinched between piercing pin and actuating lever. If there is free play in actuating lever when it is in its cocked position, packaging cord loop is pinched. If necessary, reinstall in accordance with paragraph 18-78.

8. Install protective cover onto life preserver assembly.

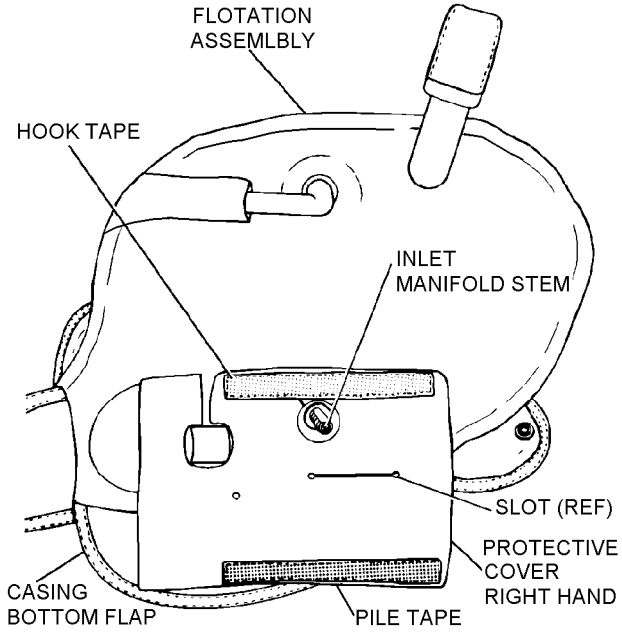

Step 8 - Para 18-77

9. Install beaded handle inflation lanyard to actuating lever by passing inflation lanyard through bottom flap grommet of life preserver assembly and protective cover. Then attach inflation lanyard to actuating lever by a lark's head knot.

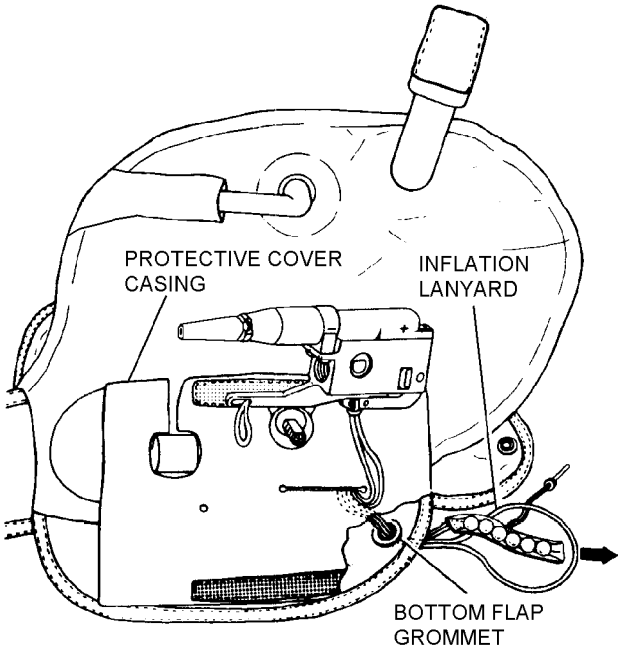

Step 9 - Para 18-77

10. Fasten beaded inflation handle to casing with snap fasteners provided.

11. Perform beaded inflation handle pull test in accordance with paragraph 18-46.

12. Replace beaded inflation handle to casing with snap fasteners; then safety-tie with size E nylon thread. Ensure that thread is drawn sufficiently to permit a 1/2-inch ±1/8-inch space between the middle beads and webbing on preserver.

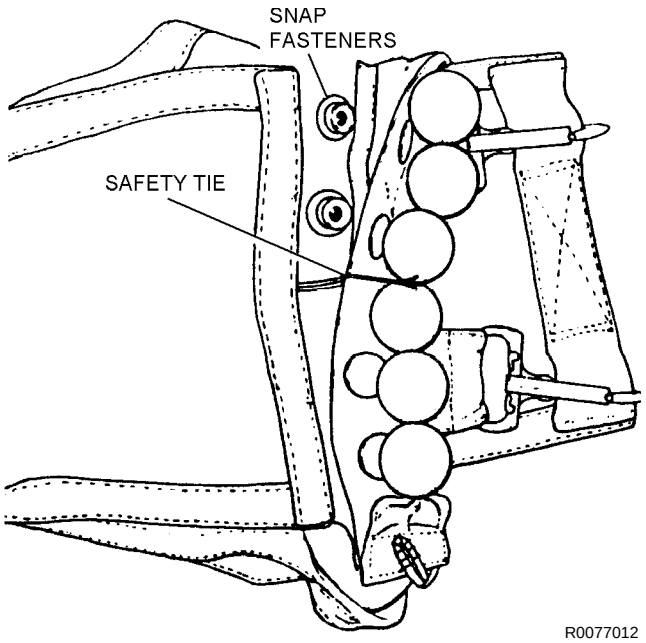

Step 12 - Para 18-77

13. Ensure that packaging cord is not pinched between piercing pin and actuating lever. If there is free play in the actuating lever when it is in its cocked position, packaging cord loop is pinched. If necessary, reinstall in accordance with paragraph 18-78.

14. Make necessary entries on appropriate form in accordance with OPNAVINST 4790.2 Series including:

a. Date of installation of each FLU-8B/P.

b. Date of manufacture of each FLU-8B/P. See figure 18-4.

c. Lot number of each FLU-8B/P. See figure 18-4.

d. Serial number of each FLU-8B/P.

e. Date of installation of batteries.

f. Date of manufacture of batteries. Refer to paragraph 18-41.

NOTE

For data on total life of the FLU-8B/P automatic inflation assembly, refer to NAVAIR 11-100-1.1. If total life expiration date occurs before date of next scheduled calendar inspection, replace inflator assembly. The manganese dioxide batteries used in the assembly have a total life of 3 years from the date of manufacture.

15. Install bottom gasket over manifold stem and position at manifold base. The bottom gasket has a smaller internal diameter than the top gasket.

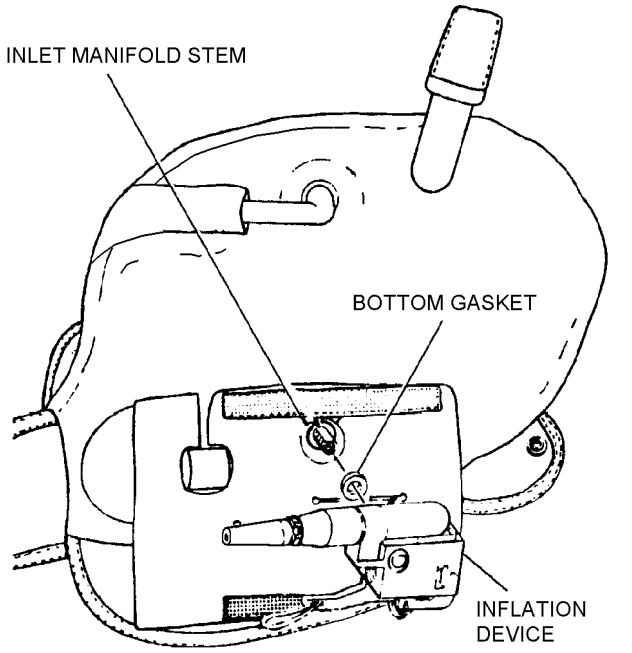

Step 15 - Para 18-77

16. Install inflator body on manifold stem.

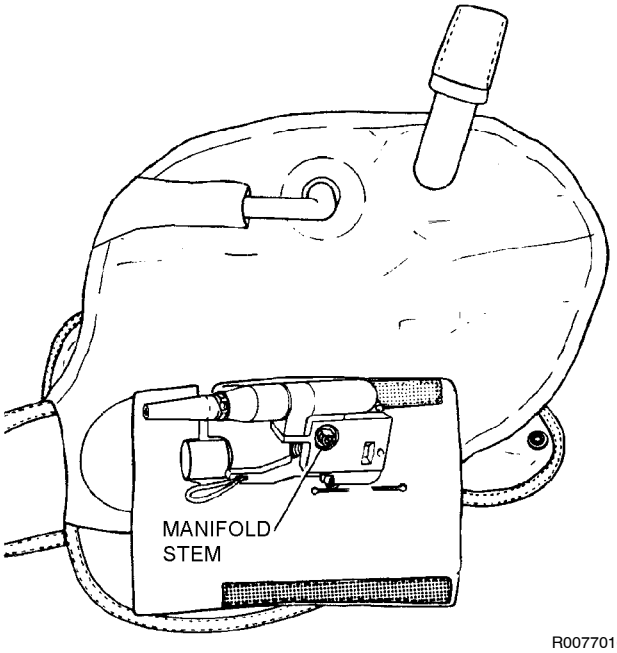

Step 16 - Para 18-77

17. Install top gasket on manifold stem. Position on top of the inflator body.

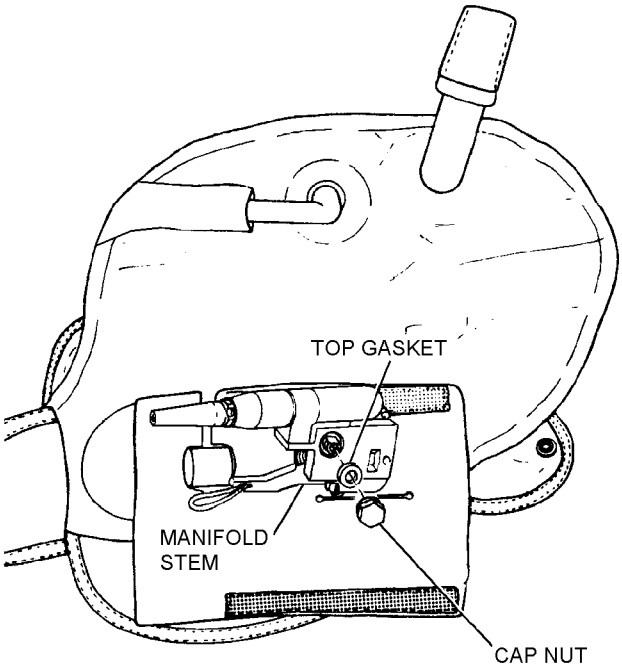

Step 17 - Para 18-77

CAUTION

Valve stem may rotate if cap nut is over torqued.

18. Install cap nut on manifold stem, securing inflator to a torque value of 8 ±1 in-lb.

19. Install batteries in accordance with paragraph 18-56.

CAUTION

The functional test will be performed in the manual mode only. The automatic inflator (FLU-8B/P) may be operated an unlimited amount of times in the manual mode without affecting its automatic capability. Automatic actuation requires replacement of the inflation assembly.

NOTE

During intermediate inspection, inspect condition of O-ring and replace if necessary. After each functional inspection the O-ring seal shall be replaced.

20. Install CO_2 cylinder in accordance with paragraph 18-55. Perform functional test in accordance with paragraph 18-36.

21. Deflate life preserver in accordance with paragraph 18-37, and remove spent CO_2 cylinder and O-ring.

22. Perform a leakage test in accordance with paragraph 18-47.

23. Install a 35-gram, Type III CO_2 cylinder in accordance with paragraph 18-55.

WARNING

The packaging cord loop must be routed under the manual actuating lever, under the valve guide arm, then up through the valve guide arm hole. (See figure 18-13.)

24. Ensure that packaging cord loop is routed as in figure 18-13.

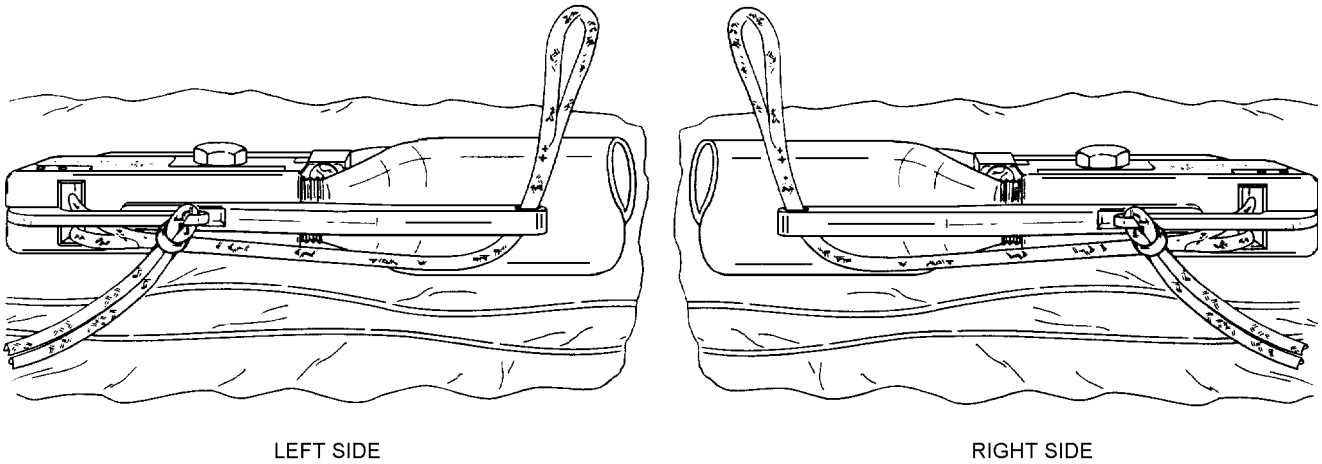

Figure 18-13. Packaging Cord Loop Routing

18-78. REPLACEMENT OF PACKAGING CORD ON THE FLU-8B/P AUTOMATIC INFLATOR. To replace packaging cord loop on the FLU-8B/P automatic inflator proceed as follows:

Materials Required

Quantity	Description	Reference Number
1	Screw, Retaining, Piercing Pin	1842-006-01 (CAGE 03688)
1	O-ring	MS28775-012 NIIN 00-005-0426
1	Packaging Cord	1138-003-01 (CAGE 03688) NIIN 01-066-3357

1. Remove CO_2 cylinder and O-ring from inflator.

2. Carefully remove inflator from life preserver.

3. Remove damaged cord.

4. Start the piercing pin retaining screw into the appropriate hole.

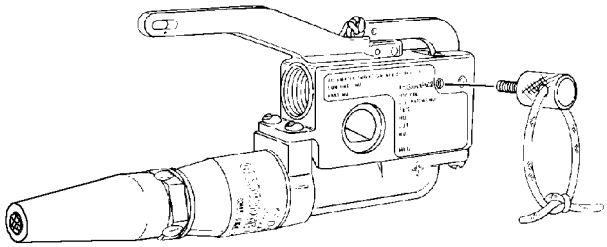

Step 4 - Para 18-78

5. Turn the screw until it just touches the piercing pin then back off one turn.

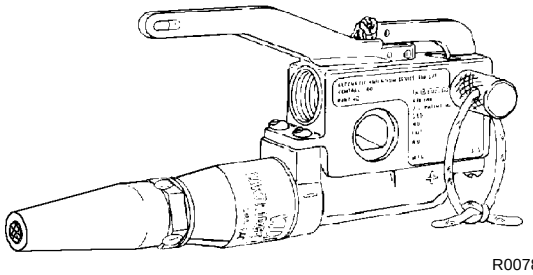

Step 5 - Para 18-78

6. Operate the actuating lever to its mid-actuated position.

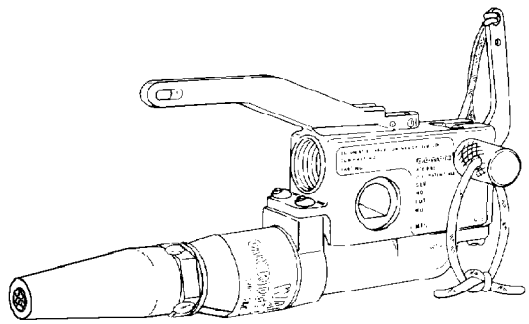

R0078006

Step 6 - Para 18-78

7. While holding the actuator lever in the mid-actuated position, tighten the retaining screw to hold the piercing pin in its full penetrating position.

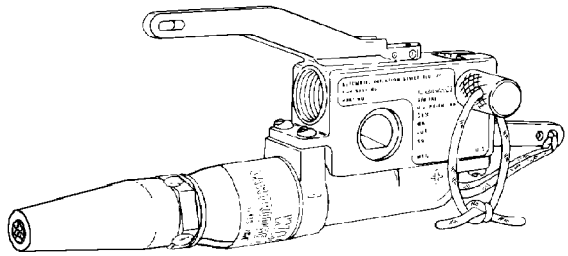

R0078008

Step 8 - Para 18-78

8. Operate the actuating lever to its full actuated position.

9. Insert the new packaging cord loop in the open lot on the inflator body.

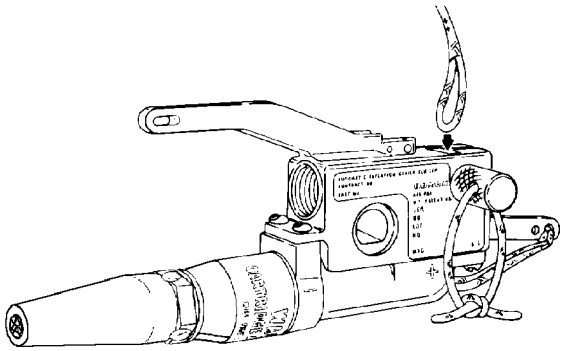

R0078009

Step 9 - Para 18-78

NOTE

There is an open slot on the opposite side of the body from the retaining screw hole. This slot may help in positioning the loop such that when the piercing pin, when released, will pass through the loop.

10. Operate the actuating lever to mid-actuating position. Remove the retaining pin, allowing the piercing pin to retract securing the loop.

11. Return actuating lever to normal position and ensure that actuating lever is properly cocked. If there is free play in actuating lever when it is in its cocked position, packaging cord loop is pinched. If necessary repeat steps 4 through 11 until actuating lever is properly cocked.

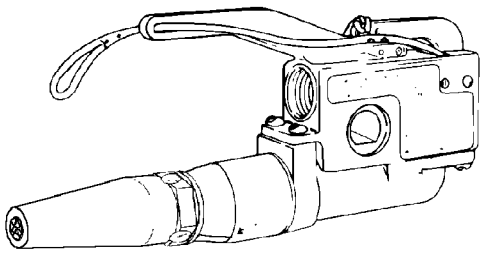

R0078011

Step 11 - Para 18-78

12. Replace inflator onto life preserver. Refer to paragraph 18-77.

13. Install new O-ring and charged CO_2 cylinder. Refer to paragraph 18-55.

14. Perform function test (refer to paragraph 18-36) and leakage test (refer to paragraph 18-47) and return to service.

CAUTION

The packaging cord loop is always routed under the guide arm and then up through the guide arm hole. See figure 18-13.

18-79. REPLACEMENT OF SENSOR PLUG CAP ASSEMBLY ON FLU-8B/P AUTOMATIC INFLATOR. To replace damaged or defective sensor plug cap, proceed as follows:

Support Equipment Required

Quantity	Description	Reference Number
1	Sensor Plug Cap Assembly	P/N 1813-044-02 (CAGE 03688)

WARNING

No foreign object should be inserted into sensor plug ports for any reason.

1. Remove damaged or defective sensor plug cap using a standard 3/4-inch wrench. See figure 18-14.

2. Ensure sensor plug spring is symmetrical in form and securely mounted.

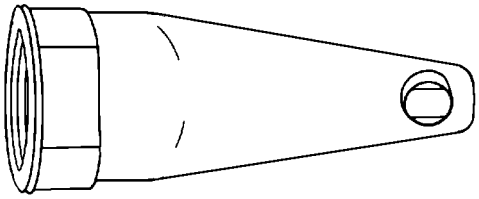

10180014

Figure 18-14. FLU-8B/P Sensor Plug Cap

3. Install new sensor plug cap. Plug shall be held in square alignment with housing while engaging threads. Ensure batteries are installed in accordance with paragraph 18-56.

4. Torque FLU-8B/P sensor plug cap to 15 lb-in using 3/4-inch socket and torque wrench.

5. Test batteries in accordance with paragraph 18-42.

18-80. REPLACEMENT OF TOP AND BOTTOM GASKETS. To replace the top and bottom gaskets on the FLU-8B/P inflator, proceed as follows:

Materials Required

Quantity	Description	Reference Number
1	Valve Stem Kit (Note 1)	105AS100-6 (CAGE 30003) NIIN 00-113-8290

Notes: 1. Valve Stem Kit, P/N 105AS100-6, NIIN 00-113-8290, contains one top and one bottom gasket.

1. Remove cap nut and top gasket from inflator.

2. Remove inflator and replace bottom gasket.

3. Carefully place inflator onto valve stem.

4. Install top gasket onto valve stem.

CAUTION

Valve stem may rotate if cap nut is over torqued.

5. Tighten cap nut onto valve stem and torque to a value of 8 ±1 in-lb.

6. Perform functional and leakage tests on life preserver cell that was repaired. Refer to paragraphs 18-36 and 18-47.

18-81. REPLACEMENT OF CHECK VALVE ASSEMBLY. To replace a defective check valve assembly, proceed as follows:

Support Equipment Required

Quantity	Description	Reference Number
1	Tool, Valve Core	8769A or equivalent (CAGE 27783)
1	Wrench, Torque	—

Materials Required

Quantity	Description	Reference Number
1	Valve, Pneumatic Inflator (Check Valve Assembly) (Note 1)	Schrader-Bridgeport P/N 8457500047

Notes: 1. Schrader-Bridgeport P/N 8457500047 must be open purchased from:
Schrader-Bridgeport Intl
205 Frazier Rd
P.O. Box 668
Altivista, VA 24517
Phone (804) 369-8875

1. If not available, fabricate a valve core tool as shown in Chapter 3.

2. Remove inflator cap nut.

3. Insert valve core tool and unscrew check valve from valve stem.

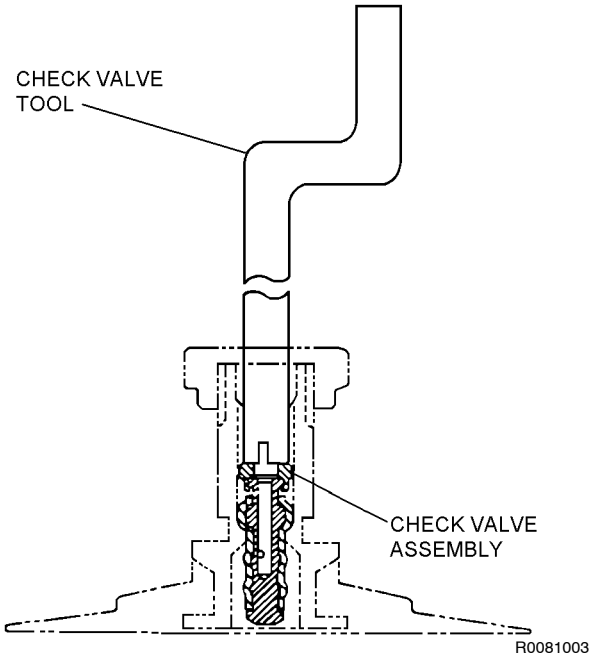

Step 3 - Para 18-81

4. Insert new check valve in valve stem and tighten with valve core tool hand tight.

CAUTION

Valve stem may rotate if cap nut is over torqued.

5. Replace cap nut and torque to a value of 8 ±1 in-lb.

6. Perform a functional and leakage test on life preserver cell that was repaired. Refer to paragraphs 18-36 and 18-47.

18-82. FABRICATION OF PROTECTIVE COVER ASSEMBLY. To fabricate a protective cover, proceed as follows:

Materials Required

Quantity	Description	Reference Number
17 x 6 inches	Cloth, Nylon, Polyurethane-coated, Type I	MIL-C-83489 NIIN 01-335-3129
12 x 5/8 inches	Fastener Tape, Hook, Type II	MIL-F-21840
12 x 5/8 inches	Fastener Tape, Pile, Type II	MIL-F-21840
As Required	Thread, Nylon, Type I or II, Size E, Sage Green	V-T-295 NIIN 00-204-3884

NOTE

Procedural step 1 is for a right protective cover and step 2 is for a left protective cover.

1. To fabricate a right protective cover, proceed as follows:

a. Cut an 8 1/2-inch length of coated nylon cloth.

b. Cut a 6-inch length of hook and pile tape and sew to the coated side of the coated nylon cloth. Use stitch type 301 stitching 8 to 10 stitches per inch.

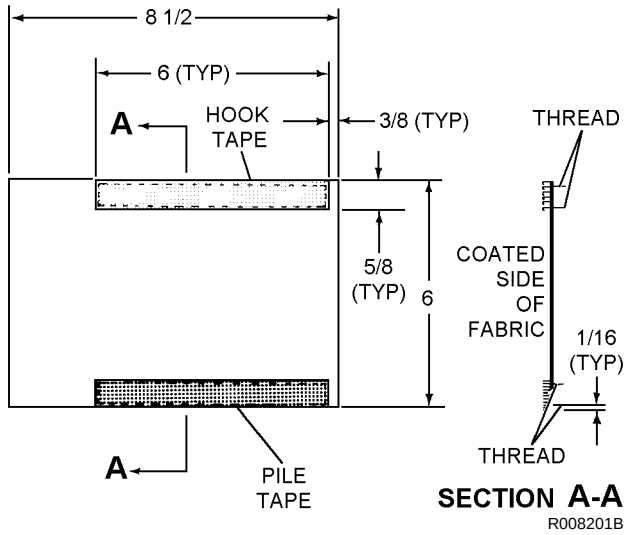

Step 1b - Para 18-82

c. Position coated nylon cloth, coated side up, over cutting board and punch a 1 7/16-inch diameter hole, a 1-inch diameter hole and three 3/8-inch diameter holes.

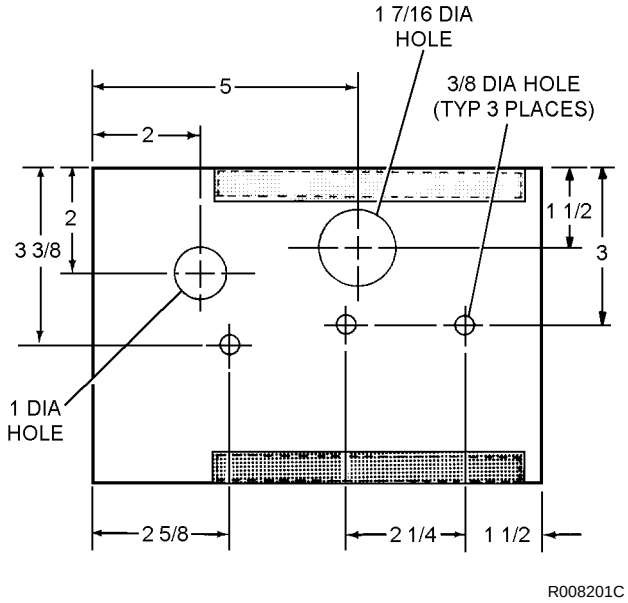

Step 1c - Para 18-82

d. Cut slit between two 3/8-inch diameter holes.

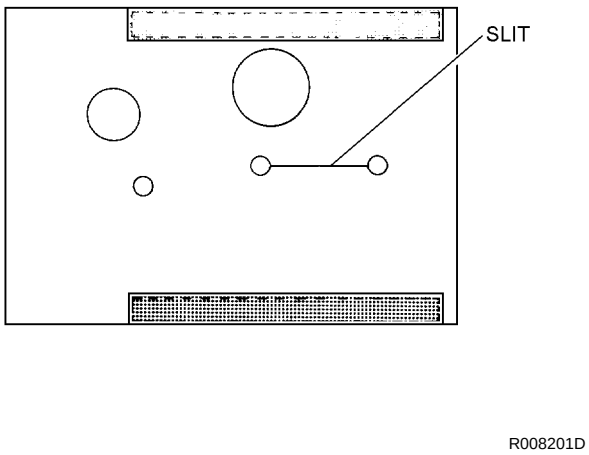

Step 1d - Para 18-82

2. To fabricate a left protective cover, proceed as follows:

a. Cut an 8 1/2-inch length of coated nylon cloth.

b. Cut a 6-inch length of hook and pile tape and sew to the coated side of the coated nylon cloth.

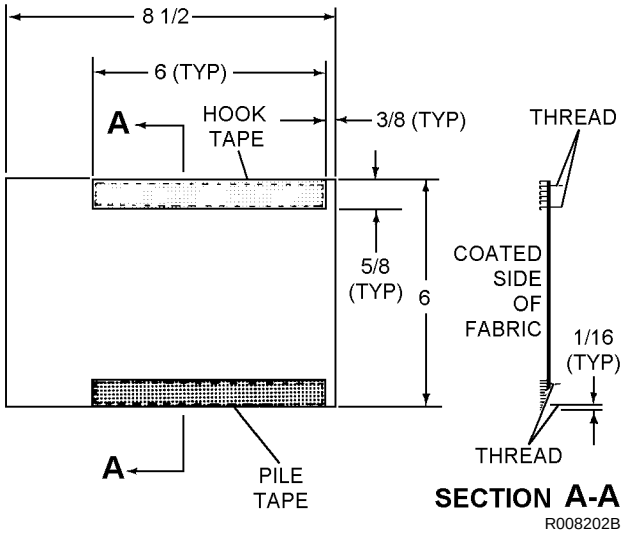

Step 2b - Para 18-82

c. Position coated nylon cloth, coated side up, over cutting board and punch a 1 7/16-inch diameter hole, a 1-inch diameter hole and three 3/8-inch diameter holes.

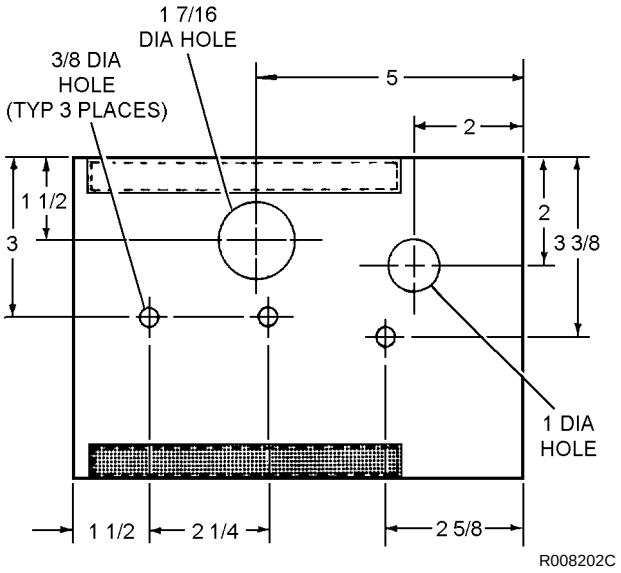

Step 2c - Para 18-82

d. Cut slit between two 3/8-inch diameter holes.

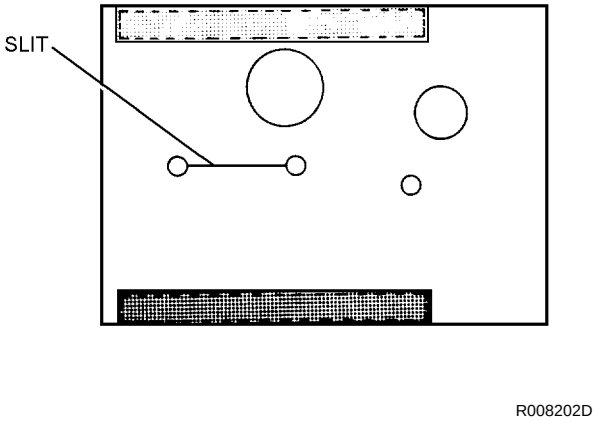

Step 2d - Para 18-82

18-83. FABRICATION OF COLLAR LOBE WEBBING LOOPS. To fabricate collar lobe webbing loops, proceed as follows:

Materials Required

Quantity	Description	Reference Number
18-inch Length	Webbing, Nylon, Type IV, 1-inch Width	MIL-T-5038 NIIN 00-261-8579 (CAGE 81349)
2	Post, Snap Fastener	MS27981-5B NIIN 00-250-6858 (CAGE 96906)
2	Stud, Snap Fastener	MS27981-4B NIIN 00-901-9660 (CAGE 96906)
2	Socket, Snap Fastener	M527981-3B NIIN 00-276-4966 (CAGE 96906)
2	Cap, Snap Fastener	M527981-1B NIIN 00-276-4954 (CAGE 96906)

Materials Required (Cont)

Quantity	Description	Reference Number
As Required	Thread, Nylon Type II, Size E	V-T-295 NIIN 00-204-3884

NOTE

All stitching shall be 10 to 12 stitches per inch, size E nylon thread.

1. Cut two 9-inch lengths of 1-inch wide nylon webbing and sear ends.

2. Sew one piece of webbing to outer side of each collar lobe casing in accordance with dimensions shown in figure 18-15.

3. Position and install snap fasteners in accordance with dimensions shown in figure 18-15, and ensure proper mate.

18-84. FABRICATION AND INSTALLATION OF WAIST LOBE ATTACHMENT PATCH. The following procedures pertain to the fabrication and installation of the left waist lobe attachment patch. These instructions are typical and are applicable for right waist lobe installations.

Materials Required

Quantity	Description	Reference Number
12	Cap, Snap Fastener	MS27983-1 NIIN 00-891-9073
12	Socket, Snap Fastener	MS27983-2 NIIN 00-945-2577
12	Stud, Snap Fastener	MS27983-3 NIIN 00-276-4908
12	Post, Snap Fastener	MS27983-1 NIIN 00-276-4978
As Required	Cloth, Nylon, Polyurethane-coated, Type I	MIL-C-87178 NIIN 01-335-3129
As Required	V-Tape, 1-inch	1957AS111-6
As Required	Adhesive, Polyurethane	MIL-A-47315 P/N UR-1092 NIIN 01-375-7855
As Required	Toluene	TT-T-548 NIIN 00-281-2002
	-or-	
	Methyl Ethyl Ketone (MEK)	TT-M-261

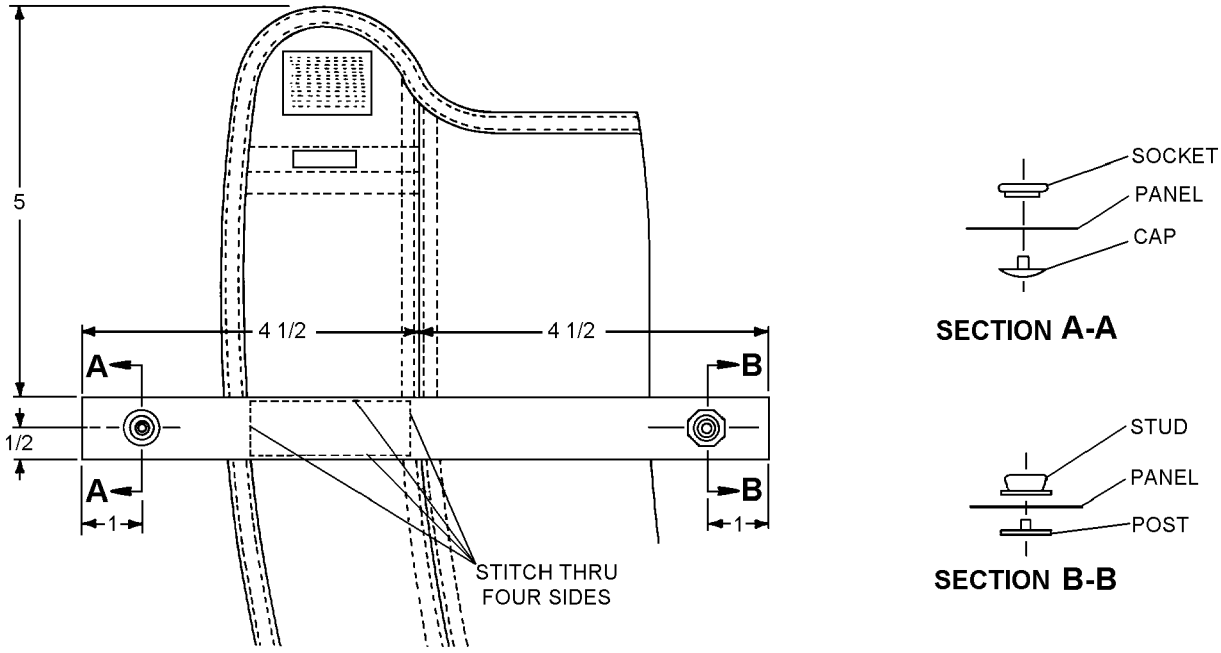

Figure 18-15. Addition of Webbing Loops

18-85. ATTACHMENT PATCH. Procedures for fabrication and installation of the attachment patch are as follows:

1. Spread deflated life preserver on clean flat surface.

2. Fabricate attachment patch using polyurethane coated nylon cloth.

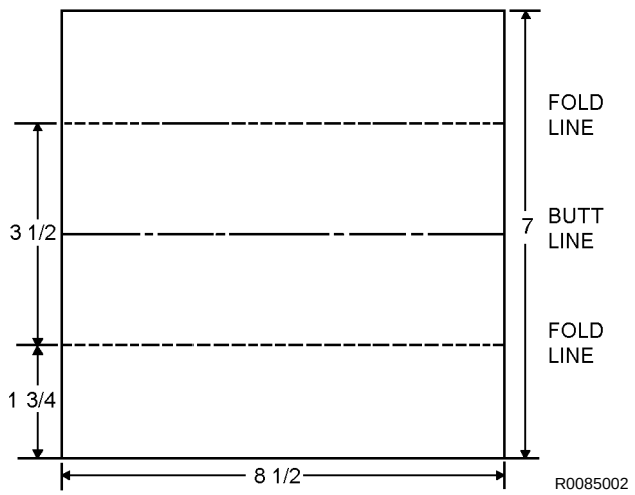

Step 2 - Para 18-85

3. Fold cloth at fold lines, with coated side inside, butt edges together at butt line to form attachment patch 8 1/2 inches by 3 1/2 inches. Crease edges at fold line.

4. Complete the basic attachment patch form by applying polyurethane adhesive to coated side of the patch in accordance with paragraph 18-63, fold and butt together edges as in step 3.

5. Cut two 8 1/2-inch lengths of one-inch V-tape and cement one length on each side of the attachment patch, open V to the outside. Follow cementing procedures in paragraph 18-63 using polyurethane adhesive.

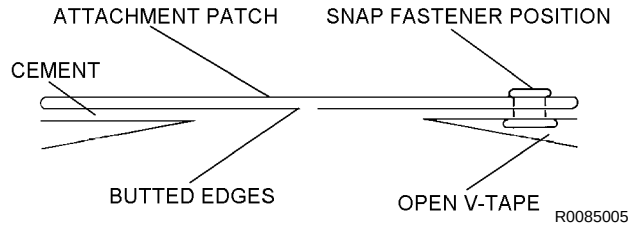

Step 5 - Para 18-85

6. Measure and punch six holes in attachment patch for installation of six uni-directional snap fastener sockets (figure 18-16).

7. Position attachment patch on waist lobe as indicated in figure 18-16 and mark the area on waist lobe. Apply polyurethane adhesive in accordance with paragraph 18-63 and attach the patch to waist lobe.

8. Install six uni-directional snap fastener sockets with dots on buttons oriented to center point of attachment patch (figure 18-16).

18-86. INSTALLATION OF CASING ATTACHMENT PATCH SNAP FASTENER STUDS. Install six uni-directional snap fastener studs in waist lobe casing as follows:

1. Spread casing assembly flat on clean level surface. Hold in flat non-distorted position using thumb tacks or other available means not harmful to fabric.

2. Measure and mark snap fastener positions using dimensions in figure 18-17. Remove restraints from casing.

3. Install six snap fastener studs and eyelets.

18-87. FABRICATION AND INSTALLATION OF LOCKING PIN COVER (LIFE PRESERVERS WITHOUT NO. 3 SPUR GROMMET). Fabricate and install the locking pin cover as follows:

CAUTION

Only Polyurethane adhesives and Polyurethane-coated cloth patches shall be used on Polyurethane-coated life preserver assemblies.

Materials Required

Quantity	Description	Reference Number
1	Socket, Snap Fastener	MS27981-3B
1	Cap, Snap Fastener	MS27981-1B
As Required	Cloth, Nylon Polyurethane-coated, Type I	MIL-C-83489 NIIN 01-335-3129
As Required	Thread, Stitching, Nylon, Type I or II, Size E	V-T-295 NIIN 00-204-3884

Materials Required (Cont)

Quantity	Description	Reference Number
As Required	Tape, Binding, Nylon, 3/4-inch Wide, Sage Green 1551 Type III	MIL-T-5038 NIIN 00-176-8083

1. Cut basic locking pin cover from polyurethane coated nylon cloth in dimensions shown in figure 18-18. Define form of locking pin cover using appropriate end of casing waist lobe assembly as pattern.

2. Reinforce fabric with single row stitching around entire perimeter of locking pin cover.

3. Apply 3/4-inch binding tape to perimeter of cover as shown in figure 18-18.

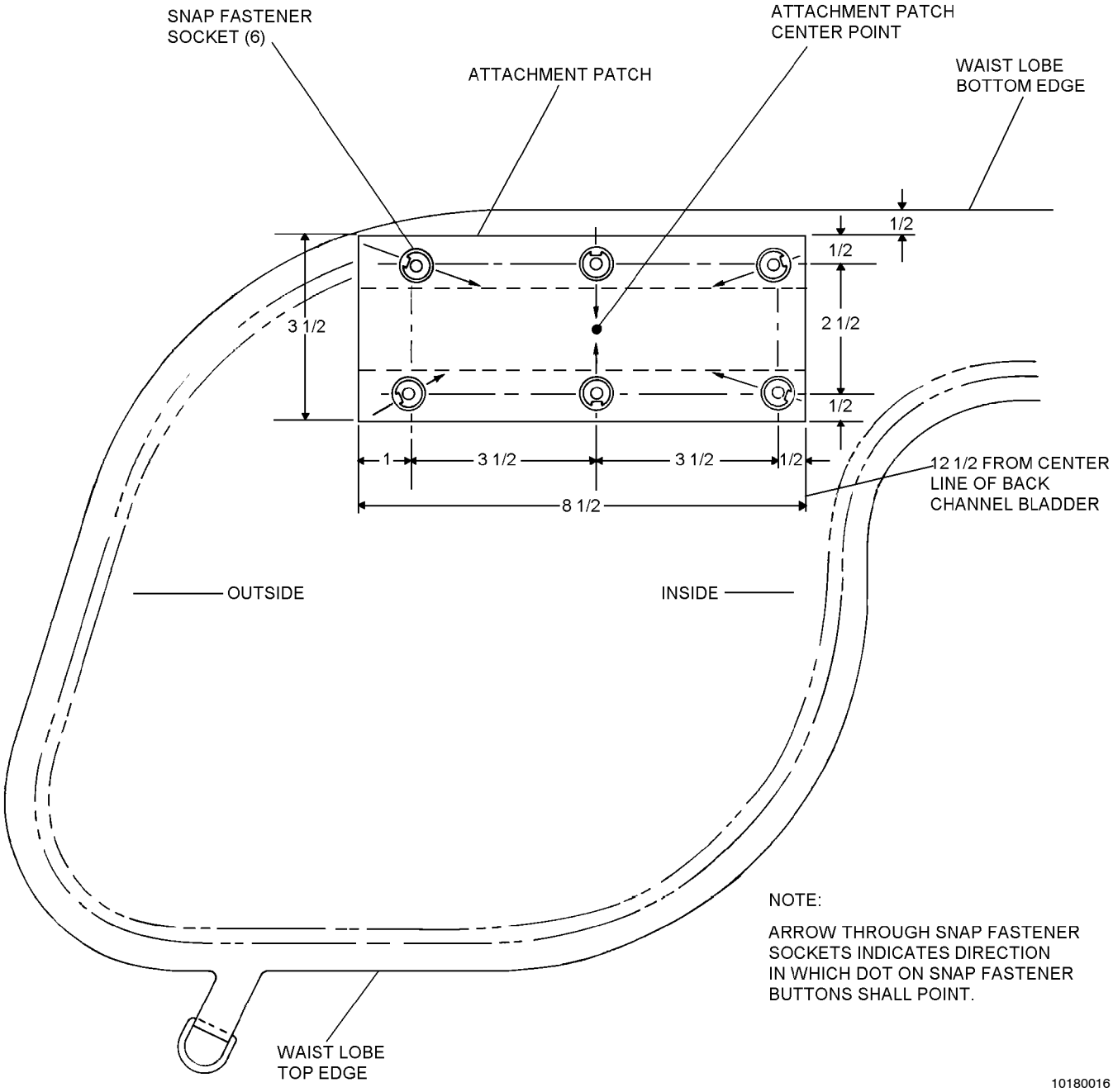

Figure 18-16. Attachment Patch Installation Dimensions

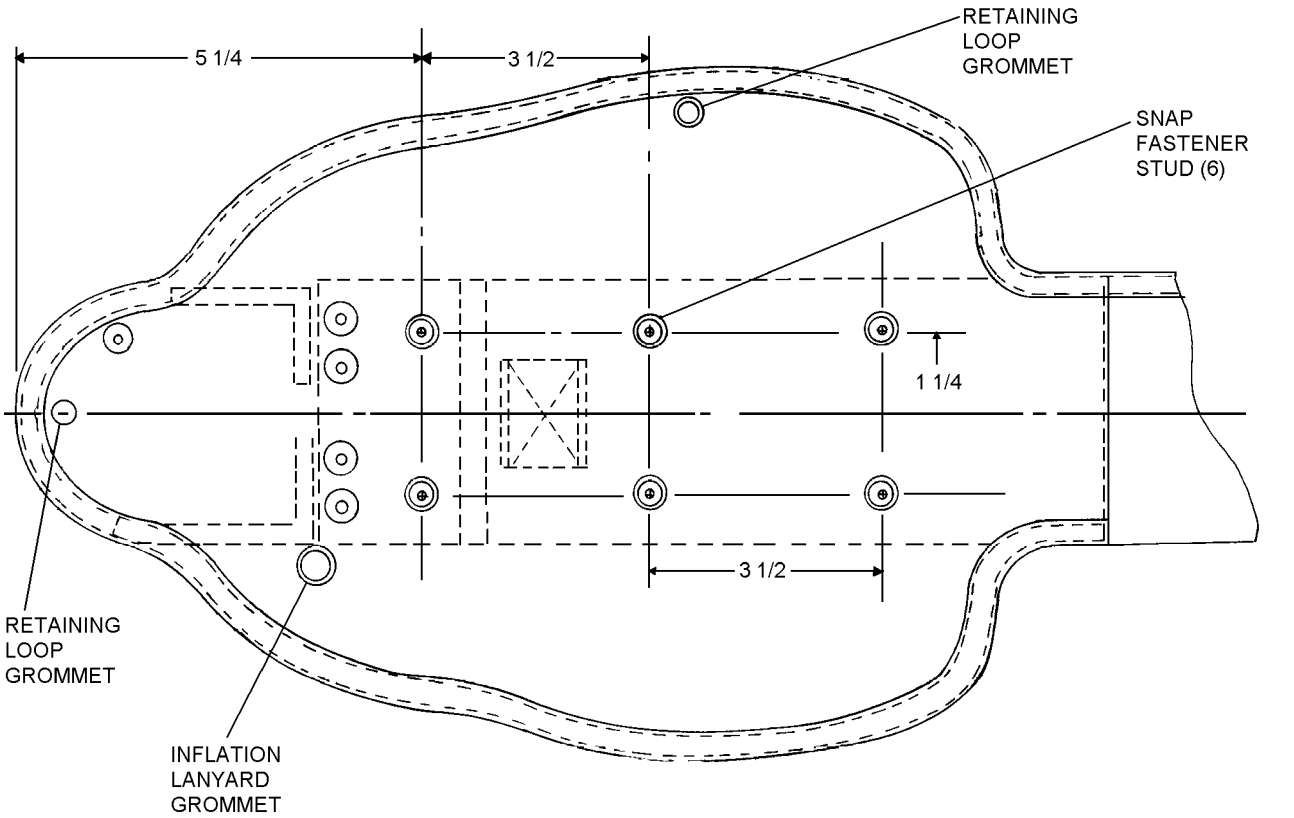

Figure 18-17. Installation Casing Attachment Patch Snap Fastener Studs

4. Align locking pin cover with mating surface of casing assembly and install in accordance with figure 18-19.

NOTE

Binding tape may be in one continuous strip or two sections.

5. Mark snap fastener alignment and install locking pin cover, snap fastener socket and button.

NOTE

When properly aligned with casing assembly, the straight edge of locking pin cover will be butted 1/8-inch from edge of beaded inflation handle snap fastener stud installation (casing main panel subassembly).

18-88. Deleted.

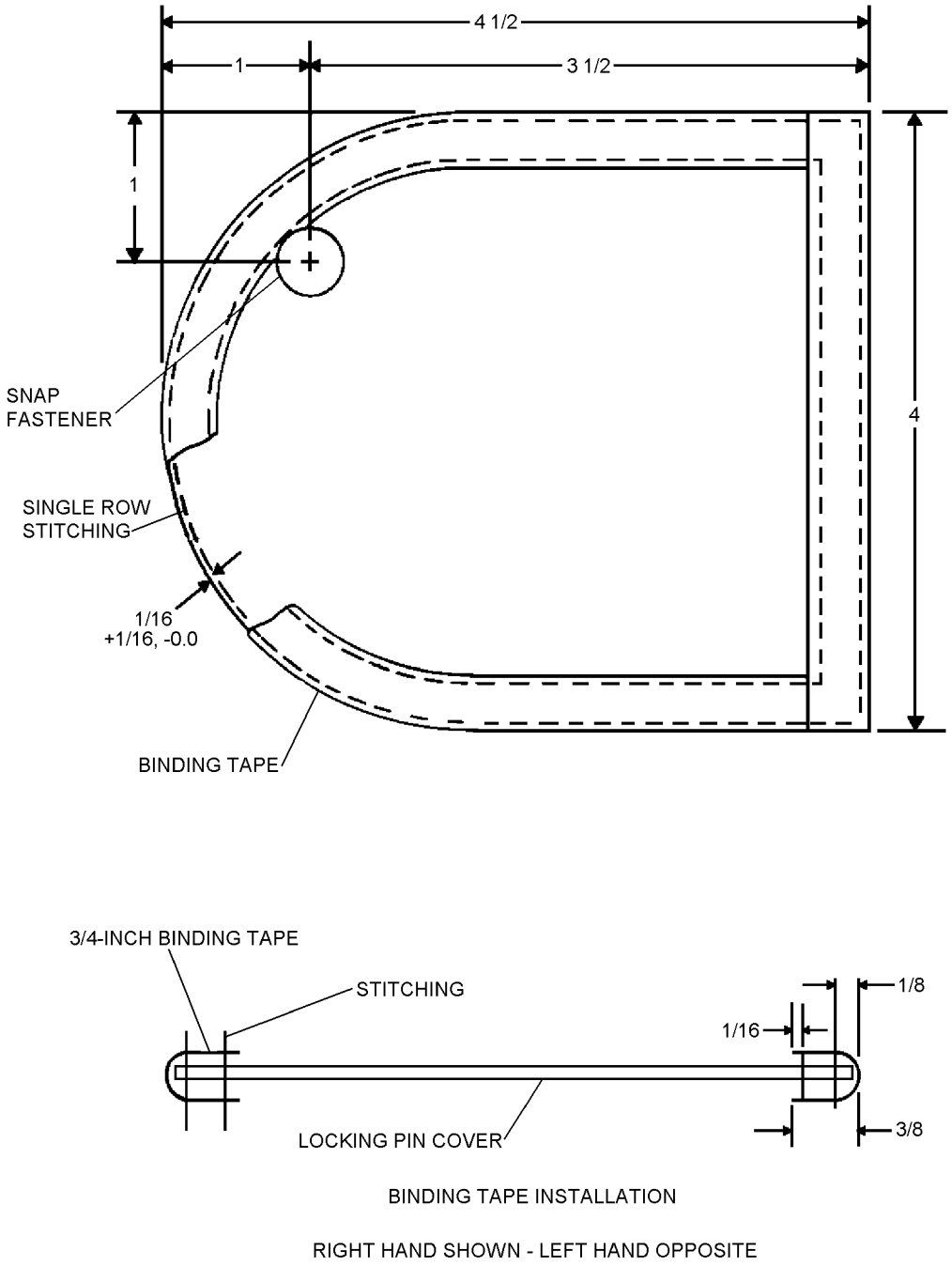

10180018

Figure 18-18. Fabrication of Locking Pin Cover

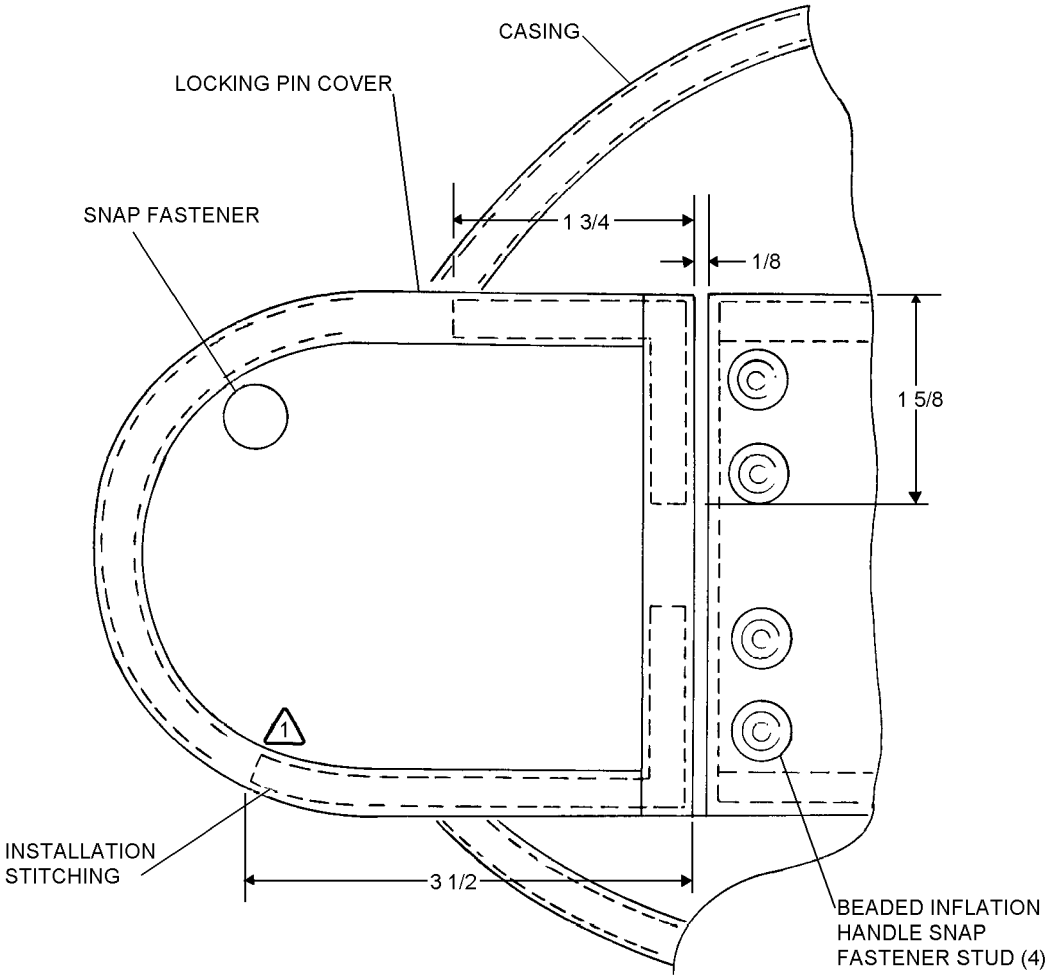

RIGHT HAND SHOWN - LEFT HAND OPPOSITE

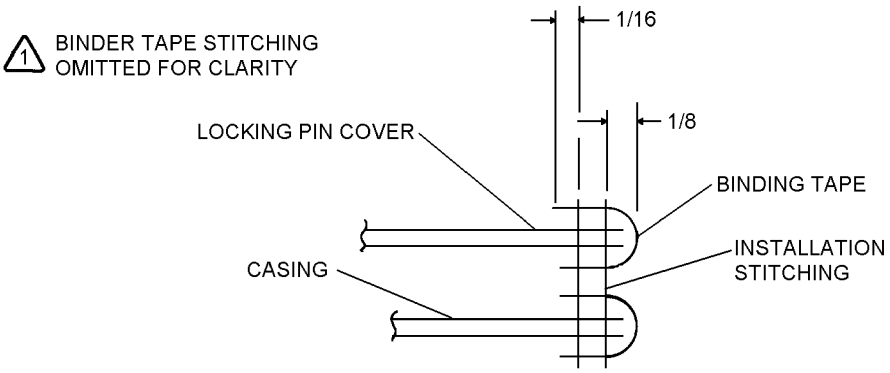

10180019

Figure 18-19. Locking Pin Cover Installation

Figure 18-20 Deleted.

18-89. PACKING PROCEDURES FOR LPU-23C/P LIFE PRESERVER ASSEMBLY.

18-90. The LPU-23C/P shall be packed by qualified personnel at the intermediate maintenance level. For cleaning and servicing procedures, refer to paragraph 18-51.

18-91. To pack the LPU-23C/P life preserver assembly, proceed as follows:

Materials Required

Quantity	Description	Reference Number
As Required	Talc, Technical	MIL-T-50036A NIIN 01-080-9589
As Required	Cord, Nylon Type I	MIL-C-5040 NIIN 00-240-2154
As Required	Thread, Nylon Size A	V-T-295 NIIN 00-204-3884
As Required	Thread Nylon Size E	V-T-295 NIIN 00-204-3884

1. Ensure that life preserver has been inspected in accordance with paragraph 18-25.

2. Prior to packing, ensure that chambers are thoroughly deflated. Ensure all bladder surfaces front and rear are lightly dusted with talc.

3. Oral inflation valves shall be locked by knurled ring and placed in oral inflation valve pocket. Position LPU-23C/P life preserver assembly with collar panel folded down.

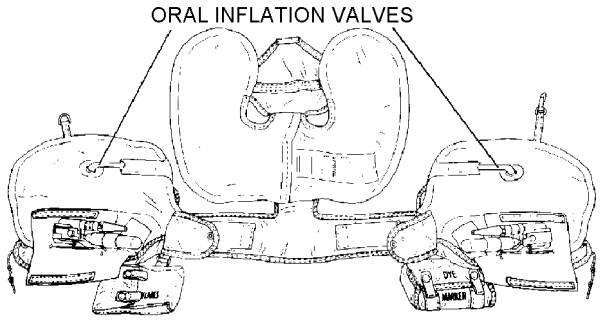

R0091003

Step 3 - Para 18-91

4. Insert collar snaphooks through slots in collar casing and fold collar edge over slots in casing.

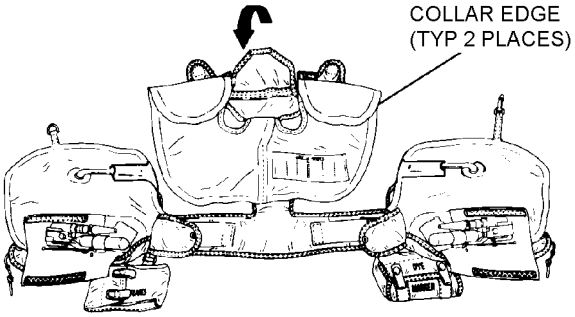

R0091004

Step 4 - Para 18-91

5. Fold over edge of collar panels.

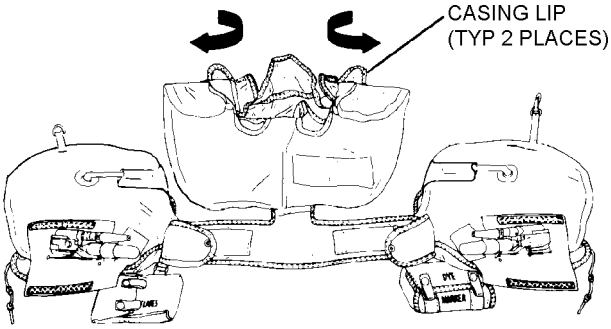

R0091005

Step 5 - Para 18-91

6. Accordion-fold sides of collar lobes into the collar casing.

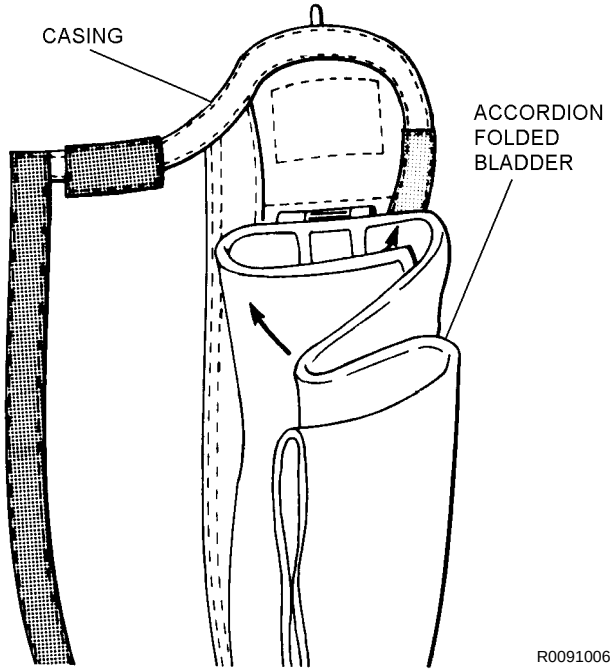

Step 6 - Para 18-91

7. Tuck in casing lip and secure collar casing with hook and pile tape.

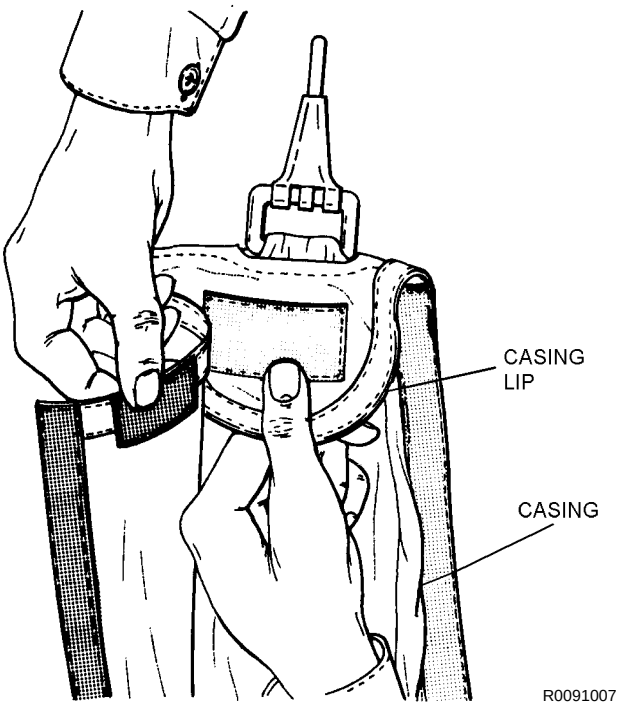

Step 7 - Para 18-91

NOTE

The unsewn 3/8 to 1/2-inch end tab of hook tape located on the front edge of the collar lobe casing shall be attached to the mating pile tape on the collar casing cover.

8. Close collar lobe section by engaging the 3/8 to 1/2-inch unsewn portion of hook pile tape on casing cover.

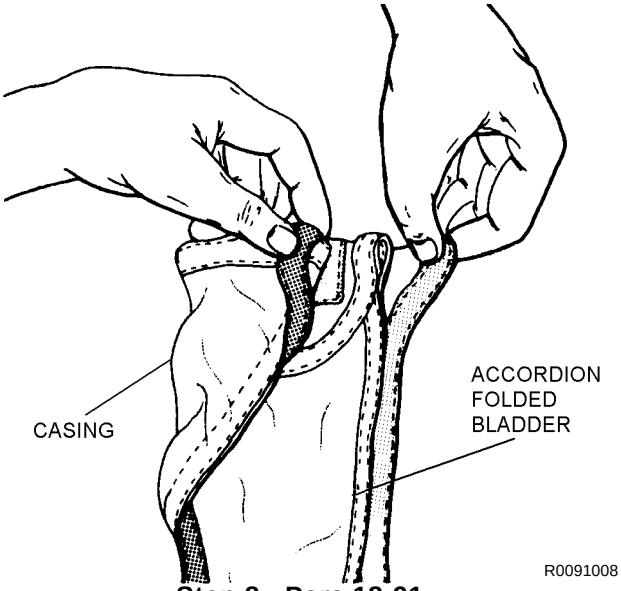

Step 8 - Para 18-91

9. Secure hook and pile tape approximately 8 inches along casing cover edge, securing the accordion-folded bladder within casing cover.

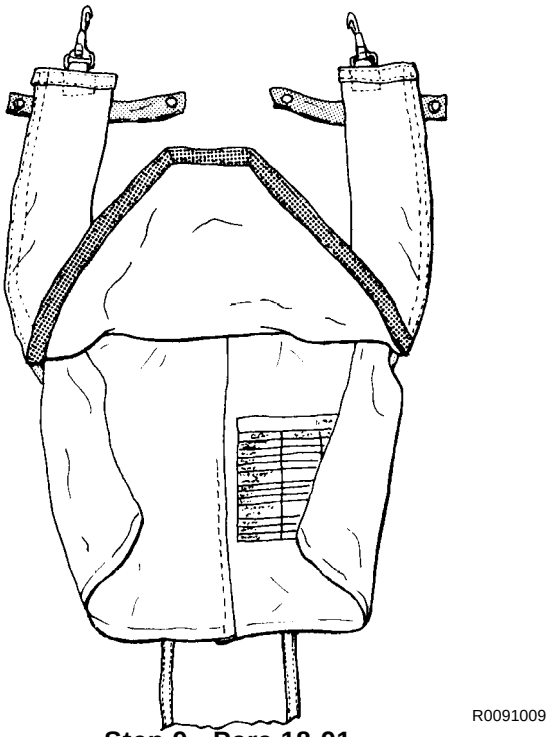

Step 9 - Para 18-91

10. Accordion-fold bottom of collar lobe into collar casing.

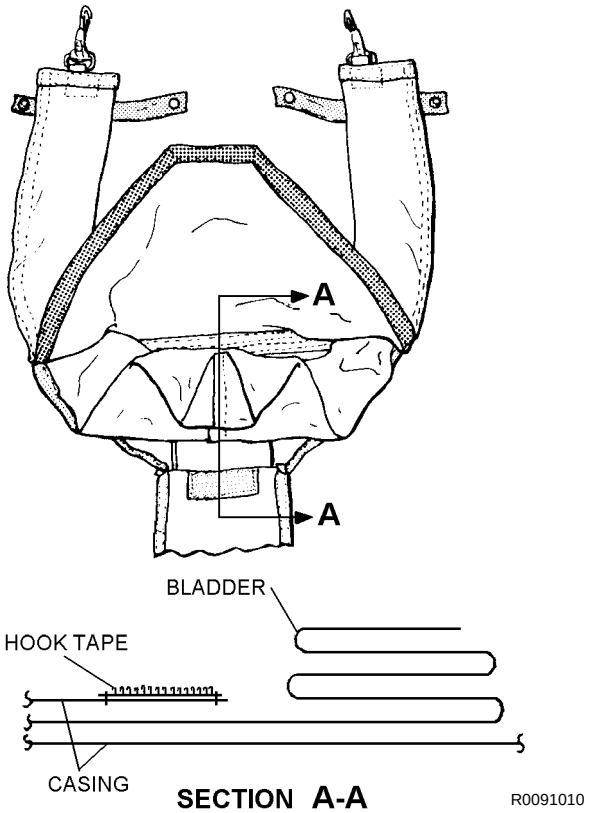

Step 10 - Para 18-91

NOTE

The unsewn 3/8 to 1/2-inch end tab of hook tape located on the rear edges of the collar lobe casing shall be attached to the mating pile tape on the collar casing cover.

11. Continue securing hook and pile tape along casing cover edge and casing lip, ending on unsewn end tabs of hook tape, completely enclosing collar lobe bladder within casing cover. Ensure all hook tape is engaged with pile tape and not exposed.

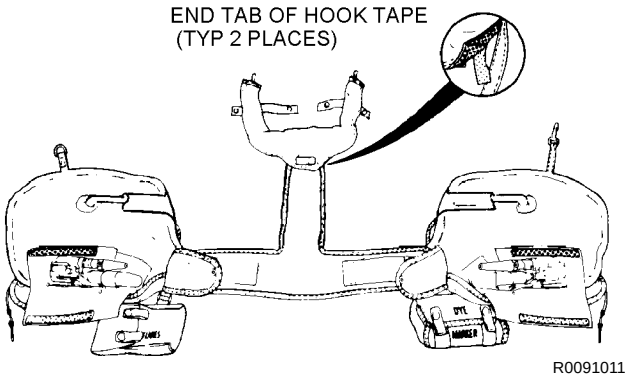

Step 11 - Para 18-91

WARNING

The packaging cord loops of each inflation assembly must be routed under the manual actuating lever, and through the hole in the end of the valve guide arm. See figure 18-13. Rubber bands shall not be used to retain slip-on pockets to D-ring and snaphook fittings.

12. Insert snaphook and D-ring on waist lobes into slip-on pockets.

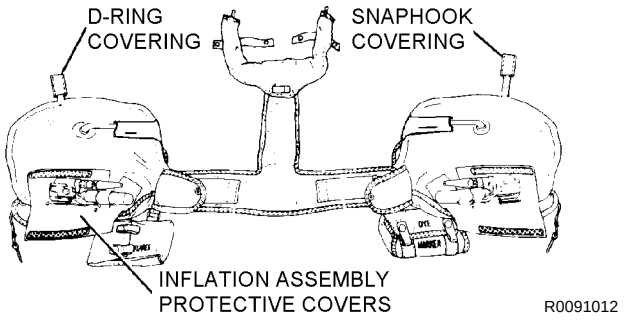

Step 12 - Para 18-91

13. Ensure that beaded handle with inflation lanyard is through 2 1/4-inch slot in protective cover; then route packaging cord loop through 3/8-inch diameter hole in protective cover. Secure protective cover using hook and pile tape.

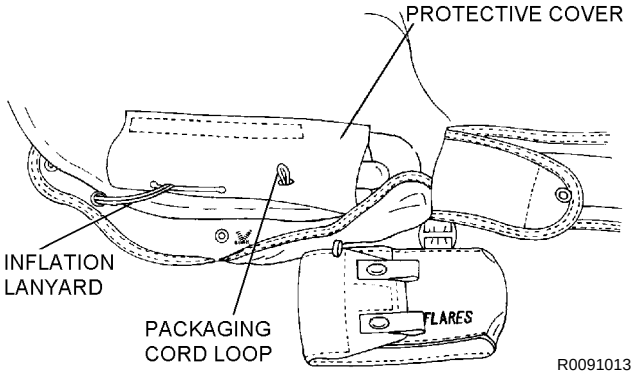

Step 13 - Para 18-91

NOTE

Packing cord shall be used to aid in closing life preserver casing.

14. Insert a 2-foot piece of Type I nylon cord through packaging cord loop extending through hole in protective cover. Insert ends of packing cord through grommet in bottom casing flap. Make first fold in waist lobe by bringing top of lobe over to top edge of protective cover.

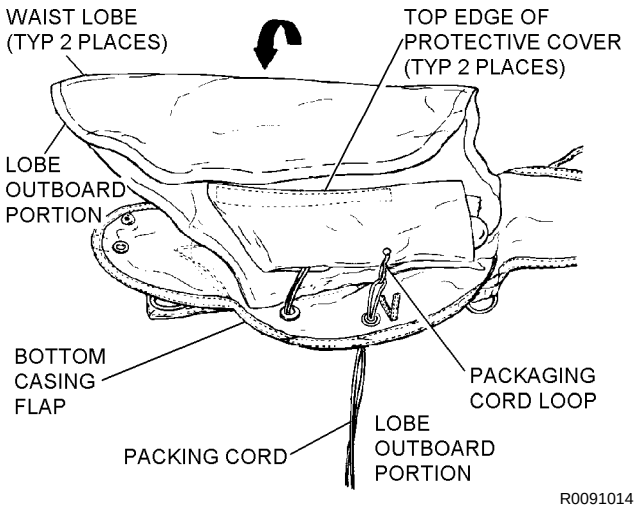

Step 14 - Para 18-91

15. Fold outboard portion of waist lobe in, clearing outboard casing flap.

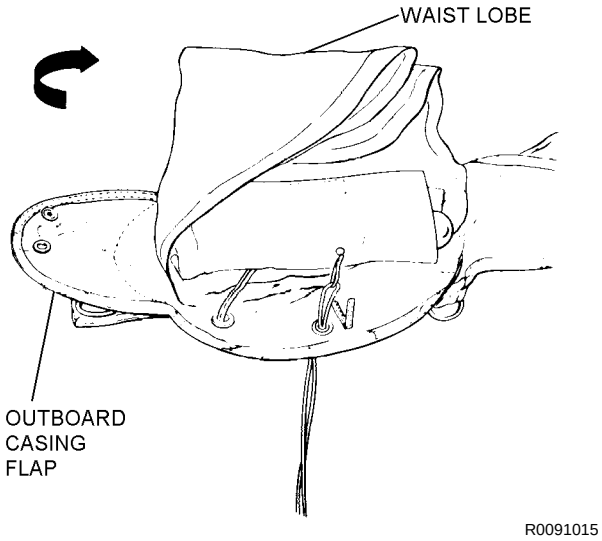

Step 15 - Para 18-91

16. Fold waist lobe over to bottom edge of protective cover.

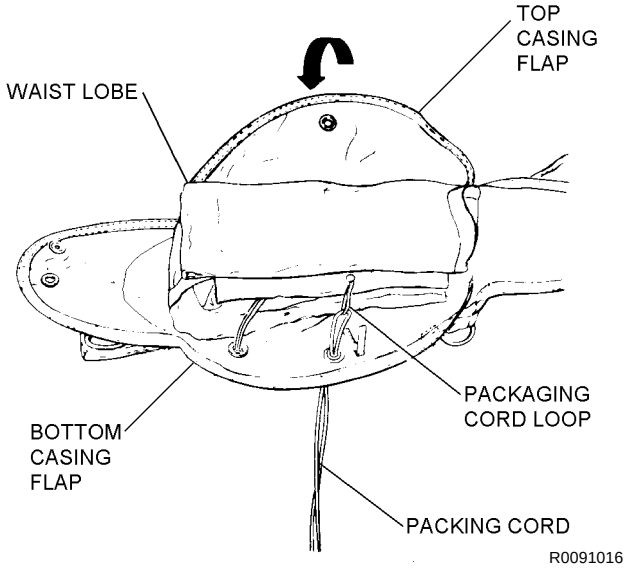

Step 16 - Para 18-91

17. Fold bottom casing flap up, and over folded waist lobe and pass ends of packing cord through grommet in top flap.

18. Fold top casing flap down and over bottom casing flap. Pull packing cord and attached packaging cord loop through grommet in top casing flap.

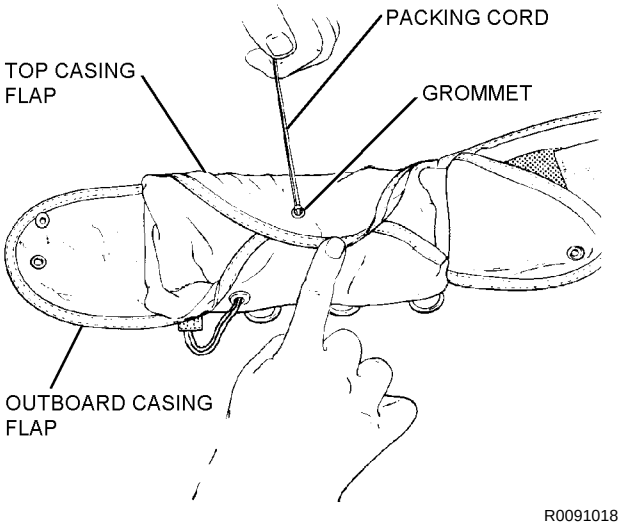

Step 18 - Para 18-91

19. Thread packing cord through inboard casing flap grommet. Pull packaging cord loop through grommet.

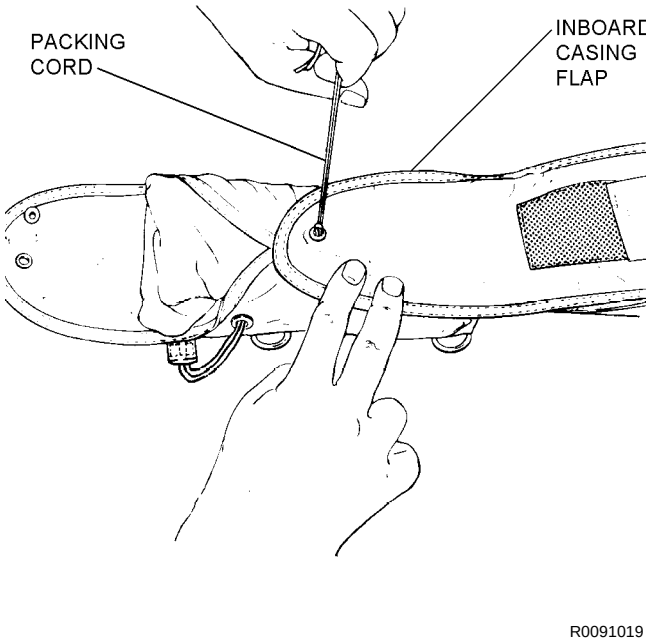

Step 19 - Para 18-91

20. Route locking pin under locking pin cover flap (figure 18-21) grommet.

WARNING

To avoid possible injury when closing casing of right waist lobe, do not place palm of hand on waist closure snaphooks.

21. Fold outboard casing flap over. Pass packing cord through grommets and pull packaging cord loop through grommet far enough to accept locking pin. Insert locking pin through packaging cord loop and into pin keeper loop. Remove packing cord (figure 18-21).

22. Safety-tie eye of locking pin by passing one turn of size A nylon thread through eye of locking pin, around packaging cord loop, then under pin. Safety-tie beaded inflation handle with one turn of size E nylon thread, single. Draw thread sufficiently to permit a 1/2 ± 1/8-inch space between the middle beads and webbing on the preserver. Tie ends of both safety ties with a surgeon's knot followed by a square knot.

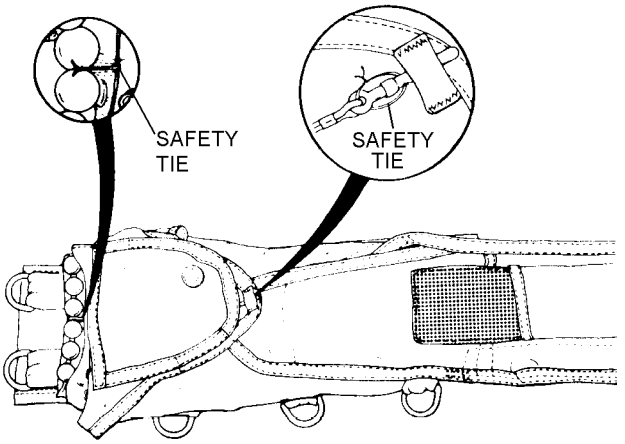

Step 22 - Para 18-91

23. Close locking pin cover flap and secure snap fastener.

NOTE

NAVAIR 13-1-6.5, Rescue and Survival Equipment, contains information on inspection and replacement of survival items.

24. When required, ensure survival items have been inspected for expiration and damage.

NOTE

Each survival item shall be secured to the snap fastener tab of its respective pouch with a 36-inch length (DYE MARKER) or 80-inch length (FLARES) of nylon cord (MIL-C-5040, Type 1). Sear ends of each cord.

25. When required, insert two dye markers into pouch labeled DYE MARKER. Insert two Marine Smoke and Illumination signals into pouch labeled FLARES. Fake excess line and secure with rubber bands.

26. Make necessary entries on appropriate form in accordance with OPNAVINST 4790.2 Series.

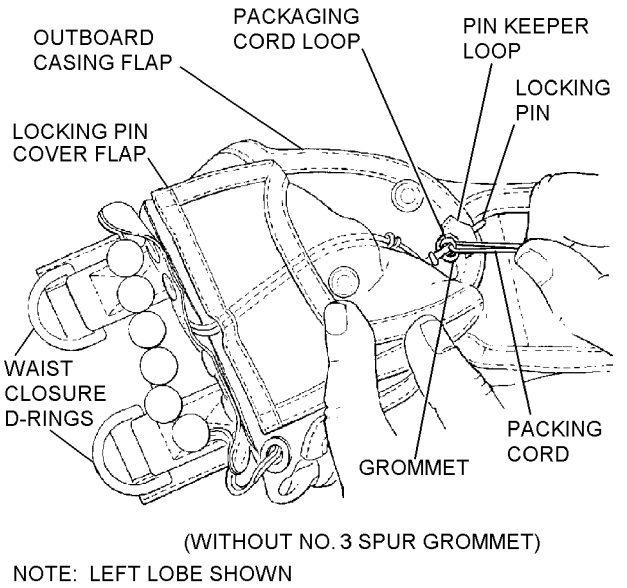

Figure 18-21. Packing LPU-23C/P Life Preserver

Section 18-4. Illustrated Parts Breakdown (IPB)

18-92. GENERAL.

18-93. This section lists and illustrates the assemblies and detail parts of the LPU-23C/P Life Preserver assembly.

18-94. The Illustrated Parts Breakdown should be used during maintenance when requisitioning and identifying parts.

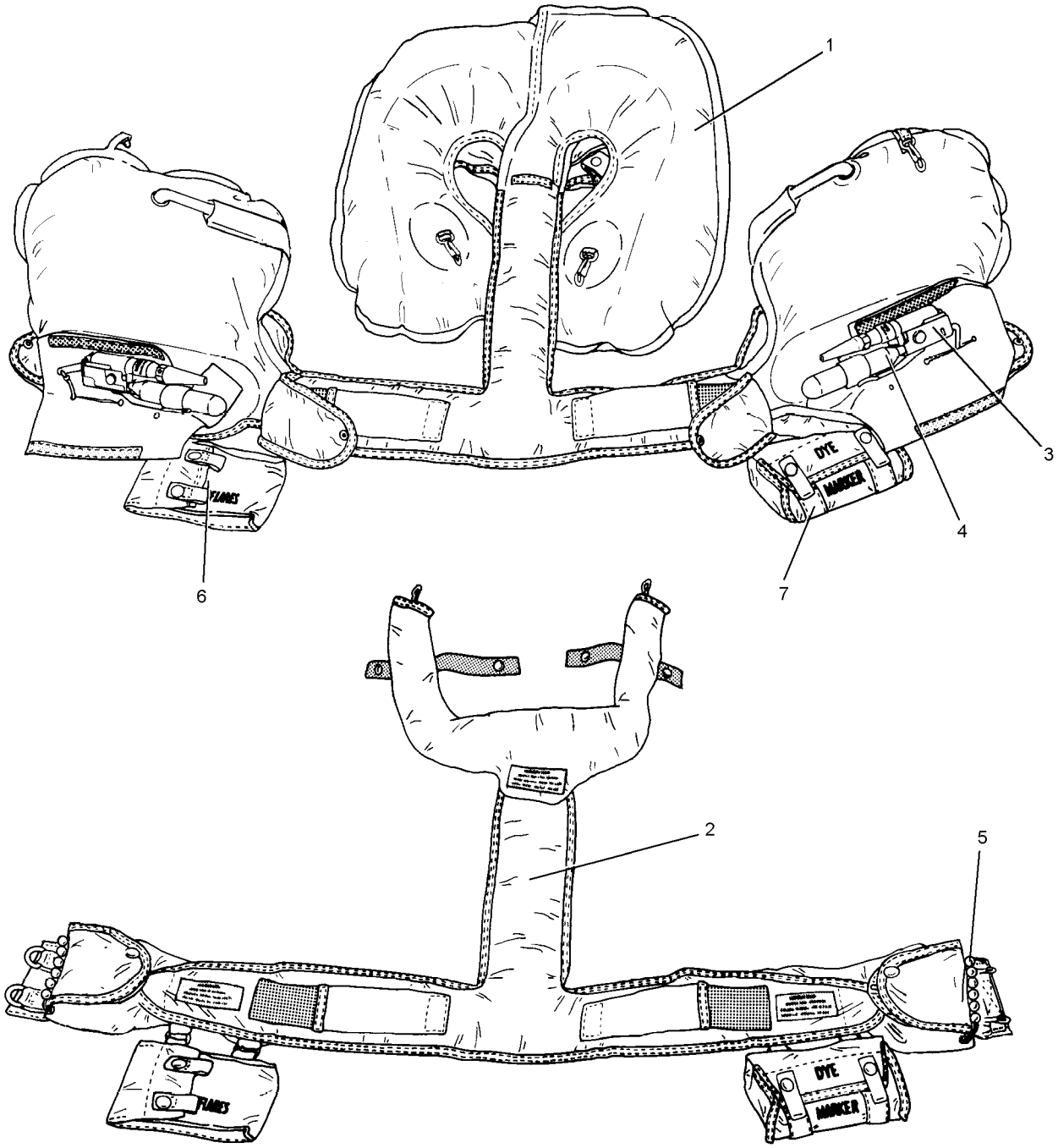

10180022

Figure 18-22. LPU-23C/P Life Preserver Assembly, Illustrated Parts Breakdown

Figure and Index Number	Part Number	Description 1 2 3 4 5 6 7	Units Per Assembly	Usable On Code
18-22	No Number	LPU-23C/P LIFE PRESERVER	REF	
-1	1957AS103-1 (NIIN 01-407-3390)	. INFLATABLE LIFE PRESERVER, ... LPU-23C/P	1	
-2	1957AS104-2 (NIIN 01-399-1270)	. . CASING ASSEMBLY	1	
-3	849AS153 (NIIN 01-364-4089)	. . INFLATION ASSEMBLY, FLU-8B/P . . . . . (30003)	2	
	849AS103	. . . BATTERY, 6-Volt, Manganese Dioxide	4	
	1122-095	. . . SLEEVE, Battery Insulating (Note 3)	1	
	1813-044-02	. . . SENSOR PLUG CAP, FLU-8B/P . . . . . (03688)	2	
	105AS100-3	. . . GASKET, Top (30003) (Note 1)	2	
	105AS100-4	. . . GASKET, Bottom (30003) (Note 1)	2	
	NIIN 01-046-3300	. . . SEAT SEAL, O-Ring, Multi	2	
	1138-003-01	. . . PACKAGING CORD LOOP	2	
-4	MIL-C-25369 (NIIN 01-077-8773)	. . . CO_2 CYLINDER, Type III, 35 Gram	2	
-5	975AS121-11 (NIIN 01-120-4752)	. . . BEADED INFLATION HANDLE, ... Type I	2	
-6	68A73D3-61	. . FLARE POUCH ASSEMBLY (30003) . . . . . (Note 2)	1	
-7	68A73D2-41	. . DYE MARKER POUCH ASSEMBLY . . . . . (30003) (Note 2)	1	

Notes:
1. Top and bottom gaskets are obtained from Valve Stem Kit, P/N 105AS100-6, NIIN 00-113-8290, which contains one top and one bottom gasket.
2. Optional equipment at the discretion of the Squadron Commander.
3. The battery insulating sleeve is not a stocked item. After installation directed by Aircrew Systems Bulletin 976, it becomes part of the FLU-8B/P Unit. Replacement sleeves are issued by Indian Head Division, NSWC.

NUMERICAL INDEX

Part Number	Figure and Index Number	SM&R Code
MIL-C-25369	18-22-4	PAGZZ
NIIN 01-046-3300	18-22-3	
105AS100-3	18-22-3	
105AS100-4	18-22-3	
1122-095	18-22-3	
1138-003-01	18-22-3	PA--Z
1618-012-01	18-22-3	PA--Z
1813-044-02	18-22-3	

Part Number	Figure and Index Number	SM&R Code
1957AS103-1	18-22-1	PAOGG
1957AS104-2	18-22-2	
68A73D2-41	18-22-7	PAGZZ
68A73D3-61	18-22-6	PAGZZ
849AS103	18-22-3	PA--Z
849AS153	18-22-3	PA--Z
975AS121-11	18-22-5	PAGZZ

CHAPTER 19

DELETED

THIS PAGE INTENTIONALLY LEFT BLANK.

CHAPTER 20

LPP-1 AND -1A LIFE PRESERVER ASSEMBLIES

Section 20-1. Description

20-1. GENERAL.

WARNING

The LPP-1, -1A life preserver assembly is not suitable for use by small children in Naval aircraft.

20-2. The LPP-1, -1A life preserver assembly is authorized for use by passengers in cargo or transport type aircraft, fixed or rotary wing, for sea survival situations.

20-3. CONFIGURATION.

NOTE

The LPP-1 and LPP-1A life preserver assemblies are identical with the exception of the mechanical inflation assembly. Orange storage container assemblies are optional equipment.

20-4. The LPP-1, -1A life preserver assembly (see figure 20-1) weighs approximately 3 pounds and provides a minimum of 29 pounds of buoyancy. The LPP-1, -1A life preserver assembly consists of a single-compartment yoke-type flotation assembly, a pouch and belt assembly, an inflation assembly and a storage container. Survival items are also provided. To make up the LPP-1, -1A life preserver assembly, all required components not supplied with the preserver must be individually requisitioned. See table 20-1 for survival items.

CAUTION

Use only Polychloroprene adhesives and Polychloroprene-coated cloth and patches on Polychloroprene-coated LPP-1, -1A life preserver assemblies.

20-5. The flotation assembly is constructed of polychloroprene-coated nylon cloth. It is equipped with an oral inflation valve, a valve stem, survivor locator light attachments, a whistle pocket, a belt loop and an inspection record patch. See figure 20-1.

Table 20-1. LPP-1, -1A Survival Items

Description	Quantity Required	Reference Number	NIIN	SM&R Code
Whistle, Type II	1	MIL-W-1053	00-254-8803	PAOZZ
Survivor Locator Light Assembly	1	68A94C14-1 (CAGE 30003)	00-142-5218	PAOZZ
Dye Marker	1	MIL-S-17980 (CAGE 81349)	00-270-9986	PAOZZ

Notes: 1. The Passenger Helicopter Aircrew Breathing Device System (PHABD) is authorized for use on the LPP-1 and 1A for Marine troop passengers during flights over water. Refer to NAVAIR 13-1-6.5 for attachment and maintenance procedures.

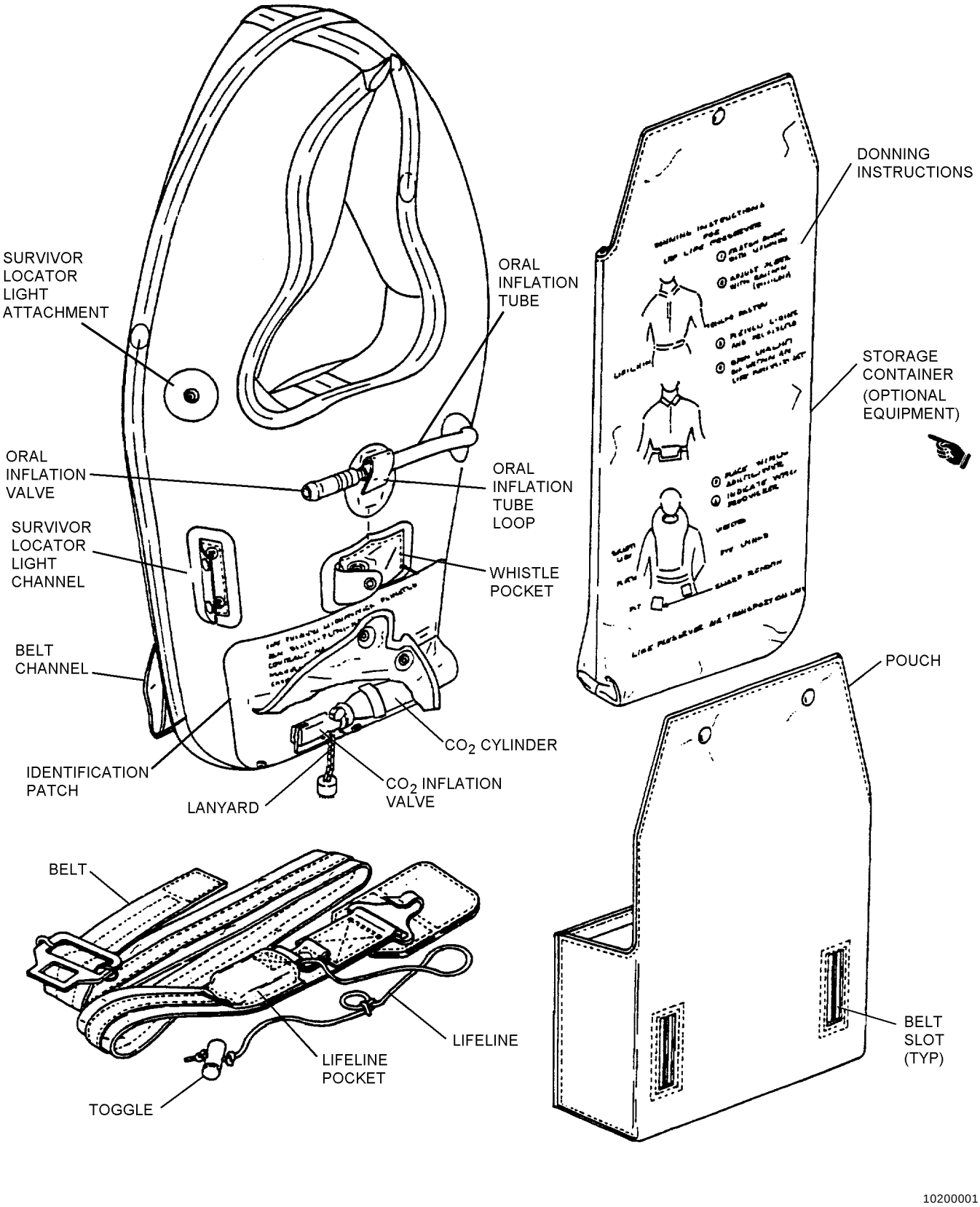

Figure 20-1. LPP-1 and -1A Life Preserver Assemblies

20-6. The pouch and belt assembly consists of a rubber-coated nylon cloth pouch and an adjustable belt. The pouch contains the flotation assembly and survival items. The belt consists of a 53-inch piece of webbing, an adjustable buckle and clasp, a toggle assembly and a toggle assembly pocket. The belt adjusts from a waist size of 30 to 52 inches and attaches the flotation assembly and pouch to the wearer by means of the belt loop on the flotation assembly and the slots in the back of the pouch. The toggle assembly consists of a wooden toggle and line and is used to secure survivors together while they are in the water. When not in use, the toggle line is around the wooden toggle and stowed in a pocket located on the belt. See figure 20-1.

20-7. The LPP-1 inflation assembly consists of a Type I (MIL-C-25369), 25- to 28-gram CO_2 cylinder and an inflation valve (SAF-T-PAK). The LPP-1A inflation assembly consists of a Type II (MIL-C-25369), 28- to 31-gram CO_2 cylinder and an inflation valve (MIL-I-25370). The inflation assembly is connected to the valve stem on the front of the flotation assembly. The valve stem is equipped with a check valve which prevents leakage.

20-8. The storage container is used to store the life preserver assembly when it is not in use. It also has donning instructions printed on it. The storage container is considered optional equipment.

20-9. APPLICATION.

20-10. The LPP-1 and LPP-1A life preserver assemblies are used by passengers in transport or cargo aircraft, rotary or fixed wing. The LPU-32/P is an authorized substitute for the LPP-1, -1A life preserver assembly.

20-11. FUNCTION.

20-12. The LPP-1, -1A is manually inflated by pulling the inflation assembly lanyard down. Emergency use of the survival items shall be as required. In an emergency situation, the oral inflation valve should be used to top-off an inflated preserver, maintain inflation of a leaky preserver or to inflate a preserver when the inflation assembly malfunctions or fails. The oral inflation valve is also used to inflate a preserver with air during an inspection test and to deflate a preserver in preparation for packing.

20-13. DONNING PROCEDURE.

20-14. To don the LPP-1, -1A life preserver, refer to figure 20-2.

NOTE

The pouch must be opened and the flotation assembly unrolled prior to inflation through the oral inflation valve or via the carbon dioxide inflation assembly.

DONNING INSTRUCTIONS FOR LPP-1, -1A LIFE PRESERVERS

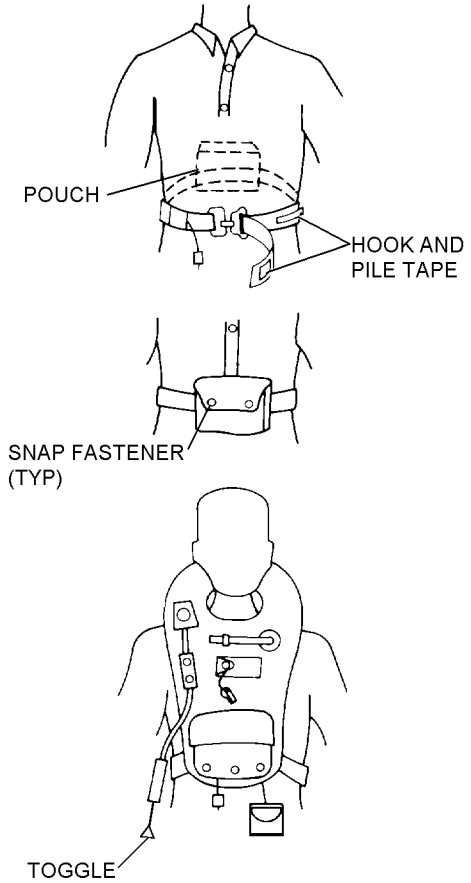

1. REMOVE PRESERVER FROM STORAGE CONTAINER.
2. FASTEN BELT ADAPTERS IN FRONT WITH POUCH IN REAR.
3. ADJUST BELT TO SIZE. SECURE EXCESS BELT BY MATING HOOK AND PILE TAPE.
4. ROTATE POUCH TO FRONT AND READJUST BELT.
5. OPEN SNAP FASTENERS ON POUCH AND UNFOLD LIFE PRESERVER.
6. PLACE DEFLATED PRESERVER OVERHEAD.
7. PLACE THIS STORAGE CONTAINER INTO POUCH AFTER DONNING LIFE PRESERVER.
8. LIFT LOWER END OF PRESERVER OUT OF POUCH.
9. INFLATE PRESERVER BY PULLING TOGGLE DOWN.

10200002

Figure 20-2. Donning Procedure

Section 20-2. Modifications

20-15. GENERAL.

20-16. There are no authorized modifications to the LPP-1, -1A life preserver at this time. Common repairs and fabrication instructions to maintain serviceability can be found in table 20-2.

Table 20-2. LPP-1 or -1A Common Repairs and Fabrications

Description of Repair or Fabrication	Paragraph Number
Determination of Repairability	20-51
Cementing Life Preserver	20-52
Patching Life Preserver	20-53
Replacement of Oral Inflation Valve	20-55
Recementing of LPP-1, -1A Bladder Seams	20-56
Replacement of LPP-1 Lanyard Cord	20-57
Replacement of LPP-1A Lanyard Cord	20-58
Replacement of Defective Plastic Snap Fasteners with Metal Snap Fasteners	20-59
Fabrication of Survivor's Light Attachment Pocket	20-60
Repair of Corroded CO_2 Valve	20-61
Replacement of Top and Bottom Gaskets	20-62
Replacement of Check Valve Assembly	20-63
Fabrication of Lifeline and Toggle Assembly	20-64

Section 20-3. Maintenance

20-17. GENERAL.

20-18. This section contains information on inspection, disassembly, repair/replacement, testing, and reassembly of the LPP-1, -1A life preserver.

20-19. INSPECTION.

20-20. All life preservers shall be subjected to Preflight, Special and Calendar/Phase Inspections.

20-21. The Preflight Inspection shall be performed on life preservers prior to each flight by the aircrewmember to whom the life preserver is assigned. The Preflight Inspection shall be performed on life preservers installed in aircraft prior to each flight by assigned aircrewmembers.

20-22. The Special Inspection shall be performed on all aircraft installed life preservers at intervals not to exceed 30 days. The inspection shall be performed at the organizational level of maintenance by personnel assigned to the Aviator's Equipment Branch.

20-23. Upon completion of the inspection, make necessary entries on the appropriate form in accordance with OPNAVINST 4790.2 Series. The 30-Day Special Inspection may be recorded on a separate history card from the history card recording Calendar/Phase Inspections, functional checks, and modifications.

20-24. The Calendar/Phase Inspection shall be performed on all life preservers prior to placing in service. The Inspection cycle thereafter shall be as follows: personal issue life preservers shall be inspected once every 90 days. Aircraft-installed life preserver inspection shall coincide with the inspection cycle of the aircraft in which installed. See applicable Planned Maintenance System (PMS) publications for specific intervals. In no case shall the interval exceed 231 days. Unless operational requirements demand otherwise, the life preserver Calendar/Phase Inspection shall be performed by the intermediate level of maintenance or above. The functional test shall be performed prior to placing in service, every fourth inspection cycle thereafter, and whenever an inflation assembly is replaced. The leakage test shall be performed during every inspection cycle. If inspection indicates damage, complete appropriate forms in accordance with OPNAVINST 4790.2 Series and forward entire assembly to supply. Refer to paragraph 20-51 for determination of repairability.

20-25. QUALITY ASSURANCE. Properly detailed procedures present a logical sequence for the inspection process. The more critical procedures are underlined to designate steps which require a Quality Assurance inspection to assure performance of specific requirements. After the underlined step is performed by the Aircrew Survival Equipmentman, the procedure shall be verified before the next step is performed. This verification shall be performed by a Collateral Duty Inspector or Quality Assurance Representative (CDI, CDQAR, or QAR). Work Center supervisors are primarily responsible for quality assurance within their centers. OPNAVINST 4790.2 Series permits supervisors to nominate their more experienced personnel to serve as quality assurance inspectors. Nominated personnel shall be screened and examined by the Quality Assurance Officer prior to their designation as Quality Assurance Inspectors or Quality Assurance Representatives by the Commanding Officer. Under no circumstances shall an Aircrew Survival Equipmentman perform his own quality assurance inspection.

20-26. PREFLIGHT/SPECIAL INSPECTION. To perform a Preflight/Special Inspection, proceed as follows:

WARNING

Ensure that the inflation pull toggle is readily accessible. The pull toggle shall extend from the protective cover flap.

CAUTION

Do not open any sealed or safety-wired/safety tied portions of preserver for Preflight/Special Inspection.

1. Inspect exposed metal parts for corrosion and damage.

2. Inspect inflation assembly for presence of safety wire and CO_2 cylinders.

3. Inspect seams and harness for wear, snags, tears and abrasions.

4. Inspect for presence, security of attachment and, if applicable, operation.

5. If any discrepancy is noted, the preserver shall be removed from service and repaired in accordance with procedures in this volume.

20-27. ACCEPTANCE/CALENDAR/PHASE INSPECTION. The Acceptance/Calendar/Phase Inspection consists of the following tasks:

1. Inflation Pull Toggle Inspection

2. Case, Container/Pouch Inspection

3. Functional Test (every fourth inspection cycle)

4. Visual Inspection

5. Life Preserver Configuration

6. General Inspection

7. Markings Inspection

8. Survival Items Inspection

9. Inflation Assembly Inspection

10. Inflation Lanyard Inspection

11. Leakage Test

12. Records Updating

20-28. INFLATION PULL TOGGLE INSPECTION. Inspect inflation pull toggle for the following:

1. Attachment of inflation lanyard to toggle.

2. Cuts, tears, deterioration, abrasion, stains, and general cleanliness of inflation lanyard.

3. Cracked or broken pull toggle.

20-29. CASE, CONTAINER/POUCH INSPECTION. To inspect cases, containers, and/or pouches, proceed as follows:

1. Inspect fabric for cuts, tears, deterioration, abrasion, stains, and general cleanliness.

2. Inspect seams for proper adhesion or stitching.

3. Inspect straps and loops for security and wear.

4. Inspect any other parts for wear, damage, and security.

5. All hardware for security of attachment, corrosion, damage, wear and, if applicable, ease of operation.

6. Inspect snap fastener assemblies for presence, security of attachment, ease of operation, corrosion, and wear.

NOTE

All uni-directional snap fasteners shall be installed with the dot on the button of the snap fastener socket positioned on the side of the snap fastener to which lift must be applied to disengage the socket from the snap fastener stud.

7. If any discrepancies are found, the case, container, or pouch shall be repaired or removed from service as deemed appropriate by the inspection activity.

20-30. FUNCTIONAL TEST. To perform a functional test, proceed as follows:

CAUTION

Ensure area surrounding preserver is free of foreign objects.

1. Open pouch and unroll flotation assembly.

2. Actuate inflation assembly.

3. The preserver shall fully inflate to design shape, without evidence of restriction, in less than 30 seconds.

4. If preserver does not properly inflate, determine cause. Ensure stem and valve are clean and free of foreign matter.

5. If correction is made, the preserver shall be functionally tested again.

6. Deflate preserver in accordance with paragraph 20-31 to remove all CO_2.

20-31. DEFLATION. To deflate a life preserver, proceed as follows:

Support Equipment Required

Quantity	Description	Reference Number
1	Pump, Rotary Vacuum (or equivalent)	NIIN 00-052-5015 (90567)
As Required	Hose, 3/8- or 1/2-inch Inside Diameter Rubber	—

1. Attach one end of rubber hose to vacuum pump.

2. Deflate through oral inflation valves. Unlock oral inflation valve, hold in open position, and hold vacuum pump hose against end of oral inflation valve. When compartment is collapsed, release oral inflation valve. Screw lock closed.

20-32. VISUAL INSPECTION. Prior to visually inspecting a life preserver assembly, the life preserver shall be inflated with air to 1.0 psig.

CAUTION

Remove all carbon dioxide cylinders prior to inflating life preserver with air.

NOTE

If suitable air source is not available, water-pumped nitrogen (BB-N-411) may be substituted.

20-33. LIFE PRESERVER CONFIGURATION. The life preserver shall be configured by comparing it to figure 20-1 and Section 20-4.

20-34. GENERAL INSPECTION. Examine life preservers for the following:

1. Preserver fabric for cuts, tears, punctures, deterioration and abrasion. Refer to paragraph 20-53 for repair instructions.

2. Seam tapes for proper adhesion. Refer to paragraph 20-56 for repair instructions.

3. Valve inlet stems for security.

4. Oral inflation valve(s) for cracks, security, ease of operation, and corrosion.

5. Patches for proper adhesion and wear. Refer to paragraph 20-53 for repair instructions.

6. Any other parts for wear or other damage.

7. All hardware for security of attachment, corrosion, damage, wear and, if applicable, ease of operation.

8. Preservers for stains, dirt, and general cleanliness. Refer to paragraph 20-43 for cleaning instructions.

9. Cross threading and/or loose manifold nuts.

20-35. MARKINGS INSPECTION. To inspect and restore marking, proceed as follows:

Materials Required

Quantity	Description	Reference Number
As Required	Ink, Marking, Laundry, Black	SPE-92 NIIN 00-161-4229
	-or-	
As Required	Ink, Drawing, Waterproof, Yellow	A-A-59291 NIIN 00-634-6583

NOTE

Storage container assemblies P/N 36D1340-1 and 68A94D11-1 are optional equipment and may not be available for markings inspection.

1. Compare markings on preserver to those listed in table 20-3 or 20-4.

2. Restore any faded markings.

3. Deleted.

4. Correct any markings which do not agree with the applicable table. Paint out old marking and enter new marking as close to proper position as possible.

20-36. SURVIVAL ITEMS INSPECTION. To inspect survival items, proceed as follows:

1. Inventory all items by checking items against table 20-1.

NOTE

NAVAIR 13-1-6.5, Rescue and Survival Equipment contains detailed information on the inspection of survival items.

2. Inspect all items for damage, spent contents and expired service life. Replace as necessary.

NOTE

Do not attempt to replace bulb or battery of salt water activated lights on LPP-1, 1A life preservers. Replace entire assembly. Replacement parts are not stocked.

3. Operate all items which are not intended for one-time use. Replace as necessary.

Table 20-3. LPP-1 Life Preserver Markings

Marking (Note 1)	Location	Letter Height
DONNING INSTRUCTIONS FOR LPP-1 LIFE PRESERVER 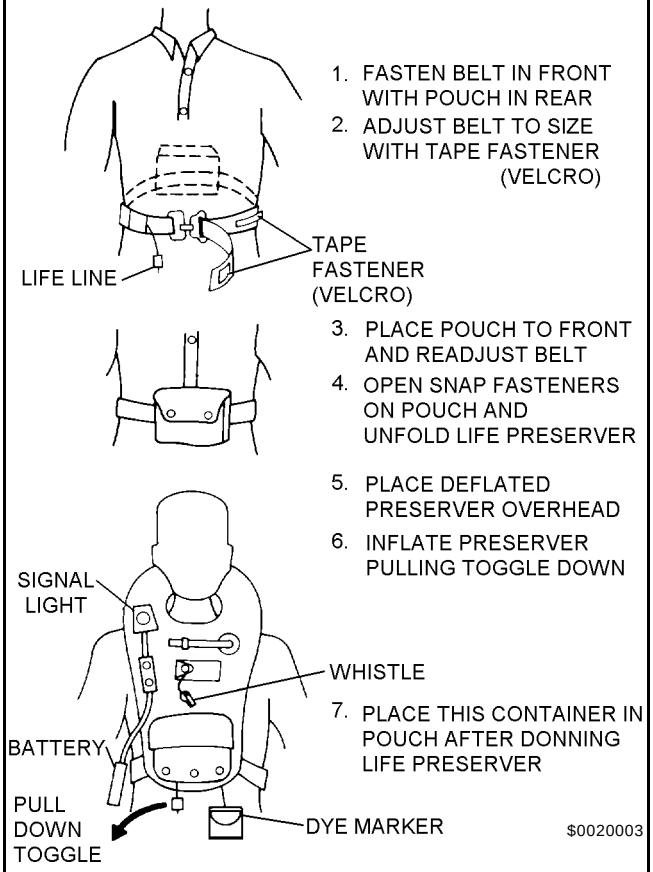 	Front of storage container	1/4 inch 1/8 inch
LIFE PRESERVER, PASSENGER, AIR TRANSPORT TYPE LPP-1 STOCK NO. [applicable number] STOCK NO. [applicable number] MANUFACTURER [name of manufacturer] SERIAL NO. [applicable number]	Front of storage container	1/4 inch
LIFE PRESERVER, PASSENGER, AIR TRANSPORT TYPE LPP-1A FSN: [applicable number] SERIAL NO. [applicable number]	Front of flotation tube below whistle pocket	3/8 inch container

Note: Replacement markings shall be stamped or stenciled using waterproof black ink.

Table 20-4. LPP-1A Life Preserver Markings

Marking (Note 1)	Location	Letter Height
DONNING INSTRUCTIONS FOR LPP-1A LIFE PRESERVER 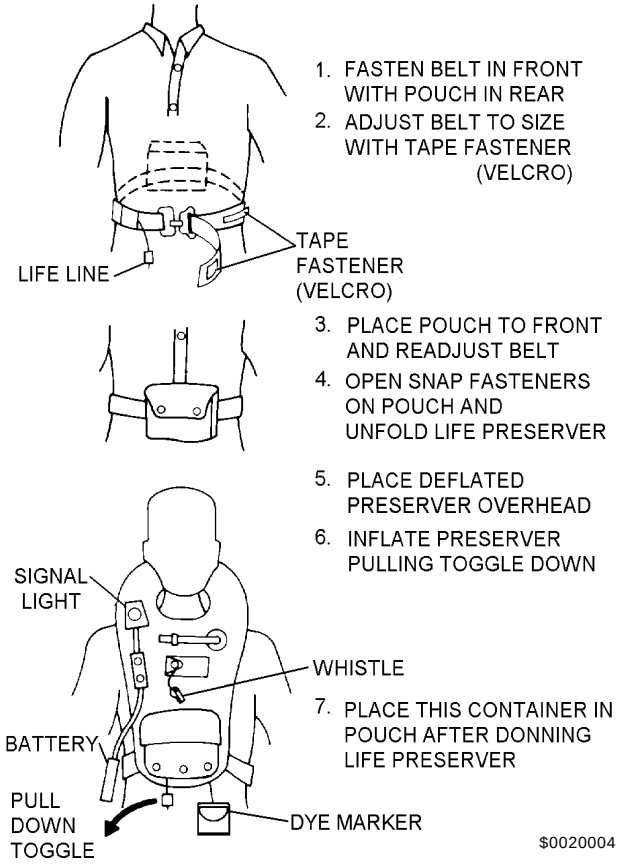 	Front of storage container	1/4 inch 1/8 inch
LIFE PRESERVER, INFLATABLE, UTILITY TYPE, LPP-1A NSN: 1R4220-00-089-7620LX CONTRACT NO. [applicable number] MANUFACTURER [name of manufacturer] SERIAL NO. [applicable number] DATE OF MANUFACTURE [month and year]	Front of flotation tube below whistle pocket	3/8 inch
LIFE PRESERVER, PASSENGER, AIR TRANSPORT TYPE LPP-1A	Front of storage container	1/4 inch

Notes: 1. Replacement markings shall be stamped or stenciled using waterproof black ink.

20-37. INFLATION ASSEMBLY INSPECTION. To inspect life preserver inflation assemblies, proceed as follows:

1. Remove CO_2 cylinders from valve assembly.

2. Examine inflation device, actuating lever and lanyard, and locking pins for fraying, corrosion, stripped threads, and other damage.

3. If required, remove any sharp edges from valve with a fine file.

4. Operate actuating lever several times to ensure that lever moves freely and that piercing pin moves properly inside valve body. Inspect point of piercing pin for serviceability. If point is flat, rounded, dull, or otherwise worn or damaged, replace inflation assembly.

NOTE

Each time inflation assembly gaskets or inflation assembly is removed and replaced for any reason, a functional test shall be conducted. Refer to paragraph 20-30. Use new gaskets when replacing device.

5. If any discrepancy is noted in device that is not repairable in accordance with paragraph 20-51, remove assembly and install a new inflation device.

6. Reinstall CO_2 cylinder. See paragraph 20-46.

20-38. INFLATION LANYARD INSPECTION. To inspect the inflation lanyard, proceed as follows:

1. Examine inflation lanyard for frays, ruptures, thin spots, split casing, and security of knots.

2. Replace unsatisfactory inflation lanyard. Refer to paragraph 20-57 or 20-58.

3. Safety-wire inflation assembly as needed in accordance with paragraph 20-47.

20-39. LEAKAGE TEST. All life preservers shall be subjected to a leakage test each Calendar/Phase Inspection. To perform a leakage test proceed in accordance with paragraph 20-41.

20-40. Test Fixture. A suggested test fixture, consisting of a three-way valve, pressure gage, and adapters for compartments being tested, is shown in Chapter 3. Test fixtures must be fabricated to meet the requirements of the schematic shown in figure 20-3.

20-41. Test Procedure. To test life preservers, proceed as follows:

Support Equipment Required

Quantity	Description	Reference Number
1	Test Fixture (or equivalent)	See Chapter 3

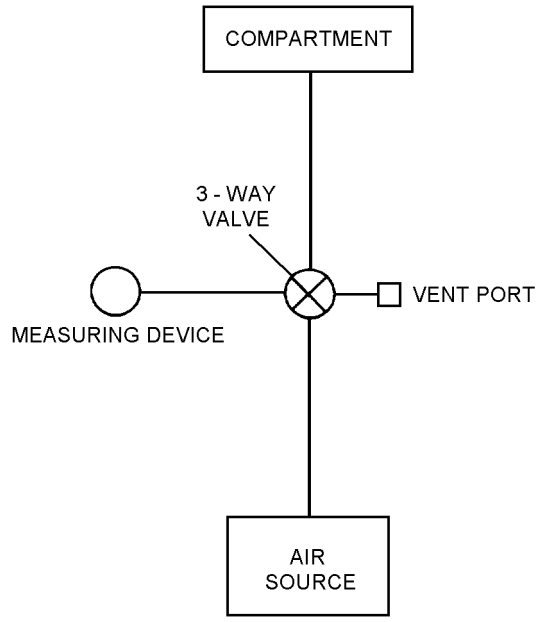

10200003

Figure 20-3. Test Fixture Schematic

CAUTION

Ensure test area is free of foreign objects.

1. Ensure all carbon dioxide has been removed from any preserver which has been functionally tested.

CAUTION

If 3-way valve is not used, measuring device valve must be closed when air feed valve is open.

Damage may occur to oral inflation valve if air supply pressure entering the life preserver exceeds ten (10) psi during this test.

NOTE

If a suitable air source is not available, water-pumped nitrogen (BB-N-411) may be substituted.

2. Unlock oral inflation valve and insert into rubber hose. Rotate valve to air supply position and inflate chamber. Alternately position valve between measuring device, vent and air supply until proper pressure of 2.0 psig is attained.

3. The air supply shall be securely shut off and after a minimum of 15 minutes, the test pressure of the single chamber shall be readjusted, if necessary to the leakage test pressure. Record time.

4. Disconnect air supply and check for leaks. Ensure all valves are closed.

5. Record temperature and barometric pressure.

6. After a minimum of 4 hours after completing step 3, record test pressure of single chamber. Test pressure shall not decrease to less than 1.6 psig for a life preserver chamber, from a maximum test pressure of 2.0 psig.

7. Record temperature and barometric pressure and correct test pressure for any changes in temperature and barometric pressure. Refer to tables 20-5 and 20-6.

EXAMPLE

UNCORRECTED TEST READING 1.70 PSI

	TEMP.	BARO.
START	75° F	29.90 IN. Hg
END	70° F	29.70 IN. Hg
DIFFERENCE	- 5° F	-0.20
CORRECTION	+0.155	-0.098

TEMP. CORRECTION	+ 0.155
+ BARO. CORRECTION	- 0.098
CORRECTION	+ 0.057

UNCORRECTED READING	1.700 PSI
+ CORRECTION	+ 0.057
CORRECTED READING	1.757 PSI

T0041007

Step 7 - Para 20-41

Table 20-5. Temperature Conversion Chart

Temperature Difference (°F)	Correction (psi)
1	0.031
2	0.062
3	0.093
4	0.124
5	0.155
6	0.186
7	0.217
8	0.248
9	0.279
10	0.310
Rise in temperature: subtract from gage reading. Fall in temperature: add to gage reading.	

8. If pressure of chamber is below 1.6 psig inflate to leakage test pressure and coat with a soap solution to locate leaks. Mark leak areas. Rinse preserver with fresh water, air dry and repair in accordance with paragraph 20-52.

9. Deflate preserver in accordance with paragraph 20-31.

Table 20-6. Barometric Pressure Conversion Chart

Press. Diff. (inHG)	Corr. (psi)	Press. Diff. (inHG)	Corr. (psi)	Press. Diff. (inHG)	Corr. (psi)	Press. Diff. (inHG)	Corr. (psi)	Press. Diff. (inHG)	Corr. (psi)
0.01	0.005	0.16	0.078	0.31	0.152	0.46	0.225	0.61	0.299
0.02	0.010	0.17	0.083	0.32	0.157	0.47	0.230	0.62	0.304
0.03	0.015	0.18	0.088	0.33	0.162	0.48	0.235	0.63	0.309
0.04	0.020	0.19	0.093	0.34	0.167	0.49	0.240	0.64	0.314
0.05	0.025	0.20	0.098	0.35	0.172	0.50	0.245	0.65	0.319
0.06	0.030	0.21	0.103	0.36	0.176	0.51	0.250	0.66	0.323
0.07	0.035	0.22	0.108	0.37	0.181	0.52	0.254	0.67	0.328
0.08	0.040	0.23	0.113	0.38	0.186	0.53	0.260	0.68	0.333
0.09	0.045	0.24	0.118	0.39	0.191	0.54	0.265	0.69	0.338
0.10	0.049	0.25	0.123	0.40	0.196	0.55	0.270	0.70	0.343
0.11	0.054	0.26	0.127	0.41	0.201	0.56	0.275	0.71	0.348
0.12	0.060	0.27	0.132	0.42	0.206	0.57	0.279	0.72	0.353
0.13	0.064	0.28	0.137	0.43	0.211	0.58	0.284	0.73	0.358
0.14	0.069	0.29	0.142	0.44	0.216	0.59	0.289	0.74	0.363
0.15	0.073	0.30	0.147	0.45	0.221	0.60	0.294	0.75	0.368

Rise in pressure: add to gage reading.
Fall in pressure: subtract from gage reading.

10. Ensure that inflation valve lever is cocked. Install CO_2 cylinder in accordance with paragraph 20-46.

20-42. RECORDS UPDATING. Make necessary entries on the appropriate form in accordance with OPNAVINST 4790.2 Series.

20-43. CLEANING AND SERVICING.

20-44. Cleaning and servicing consist of cleaning the life preserver, case, container and/or pouch, installation of the inflation valve protective covers and CO_2 cylinders and, when required, safety wiring of the inflation valve actuating lever.

20-45. CLEANING OF LIFE PRESERVER CASINGS/BLADDERS. To clean life preservers, machine washing is preferred on casings, containers, and pouches. Alternate method is by hand. Remove any survival items and other detachable items and proceed as follows:

Materials Required

Quantity	Description	Reference Number
As Required	Detergent, General Purpose	MIL-D-16791 NIIN 00-282-9699
As Required	Cloth, Lint-Free, Type II	MIL-C-85043 NIIN 00-044-9281
As Required	Talc, Technical	MIL-T-50036A NIIN 01-080-9589

CAUTION

Solvents are not to be used in cleaning life preservers.

1. Prepare solution of detergent (MIL-D-16791) consisting of 1/4 to 1/2 ounce of detergent per gallon of water.

2. Apply cleaning solution to soiled area with a spray or sponge.

3. Allow solution to remain on surface for several minutes, then agitate with a soft brush or rag.

4. Rinse surface thoroughly with water; wipe with a cloth or sponge. Repeat this application until surface is free from all solution.

5. Dry casing before use and dry bladder with a lint-free cloth (MIL-C-85043). Apply a light coating of talc (MIL-T-50036A).

20-46. INSTALLATION OF CO_2 CYLINDER. To install CO_2 cylinder, proceed as follows:

Support Equipment Required

Quantity	Description	Reference Number
1	Scale (Gram)	A-A-52021-1 NIIN 00-514-4117 or equivalent
1	Die, Cylinder Thread Chaser	1842-008-01 (CAGE 03688) NIIN 00-069-4040

Materials Required

Quantity	Description	Reference Number
1	Valve Stem and Seat Seal Kit (Note 1)	105AS100-5 (CAGE 30003) NIIN 00-498-6964

Notes: 1. Seat Seal is obtained from Valve Stem and Seat Seal Kit, P/N 105AS100-5, NIIN 00-498-6964, which contains two top, two bottom, and two seat seal gaskets.

NOTE

Weight of charged cylinder will vary according to manufacturer.

1. Weigh a charged cylinder and compare the minimum stamped weight with the scale weight. Discard and replace cylinder if scale weight is 2 grams less than minimum stamped weight.

2. The proper configuration of the life preserver inflation assembly is as follows:

a. For the LPP-1, use one SAF-T-PAK inflator with one MIL-C-25369 Type I CO_2 cylinder, 25 to 28 grams, NIIN 00-372-0585.

NOTE

The SAF-T-PAK inflation assembly is no longer carried by supply. Use until no longer serviceable and replace with MIL-L-25370 Type II inflator and MIL-C-25369 Type CO_2 cylinder.

b. For the LPP-1A, use one MIL-L-25370 Type II inflator with one MIL-C-25369 Type II CO_2 cylinder, 28 to 31 grams, NIIN 00-543-6693.

3. Ensure that inflator lever is in a cocked position.

4. To assure a firm cylinder seat, conduct a cylinder thread count. Threaded portion of cylinder neck shall contain a minimum of seven full threads to assure a firm cylinder seat within valve body. Any cylinder found with less than seven full threads shall be discarded. See figure 20-4.

CAUTION

Steel threads on CO_2 cylinder can cause damage to aluminum threads on inflator if cylinder is not carefully threaded. If binding occurs during installation of cylinder, use thread chaser dye on cylinder thread to cut free excessive plating. Reinstall cylinder. If binding still occurs, replace cylinder.

5. After performing functional test, insert a new seat seal gasket. At intermediate inspection intervals, inspect condition of gasket and replace if necessary.

6. Install CO_2 cylinder into inflator body as far as hand twisting will permit.

NOTE

When replacing CO_2 cylinder to inflator, ensure that CO_2 cylinder passes through the holding patch loop.

7. Safety-wire inflator as required in accordance with paragraph 20-47.

8. Close inflation valve protective covers and secure with snap fasteners.

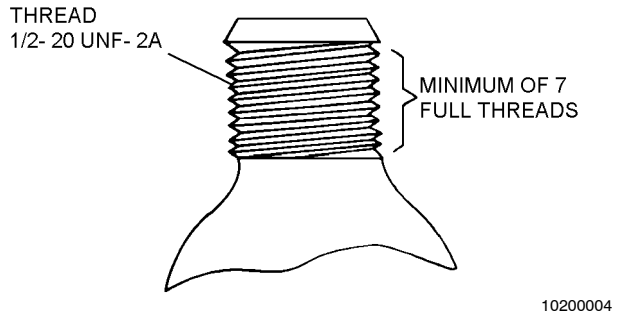

Figure 20-4. Cylinder Thread Count

20-47. SAFETY-WIRING. To safety-wire the inflation assembly, proceed as follows:

Materials Required

Quantity	Description	Reference Number
As Required	Copper Wire, Uncoated, Type S, 0.0159-inch Diameter	QQ-W-343 NIIN 00-236-9501

1. Pass a single strand of uncoated 0.0159-inch Type S copper wire through hole in inflation assembly body and through hole in actuation lever.

2. Twist the wire a minimum of four times and trim the excess.

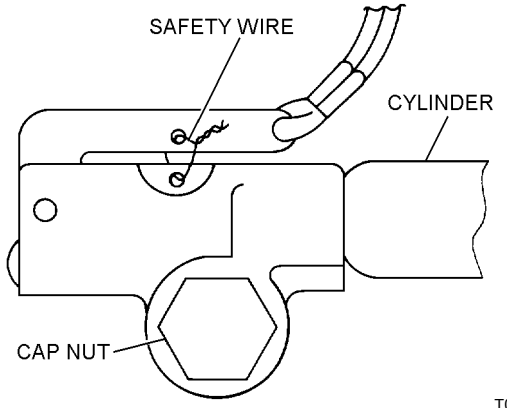

Step 2 - Para 20-47

20-48. REPAIR/REPLACEMENT.

20-49. This section contains instructions for the repair of various components or subassemblies of life preservers to ensure that appropriate items of equipment remain in Ready For Issue (RFI) status. Reference numbers for parts which are defective, corroded or worn and require replacement are included in the applicable paragraph of this section. Other replacement parts, such as carrying cases and personal survival equipment, are listed in the applicable table.

20-50. Replacement of easily removed assembly components such as CO_2 inflation valves and survival items, are authorized in addition to repair and replacement procedures documented in this section. The life preserver shall be subjected a functional and leakage test each time CO_2 inflation valves are removed and replaced for any reason, and each time inflation valve gaskets are replaced.

20-51. DETERMINATION OF REPAIRABILITY. Patching of holes, cuts, tears or punctures 1-inch square or less are the only repairs authorized in a life preserver bladder. Life preserver shall be considered beyond repair for any of the following reasons:

1. Porous fabric areas on flotation bladder.

2. Split or open bladder seams.

3. Leakage test failure resulting from other than repairable cut, tear or puncture.

4. Holes, cuts, tears or punctures within 1-inch of flotation bladder seams.

5. Deterioration of the polychloroprene-coated fabric caused by oil, grease, or any other foreign substance.

6. Deterioration of the polychloroprene fabric caused by a heavily mildewed condition.

20-52. CEMENTING LIFE PRESERVERS. Cementing of life preservers shall performed as follows:

Support Equipment Required

Quantity	Description	Reference Number
1	Roller, Wooden	GGG-R-00620 NIIN 00-243-9401

NOTE

Toluene shall be the primary solvent used in the fabrication or repair of this assembly. MEK may be used if toluene is not available. Always use solvents sparingly and wipe up excess solvents; do not allow to dry by evaporation.

Materials Required

Quantity	Description	Reference Number
1	Brush, Disposable	NIIN 00-514-2417

Materials Required

Quantity	Description	Reference Number
As Required	Toluene	TT-T-548 NIIN 00-281-2002
	-or-	
As Required	Methyl Ethyl Ketone (MEK)	TT-M-261 NIIN 00-281-2762
As Required	Cement, Class 3, Polychloroprene	MIL-A-5540 NIIN 00-142-9913
As Required	Talc, Technical	MIL-T-50036A NIIN 01-089-9589

WARNING

Do not use toluene or MEK near open flame, heat or electrical sparks. Avoid prolonged contact with skin or breathing of fumes. Use only in a well ventilated area.

CAUTION

Use only Polychloroprene adhesives and Polychloroprene-coated cloth patches on Polychloroprene-coated LPP-1, -1A flotation assemblies.

NOTE

Toluene or MEK must be applied vigorously to life preserver material over three years old in order to reactivate the material prior to cementing. Pigment from the material coloring staining a cloth rubbed over the treated surface will indicate the material has been reactivated. Cement shall be applied immediately after the surface has dried.

1. Clean both surfaces to be cemented with four applications of toluene or MEK. Apply toluene or MEK with back-and-forth strokes on the first and third applications, and one-way strokes on the second and fourth applications. Allow area to dry between applications.

CAUTION

The effective active period of adhesive mixture composed of polychloroprene and an accelerator is eight (8) hours. Do not use mixture if older than eight hours.

2. Prepare only enough mixture for 8 hours. Dispose of any remaining mixture.

3. Using a disposable brush, apply cement to completely cover surfaces to be cemented. Use long, one direction strokes and complete each surface before cement becomes tacky as the brush may pull tacky cement from the surface. Allow to dry for 10 minutes.

4. Apply a second coat of cement as in step 3. Use brush strokes perpendicular to the original direction.

5. When second coat of cement has become tacky, place pieces together. If cemented area has a cut or tear, butt edges of damage before applying patch. Roll out bubbles with a wooden roller.

6. Allow cement to cure a minimum of 48 hours.

7. Dust area with talc (MIL-T-50036A).

20-53. PATCHING LIFE PRESERVERS. Patching of life preserver shall be performed as follows:

NOTE

Life preserver is not repairable if it has holes, cuts, tears, or punctures over one-inch square.

Materials Required

Quantity	Description	Reference Number
As Required	Cloth, Life Preserver, Type I, Orange	MIL-C-19002 NIIN 00-060-9136
	-or-	
	Cloth, Life Preserver, Type I, Yellow	MIL-C-19002 NIIN 00-935-6427

CAUTION

Use only Polychloroprene adhesive and Polychloroprene-coated cloth patches on Polychloroprene-coated LPP-1, -1A life preserver assemblies.

NOTE

Select patch color as near as possible to color of life preserver being repaired.

1. Cut a rounded patch 1 inch larger than damage on all sides.

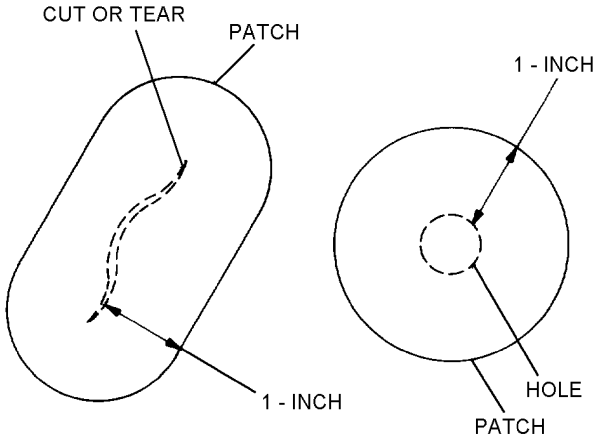

T0053001

Step 1 - Para 20-53

2. Center patch over damage and trace an outline of patch on fabric.

3. Cement patch to damaged area in accordance with paragraph 20-52.

4. Perform a leakage test.

20-54. INSPECTION RECORD PATCH.

NOTE

The 28th In-Service Management Panel meeting for Aviation Life Support Systems rescinded the requirement for the packer to sign the Inspection Record Patch on life preservers. The requirement for all other documentation remains unchanged. The reason for this change is that most history patches are unreadable and the packer's and inspector's names are documented on Aviation Crew Systems Records.

20-55. REPLACEMENT OF ORAL INFLATION VALVE. To replace the oral inflation valve, proceed as follows:

NOTE

Replacement of oral inflation valves can only be obtained through salvage of BCM'ed or surveyed inflatable survival equipment.

Materials Required

Quantity	Description	Reference Number
1	Valve, Oral Inflation	—
As Required	Cement, Polychloroprene	MIL-A-5540 NIIN 00-142-9913

Figure 20-5 Deleted.

Materials Required (Cont)

Quantity	Description	Reference Number
As Required	Brush, Disposable	NIIN 00-514-2417
As Required	Toluene	TT-T-548 NIIN 00-281-2002
	-or-	
As Required	Methyl Ethyl Ketone (MEK)	TT-M-261 NIIN 00-281-2762

CAUTION

Only toluene or MEK shall be used to clean oral inflation valve and tube. Only Polychloroprene cement (MIL-A-5540, NIIN 00-142-9913) shall be used to cement oral inflation valve into oral inflation tube.

1. Carefully cut through metal clamp securing oral inflation valve to oral inflation tube, and remove metal band and oral inflation valve.

2. If the tip of the oral inflation tube was damaged during removal of valve, trim off damaged section.

3. Clean both surfaces to be cemented with toluene or MEK. Allow areas to dry.

4. Using a small disposable brush, carefully apply a small amount of Polychloroprene cement to the surfaces of the tube and the valve which are to be cemented together.

5. Immediately place oral inflation valve into oral inflation tube. Oral inflation valve should be inserted up to valve shoulder. Inspect for proper application/cement.

6. Tightly wrap the cemented portion of the oral inflation tube with cord or wire and allow to cure for 48 hours before removing wrap.

7. Perform leakage test in accordance with paragraph 20-39.

20-56. RECEMENTING OF LPP-1, -1A BLADDER SEAMS. Recementing of seams is not authorized.

CAUTION

Recementing of the lap seam is not authorized for polychloroprene LPP-1 and LPP-1A life preservers.

NOTE

If bladder exhibits leakage from lap seam, bladder has ruptured. Dispose of life preserver after usable parts have been salvaged.

20-57. REPLACEMENT OF LPP-1 LANYARD CORD. To replace LPP-1 life preserver lanyard cord, proceed as follows:

Materials Required

Quantity	Description	Reference Number
15 inches	Cord, Nylon, Type I (color optional)	MIL-C-5040 NIIN 00-014-6699

1. Carefully remove carbon dioxide cylinder from the inflator assembly.

2. If desired, remove nut and rubber gasket retaining the inflator and remove inflator and lanyard assembly.

3. Cut lanyard to be replaced and discard along with the two brass clips.

4. Fold the 15-inch length of cord in half, pass folded end through hole in end of inflator lever and tie the cord strands with a lark's head knot, followed by binder knot.

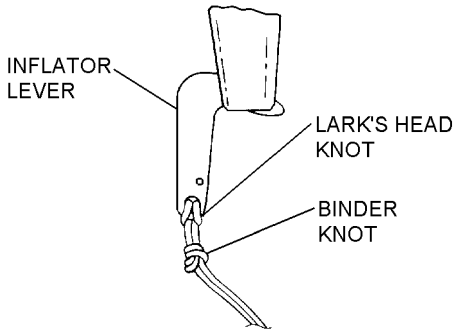

T0057004

Step 4 - Para 20-57

5. Thread the cord strands through the top of the knob (one strand through each hole) and tie a binder knot three inches from the lever end.

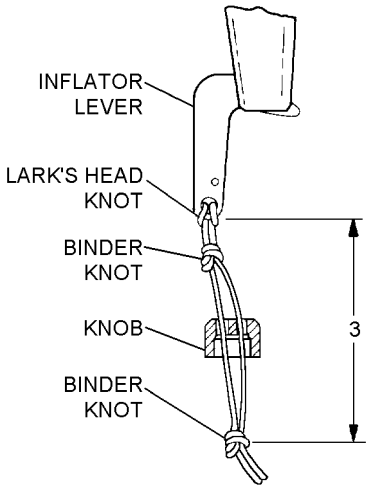

T0057005

Step 5 - Para 20-57

6. Slide knob down to single knot and tie a binder knot on the top of the knob to secure it in position.

NOTE

Ensure 2-inch length of lanyard exits from the end of the lever to the top of the knob.

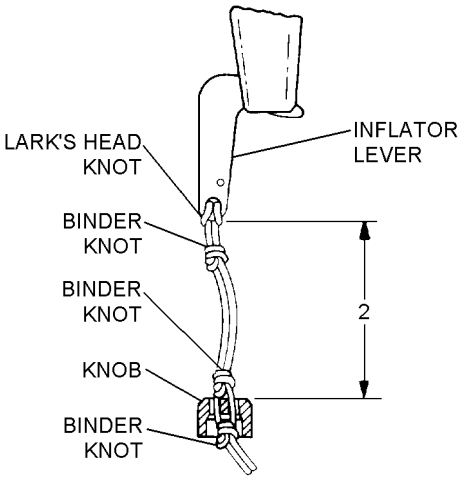

T0057006

Step 6 - Para 20-57

7. Install inflator and gasket, nut and CO_2 cylinder.

20-58. REPLACEMENT OF LPP-1A LANYARD CORD. To replace LPP-1A life preserver lanyard cord, proceed as follows:

Materials Required

Quantity	Description	Reference Number
16 inches	Nylon, Type I (color optional)	MIL-C-5040 NIIN 00-014-6699

1. Carefully remove carbon dioxide cylinder from the inflator assembly.

2. If desired, remove nut and gasket retaining the inflator and remove inflator and lanyard assembly.

3. Cut lanyard to be replaced and discard along with the two brass clips.

4. Fold the 16-inch length cord in half, pass folded end through hole in end of inflator lever and tie the cord strands with a lark's head knot, followed by a binder knot.

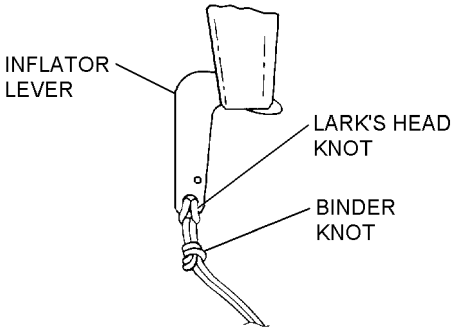

T0058004

Step 4 - Para 20-58

5. Thread the cord strands through the top of the knob (one strand through each hole) and tie a binder knot 4 inches from the lever end.

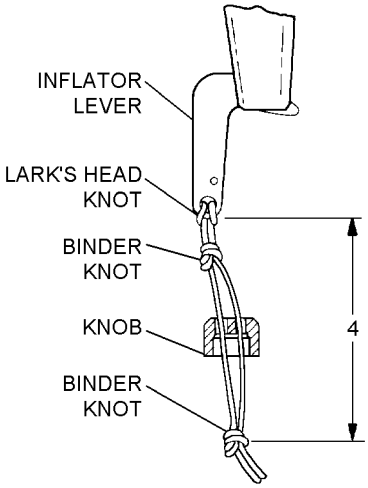

T0058005

Step 5 - Para 20-58

6. Slide knob down to single knot and tie a binder knot on the top of the knob to secure it in position.

NOTE

Ensure 3-inch length of lanyard exits from end of the lever to the top of the knob.

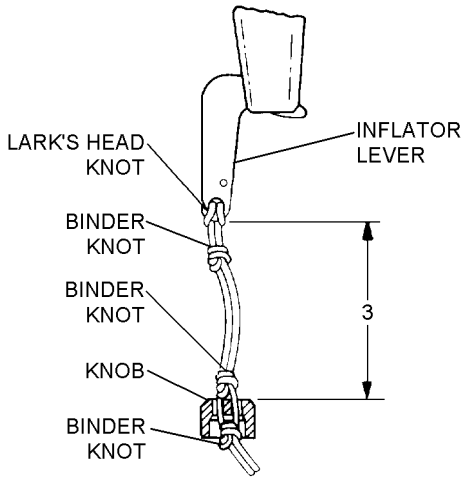

Step 6 - Para 20-58

7. Install inflator and gasket, nut and CO_2 cylinder.

20-59. REPLACEMENT OF DEFECTIVE PLASTIC SNAP FASTENERS WITH METAL SNAP FASTENERS. To replace defective plastic snap fasteners, proceed as follows:

Materials Required

Quantity	Description	Reference Number
1	Cap, Snap Fastener	MS27981-1B NIIN 00-276-4954
1	Socket, Snap Fastener	MS27981-3B NIIN 00-276-4966
1	Stud, Snap Fastener	MS27981-4B NIIN 00-901-9660
2	Post, Snap Fastener	MS27981-5B NIIN 00-250-6858

NOTE

When replacing a defective snap fastener, the mating snap fastener must also be replaced.

1. Using end cutters, remove damaged plastic snap fastener stud and mating socket from eyelets and buttons.

2. Install new metal snap fasteners as necessary.

20-60. FABRICATION OF SURVIVOR'S LIGHT ATTACHMENT POCKET. To fabricate a survivor's light attachment pocket proceed as follows:

Materials Required

Quantity	Description	Reference Number
2 1/2 x 6 inches	Cloth, Nylon, Polychloroprene-coated, Type I	MIL-C-19002 NIIN 00-060-9136
1	Cap, Snap Fastener	MS27981-1B NIIN 00-276-4954
1	Socket, Snap Fastener	MS27981-3B NIIN 00-276-4966
As Required	Nylon Thread, Size E	V-T-295 NIIN 00-204-3884

1. Cut pattern as shown in figure 20-6, including opening for lamp and slot for battery cord.

2. Insert lamp in opening and battery through slot.

3. Fold cloth in half and sew as shown in figure 20-6 using 8 to 10 stitches per inch.

4. Install button and socket as shown in figure 20-6.

5. Make necessary entries on appropriate form in accordance with OPNAVINST 4790.2 Series.

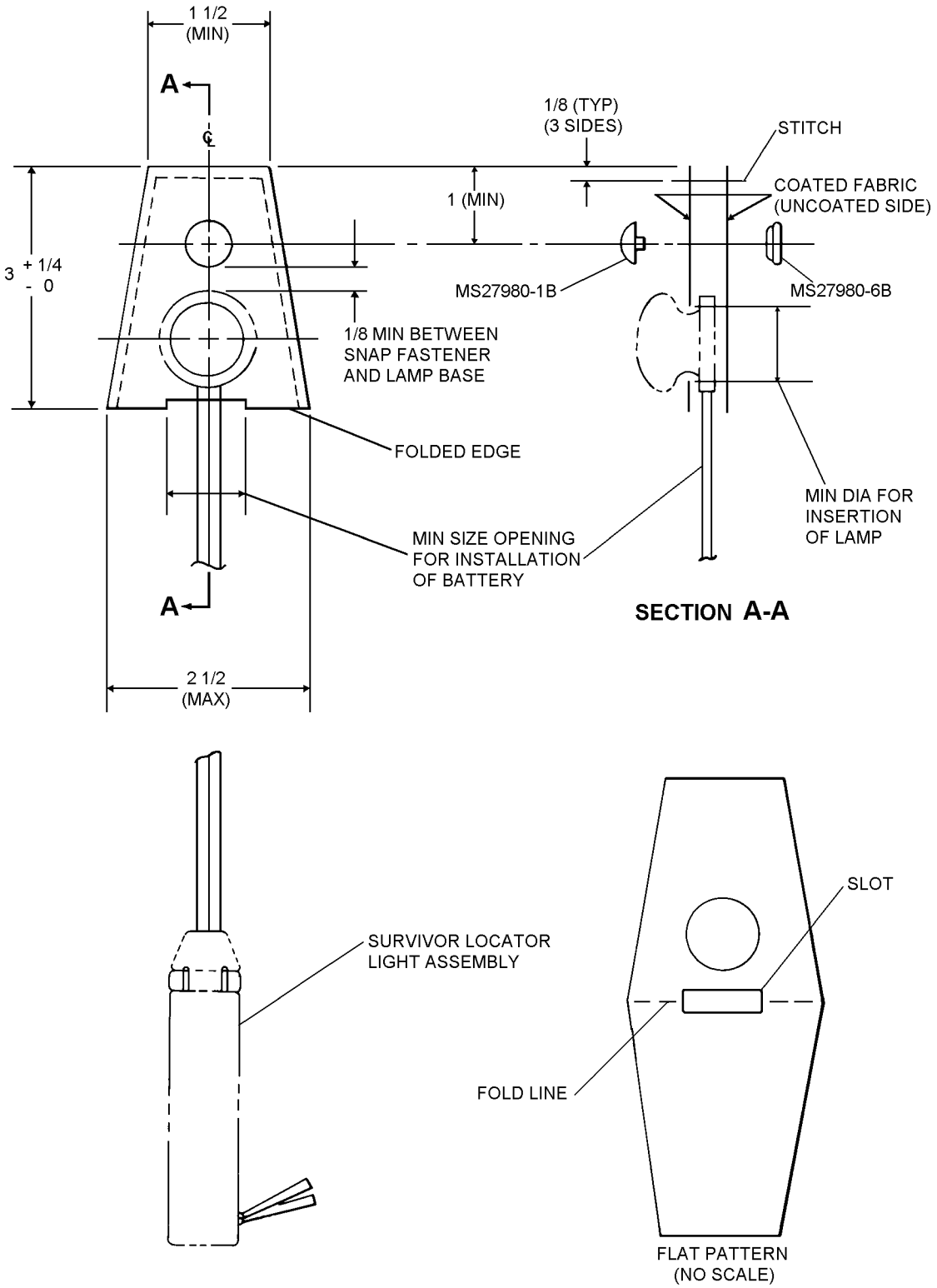

10200006

Figure 20-6. Fabrication of Attachment Pocket

20-61. REPAIR OF CORRODED CO_2 INFLATION VALVE MIL-L-25370, TYPE II. To repair CO_2 inflation valves on LPP-1 and LPP-1A, proceed as follows:

Materials Required

Quantity	Description	Reference Number
As Required	Lubricant, Silicone	DC7 (CAGE 71984) NIIN 00-975-0712
1	Valve Stem and Seat Seal Kit (Note 1)	105AS100-5 (CAGE 30003) NIIN 00-498-6964
As Required	Cloth, Emery No. 240	—
1	Valve, Inflation	MIL-L-25370, Type II
As Required	Abrasive Mat	MIL-A-9962 NIIN 00-967-5093
As Required	Corrosion Preventive Compound (Amiguard) Type I	MIL-C-85054 NIIN 00-041-1596

Notes: 1. Valve Stem and Seat Seal Kit, P/N 105AS100-5, NIIN 00-498-6964, contains two top, two bottom, and two seat seal gaskets.

1. Remove CO_2 cylinder from valve and retain. Discard seat seal gasket.

2. Remove inflation valve from preserver. Discard two gaskets on valve stem.

3. Remove grooved taper pin (retaining lever) from inflation valve, using awl and mallet. See figure 20-7.

4. Remove lever, spring, and piercing pin. If spring is broken or corroded, replace entire valve.

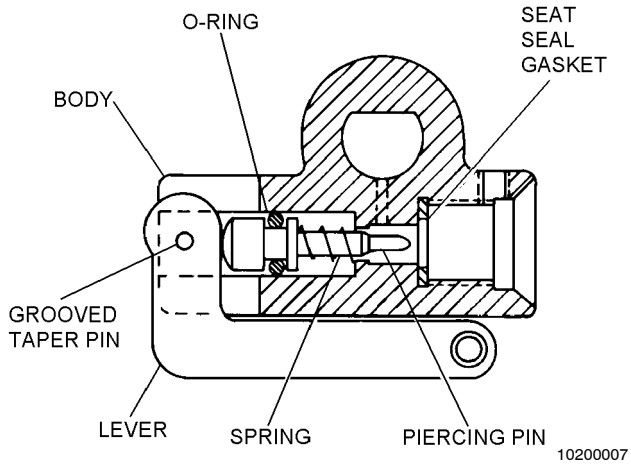

Figure 20-7. CO_2 Inflation Assembly

5. If piercing pin or actuating lever is corroded, remove corrosion with abrasive mat. If abrasive mat is ineffective, use 240 grit emery cloth. Do not damage O-ring on piercing pin. Wipe off any dirt or moisture from actuating lever and apply a thin coat of MIL-C-85054 and allow to dry.

6. Clean residue from actuating lever on piercing pin. Lightly coat base of piercing pin with silicone lubricant.

7. Reassemble inflation valve and operate actuating lever three or four times. Ensure that lever and piercing pin move freely.

8. If piercing pin and lever do not move freely, obtain replacement valve, MIL-L-25370, Type II.

9. Reinstall inflation valve on life preserver using new gaskets.

10. Install cap nut onto valve stem and torque to a value of 8 ±1 in-lb.

11. Reinstall CO_2 cylinder using new seat seal gasket.

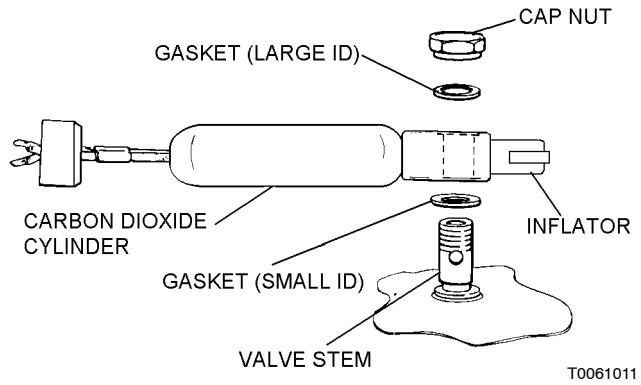

Step 11 - Para 20-61

20-62. REPLACEMENT OF TOP AND BOTTOM GASKETS. To replace the top and bottom gaskets on the inflator, proceed as follows:

Support Equipment Required

Quantity	Description	Reference Number
1	Wrench, 9/16-inch	—

Materials Required

Quantity	Description	Reference Number
1	Valve Stem and Seat Seal Kit (Note 1)	105AS100-5 (CAGE 30003) NIIN 00-498-6964

Notes: 1. Valve Stem and Seat Seal Kit, P/N 105AS100-5, NIIN 00-498-6964, contains two top, two bottom, and two seat seal gaskets.

1. Remove cap nut and top gasket from inflator.

WARNING

Ensure that gaskets are properly positioned. The top gasket has a larger internal diameter than the bottom gasket.

2. Remove inflator and replace bottom gasket.

3. Carefully place inflator onto valve stem.

4. Install top gasket onto valve stem.

5. Tighten cap nut onto valve stem and torque to a value of 8 ±1 in-lb.

6. Perform functional and leakage test on life preserver. Refer to paragraphs 20-30 and 20-39.

20-63. REPLACEMENT OF CHECK VALVE ASSEMBLY. To replace a defective check valve assembly, proceed as follows:

Support Equipment Required

Quantity	Description	Reference Number
1	Tool, Valve Core	8769A or equivalent (CAGE 27783) NIIN 01-354-5423
1	Wrench, Torque	—

Materials Required

Quantity	Description	Reference Number
1	Valve, Pneumatic Inflator (Check Valve Assembly) (Note 1)	Schrader-Bridgeport P/N 8457500047

Notes: 1. Schrader-Bridgeport P/N 8457500047 must be open purchased from:
Schrader-Bridgeport Intl
205 Frazier Rd
P.O. Box 668
Altivista, VA 24517
Phone (804) 369-8875

1. If not available, fabricate a valve core tool as shown in Chapter 3.

2. Remove inflator cap nut.

3. Insert valve core tool and unscrew check valve from valve stem.

4. Insert new check valve in valve stem and tighten with valve core tool hand tight.

5. Replace cap nut and torque to a value of 8 ±1 in-lb.

6. Perform a functional and leakage test on life preserver. Refer to paragraphs 20-30 and 20-39.

20-64. REPAIR/FABRICATION OF LIFELINE AND TOGGLE ASSEMBLY. To repair or fabricate life line and toggle assembly, proceed as follows:

Support Equipment Required

Quantity	Description	Reference Number
1	Dowel, hard wood 2 1/2-inch x 5/8-inch diameter	—
1	3/16-inch drill	—

Materials Required

Quantity	Description	Reference Number
36-inch length	Cord, Nylon, Type III	MIL-C-5040 NIIN 00-240-2146
As Required	Thread, Nylon Type II, Size E	V-T-295 NIIN 00-204-3884

1. Drill a 3/16-inch diameter hole in the center of a 2 1/2-inch x 5/8-inch diameter wooden dowel.

2. Pass one end of a 36-inch length of Type III nylon cord through the 3/16 inch diameter hole in center of wooden dowel. Secure cord with an overhand knot on each side of dowel.

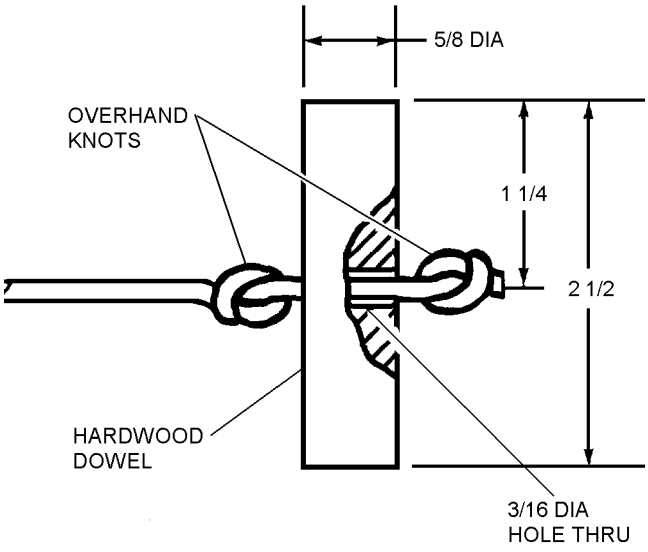

T0064002

Step 2 - Para 20-64

3. Place a 1 1/4-inch diameter bowline loop in nylon cord 8 1/2 inches from center of wooden dowel.

4. Attach free end of Type III nylon cord to belt using a bartack in three places.

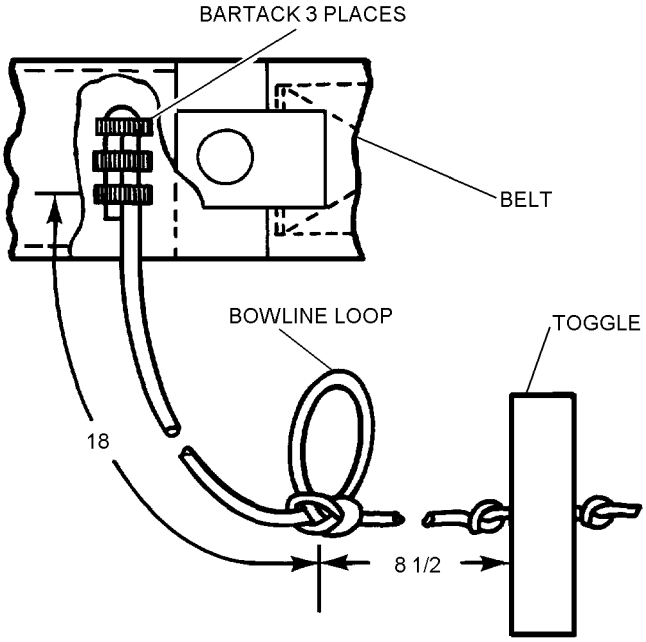

T0064004

Step 4 - Para 20-64

20-65. PACKING PROCEDURE FOR LPP-1 AND -1A LIFE PRESERVER ASSEMBLY.

20-66. The LPP-1, -1A Life Preserver Assembly shall be packed by qualified personnel at the lowest level of maintenance possible. For cleaning and servicing refer to paragraph 20-43.

20-67. To pack an LPP-1, -1A Life Preserver Assembly, proceed as follows:

1. Ensure that preserver, pouch, belt, and storage container have been inspected in accordance with paragraph 20-29.

NOTE

NAVAIR 13-1-6.5 contains information on inspection and replacement of survival items.

2. Ensure that survival items have been inspected for expiration and damage. See table 20-1 for items used.

3. Ensure that belt is inserted through retaining channel on rear of preserver.

4. Lay preserver on a clean surface with inflation assembly facing up.

5. Insert ends of belt through slots in pouch.

6. Ensure that each survival item is properly stowed or attached and flotation chamber completely deflated.

NOTE

The dye marker shall be tied to the belt and the whistle shall be tied to the whistle pocket. Each shall be secured with a 24 ± 2-inch length of Type I nylon cord (MIL-C-5040). Use bowline knots only.

7. Position dye marker in bottom of pouch. Lock oral inflation valve, and then insert into tube loop.

8. Fold flotation tube sides over to width of pouch.

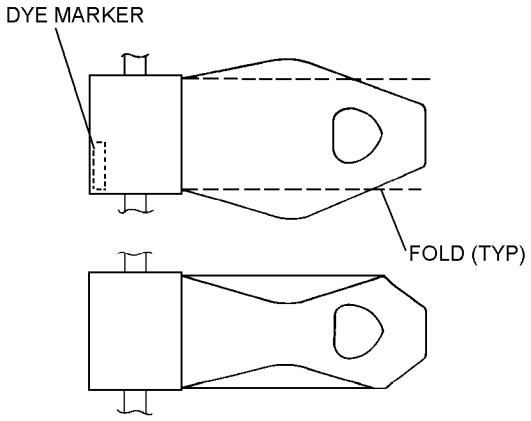

Step 8 - Para 20-67

9. Roll flotation tube into pouch and close pouch.

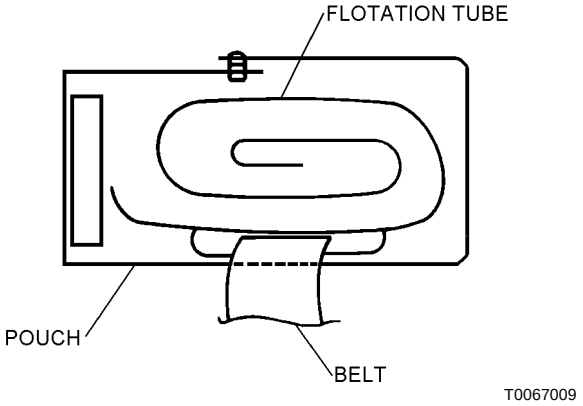

Step 9 - Para 20-67

10. Insert packed preserver into storage container, if used. Use of storage containers is optional.

NOTE

Step 11 should be performed only after scheduled Calendar/Phase inspection or maintenance. This step is not performed when life preservers are replaced in pouch and container after normal use.

11. Make necessary entries on appropriate form in accordance with OPNAVINST 4790.2 Series.

Section 20-4. Illustrated Parts Breakdown (IPB)

20-68. GENERAL.

20-69. This section lists and illustrates the assemblies and detail parts of the LPP-1 and LPP-1A Life Preserver Assemblies.

20-70. The Illustrated Parts Breakdown should be used during maintenance when requisitioning and identifying parts.

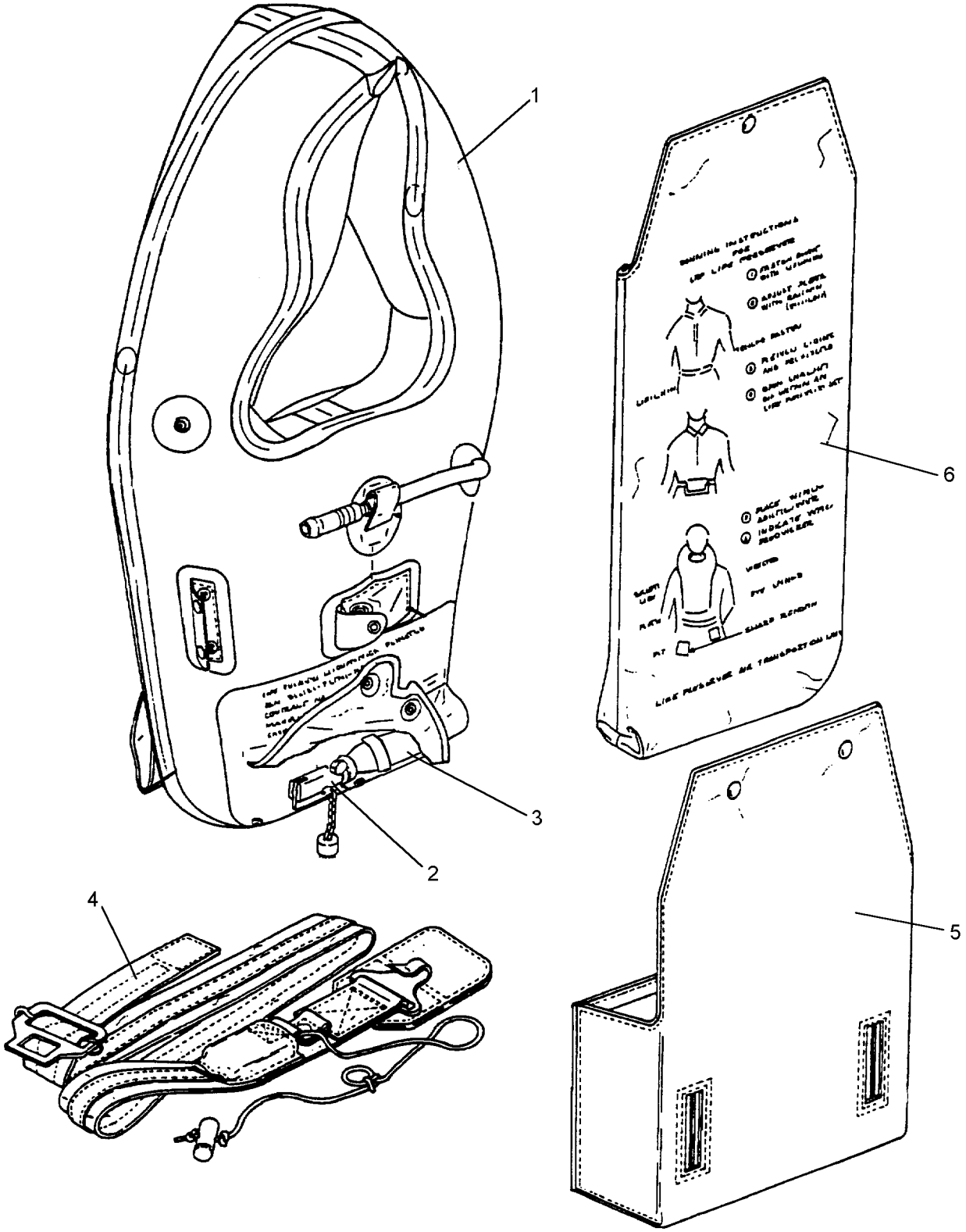

10200008

Figure 20-8. LPP-1 and -1A Life Preserver Assembly, Illustrated Parts Breakdown

Figure and Index Number	Part Number	Description 1 2 3 4 5 6 7	Units Per Assembly	Usable On Code
20-8	No Number	LPP-1, -1A LIFE PRESERVER ASSEMBLY	REF	
-1	36H1336-1	. LIFE PRESERVER, LPP-1, Inflatable	1	A
	68A94D2-1	. LIFE PRESERVER, LPP-1A, Inflatable	1	B
-2	SAF-T-PAK	. . INFLATION VALVE ASSEMBLY . . . . . (See Note 1)	1	A
	MIL-L-25370	. . INFLATION VALVE ASSEMBLY . . . . . (Type 2)	1	B
-3	NIIN 00-372-0585	. . . CO_2 CYLINDER, 25-28 Grams . . . . . (MIL-C-25369, Type 1)	1	A
	NIIN 00-543-6693	. . . CO_2 CYLINDER, 28-31 Grams . . . . . (MIL-C-25369, Type 2)	1	B
-4	68A94D4-1	. . BELT ASSEMBLY	1	
-5	68A94D5-1	. . POUCH ASSEMBLY	1	
-6	36D1340-1	. . STORAGE CONTAINER ASSEMBLY . . . . . (LPP-1)	1	A
	68A94D11-1	. . STORAGE CONTAINER ASSEMBLY . . . . . (LPP-1A)	1	B
	NOTE: 1. SAF-T-PAK inflation assembly no longer carried by supply. Use until no longer serviceable and replace with MIL-L-25370 (Type 2).			

NUMERICAL INDEX

Part Number	Figure and Index Number	SM&R Code
MIL-L-25370	20-8-2	PA--Z
NIIN 00-372-0585	20-8-3	PAOZZ
NIIN 00-543-6693	20-8-3	PAOZZ
SAF-T-PAK	20-8-2	
36D1340-1	20-8-6	PAOZZ
36H1336-1	20-8-1	PAOGG
68A94D2-1	20-8-1	PAOGG
68A94D4-1	20-8-4	PAOZZ
68A94D5-1	20-8-5	PAOZZ
68A94D11-1	20-8-6	PAOZZ

THIS PAGE INTENTIONALLY LEFT BLANK.

CHAPTER 21

DELETED

THIS PAGE INTENTIONALLY LEFT BLANK.

CHAPTER 22

LPU-31/P LIFE PRESERVER, HELICOPTER CREW

Section 22-1. Description

22-1. GENERAL.

22-2. The LPU-31/P life preserver assembly is authorized for use by helicopter combatant aircrewmen using the T-65 body armor.

22-3. CONFIGURATION.

22-4. The LPU-31/P life preserver assembly (see figure 22-1) weighs approximately 4 pounds and provides a minimum of 29 pounds of buoyancy. The LPU-31/P life preserver is composed of the LPP-1, -1A life preserver and a protective bladder cover.

NOTE

Prior to installing cover assembly on flotation assembly, remove the following items from the life preserver and retain for spare parts.

Storage Container
Pouch
Sea Dye Marker
Whistle
Survivor Locator Light

CAUTION

Use only Polychloroprene adhesives and Polychloroprene-coated cloth and patches on Polychloroprene-coated LPU-31/P life preserver assemblies.

22-5. The flotation assembly of the LPU-31/P is constructed of Polychloroprene-coated nylon cloth. It is equipped with an oral inflation valve, a valve stem, and an inspection record patch. See figure 22-1.

22-6. The belt consists of a 53-inch piece of webbing, an adjustable buckle and clasp, a toggle assembly and a toggle assembly pocket. The belt adjusts from a waist size of 30 to 52 inches and attaches the flotation assembly to the wearer by means of the belt loop on the flotation assembly. The toggle assembly consists of a wooden toggle and line, and is used to secure survivors together while they are in the water. When not in use, the toggle line is wrapped around the wooden toggle and stowed in a pocket located on the belt.

22-7. FUNCTION.

22-8. The LPU-31/P is manually inflated by pulling the inflation assembly lanyard down. In an emergency situation, the oral inflation valve should be used to top-off an inflated preserver, maintain inflation of a leaky preserver or to inflate a preserver when the inflation assembly malfunctions or fails. The oral inflation valve is also used to inflate a preserver with air during an inspection test and to deflate a preserver in preparation for packing.

22-9. DONNING PROCEDURE.

22-10. The LPU-31/P is donned by wrapping the belt around the waist with the preserver in the rear and the buckle and clasp in front. After buckling, rotate the preserver to the front and insert the head through the preserver opening. The armor is then donned over the covered preserver as shown in figure 22-2.

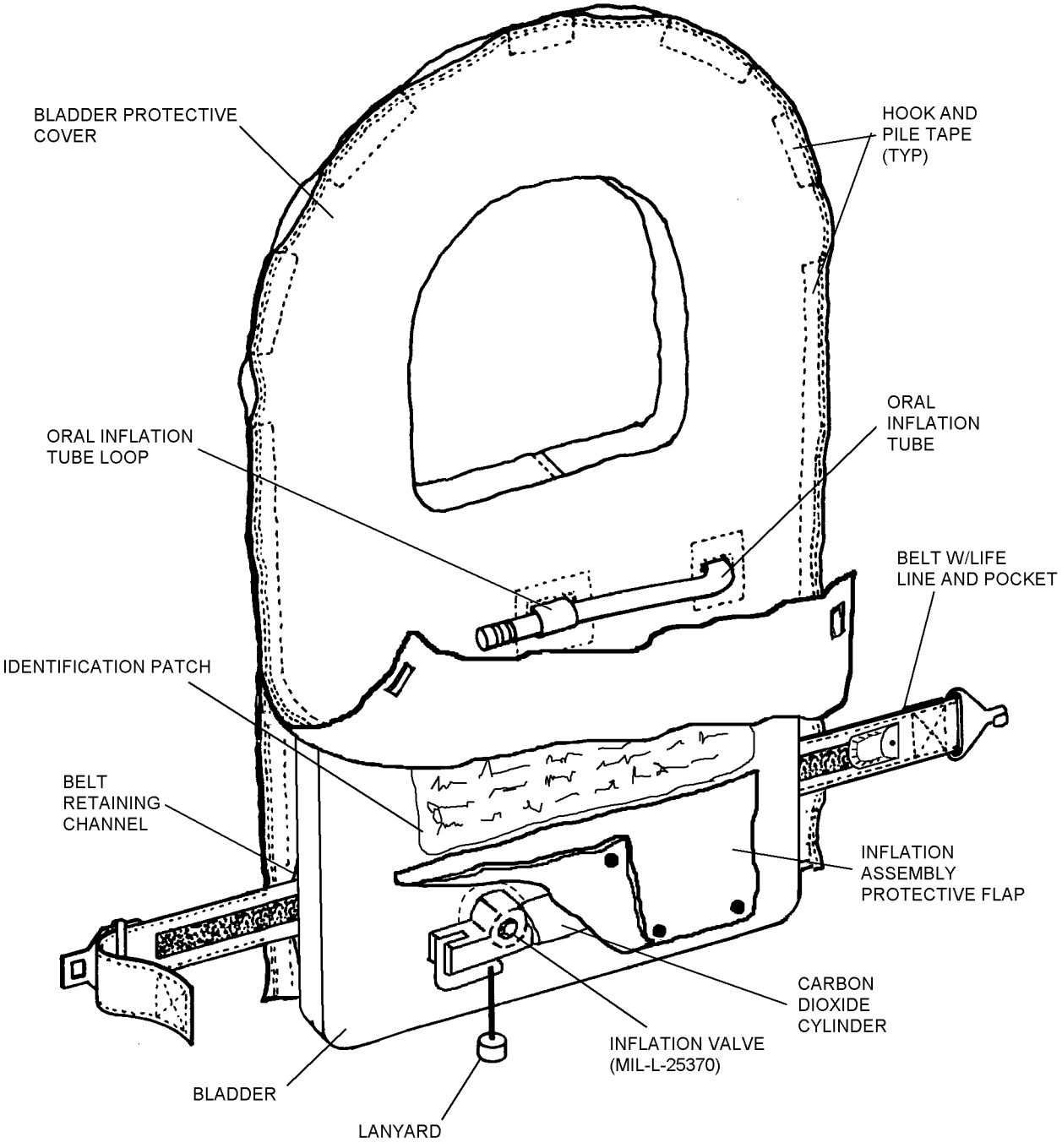

10220001

Figure 22-1. LPU-31/P Life Preserver Assembly, Parts Nomenclature

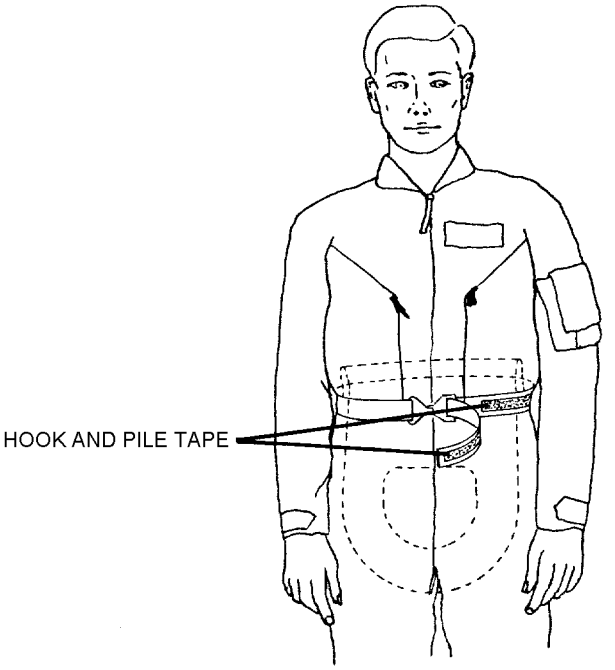

1. DON ASSEMBLY WITH DEFLATED PRESERVER IN REAR, BUCKLE IN FRONT. ADJUST TO SIZE USING HOOK AND PILE TAPE.

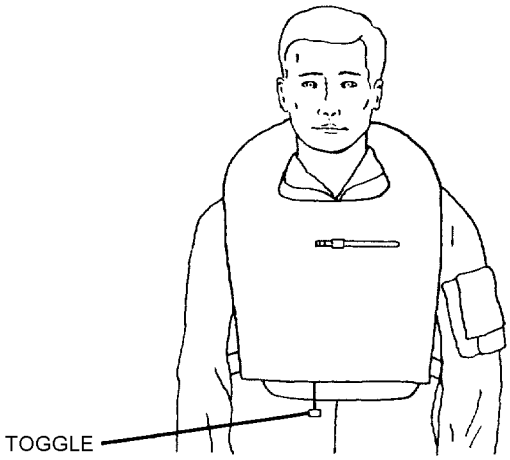

2. ROTATE PRESERVER TO FRONT, AND INSERT HEAD THROUGH OPENING. READJUST BELT.

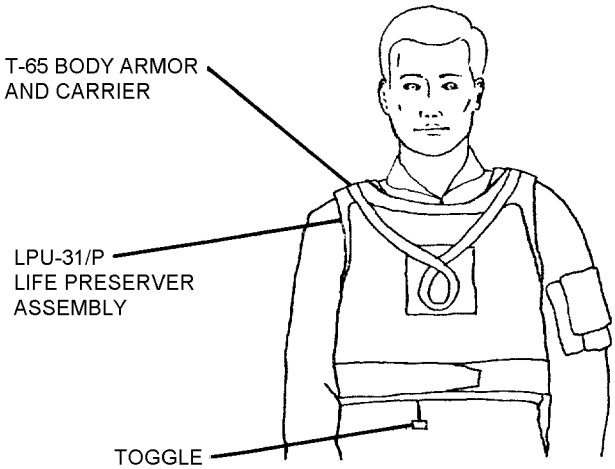

3. DON BODY ARMOR BY PLACING OVER HEAD. ADJUST TO SIZE USING WAIST BELT.

10220002

Figure 22-2. Donning Procedure

Section 22-2. Modifications

22-11. GENERAL.

22-12. There are no authorized modifications to the LPU-31/P life preservers at this time. Repairs and fabrication instructions to maintain serviceability are listed in table 22-1.

Table 22-1. LPU-31/P Common Repairs and Fabrications

Description of Repair or Fabrication	Paragraph Number
Determination of Repairability	22-46
Protective Cover Repair Procedures	22-48
Cementing Life Preserver	22-49
Patching Life Preserver	22-50
Replacement of Oral Inflation Valve	22-52
Recementing of Bladder Seams	22-53
Replacement of Lanyard Cord (LPP-1 Configuration)	22-54
Replacement of Lanyard Cord (LPP-1A Configuration)	22-55
Replacement of Defective Plastic Snap Fastener with Metal Snap Fasteners	22-56
Repair of Corroded CO_2 Inflation Valve	22-57
Replacement of Top and Bottom Gaskets	22-58
Replacement of Check Valve Assembly	22-59
Fabrication of Lifeline and Toggle Assembly	22-60
Fabrication of Protective Cover	22-61

Section 22-3. Maintenance

22-13. GENERAL.

22-14. This section contains information on inspection, disassembly, repair/replacement, testing, and reassembly of the LPU-31/P life preserver.

22-15. INSPECTION.

22-16. All life preservers shall be subjected to Preflight, Special and Calendar/Phase Inspections.

22-17. The Preflight Inspection shall be performed on life preservers prior to each flight by the aircrewmember to whom the life preserver is assigned. The Preflight Inspection shall be performed on life preservers installed in aircraft prior to each flight by assigned aircrewmembers.

22-18. The Special Inspection shall be performed on all aircraft installed life preservers at intervals not to exceed 30 days. The inspection shall be performed at the organizational level of maintenance by personnel assigned to the Aviator's Equipment Branch.

22-19. Upon completion of the inspection, make necessary entries on the appropriate form in accordance with OPNAVINST 4790.2 Series. The 30-Day Special Inspection may be recorded on a separate history card from the history card recording Calendar/Phase Inspections, functional checks, and modifications.

22-20. The Calendar/Phase Inspection shall be performed on all life preservers prior to placing in service. The Inspection cycle thereafter shall be as follows: personal issue life preservers shall be inspected once every 90 days. Aircraft-installed life preserver inspection shall coincide with the inspection cycle of the aircraft in which installed. See applicable Planned Maintenance System (PMS) publications for specific intervals. In no case shall the interval exceed 231 days. Unless operational requirements demand otherwise, the life preserver Calendar/Phase Inspection shall be performed by the intermediate level of maintenance or above. The functional test shall be performed prior to placing in service, every fourth inspection cycle thereafter, and whenever an inflation assembly is replaced. The leakage test shall be performed during every inspection cycle. If inspection indicates damage, complete appropriate forms in accordance with OPNAVINST 4790.2 Series and forward entire assembly to supply. Refer to paragraph 22-46 for determination of repairability.

22-21. QUALITY ASSURANCE. Properly detailed procedures present a logical sequence for the inspection process. The more critical procedures are underlined to designate steps which require a Quality Assurance inspection to assure performance of specific requirements. After the underlined step is performed by the Aircrew Survival Equipmentman, the procedure shall be verified before the next step is performed. This verification shall be performed by a Collateral Duty Inspector or Quality Assurance Representative (CDI, CDQAR, or QAR). Work Center supervisors are primarily responsible for quality assurance within their centers. OPNAVINST 4790.2 Series permits supervisors to nominate their more experienced personnel to serve as quality assurance inspectors. Nominated personnel shall be screened and examined by the Quality Assurance Officer prior to their designation as Quality Assurance Inspectors or Quality Assurance Representatives by the Commanding Officer. Under no circumstances shall an Aircrew Survival Equipmentman perform his own quality assurance inspection.

22-22. PREFLIGHT/SPECIAL INSPECTION. To perform a Preflight/Special Inspection, proceed as follows:

WARNING

Ensure that the inflation pull toggles are readily accessible. The pull toggles shall extend from the protective cover flap.

CAUTION

Do not open any sealed or safety-wired/safety tied portions of preserver for Preflight/Special Inspection.

1. Inspect exposed metal parts for corrosion and damage.

2. Inspect inflation assembly for presence of safety wire and CO_2 cylinders.

3. Inspect seams and harness for wear, snags, tears and abrasions.

4. Inspect protective cover fabric for cuts, tears, abrasions, security of stitching, and other damage.

5. Inspect safety ties on locking pins.

6. Inspect hook and pile tape closure for separation; fasten as necessary.

7. Adjust and don preserver to ensure proper fit.

8. If any discrepancy is noted, the preserver shall be removed from service and repaired in accordance with procedures in this volume.

22-23. ACCEPTANCE/CALENDAR/PHASE INSPECTION. The Acceptance/Calendar/Phase Inspection consists of the following tasks:

1. Inflation Handle Inspection

2. Protective Cover Inspection

3. Functional Test (every fourth inspection cycle)

4. Visual Inspection

5. Life Preserver Configuration

6. General Inspection

7. Markings Inspection

8. Inflation Assembly Inspection

9. Inflation Lanyard Inspection

10. Leakage Test

11. Records Updating

22-24. INFLATION PULL TOGGLE INSPECTION. Inspect inflation pull toggle for the following:

1. Attachment of inflation lanyard to toggle.

2. Cuts, tears, deterioration, abrasion, stains, and general cleanliness of inflation lanyard.

3. Cracked or broken pull toggle.

22-25. PROTECTIVE COVER INSPECTION. To 63inspect protective cover, proceed as follows:

1. Inspect fabric for cuts, tears, deterioration, abrasion, stains, and general cleanliness.

2. Inspect seams for proper adhesion or stitching.

3. Inspect straps and loops for security and wear.

4. Inspect any other parts for wear, damage, and security.

5. All hardware for security of attachment, corrosion, damage, wear and, if applicable, ease of operation.

6. Inspect snap fastener assemblies for presence, security of attachment, ease of operation, corrosion, and wear.

NOTE

All uni-directional snap fasteners shall be installed with the dot on the button of the snap fastener socket positioned on the side of the snap fastener to which lift must be applied to disengage the socket from the snap fastener stud.

7. If any discrepancies are found, the protective cover or pouch shall be repaired or removed from service as deemed appropriate by the inspection activity.

22-26. FUNCTIONAL TEST. To perform a functional test, proceed as follows:

CAUTION

Ensure area surrounding preserver is free of foreign objects.

1. Completely open preserver protective cover prior to conducting functional test. All hook and pile tape shall be separated, and unsnap protective cover of the inflation assembly.

2. Actuate inflation assembly.

3. The preserver shall fully inflate to design shape, without evidence of restriction, in less than 30 seconds.

4. If preserver does not properly inflate, determine cause. Ensure stem and valve are clean and free of foreign matter.

5. If correction is made, the preserver shall be functionally tested again.

6. Deflate preserver in accordance with paragraph 22-27 to remove all CO_2.

22-27. DEFLATION. To deflate a life preserver, proceed as follows:

Support Equipment Required

Quantity	Description	Reference Number
1	Pump, Rotary Vacuum (or equivalent)	NIIN 00-052-5015 (90567)
As Required	Hose, 3/8- or 1/2-inch Inside Diameter, Rubber	—

1. Attach one end of rubber hose to vacuum pump.

2. Deflate through oral inflation valves. Unlock oral inflation valve, hold in open position, and hold vacuum pump hose against end of oral inflation valve. When compartment is collapsed, release oral inflation valve. Screw lock closed.

22-28. VISUAL INSPECTION. Prior to visually inspecting a life preserver assembly, the life preserver shall be inflated with air to 1.0 psig.

CAUTION

Remove all carbon dioxide cylinders prior to inflating life preserver with air.

NOTE

If suitable air source is not available, water-pumped nitrogen (BB-N-411) may be substituted.

22-29. LIFE PRESERVER CONFIGURATION. The life preserver shall be updated by comparing it to figure 22-1 and section 22-4.

22-30. GENERAL INSPECTION. Examine life preservers for the following:

1. Preserver fabric for cuts, tears, punctures, deterioration and abrasion. Refer to paragraph 22-48 for repair instructions.

2. Seam tapes for proper adhesion. Refer to paragraph 22-53 for repair instructions.

3. Valve inlet stems for security.

4. Oral inflation valve(s) for cracks, security, ease of operation, and corrosion.

5. Patches for proper adhesion and wear. Refer to paragraph 22-50 for repair instructions.

6. Any other parts for wear or other damage.

7. All hardware for security of attachment, corrosion, damage, wear and, if applicable, ease of operation.

8. Preservers for stains, dirt, and general cleanliness. Refer to paragraph 22-38 for cleaning instructions.

9. Cross threading and/or loose manifold nuts.

22-31. MARKINGS INSPECTION. To inspect and restore marking, proceed as follows:

Materials Required

Quantity	Description	Reference Number
As Required	Ink, Marking, Laundry, Black	SPE-92 NIIN 00-161-4229
	-or-	
As Required	Ink, Drawing, Waterproof, Yellow	A-A-59291 NIIN 00-634-6583

1. Compare markings on preserver to table 22-2 as applicable.

2. Restore any faded markings.

3. Deleted.

4. Correct any markings which do not agree with the applicable table. Paint out old marking and enter new marking as close to proper position as possible.

Table 22-2. LPU-31/P Life Preserver Markings

Marking (Note 1)	Location	Letter Height
LIFE PRESERVER, PASSENGER, AIR TRANSPORT TYPE LPP-1 (NOTE 2) FSN [applicable number] SERIAL NO. [applicable number]	Front of flotation tube below whistle pocket	3/8 inch
LIFE PRESERVER, INFLATABLE, UTILITY TYPE, LPP-1A (NOTE 2) NSN: 1R4220-00-89-7620LX CONTRACT NO. [applicable number] MANUFACTURER [name of manufacturer] SERIAL NO. [applicable number] DATE OF MANUFACTURE [month and year]	Front of flotation tube below whistle pocket	3/8 inch

Notes: 1. Replacement markings shall be stamped or stenciled using waterproof black ink.
2. When issued for use as an LPU-31/P, the LPP-1 or the LPP-1A life preserver will be remarked as a LPU-31/P.

22-32. INFLATION ASSEMBLY INSPECTION. To inspect life preserver inflation assembly, proceed as follows:

1. Remove CO_2 cylinder from valve assembly.

2. Examine inflation device, actuating lever and lanyard, for fraying, corrosion, stripped threads, and other damage.

3. If required, remove any sharp edges from valve with a fine file.

4. Operate actuating lever several times to ensure that lever moves freely and that piercing pin moves properly inside valve body. Inspect point of piercing pin for serviceability. If point is flat, rounded, dull, or otherwise worn or damaged, replace inflation assembly.

NOTE

Each time inflation assembly gaskets or inflation assembly is removed and replaced for any reason, a functional check shall be conducted. Refer to paragraph 22-26. Use new gaskets when replacing device.

5. If any discrepancy is noted in device that is not repairable in accordance with paragraph 22-57, remove assembly and install a new inflation device.

6. Reinstall CO_2 cylinder. See paragraph 22-41.

22-33. INFLATION LANYARD INSPECTION. To inspect the inflation lanyard, proceed as follows:

1. Examine inflation lanyard for frays, ruptures, thin spots, split casing, and security of knots.

2. Replace unsatisfactory inflation lanyard. Refer to paragraph 22-54 or 22-55.

3. Safety-wire inflation assembly as needed in accordance with paragraph 22-42.

22-34. LEAKAGE TEST. All life preservers shall be subjected to a leakage test each Calendar/Phase Inspection. To perform a leakage test proceed in accordance with paragraph 22-35.

22-35. Test Fixture. A suggested test fixture, consisting of a three-way valve, pressure gage, and adapters for compartments being tested, is shown in Chapter 3. Test fixtures must be fabricated to meet the requirements of the schematic shown in figure 22-3.

22-36. Test Procedure. To test life preservers, proceed as follows:

Support Equipment Required

Quantity	Description	Reference Number
1	Test Fixture (or equivalent)	See Chapter 3

CAUTION

Ensure test area is free of foreign objects.

1. Ensure all carbon dioxide has been removed from any preserver which has been functionally tested.

CAUTION

If 3-way valve is not used, measuring device valve must be closed when air feed valve is open.

Damage may occur to oral inflation valve if air supply pressure entering the life preserver exceeds ten (10) psi during this test.

NOTE

If a suitable air source is not available, water-pumped nitrogen (BB-N-411) may be substituted.

2. Unlock oral inflation valve and insert into rubber hose. Rotate valve to air supply position and inflate chamber. Alternately position valve between measuring device, vent and air supply until proper pressure of 2.0 psig is attained.

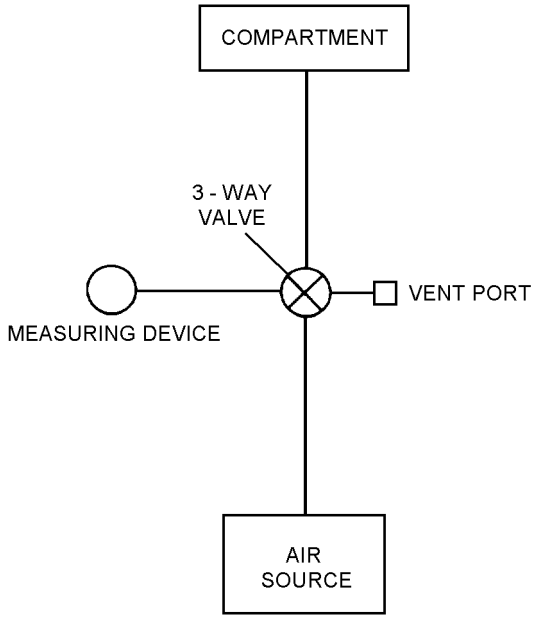

10220003

Figure 22-3. Test Fixture Schematic

3. The air supply shall be securely shut off and after a minimum of 15 minutes, the pressure shall be readjusted, if necessary, to the leakage test pressure. Record time.

4. Disconnect air supply and check for leaks. Ensure all valves are closed.

5. Record temperature and barometric pressure.

6. After a minimum of 4 hours after completing step 3, record test pressures of the single chamber. Test pressure shall not decrease to less than 1.6 psig for a life preserver chamber, from a maximum test pressure of 2.0 psig.

7. Record temperature and barometric pressure and correct test pressure for any changes in temperature and barometric pressure. Refer to tables 22-3 and 22-4.

EXAMPLE

UNCORRECTED TEST READING 1.70 PSI

	TEMP.	BARO.
START	75° F	29.90 IN. Hg
END	70° F	29.70 IN. Hg
DIFFERENCE	- 5° F	-0.20
CORRECTION	+0.155	-0.098

TEMP. CORRECTION	+ 0.155
+ BARO. CORRECTION	- 0.098
CORRECTION	+ 0.057

UNCORRECTED READING	1.700 PSI
+ CORRECTION	+ 0.057
CORRECTED READING	1.757 PSI

V0036007

Step 7 - Para 22-36

Table 22-3. Temperature Conversion Chart

Temperature Difference (°F)	Correction (psi)
1	0.031
2	0.062
3	0.093
4	0.124
5	0.155
6	0.186
7	0.217
8	0.248
9	0.279
10	0.310
Rise in temperature: subtract from gage reading. Fall in temperature: add to gage reading.	

8. If pressure of chamber is below 1.6 psig inflate to leakage test pressure and coat with a soap solution to locate leaks. Mark leak areas. Rinse preserver with fresh water, air dry and repair in accordance with procedures in paragraph 22-50.

9. Deflate preserver in accordance with paragraph 22-27.

10. Ensure that inflation valve lever is cocked. Install CO_2 cylinder in accordance with paragraph 22-41.

22-37. RECORDS UPDATING. Make necessary entries on appropriate form in accordance with OPNAVINST 4790.2 Series.

22-38. CLEANING AND SERVICING.

22-39. Cleaning and servicing consist of cleaning the life preserver and protective cover installation of the inflation valve protective cover and CO_2 cylinder and, when required, safety wiring of the inflation valve actuating lever.

22-40. CLEANING OF LIFE PRESERVER PROTECTIVE COVER/BLADDER. To clean life preservers, machine washing is preferred on protective cover. Alternate method is by hand. Remove any survival items and other detachable items and proceed as follows:

Materials Required

Quantity	Description	Reference Number
As Required	Detergent, General Purpose	MIL-D-16791 NIIN 00-282-9699
As Required	Cloth, Lint-Free, Type II	MIL-C-85043 NIIN 00-044-9281
As Required	Talc, Technical	MIL-T-50036A NIIN 01-080-9589

CAUTION

Solvents are not to be used in cleaning life preserver.

1. Prepare solution of detergent (MIL-D-16791) consisting of 1/4 to 1/2 ounce of detergent per gallon of water.

2. Apply cleaning solution to soiled area with a spray or sponge.

3. Allow solution to remain on surface for several minutes, then agitate with a soft brush or rag.

Table 22-4. Barometric Pressure Conversion Chart

Press. Diff. (inHG)	Corr. (psi)	Press. Diff. (inHG)	Corr. (psi)	Press. Diff. (inHG)	Corr. (psi)	Press. Diff. (inHG)	Corr. (psi)	Press. Diff. (inHG)	Corr. (psi)
0.01	0.005	0.16	0.078	0.31	0.152	0.46	0.225	0.61	0.299
0.02	0.010	0.17	0.083	0.32	0.157	0.47	0.230	0.62	0.304
0.03	0.015	0.18	0.088	0.33	0.162	0.48	0.235	0.63	0.309
0.04	0.020	0.19	0.093	0.34	0.167	0.49	0.240	0.64	0.314
0.05	0.025	0.20	0.098	0.35	0.172	0.50	0.245	0.65	0.319
0.06	0.030	0.21	0.103	0.36	0.176	0.51	0.250	0.66	0.323
0.07	0.035	0.22	0.108	0.37	0.181	0.52	0.254	0.67	0.328
0.08	0.040	0.23	0.113	0.38	0.186	0.53	0.260	0.68	0.333
0.09	0.045	0.24	0.118	0.39	0.191	0.54	0.265	0.69	0.338
0.10	0.049	0.25	0.123	0.40	0.196	0.55	0.270	0.70	0.343
0.11	0.054	0.26	0.127	0.41	0.201	0.56	0.275	0.71	0.348
0.12	0.060	0.27	0.132	0.42	0.206	0.57	0.279	0.72	0.353
0.13	0.064	0.28	0.137	0.43	0.211	0.58	0.284	0.73	0.358
0.14	0.069	0.29	0.142	0.44	0.216	0.59	0.289	0.74	0.363
0.15	0.073	0.30	0.147	0.45	0.221	0.60	0.294	0.75	0.368

Rise in pressure: add to gage reading.
Fall in pressure: subtract from gage reading.

4. Rinse surface thoroughly with water; wipe with a cloth or sponge. Repeat this application until surface is free from all solution.

5. Dry protective cover before use and dry bladder with a lint-free cloth (MIL-C-85043). Apply a light coating of talc (MIL-T-50036A).

22-41. INSTALLATION OF CO_2 CYLINDER. To install CO_2 cylinders, proceed as follows:

Support Equipment Required

Quantity	Description	Reference Number
1	Scale (Gram)	A-A-52021-1 NIIN 00-514-4117 or equivalent
1	Die, Cylinder Thread Chaser	1842-008-01 (CAGE 03688) NIIN 00-069-4040

Materials Required

Quantity	Description	Reference Number
1	Valve Stem and Seat Seal Kit (Note 1)	105AS100-5 (CAGE 30003) NIIN 00-498-6964

Materials Required (Cont)

Notes: 1. Seat Seal is obtained from Valve Stem and Seat Seal Kit, P/N 105AS100-5, NIIN 00-498-6964, which contains two top, two bottom, and two seat seal gaskets.

NOTE

Weight of charged cylinder will vary according to manufacturer.

1. Weigh a charged cylinder and compare the minimum stamped weight with the scale weight. Discard and replace cylinder if scale weight is 2 grams less than minimum stamped weight.

2. Refer to table 22-5 for proper configuration of life preserver inflation assembly.

3. Ensure that inflator lever is in closed position.

4. To assure a firm cylinder seat, conduct a cylinder thread count. Threaded portion of cylinder neck shall contain a minimum of seven full threads to assure a firm cylinder seat within valve body. Any cylinder found with less than seven full threads shall be discarded. See figure 22-4.

Table 22-5. LPU-31/P Life Preserver Inflation Assembly

Bladder Type	Inflator	Cylinder
LPP-1	SAF-T-PAK	MIL-C-25369 (Type I) 25-28 Grams NIIN 00-372-0585
LPP-1A	MIL-L-25370 (Type II)	MIL-C-25369 (Type II) 28-31 Grams NIIN 00-543-6693

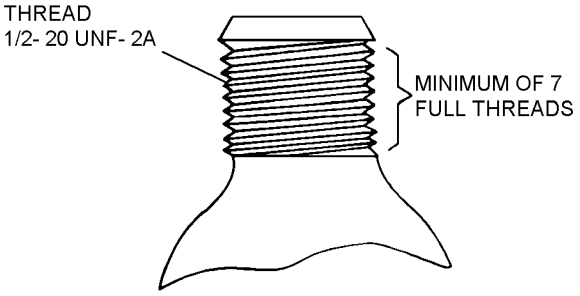

Figure 22-4. Cylinder Thread Count

CAUTION

Steel threads on CO_2 cylinder can cause damage to aluminum threads on inflator if cylinder is not carefully threaded. If binding occurs during installation of cylinder, use thread chaser die on cylinder thread to cut free excessive plating. Reinstall cylinder. If binding still occurs, replace cylinder.

5. After performing functional test, insert a new seat seal gasket. At intermediate inspection intervals, inspect condition of gasket and replace if necessary.

6. Install CO_2 cylinder into inflator body as far as hand twisting will permit.

NOTE

When replacing CO_2 cylinder to inflator, ensure that CO_2 cylinder passes through the holding patch loop.

7. Safety-wire inflator as required in accordance with paragraph 22-42.

8. Close inflation assembly protective cover and secure with snap fasteners. See figure 22-1.

22-42. SAFETY-WIRING. To safety-wire the inflation assembly, proceed as follows:

Materials Required

Quantity	Description	Reference Number
As Required	Copper Wire, Uncoated, Type S, 0.0159-inch Diameter	QQ-W-343 NIIN 00-236-9501

1. Pass a single strand of uncoated 0.0159-inch Type S copper wire through hole in inflation assembly body and through hole in actuation lever.

2. Twist the wire a minimum of four times and trim the excess.

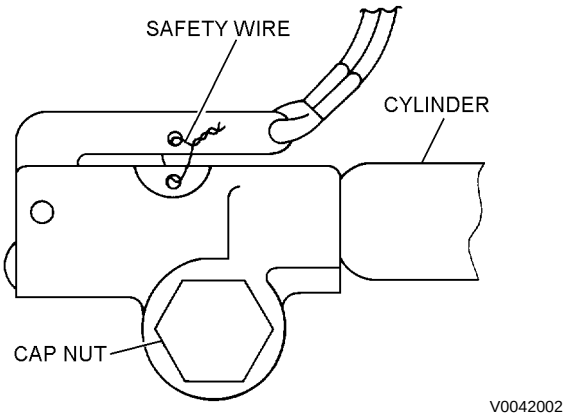

Step 2 - Para 22-42

22-43. REPAIR/REPLACEMENT.

22-44. These instructions for the repair or fabrication of various components or subassemblies of life preservers ensure that appropriate items of equipment remain in Ready For Issue (RFI) status. Reference numbers for parts which are defective, corroded or worn and require replacement are included in the applicable paragraph. Other replacement parts, such as carrying cases and personal survival equipment, are listed in the applicable table.

22-45. Replacement of easily removed assembly components such as CO_2 inflation valves and survival items are authorized in addition to repair and replacement procedures documented in this section. The life preserver shall be subjected to a functional and leakage test each time CO_2 inflation valves are removed and replaced for any reason, and each time inflation valve gaskets are replaced.

22-46. DETERMINATION OF REPAIRABILITY. Patching of holes, cuts, tears or punctures 1-inch square or less are the only repairs authorized in a life preserver bladder.

22-47. Life preserver shall be considered beyond repair for any of the following reasons:

1. Porous fabric areas on flotation bladder.

2. Leakage test failure resulting from other than repairable cut, tear or puncture.

3. Holes, cuts, tears or punctures within 1-inch of flotation bladder seams.

4. Deterioration of the polychloroprene-coated fabric caused by oil, grease, or any other foreign substance.

5. Deterioration of the polychloroprene-coated fabric caused by a heavy mildewed condition.

22-48. PROTECTIVE COVER REPAIR PROCEDURES. To repair the protective cover, proceed as follows:

Materials Required

Quantity	Description	Reference Number
As Required	Cloth, Duck, Nylon Type II, Sage Green	MIL-C-7219 NIIN 00-765-2863
	-or-	
As Required	Cloth, Plain Weave, Non-Melting, Type II, Olive Green	MIL-C-83429 NIIN 00-516-1998
As Required	Fastener Tape, Pile, Type II, Olive Green, 1-inch Width	MIL-F-21840 NIIN 00-106-5974
As Required	Fastener Tape, Hook, Type, Hook Type II, Olive Green, 1-inch Width	MIL-F-21840 NIIN 00-106-5973
As Required	Thread, Nylon, Type II, Size E, Sage Green	V-T-295 NIIN 00-204-3884
	-or-	
As Required	Thread, Nylon, High Temperature Resistant, Sage Green	MIL-T-83193 NIIN 00-405-2252

1. Remove bladder in areas being repaired.

2. Repair minor rips, tears, or abrasions in cover, using scrap material or equivalent.

3. Repair broken or loose stitching.

22-49. CEMENTING LIFE PRESERVERS. All cementing of life preservers shall be performed as follows:

Support Equipment Required

Quantity	Description	Reference Number
1	Roller, Wooden	GGG-R-00620 NIIN 00-243-9401

NOTE

Toluene shall be the primary solvent used in the fabrication or repair of this assembly. MEK may be used if toluene is not available. Always use solvents sparingly and wipe up excess solvents; do not allow to dry by evaporation.

Materials Required

Quantity	Description	Reference Number
1	Brush, Disposable	NIIN 00-514-2417
As Required	Toluene	TT-T-548 NIIN 00-281-2002
	-or-	
As Required	Methyl Ethyl Ketone (MEK)	TT-M-261 NIIN 00-281-2762
As Required	Cement, Class 3, Polychloroprene	MIL-A-5540 NIIN 00-142-9913
As Required	Talc, Technical	MIL-T-50036A NIIN 01-089-9589

WARNING

Do not use toluene or MEK near open flame, heat or electrical sparks. Avoid prolonged contact with skin or breathing of fumes. Use only in a well ventilated area.

CAUTION

Use only Polychloroprene adhesives and Polychloroprene-coated cloth patches on Polychloroprene-coated LPU-31/P flotation assembly.

NOTE

Toluene or MEK must be applied vigorously to life preserver material over three years old in order to reactivate the material prior to cementing. Pigment from the material coloring staining a cloth rubbed over the treated surface will indicate the material has been reactivated. Cement shall be applied immediately after the surface has dried.

1. Clean both surfaces to be cemented with four applications of toluene or MEK. Apply toluene or MEK with back-and-forth strokes on the first and third applications, and one-way strokes on the second and fourth applications. Allow area to dry between applications.

CAUTION

The effective active period of adhesive mixtures composed of polychloroprene and an accelerator is eight (8) hours. Do not use mixture if older than eight hours.

2. Prepare only enough mixture for 8 hours. Dispose of any remaining mixture.

3. Using a disposable brush, apply cement to completely cover surfaces to be cemented. Use long, one direction strokes and complete each surface before cement becomes tacky as the brush may pull tacky cement from the surface. Allow to dry for 10 minutes.

4. Apply a second coat of cement as in step 3. Use brush strokes perpendicular to the original direction.

5. When second coat of cement has become tacky, place pieces together. If cemented area has a cut or tear, butt edges of damage before applying patch. Roll out bubbles with a wooden roller.

6. Allow cement to cure a minimum of 48 hours.

7. Dust area with talc (MIL-T-50036A).

22-50. PATCHING LIFE PRESERVERS. Patching of life preservers shall be performed as follows:

NOTE

Life preserver is not repairable if it has holes, cuts, tears, or punctures over one-inch square.

Materials Required

Quantity	Description	Reference Number
As Required	Cloth, Life Preserver, Type I, Orange	MIL-C-19002 NIIN 00-060-9136
	-or-	
	Cloth, Life Preserver, Type I, Yellow	MIL-C-19002 NIIN 00-935-6427

CAUTION

Use only Polychloroprene adhesives and Polychloroprene-coated cloth and patches on Polychloroprene-coated LPU-31/P life preserver assemblies.

NOTE

Select patch color as near as possible to color of life preserver being repaired.

1. Cut a rounded patch 1 inch larger than damage on all sides.

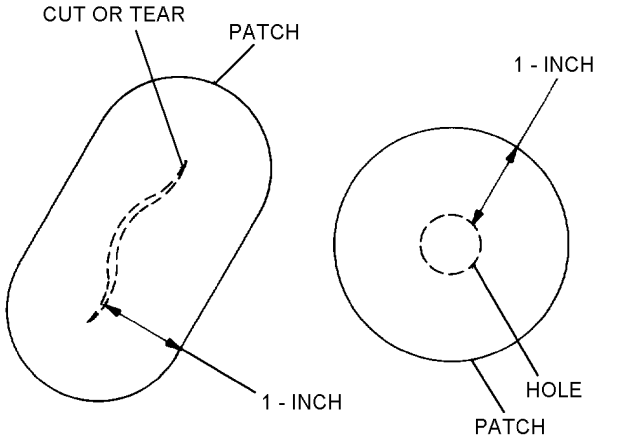

Step 1 - Para 22-50

2. Center patch over damage and trace an outline of patch on fabric.

3. Cement patch to damaged area in accordance with paragraph 22-49.

4. Dust area with talc (MIL-T-50036A).

5. Perform a leakage test.

22-51. INSPECTION RECORD PATCH.

NOTE

The 28th In-Service Management Panel meeting for Aviation Life Support Systems rescinded the requirement for the packer to sign the Inspection Record Patch on life preservers. The requirement for all other documentation remains unchanged. The reason for this change is that most history patches are unreadable and the packer's and inspector's names are documented on Aviation Crew Systems Records.

22-52. REPLACEMENT OF ORAL INFLATION VALVE. To replace the oral inflation valve, proceed as follows:

Figure 22-5 Deleted.

NOTE

Replacement of oral inflation valves can only be obtained through salvage of BCM'ed or surveyed inflatable survival equipment.

Materials Required

Quantity	Description	Reference Number
1	Valve, Oral Inflation	—
As Required	Cement, Polychloroprene	MIL-A-5540 NIIN 00-142-9913
As Required	Brush, Disposable	NIIN 00-514-2417
As Required	Toluene	TT-T-548 NIIN 00-281-2002
	-or-	
As Required	Methyl Ethyl Ketone (MEK)	TT-M-261 NIIN 00-281-2762

CAUTION

Only toluene or MEK shall be used to clean oral inflation valve and tube. Only Polychloroprene cement (MIL-A-5540, NIIN 00-142-9913) shall be used to cement oral inflation valve to oral inflation tube.

1. Carefully cut through metal clamp securing oral inflation valve to oral inflation tube, and remove metal band and oral inflation valve.

2. If the tip of the oral inflation tube was damaged during removal of valve, trim off damaged section.

3. Clean both surfaces to be cemented with toluene or MEK. Allow areas to dry.

4. Using a small disposable brush, carefully apply a small amount of Polychloroprene cement to the surfaces of the tube and the valve which are to be cemented together.

5. Immediately place oral inflation valve into oral inflation tube. Oral inflation valve should be inserted up to valve shoulder. Inspect for proper application/cement.

6. Tightly wrap the cemented portion of the oral inflation tube with cord or wire and allow to cure for 48 hours before removing wrap.

7. Perform leakage test in accordance with paragraph 22-34.

22-53. RECEMENTING BLADDER SEAMS (TYPE 2, MIL-L-25370). This repair shall be performed only if a polychloroprene flotation bladder does not leak, that is, if only outer seam around bladder is split or separating. To recement on open seam proceed as follows:

1. If seam is not leaking, recement open seam in flotation bladder in accordance with paragraph 22-49.

2. Perform a leakage test in accordance with paragraph 22-34.

NOTE

If bladder exhibits leakage from seam, bladder cell has ruptured. Dispose of life preserver after usable parts have been salvaged.

22-54. REPLACEMENT OF LANYARD CORD. To replace lanyard cord used with MIL-L-25370, Type 2 inflation valves, see paragraph 22-55. To replace lanyard cord used with SAF-T-PAK inflation valves, proceed as follows:

Materials Required

Quantity	Description	Reference Number
15 inches	Cord, Nylon, Type I (color optional)	MIL-C-5040 NIIN 00-014-6699

1. Carefully remove carbon dioxide cylinder from the inflator assembly.

2. If desired, remove nut and rubber gasket retaining the inflator and remove inflator and lanyard assembly.

3. Cut lanyard to be replaced and discard along with the two brass clips.

4. Fold the 15-inch length of cord in half, pass folded end through hole in end of inflator lever and tie the cord strands with a lark's head knot, followed by binder knot.

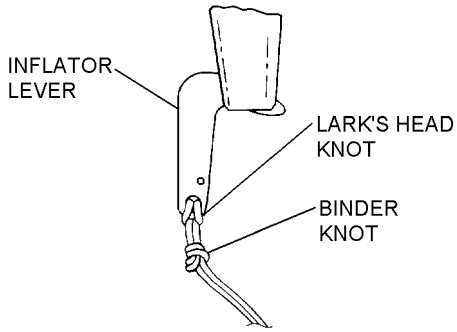

V0054004

Step 4 - Para 22-54

5. Thread the cord strands through the top of the knob (one strand through each hole) and tie a binder knot three inches from the lever end.

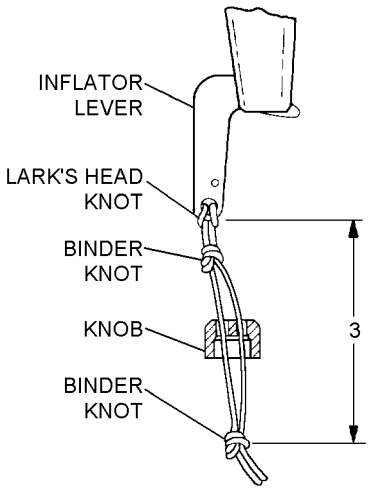

V0054005

Step 5 - Para 22-54

6. Slide knob down to single knot and tie a binder knot on the top of the knot to secure it in position.

NOTE

Ensure 2-inch length of lanyard exits from the end of the lever to the top of the knob.

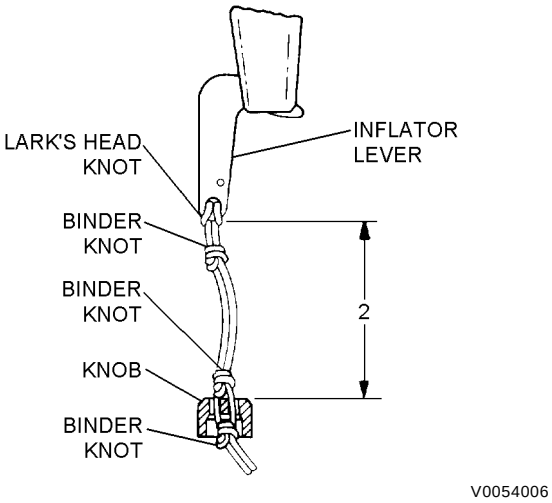

Step 6 - Para 22-54

7. Install inflator and gaskets, nut and CO_2 cylinders.

22-55. REPLACEMENT OF LANYARD CORD (SAF-T-PAK). To replace lanyard cord used with SAF-T-PAK inflation valve, see paragraph 22-54. To replace lanyard cord used with MIL-L-25370, Type 2 inflation valve, proceed as follows:

Materials Required

Quantity	Description	Reference Number
16 inches	Cord, Nylon, Type I (color optional)	MIL-C-5040 NIIN 00-014-6699

1. Carefully remove carbon dioxide cylinder from the inflator assembly.

2. If desired, remove nut and rubber gasket retaining the inflator and remove inflator and lanyard assembly.

3. Cut lanyard to be replaced and discard along with the two brass clips.

4. Fold the 16-inch length cord in half, pass folded end through hole in end of inflator lever and tie the cord strands with a lark's head knot, followed by a binder knot.

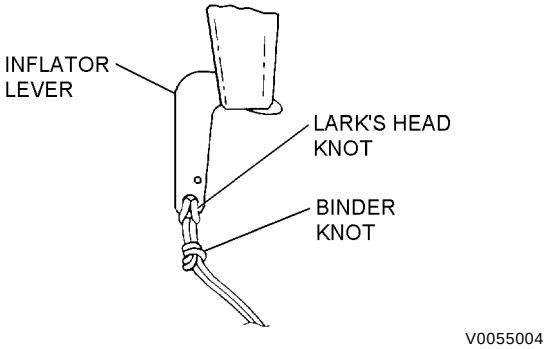

Step 4 - Para 22-55

5. Thread the cord strands through the top of the knob (one strand through each hole) and tie a binder knot 4 inches from the lever end.

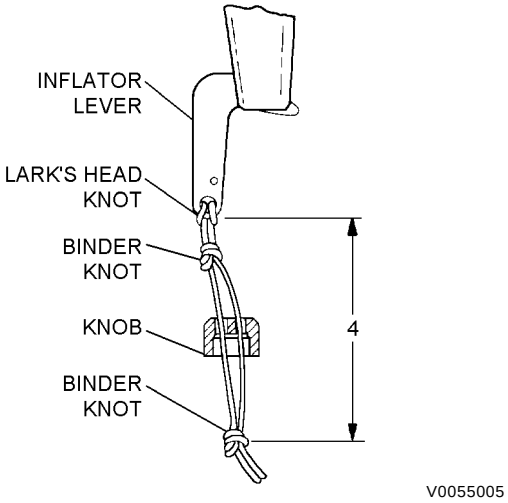

Step 5 - Para 22-55

6. Slide knob down to single knot and tie a binder knot on the top of the knob to secure it in position.

NOTE

Ensure 3-inch length of lanyard exits from end of the lever to the top of the knob.

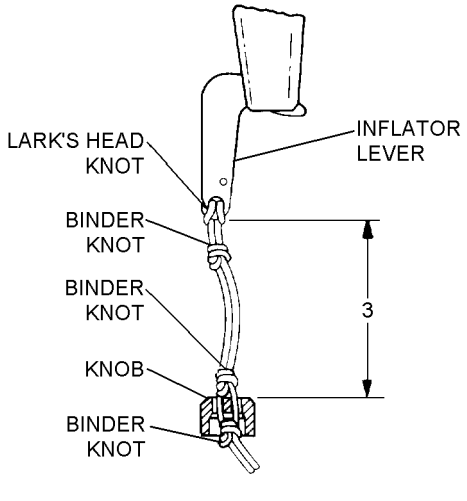

Step 6 - Para 22-55

7. Install inflator and gaskets, nut and CO_2 cylinders.

22-56. REPLACEMENT OF DEFECTIVE SNAP FASTENERS. To replace defective snap fasteners on inflation assembly protective flap, proceed as follows:

Materials Required

Quantity	Description	Reference Number
1	Cap, Snap Fastener	MS27981-1B NIIN 00-276-4954
1	Socket, Snap Fastener	MS27981-3B NIIN 00-276-4966
1	Stud, Snap Fastener	MS27981-4B NIIN 00-901-9660
2	Post, Snap Fastener	MS27981-5B NIIN 00-250-6858

NOTE

When replacing a defective snap fastener, the mating snap fastener must also be replaced.

1. Using end cutters, remove damaged snap fastener stud and mating socket from eyelets and buttons

2. Install new snap fasteners as necessary.

22-57. REPAIR OF CORRODED CO_2 INFLATION VALVE MIL-L-25370. To repair CO_2 inflation valve MIL-L-25370, Type II, proceed as follows:

Materials Required

Quantity	Description	Reference Number
As Required	Lubricant, Silicone	(CAGE 71984) NIIN 00-975-0712
1	Valve Stem and Seat Seal Kit (Note 1)	105AS100-5 (CAGE 30003) NIIN 00-498-6964
As Required	Cloth, Emery No. 240	—
1	Valve, Inflation	MIL-L-25370 Type II
As Required	Abrasive Mat	MIL-A-9962 NIIN 00-967-5093
As Required	Corrosion Preventive Compound (Amiguard) Type I	MIL-C-85054 NIIN 00-041-1596

Notes: 1. Valve Stem and Seat Seal Kit, P/N 105AS100-5, NIIN 00-498-6964, contains two top, two bottom, and two seat seal gaskets.

1. Remove CO_2 cylinder from valve and retain. Discard seat seal gasket.

2. Remove inflation valve from preserver. Discard two gaskets on valve stem.

3. Remove grooved taper pin (retaining lever) from inflation valve, using awl and mallet. See figure 22-6.

4. Remove lever, spring, and piercing pin. If spring is broken or corroded, replace entire valve.

5. If piercing pin or actuating lever is corroded, remove corrosion with abrasive mat. If abrasive mat is ineffective, use 240 grit emery cloth. Do not damage O-ring on piercing pin. Wipe off any dirt or moisture from actuating lever and apply a thin coat of MIL-C-85054 and allow to dry.

6. Clean residue from actuating lever on piercing pin. Lightly coat base of piercing pin with silicone lubricant.

7. Reassemble inflation valve and operate actuating lever three or four times. Ensure that lever and piercing pin move freely.

8. If piercing pin and lever do not move freely, obtain replacement valve.

9. Reinstall inflation valve on life preserver using new gaskets.

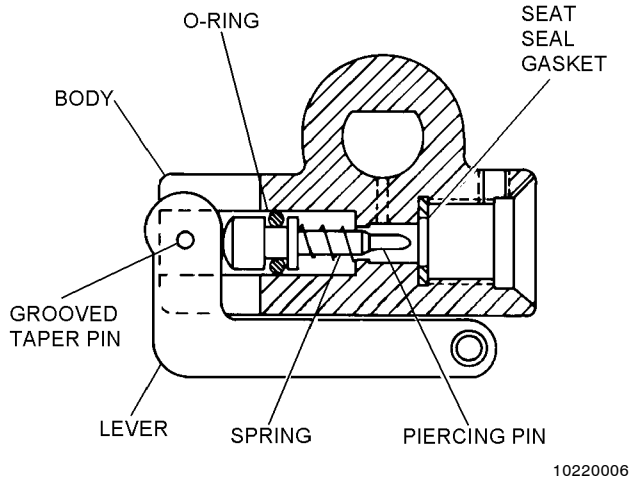

Figure 22-6. CO_2 Inflation Assembly

10. Install cap nut onto valve stem and torque to a value of 8 ±1 in-lb.

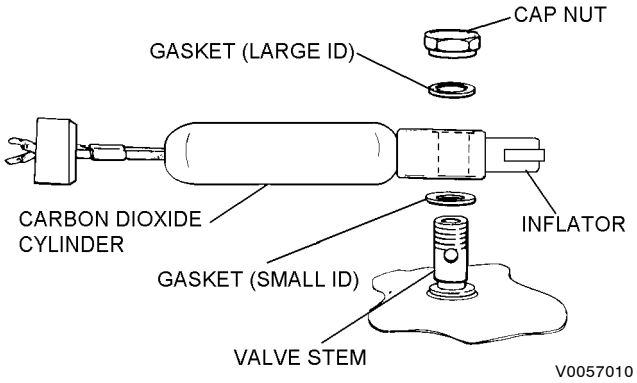

Step 10 - Para 22-57

11. Reinstall CO_2 cylinder using new seat seal gasket.

22-58. REPLACEMENT OF TOP AND BOTTOM GASKETS. To replace the top and bottom gaskets on the inflator, proceed as follows:

Support Equipment Required

Quantity	Description	Reference Number
1	Wrench, 9/16-inch	—

Materials Required

Quantity	Description	Reference Number
1	Valve Stem and Seat Seal Kit (Note 1)	105AS100-5 (CAGE 30003) NIIN 00-498-6964

Notes: 1. Valve Stem and Seat Seal Kit, P/N 105AS100-5, NIIN 00-498-6964, contains two top, two bottom, and two seat seal gaskets.

1. Remove cap nut and top gasket from inflator.

WARNING

Ensure that gaskets are properly positioned. The top gasket has a larger internal diameter than the bottom gasket.

2. Remove inflator and replace bottom gasket.

3. Carefully place inflator onto valve stem.

4. Install top gasket onto valve stem.

5. Tighten cap nut onto valve stem and torque to a value of 8 ±1 in-lb.

6. Perform functional and leakage tests on life preserver cell that was repaired. Refer to paragraphs 22-26 and 22-34.

22-59. REPLACEMENT OF CHECK VALVE ASSEMBLY. To replace a defective check valve assembly, proceed as follows:

Materials Required

Quantity	Description	Reference Number
1	Valve, Pneumatic Inflator (Check Valve Assembly) (Note 1)	Schrader-Bridgeport P/N 8457500047

Notes: 1. Schrader-Bridgeport P/N 8457500047 must be open purchased from:
Schrader-Bridgeport Intl
205 Frazier Rd
P.O. Box 668
Altivista, VA 24517
Phone (804) 369-8875

Support Equipment Required

Quantity	Description	Reference Number
1	Tool, Valve Core	8769A or equivalent (CAGE 27783) NIIN 01-354-5423
1	Wrench, Torque	—

1. If not available, fabricate a valve core tool as shown in Chapter 3.

2. Remove inflator cap nut.

3. Insert valve core tool and unscrew check valve from valve stem.

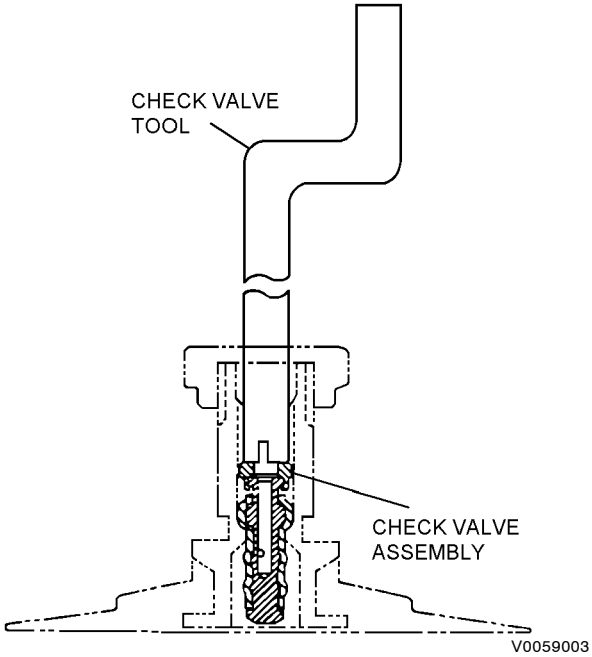

Step 3 - Para 22-59

4. Insert new check valve in valve stem and tighten with valve core tool hand tight.

5. Replace cap nut and torque to a value of 8 ±1 in-lb.

6. Perform a functional and leakage test on life preserver cell that was repaired. Refer to paragraphs 22-26 and 22-34.

22-60. REPAIR/FABRICATION OF LIFELINE AND TOGGLE ASSEMBLY. To repair or fabricate life line and toggle assembly, proceed as follows:

Materials Required

Quantity	Description	Reference Number
36-inch length	Cord, Nylon, Type III	MIL-C-5040 NIIN 00-240-2146
1	Dowel, hardwood 2 1/2-inch x 5/8-inch diameter	—
1	3/16-inch drill	—
As Required	Thread, Nylon Type II, Size E	V-T-295 NIIN 00-204-3884

1. Drill a 3/16-inch diameter hole in the center of a 2 1/2-inch x 5/8-inch diameter wooden dowel.

2. Pass one end of a 36-inch length of Type III nylon cord through the 3/16 inch diameter hole in center of wooden dowel. Secure cord with an overhand knot on each side of dowel.

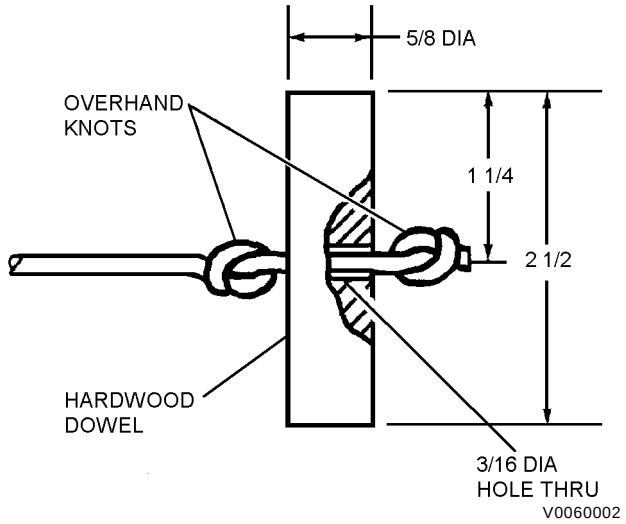

Steps 1 and 2 - Para 22-60

3. Place a 1 1/4-inch diameter bowline loop in nylon cord 8 1/2 inches from center of wooden dowel.

4. Attach free end of Type III nylon cord to belt using a bartack in three places.

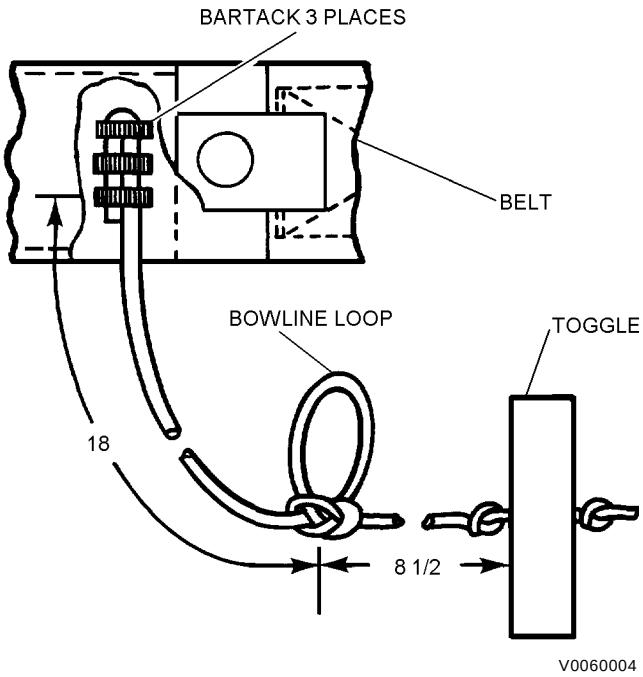

Steps 3 and 4 - Para 22-60

22-61. FABRICATION OF LPU-31/P PROTECTIVE COVER ASSEMBLY. To fabricate the protective cover assembly, proceed as follows:

Materials Required

Quantity	Description	Reference Number
31 X 36 inches	Cloth, Duck, Nylon Type II, Sage Green	MIL-C-7219 NIIN 00-765-2863
	-or-	
	Cloth, Plain Weave, Non-Melting, Type II, Olive Green	MIL-C-83429 NIIN 00-516-1998
44 inches	Fastener Tape, Pile, Type II, Olive Green, 1-inch Width	MIL-F-21840 NIIN 00-106-5974
44 inches	Fastener Tape, Hook, Type II, Olive Green, 1-inch Width	MIL-F-21840 NIIN 00-106-5973
As Required	Thread, Nylon, Type II, Size E, Sage Green	V-T-295 NIIN 00-204-3884
	-or-	
	Thread, Nylon, High Temperature Resistant, Sage Green	MIL-T-83193 NIIN 00-405-2252

1. Construct patterns and assemble using figures 22-7 through 22-11.

2. Cut fabric pieces and sear all edges.

3. Cut the following pieces of 1-inch width hook and pile tape and sear ends.

2 pieces each 13 3/4 inches long.
4 pieces each 3 inches long.
1 piece each 2 inches long.
2 pieces each 1 1/4 inches long.

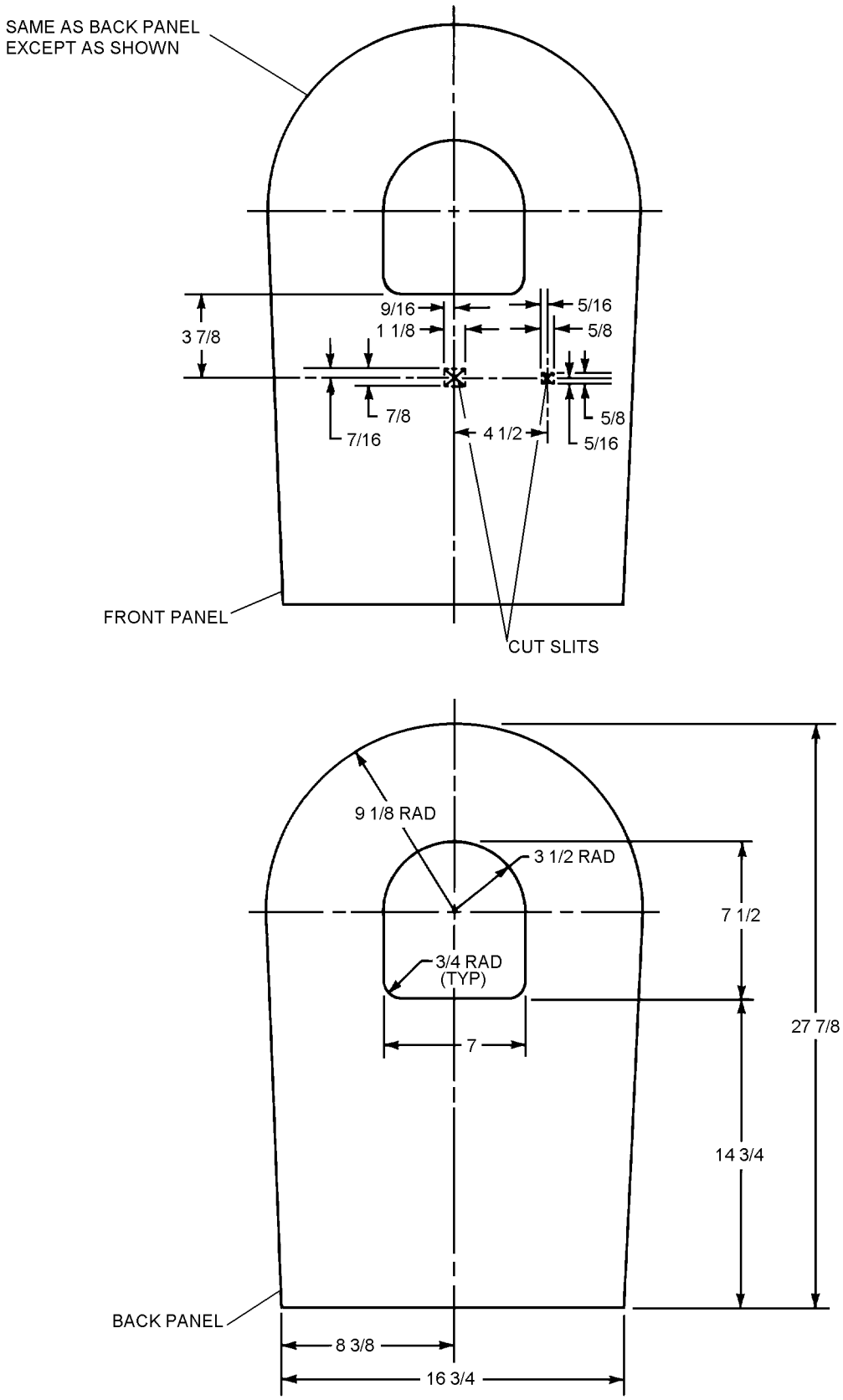

10220007

Figure 22-7. Front and Back Panels

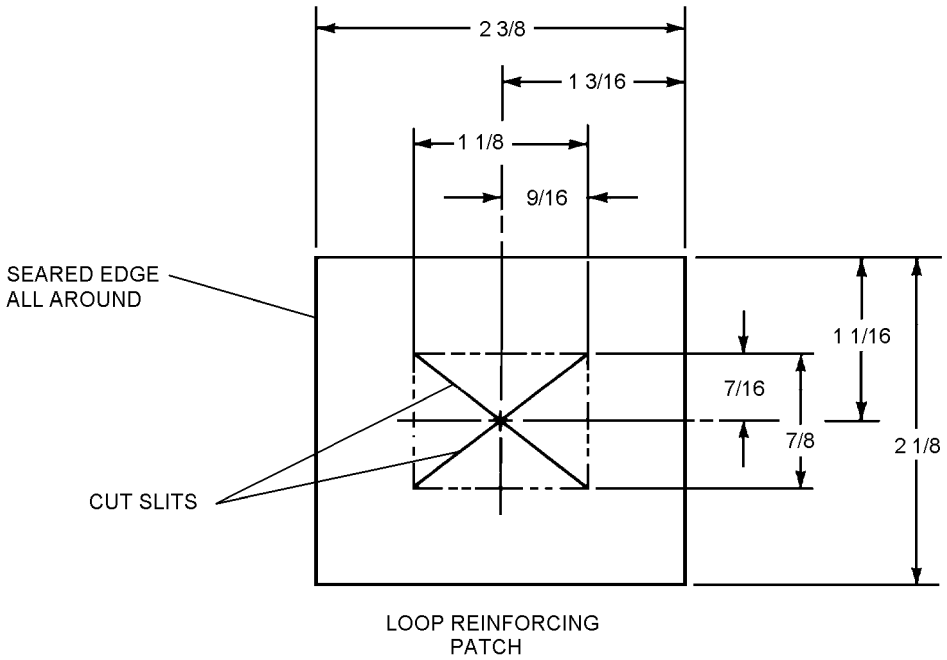

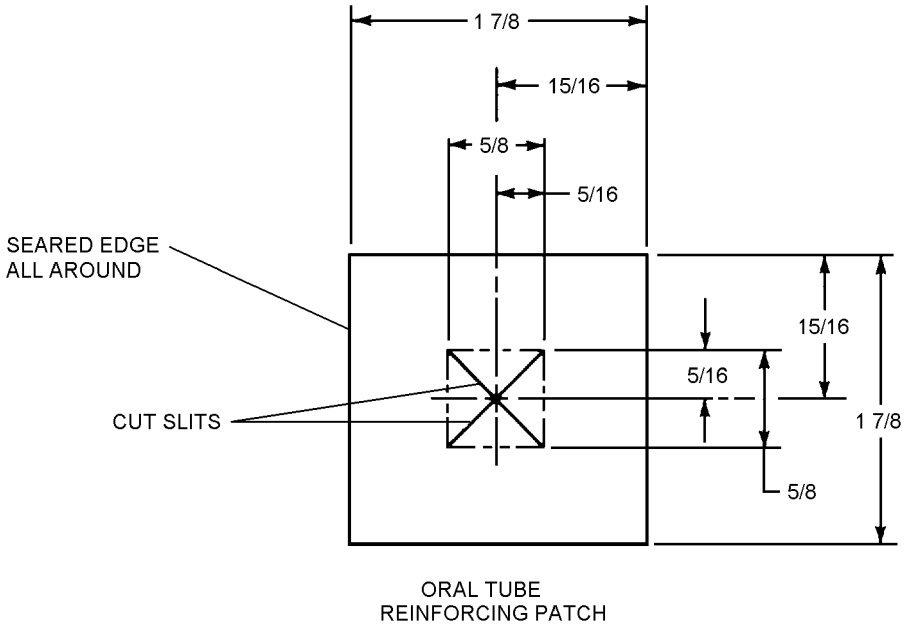

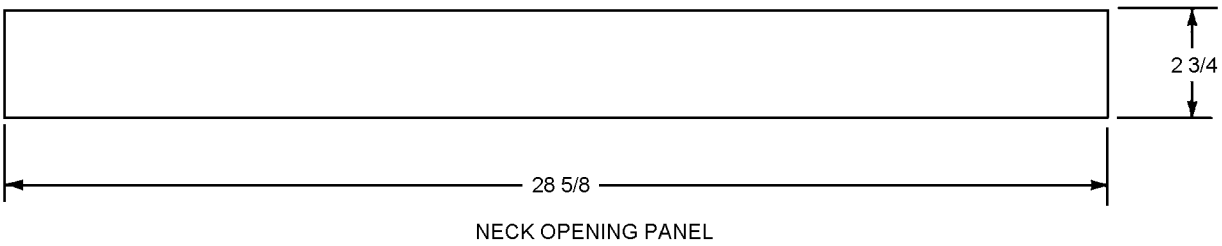

10220008

Figure 22-8. Flat Patterns

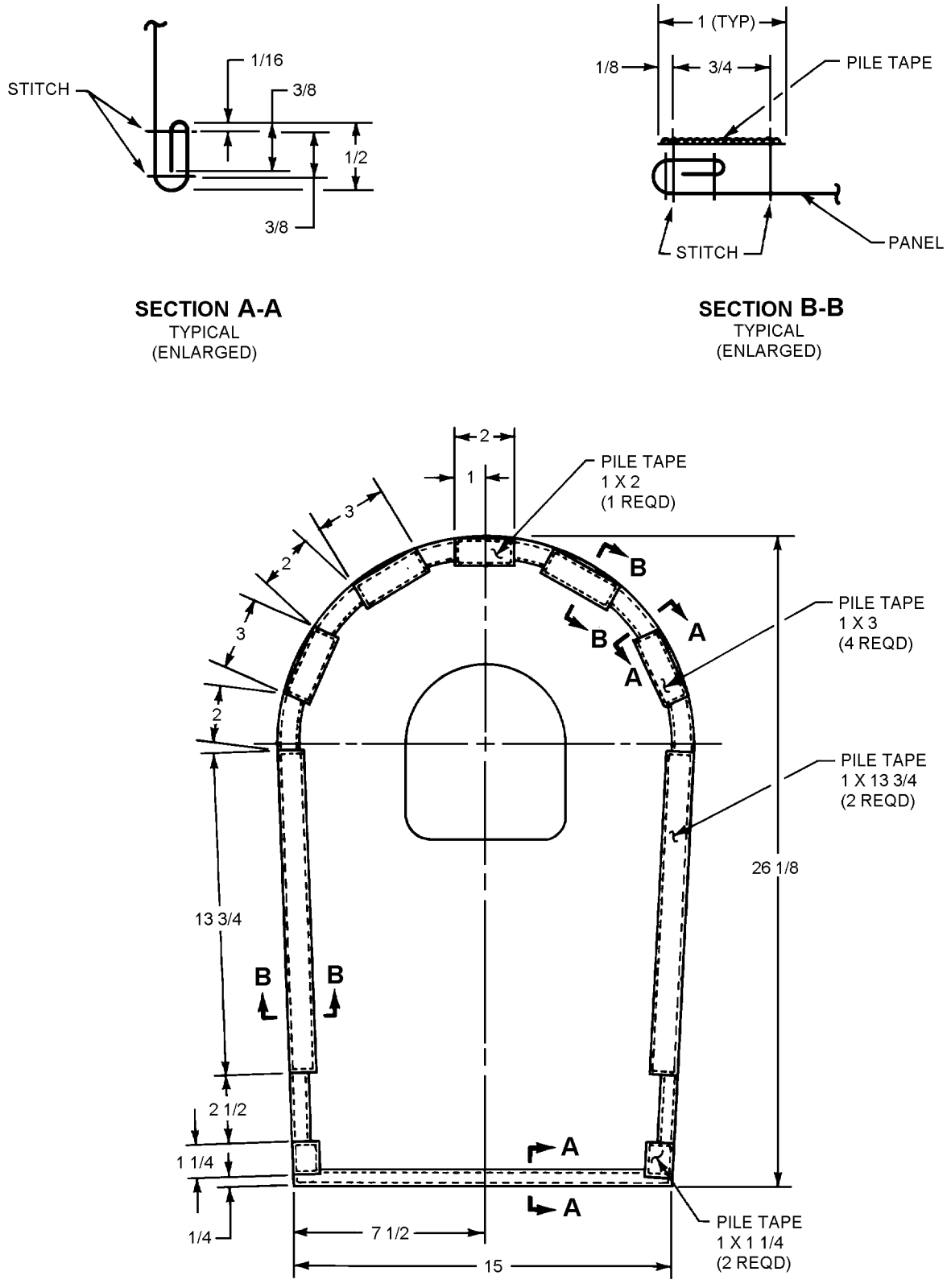

Figure 22-9. Back Panel Assembly (Inside Shown)

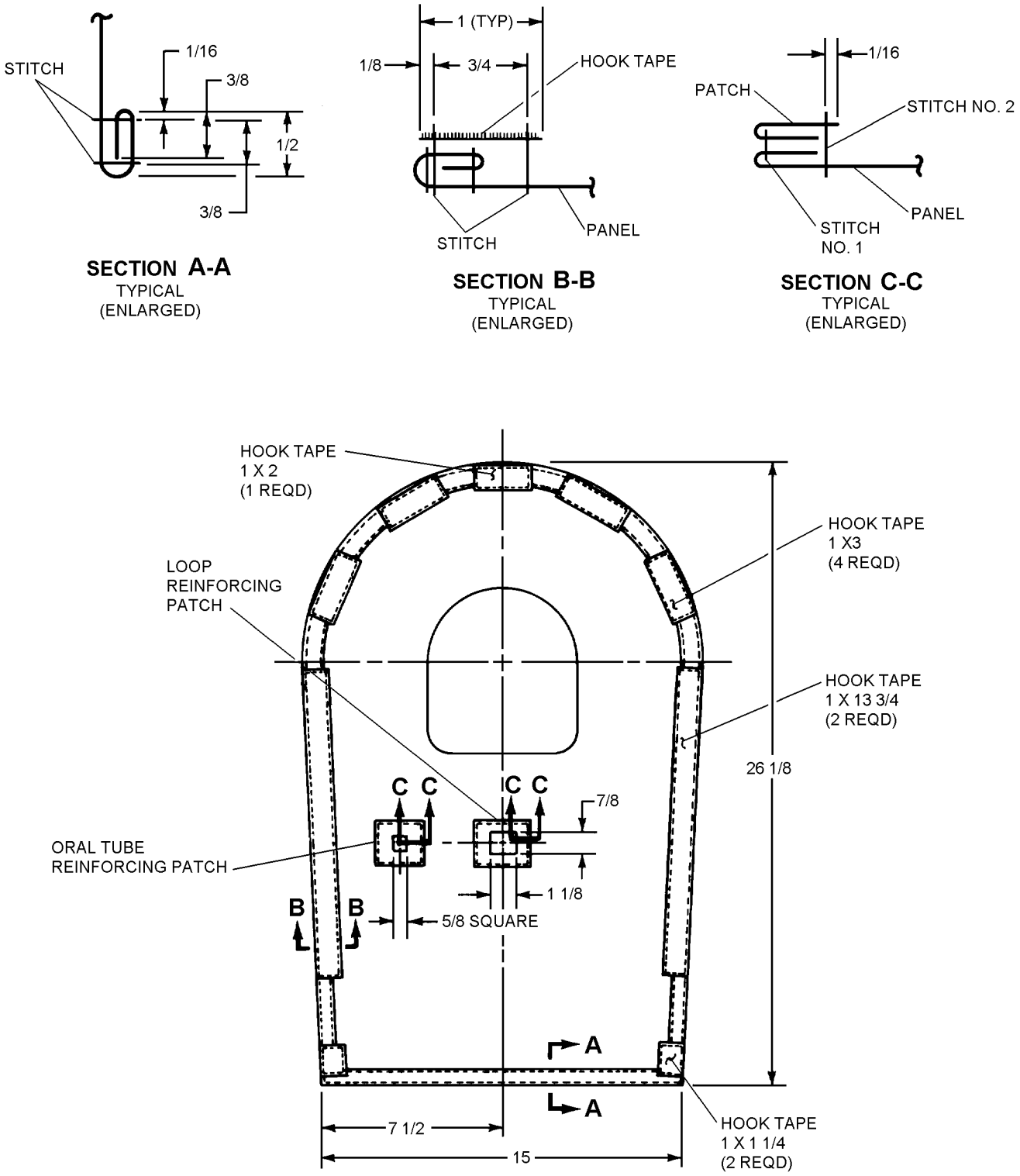

Figure 22-10. Front Panel Assembly (Inside Shown)

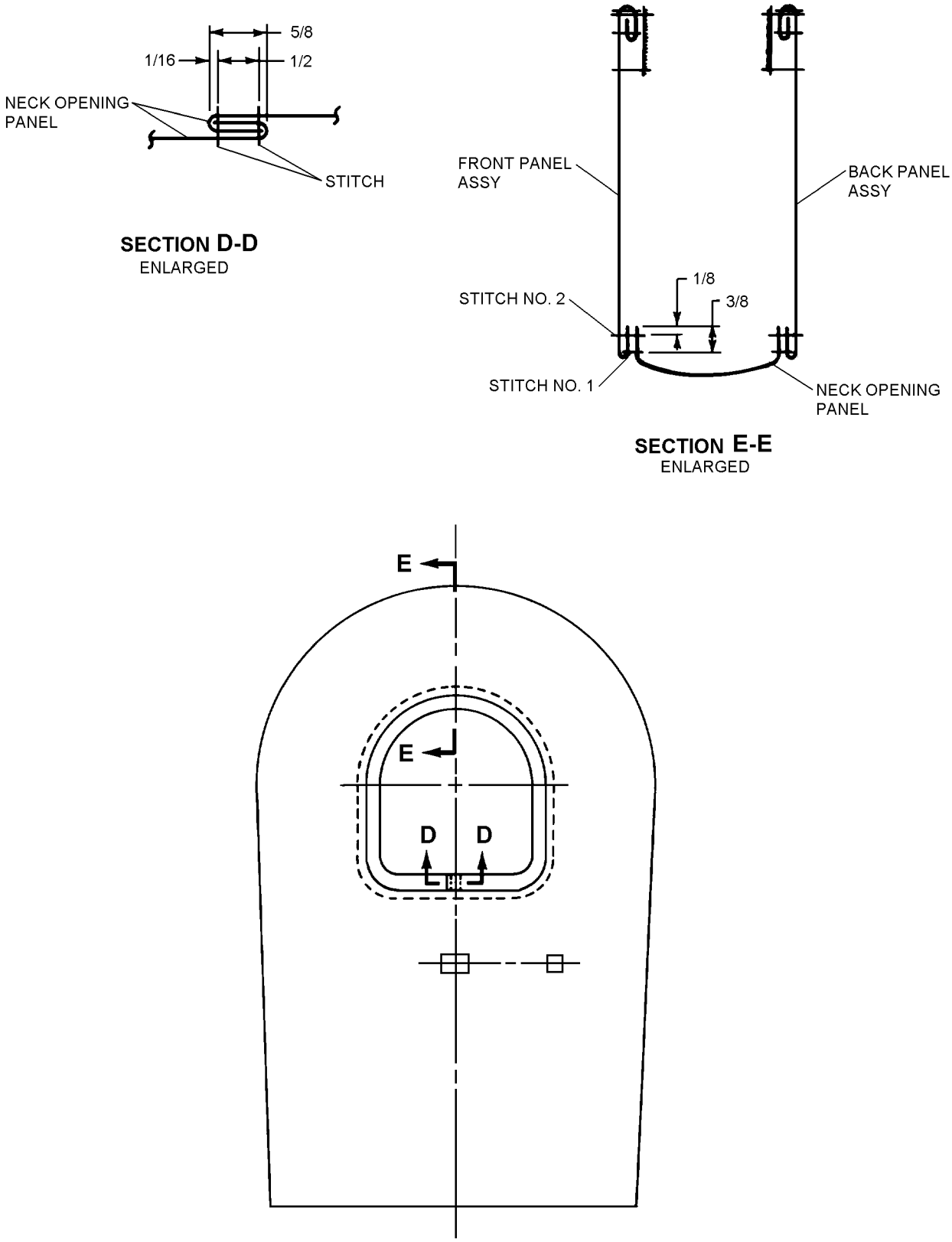

Figure 22-11. Cover Assembly

NOTE

All stitching shall be performed using stitch type 301. Backstitch at least 1/2 inch on all rows of stitching.

4. Stitch outer edges of front and back panels as shown in figure 22-9, section A-A, and figure 22-10, section A-A.

5. Stitch pile tape to inside of back panel as shown in figure 22-9, section B-B.

6. Stitch hook tape to inside front panel as shown in figure 22-10, section B-B.

7. Position oral inflation tube and loop reinforcing patches on the outside of the front panel. Stitch around openings. Push patches through slits to opposite side of panel. Turn under edges and stitch close to inside and outside edges. Refer to figure 22-10, section C-C.

8. Join ends of the neck opening panel as shown in figure 22-11, section D-D.

9. Attach neck opening panel to front and back panels as shown in figure 22-11, section E-E. Ensure that hook and pile tape sections mate properly.

NOTE

Prior to installing cover assembly on flotation assembly, remove the following items from the life preserver and retain for spare parts.

Storage Container
Pouch
Sea Dye Marker
Whistle
Survivor Locator Light

10. Identify protective cover by adding new life preserver identification, LPU-31/P ASSY., using waterproof black ink. Identification shall be centered on the front of the protective cover, with the tops of the letters 2 inches below the opening for the oral inflation tube.

11. To install the flotation assembly in the protective cover, pull the oral inflation tube through the opening in the cover and pass the oral inflation tube through the loop. Close the container by pressing the hook and pile tapes together.

22-62. PACKING PROCEDURE FOR LPU-31/P LIFE PRESERVER ASSEMBLY.

22-63. The LPU-31/P Life Preserver Assembly shall be packed by qualified personnel at the lowest level of maintenance possible. For cleaning and servicing of the life preserver assembly refer to paragraph 22-38.

22-64. To pack the LPU-31/P Life Preserver Assembly, proceed as follows:

1. Ensure that preserver, cover and belt have been inspected in accordance with paragraph 22-15.

2. Ensure that belt is inserted through retaining channel on rear of flotation assembly.

3. Install flotation assembly in protective cover and secure hook and pile tapes.

NOTE

Step 4 should be performed only after scheduled inspection or maintenance.

4. Make necessary entries on appropriate form in accordance with OPNAVINST 4790.2 Series.

Section 22-4. Illustrated Parts Breakdown (IPB)

22-65. GENERAL.

22-66. This section lists and illustrates the assemblies and detail parts of the LPU-31/P Life Preserver.

22-67. The Illustrated Parts Breakdown should be used during maintenance when requisitioning and identifying parts.

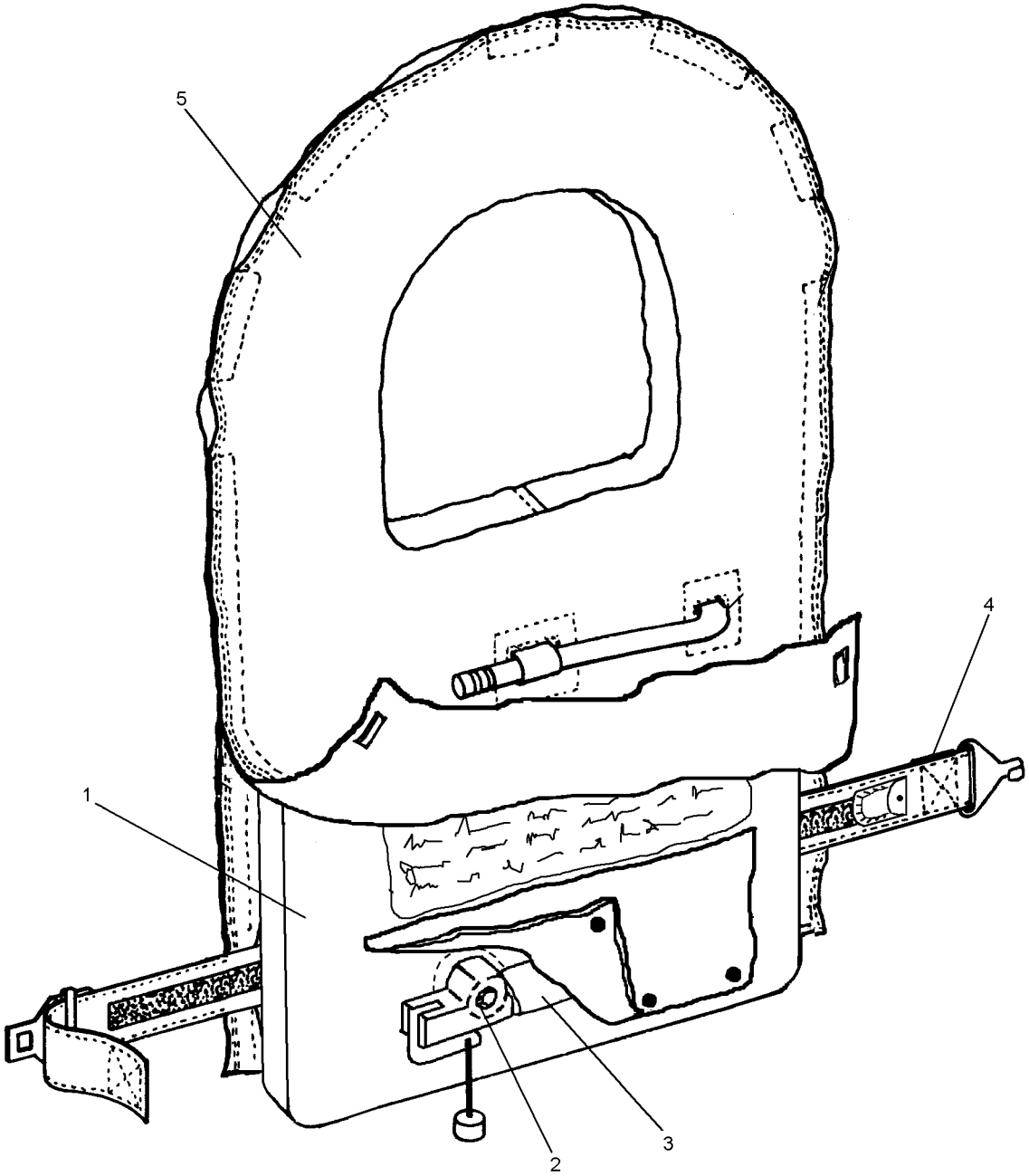

10220012

Figure 22-12. LPU-31/P Life Preserver Assembly, Illustrated Parts Breakdown

Figure and Index Number	Part Number	Description 1 2 3 4 5 6 7	Units Per Assembly	Usable On Code
22-12	No Number	LPU-31/P LIFE PRESERVER ASSEMBLY	REF	
-1	36H1336-1	. LIFE PRESERVER, LPP-1, Inflatable	1	A
	68A94D2-1	. LIFE PRESERVER, LPP-1A, Inflatable	1	B
-2	SAF-T-PAK	. . INFLATION VALVE ASSEMBLY . . . . . (See Note 1)	1	A
	MIL-L-25370	. . INFLATION VALVE ASSEMBLY . . . . . (Type II)	1	B
-3	NIIN 00-372-0585	. . . CO_2 CYLINDER, 25-28 Grams . . . . . (MIL-C-25369, Type I)	1	A
	NIIN 00-543-6693	. . . CO_2 CYLINDER, 28-31 Grams . . . . . (MIL-C-25369, Type II)	1	B
-4	68A94D4-1	. . BELT ASSEMBLY	1	
-5	No Number	. PROTECTIVE COVER	1	
	NOTE: 1. SAF-T-PAK inflation assembly no longer carried by supply. Use until no longer serviceable and replace with MIL-L-25370 (Type II).			

NUMERICAL INDEX

Part Number	Figure and Index Number	SM&R Code
LPU-31/P LPA	22-12	PAOZZ
MIL-L-25370	22-12-2	PAOZZ
NIIN 00-372-0585	22-12-3	PAOZZ
NIIN 00-543-6693	22-12-3	PAOZZ
PROTECTIVE COVER	22-12-5	MGOGG

Part Number	Figure and Index Number	SM&R Code
SAF-T-PAK	22-12-2	
36H1336-1	22-12-1	PAOGG
68A94D2-1	22-12-1	PAOGG
68A94D4-1	22-12-4	PAOZZ

THIS PAGE INTENTIONALLY LEFT BLANK.

CHAPTER 23

POUCH TYPE LIFE PRESERVER ASSEMBLY

Section 23-1. Description

23-1. GENERAL.

23-2. The Pouch Type Life Preserver Assembly is authorized for use by all troop passengers on Marine Corps helicopters for sea survival situations.

23-3. CONFIGURATION.

23-4. The Pouch Type Life Preserver Assembly weighs two pounds and provides a minimum of 29 pounds of buoyancy. The Pouch Type Life Preserver Assembly consists of a single compartment flotation assembly, an inflation assembly, belt, hoisting strap and a pouch. Survival items included with life preserver are listed in table 23-1. To make up the Pouch Type Life Preserver Assembly, all required components not supplied with the preserver must be requisitioned.

CAUTION

Use only Polychloroprene adhesives and Polychloroprene-coated cloth and patches on Polychloroprene-coated Pouch Type life preserver assemblies.

23-5. The flotation assembly is constructed of polychloroprene-coated nylon cloth. It is equipped with an oral inflation valve, a valve stem, emergency signal light attachment loop, a belt retainer and inflation assembly protective flap. See figure 23-1.

23-6. The rubber-coated nylon cloth pouch contains the flotation assembly and survival items. The waist belt consists of cotton webbing, a buckle and two slide adjusters. The hoisting strap attached to the waist buckle consists of nylon webbing and one slide adjuster. The belt secures the flotation assembly and pouch to wearer by means of the belt loop on the flotation assembly and the slots in the back of the pouch. The lifeline assembly tied to the belt consists of a wooden toggle and line and is used to secure survivors together while they are in the water. When not in use, the lifeline is wrapped around the wooden toggle and stowed in the pouch with other survival items.

23-7. The inflation assembly consists of a Type I, 25-28 gram CO_2 cylinder and an inflation valve. The inflation assembly is connected to the valve stem on the front of the flotation assembly. The valve stem is equipped with a check valve which prevents leakage.

23-8. APPLICATION.

23-9. The Pouch Type Life Preserver Assemblies are authorized for use by all troop passengers on Marine Corps helicopters. The LPU-32/P is an authorized substitute for the Pouch Type Life Preserver.

23-10. FUNCTION.

23-11. The Pouch Type Life Preserver is manually inflated by pulling the inflation assembly lanyard down. In an emergency situation, the oral inflation valve should be used to top-off an inflated preserver, maintain inflation of a leaky preserver or to inflate a preserver when the inflation assembly malfunctions or fails. The oral inflation valve is also used to inflate a preserver with air during an inspection test and to deflate a preserver in preparation for packing.

NOTE

The pouch must be opened and the flotation assembly unrolled prior to inflation through the oral inflation valve or inflation assembly.

23-12. DONNING PROCEDURES.

23-13. To don the Pouch Type Life Preserver, refer to figure 23-2.

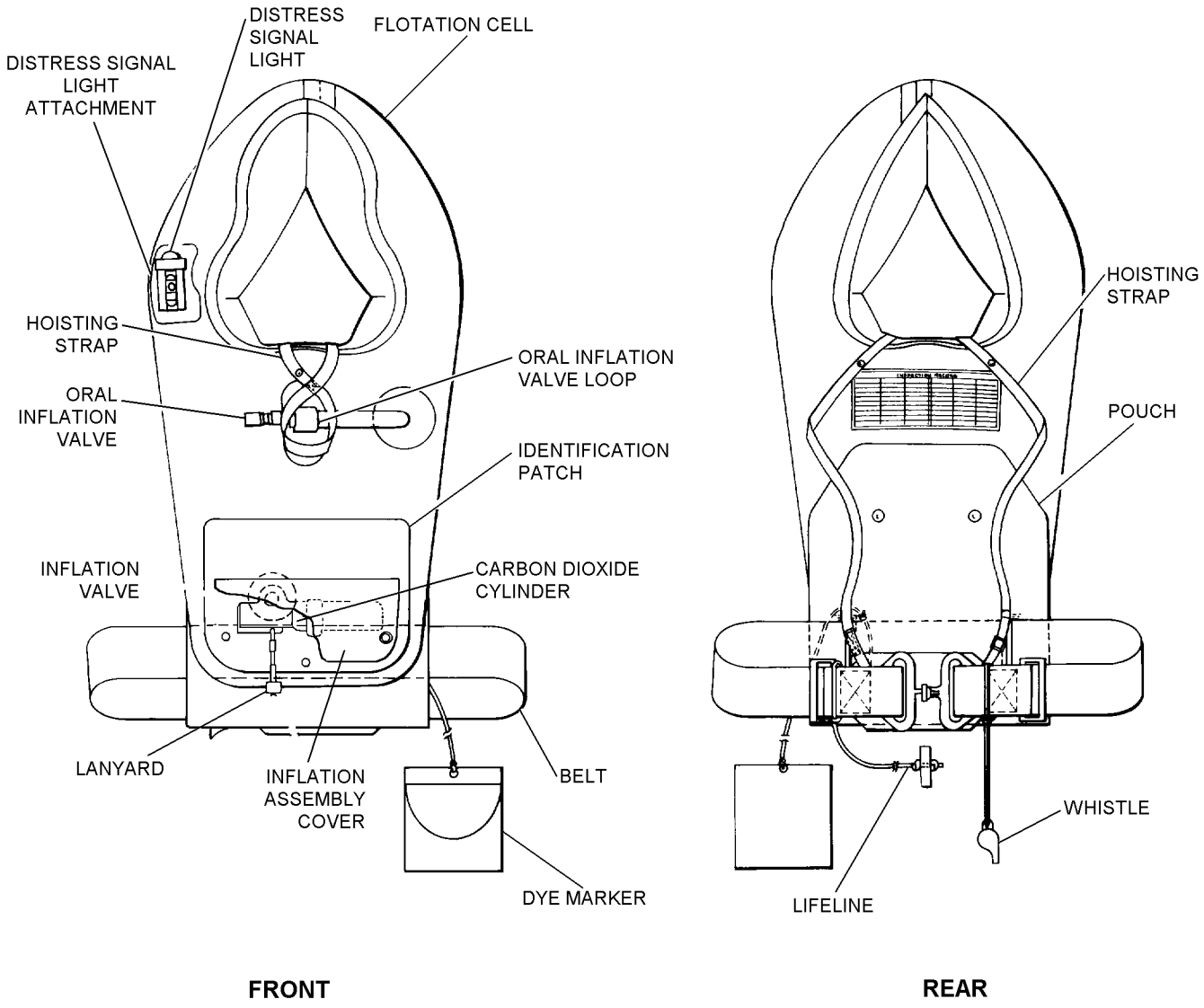

10230001

Figure 23-1. Pouch Type Life Preserver Assembly, Parts Nomenclature

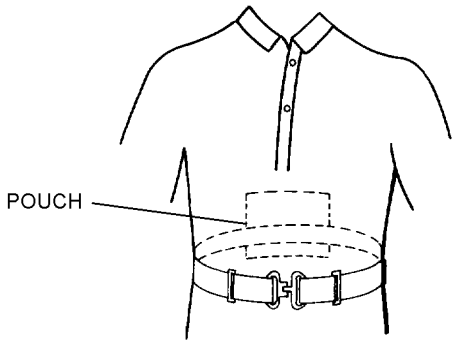

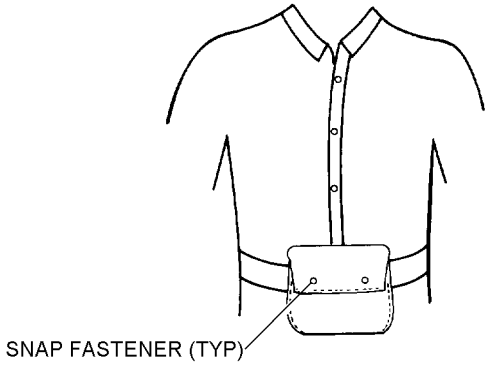

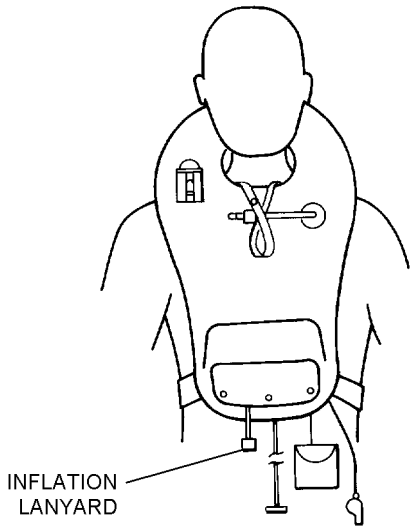

1. FASTEN BELT BUCKLE IN FRONT WITH POUCH IN REAR.
2. ADJUST BELT TO SIZE.
3. ROTATE POUCH TO FRONT.
4. OPEN SNAP FASTENERS ON POUCH AND UNFOLD PRESERVER.
5. PLACE DEFLATED PRESERVER OVER HEAD.
6. LIFT LOWER END OF PRESERVER OUT OF POUCH.
7. INFLATE PRESERVER BY PULLING INFLATION LANYARD DOWN.

10230002

Figure 23-2. Donning Procedure

Table 23-1. Pouch Type Survival Items

Description	Quantity Required	Reference Number	NIIN	SM&R Code
Whistle, Type II (Note 1)	1	MIL-W-1053	00-254-8803	PAOZZ
Dye Marker (Note 1)	1	MIL-S-17980	00-270-9986	PAOZZ
Distress Signal Light (Type II) (Note 1) (Note 2)	1	MIL-L-573B	00-255-0166	PAOZZ
Light, Chemiluminescent (Note 2)	1	P/N 9-27058	01-086-8077	PAOZZ

Notes:
1. Items are included in accessory kit NIIN 00-025-9160.
2. Chemical light is authorized and shall be the preferred light. Distress signal light may be used if chemical light is not available.
3. The Passenger Helicopter Aircrew Breathing Device System (PHABD) is authorized for use on the Pouch Type Preserver (PTP) for Marine troop passengers during flights over water. Refer to NAVAIR 13-1-6.5 for attachment and maintenance procedures.

Section 23-2. Modifications

23-14. GENERAL.

23-15. There are no authorized modifications to the pouch type life preserver at this time. Common repairs and fabrications to maintain serviceability are listed in table 23-2.

Table 23-2. Pouch Type Common Repairs and Fabrications

Description of Repair or Fabrication	Paragraph Number
Determination of Repairability	23-50
Cementing Life Preserver	23-52
Patching Life Preserver	23-53
Replacement of Oral Inflation Valve	23-55
Replacement of Lanyard Cord	23-56
Replacement of Defective Plastic Snap Fastener with Metal Snap Fasteners	23-57
Repair of Corroded CO_2 Inflation Valve	23-58
Replacement of Top and Bottom Gaskets	23-59
Replacement of Check Valve Assembly	23-60
Fabrication of Hoisting Strap	23-61
Repair/Fabrication of Lifeline and Toggle Assembly	23-62

Section 23-3. Maintenance

23-16. GENERAL.

23-17. This section contains information on inspection, disassembly repair/replacement, testing, and reassembly of the Pouch Type preserver.

23-18. INSPECTION.

23-19. All life preservers shall be subjected to Preflight, Special and Calendar/Phase Inspections.

23-20. The Preflight Inspection shall be performed on life preservers prior to each flight by the aircrewmember to whom the life preserver is assigned. The Preflight Inspection shall be performed on life preservers installed in aircraft prior to each flight by assigned aircrewmembers.

23-21. The Special Inspection shall be performed on all aircraft installed life preservers at intervals not to exceed 30 days. The inspection shall be performed at the organizational level of maintenance by personnel assigned to the Aviator's Equipment Branch.

23-22. Upon completion of the inspection, make necessary entries on appropriate form in accordance with OPNAVINST 4790.2 Series. The 30-Day Special Inspection may be recorded on a separate history card from the history card recording Calendar/Phase Inspections, functional checks, and modifications.

23-23. The Calendar/Phase Inspection shall be performed on all life preservers prior to placing in service. The Inspection cycle thereafter shall be as follows: personal issue life preservers shall be inspected once every 90 days. Aircraft-installed life preserver inspection shall coincide with the inspection cycle of the aircraft in which installed. See applicable Planned Maintenance System (PMS) publications for specific intervals. In no case shall the interval exceed 231 days. Unless operational requirements demand otherwise, the life preserver Calendar/Phase Inspection shall be performed by the intermediate level of maintenance or above. The functional test shall be performed prior to placing in service, every fourth inspection cycle thereafter, and whenever an inflation assembly is replaced. The leakage test shall be performed during every inspection cycle. If inspection indicates damage, complete appropriate forms in accordance with OPNAVINST 4790.2 Series and forward entire assembly to supply. Refer to paragraph 23-50 for determination of repairability.

23-24. QUALITY ASSURANCE. Properly detailed procedures present a logical sequence for the inspection process. The more critical procedures are underlined to designate steps which require a Quality Assurance inspection to assure performance of specific requirements. After the underlined step is performed by the Aircrew Survival Equipmentman, the procedure shall be verified before the next step is performed. This verification shall be performed by a Collateral Duty Inspector or Quality Assurance Representative (CDI, CDQAR, or QAR). Work Center supervisors are primarily responsible for quality assurance within their centers. OPNAVINST 4790.2 permits supervisors to nominate their more experienced personnel to serve as quality assurance inspectors. Nominated personnel shall be screened and examined by the Quality Assurance Officer prior to their designation as Quality Assurance Inspectors or Quality Assurance Representatives by the Commanding Officer. Under no circumstances shall an Aircrew Survival Equipmentman perform his own quality assurance inspection.

23-25. PREFLIGHT/SPECIAL INSPECTION. To perform a Preflight/Special Inspection, proceed as follows:

WARNING

Ensure that the inflation pull toggle is readily accessible. The pull toggle shall extend from the protective cover flap.

CAUTION

Do not open any sealed or safety-wired/safety tied portions of preserver for Preflight/Special Inspection.

1. Inspect exposed metal parts for corrosion and damage.

2. Inspect inflation assembly for presence of safety wire and CO_2 cylinders.

3. Inspect seams and harness for wear, snags, tears and abrasions.

4. Inspect for presence, security of attachment and, if applicable, operation of survival items.

5. If any discrepancy is noted, the preserver shall be removed from service and repaired in accordance with procedures in this chapter.

23-26. ACCEPTANCE/CALENDAR/PHASE INSPECTION. The Acceptance/Calendar/Phase Inspection consists of the following tasks:

1. Inflation Knob Inspection

2. Bladder/Pouch Inspection

3. Functional Test (every fourth inspection cycle)

4. Visual Inspection

5. Life Preserver Configuration

6. General Inspection

7. Markings Inspection

8. Survival Items Inspection

9. Inflation Assembly Inspection

10. Inflation Lanyard Inspection

11. Leakage Test

12. Records Updating

23-27. INFLATION KNOB INSPECTION. Inspect inflation knob for the following:

1. Attachment of inflation lanyard to knob.

2. Cuts, tears, deterioration, abrasion, stains, and general cleanliness of lanyard.

3. Presence of safety tie on inflator lever.

23-28. BLADDER/POUCH INSPECTION. To inspect bladder and/or pouches, proceed as follows:

1. Inspect fabric for cuts, tears, deterioration, abrasion, stains, and general cleanliness.

2. Inspect seams for proper adhesion or stitching.

3. Inspect straps and loops for security and wear.

4. Inspect any other parts for wear, damage, and security.

5. All hardware for security of attachment, corrosion, damage, wear and, if applicable, ease of operation.

6. Inspect uni-directional snap fastener assemblies for presence, security of attachment, proper orientation, ease of operation, corrosion, and wear.

NOTE

All uni-directional snap fasteners shall be installed with the dot on the button of the snap fastener socket positioned on the side of the snap fastener to which lift must be applied to disengage the socket from the snap fastener stud.

7. If any discrepancies are found, the pouch shall be repaired or removed from service as deemed appropriate by the inspection activity.

23-29. FUNCTIONAL TEST. To perform a functional test, proceed as follows:

CAUTION

Ensure area surrounding preserver is free of foreign objects.

1. Open storage container and remove preserver. Unfold preserver prior to conducting functional test, and completely lay out flat, over storage container.

2. Actuate inflation assembly.

3. The preserver shall fully inflate to design shape, without evidence of restriction, in less than 30 seconds.

4. If preserver does not properly inflate, determine cause. Ensure stem and valve are clean and free of foreign matter.

5. If correction is made, the preserver shall be functionally tested again.

6. Deflate preserver in accordance with paragraph 23-30 to remove all CO_2.

23-30. DEFLATION. To deflate a life preserver, proceed as follows:

Support Equipment Required

Quantity	Description	Reference Number
1	Pump, Rotary Vacuum (or equivalent)	NIIN 00-052-5015 (90567)
As Required	Hose, 3/8- or 1/2-inch Inside Diameter, Rubber	—

1. Attach one end of rubber hose to vacuum pump.

2. Unlock oral inflation valve, hold in open position, and hold vacuum pump hose against end of oral inflation valve. When compartment is collapsed, release oral inflation valve. Screw lock closed.

23-31. VISUAL INSPECTION. Prior to visually inspecting a life preserver assembly, the life preserver shall be inflated with air to 1.0 psig.

CAUTION

Remove all carbon dioxide cylinders prior to inflating life preserver with air.

NOTE

If suitable air source is not available, water-pumped nitrogen (BB-N-411) may be substituted.

23-32. LIFE PRESERVER CONFIGURATION. The life preserver shall be updated by comparing it to the configuration illustrations and tables contained in this chapter.

23-33. GENERAL INSPECTION. Examine life preservers for the following:

NOTE

Refer to the referenced paragraph number where applicable, at end of inspection for repairs.

1. Preserver for cuts, tears, punctures, deterioration and abrasion. Refer to paragraph 23-50 for repair instructions.

2. Seam for proper adhesion. Refer to paragraph 23-50 for repair instructions.

3. Valve inlet stem for security.

4. Inflator and cylinder for security and corrosion. Refer to paragraph 23-58.

6. Oral inflation valve for cracks, security, ease of operation, and corrosion.

7. Any other parts for wear or other damage.

8. All hardware for security of attachment, corrosion, damage, wear and, if applicable, ease of operation.

9. Preservers for stains, dirt, and general cleanliness. Refer to paragraph 23-42 for cleaning instructions.

10. Cross threading and/or loose manifold nuts.

23-34. MARKINGS INSPECTION. To inspect and restore marking, proceed as follows:

Materials Required

Quantity	Description	Reference Number
As Required	Ink, Marking, Laundry, Black	SPE-92 NIIN 00-161-4229
	-or-	
As Required	Ink, Drawing, Waterproof, Yellow	A-A-59291 NIIN 00-634-6583

1. Compare markings on preserver to those listed in table 23-3.

2. Restore any faded markings.

3. Deleted.

4. Correct any markings which do not agree with the applicable table. Paint out old marking and enter new marking as close to proper position as possible.

23-35. SURVIVAL ITEMS INSPECTION. To inspect survival items, proceed as follows:

1. Inventory all items by checking items against table 23-1. Replace any missing or unsatisfactory item.

NOTE

NAVAIR 13-1-6.5, Rescue and Survival Equipment contains detailed information on the inspection of survival items.

2. Inspect all items for damage, spent contents and expired service life. Replace as necessary.

3. Operate all items which are not intended for one-time use. Replace as necessary.

23-36. INFLATION ASSEMBLY INSPECTION. To inspect life preserver inflation assembly, proceed as follows:

1. Loosen CO_2 cylinder locking screw, if present, and remove CO_2 cylinder from valve assembly.

2. Examine inflation device, actuating lever and lanyard, and for corrosion, stripped threads, and other damage.

3. If required, remove any sharp edges from valve with a fine round file.

4. Operate actuating lever several times to ensure that lever moves freely and that piercing pin moves properly inside valve body. Inspect point of piercing pin for serviceability. If point is flat, rounded, dull, or otherwise worn or damaged, replace inflation assembly.

NOTE

Each time inflation assembly gaskets or inflation assembly is removed and replaced for any reason, a functional test shall be conducted. Refer to paragraph 23-29. Use new gaskets when replacing device.

5. If any discrepancy is noted in device that is not repairable in accordance with paragraph 23-58, remove assembly and install a new inflation device.

6. If CO_2 cylinder locking screws are installed, remove them.

23-37. INFLATION LANYARD INSPECTION. To perform the inflation lanyard inspection, proceed as follows:

1. Ensure that CO_2 cylinders have been removed. Actuate inflation assembly.

2. Examine inflation lanyard for frays, ruptures, thin spots, split casing, and security of knots.

3. Replace unsatisfactory inflation lanyard.

4. Safety-wire inflation assembly in accordance with paragraph 23-46.

Table 23-3. Pouch Type Life Preserver Markings

Marking	Location	Letter Height
DATE OF MANUFACTURE [month and year] CONTRACT OR ORDER NO. [applicable number] SPECIFICATION NO. [applicable number] MANUFACTURERS NAME AND TRADEMARK PROPERTY - U.S. NAVY	Upper portion of marking patch (outside front) and outside surface of pouch flap.	1/4 inch
Notes: 1. Replacement markings shall be stamped or stenciled using waterproof black ink.		

23-38. LEAKAGE TEST. All life preservers shall be subjected to a leakage test each Calendar/Phase Inspection. To perform a leakage test proceed in accordance with paragraph 23-40.

23-39. Test Fixture. A suggested test fixture, consisting of a three-way valve, pressure gage, and adapters for compartments being tested, is shown in Chapter 3. Test fixtures must be fabricated to meet the requirements of the schematic shown in figure 23-3.

23-40. Test Procedure. To test life preservers, proceed as follows:

Support Equipment Required

Quantity	Description	Reference Number
1	Test Fixture (or equivalent)	See Chapter 3

CAUTION

Ensure test area is free of foreign objects.

1. Ensure all carbon dioxide has been removed from any preserver which has been functionally tested.

CAUTION

If 3-way valve is not used, measuring device valve must be closed when air feed valve is open.

Damage may occur to oral inflation valve if air supply pressure entering the life preserver exceeds ten (10) psi during this test.

NOTE

Refer to step 3 for test pressures.

If a suitable air source is not available, water-pumped nitrogen (BB-N-411) may be substituted.

2. Unlock oral inflation valve and insert into rubber hose of test fixture. Rotate valve to air supply position and inflate chamber. Alternately position valve between measuring device, vent and air supply until proper pressure of 2.0 psig is attained.

3. The air supply shall be securely shut off and after a minimum of 15 minutes, the pressure shall be readjusted, if necessary, to the leakage test pressure. Record time.

4. Disconnect air supply and check for leaks. Ensure all valves are closed.

5. Record temperature and barometric pressure.

6. After a minimum of 4 hours after completing step 3, record test pressure of chamber. Test pressure shall not decrease to less than 1.6 psig for a life preserver chamber, from a maximum test pressure of 2.0 psig.

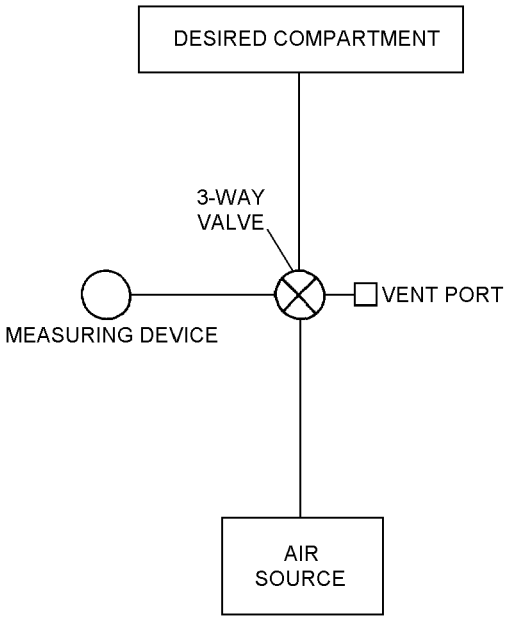

10230003

Figure 23-3. Test Fixture Schematic

7. Record temperature and barometric pressure and correct test pressure for any changes in temperature and barometric pressure. Refer to tables 23-4 and 23-5.

EXAMPLE

UNCORRECTED TEST READING 1.70 PSI

	TEMP.	BARO.
START	75° F	29.90 IN. Hg
END	70° F	29.70 IN. Hg
DIFFERENCE	- 5° F	-0.20
CORRECTION	+0.155	-0.098

TEMP. CORRECTION	+ 0.155
+ BARO. CORRECTION	- 0.098
CORRECTION	+ 0.057

UNCORRECTED READING	1.700 PSI
+ CORRECTION	+ 0.057
CORRECTED READING	1.757 PSI

W0040007

Step 7 - Para 23-40

Table 23-4. Temperature Conversion Chart

Temperature Difference (°F)	Correction (psi)
1	0.031
2	0.062
3	0.093
4	0.124
5	0.155
6	0.186
7	0.217
8	0.248
9	0.279
10	0.310
Rise in temperature: subtract from gage reading. Fall in temperature: add to gage reading.	

8. If pressure of chamber is below 1.6 psig inflate to leakage test pressure and coat with a soap solution to locate leaks. Mark leak areas. Rinse preserver with fresh water, air dry and repair in accordance with paragraph 23-53.

9. Deflate preserver in accordance with paragraph 23-30.

10. Ensure that inflation valve lever is cocked. Install CO_2 cylinder in accordance with paragraph 23-45.

23-41. RECORDS UPDATING. Make necessary entries on appropriate form in accordance with OPNAVINST 4790.2 Series.

23-42. CLEANING AND SERVICING.

23-43. Cleaning and servicing consist of cleaning the life preserver, bladder and/or pouch, installation of the inflation valve protective cover, CO_2 cylinder, and when required, safety wiring of the inflation valve actuating lever.

23-44. CLEANING OF LIFE PRESERVER BLADDER. To clean life preservers, machine washing is preferred on pouches. Alternate method is by hand. Remove any survival items and other detachable items and proceed as follows:

Materials Required

Quantity	Description	Reference Number
As Required	Detergent, General Purpose	MIL-D-16791 NIIN 00-282-9699
As Required	Cloth, Lint-Free, Type II	MIL-C-85043 NIIN 00-044-9281
As Required	Talc, Technical	MIL-T-50036A NIIN 01-080-9589

CAUTION

Solvents are not to be used in cleaning life preservers.

1. Prepare solution of detergent (MIL-D-16791) consisting of 1/4 to 1/2 ounce of detergent per gallon of water.

2. Apply cleaning solution to soiled area with a spray or sponge.

3. Allow solution to remain on surface for several minutes, then agitate with a soft brush or rag.

4. Rinse surface thoroughly with water; wipe with a cloth or sponge. Repeat this application until surface is free from all solution.

Table 23-5. Barometric Pressure Conversion Chart

Press. Diff. (inHG)	Corr. (psi)	Press. Diff. (inHG)	Corr. (psi)	Press. Diff. (inHG)	Corr. (psi)	Press. Diff. (inHG)	Corr. (psi)	Press. Diff. (inHG)	Corr. (psi)
0.01	0.005	0.16	0.078	0.31	0.152	0.46	0.225	0.61	0.299
0.02	0.010	0.17	0.083	0.32	0.157	0.47	0.230	0.62	0.304
0.03	0.015	0.18	0.088	0.33	0.162	0.48	0.235	0.63	0.309
0.04	0.020	0.19	0.093	0.34	0.167	0.49	0.240	0.64	0.314
0.05	0.025	0.20	0.098	0.35	0.172	0.50	0.245	0.65	0.319
0.06	0.030	0.21	0.103	0.36	0.176	0.51	0.250	0.66	0.323
0.07	0.035	0.22	0.108	0.37	0.181	0.52	0.254	0.67	0.328
0.08	0.040	0.23	0.113	0.38	0.186	0.53	0.260	0.68	0.333
0.09	0.045	0.24	0.118	0.39	0.191	0.54	0.265	0.69	0.338
0.10	0.049	0.25	0.123	0.40	0.196	0.55	0.270	0.70	0.343
0.11	0.054	0.26	0.127	0.41	0.201	0.56	0.275	0.71	0.348
0.12	0.060	0.27	0.132	0.42	0.206	0.57	0.279	0.72	0.353
0.13	0.064	0.28	0.137	0.43	0.211	0.58	0.284	0.73	0.358
0.14	0.069	0.29	0.142	0.44	0.216	0.59	0.289	0.74	0.363
0.15	0.073	0.30	0.147	0.45	0.221	0.60	0.294	0.75	0.368

Rise in pressure: add to gage reading.
Fall in pressure: subtract from gage reading.

5. Dry bladder with a lint-free cloth (MIL-C-85043). Apply a light coating of talc (MIL-T-50036A).

23-45. INSTALLATION OF CO_2 CYLINDERS. To install CO_2 cylinders, proceed as follows:

Support Equipment Required

Quantity	Description	Reference Number
1	Scale (Gram)	A-A-52021-1 NIIN 00-514-4117 or equivalent
1	Die, Cylinder Thread Chaser	1842-008-01 (CAGE 03688) NIIN 00-069-4040

Materials Required

Quantity	Description	Reference Number
1	Valve Stem and Seat Seal Kit (Note 1)	105AS100-5 (CAGE 30003) NIIN 00-498-6964

Materials Required (Cont)

Notes: 1. Seat Seal is obtained from Valve Stem and Seat Seal Kit, P/N 105AS100-5, NIIN 00-498-6964, which contains two top, two bottom, and two seat seal gaskets.

NOTE

Weight of charged cylinder will vary according to manufacturer.

1. Weigh a charged cylinder and compare the minimum stamped weight with the scale weight. Discard and replace cylinder if scale weight is 2 grams less than minimum stamped weight.

2. The proper configuration of the inflation assembly is an inflation valve (S9300-1411524) using a 25 to 28 gram CO_2 cylinder (MIL-C-25369, Type I, NIIN 00-372-0585), or an inflation valve, Type II (NIIN 00-561-0094) using a 28 to 31 gram CO_2 cylinder (MIL-C-225369, Type II, NIIN 00-543-6693).

3. Loosen inflator setscrew(s) if installed. Ensure that inflator lever is in a closed position.

CAUTION

Steel threads on CO_2 cylinder can cause damage to aluminum threads on inflator if cylinder is not carefully threaded. If binding occurs during installation of cylinder, use thread chaser die on cylinder thread to cut free excessive plating. Reinstall cylinder. If binding still occurs, replace cylinder.

4. To assure a firm cylinder seat, conduct a cylinder thread count. Threaded portion of cylinder neck shall contain a minimum of seven full threads to assure a firm cylinder seat within valve body. Any cylinder found with less than seven full threads shall be discarded. See figure 23-4.

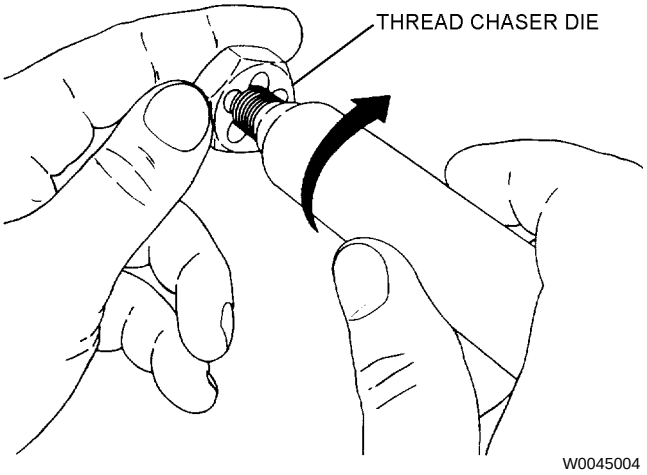

Step 4 - Para 23-45

5. After performing functional test, insert a new seat seal gasket. At intermediate inspection intervals, inspect condition of gasket and replace if necessary.

6. Install CO_2 cylinder into inflator body as far as hand twisting will permit. Tighten setscrews, if installed.

NOTE

When replacing CO_2 cylinder to inflator, ensure that CO_2 cylinder passes through the holding patch loop.

7. Safety-wire inflator as required in accordance with paragraph 23-46.

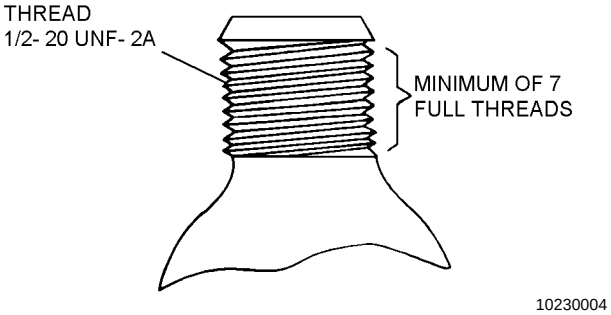

Figure 23-4. Cylinder Thread Count

23-46. SAFETY-WIRING. To safety-wire the inflation assembly, proceed as follows:

Materials Required

Quantity	Description	Reference Number
As Required	Copper Wire, Uncoated, Type S, 0.0159-inch Diameter	QQ-W-343 NIIN 00-236-9501

1. Pass a single strand of uncoated 0.0159-inch Type S copper wire through hole in inflation assembly body and through hole in actuation lever.

2. Twist the wire a minimum of four times and trim the excess.

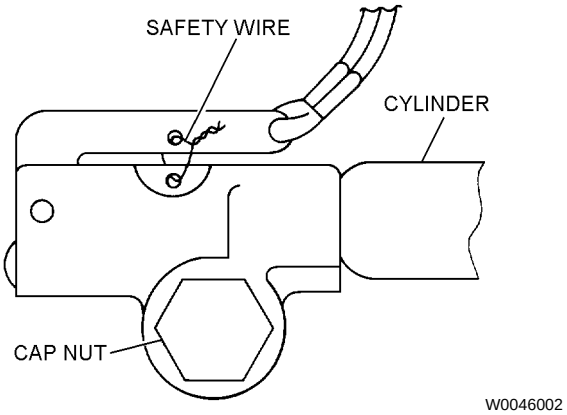

Step 2 - Para 23-46

23-47. REPAIR/REPLACEMENT.

23-48. These instructions for the repair or fabrication of various components or subassemblies of life preservers are to ensure that appropriate items of equipment remain in Ready For Issue (RFI) status. Reference numbers for parts which are defective, corroded or worn and require replacement are included in the applicable paragraph. Other replacement parts, such as carrying cases and personal survival equipment, are listed in the applicable table.

23-49. Replacement of easily removed assembly components such as CO_2 inflation valves and survival items are authorized in addition to repair and replacement procedures documented in this section. The life preserver shall be subjected to a functional and leakage test each time CO_2 inflation valves are removed and replaced for any reason, and each time inflation valve gaskets are replaced.

23-50. DETERMINATION OF REPAIRABILITY. Patching of holes, cuts, tears or punctures 1-inch square or less are the only repairs authorized in a life preserver bladder.

23-51. Life preserver shall be considered beyond repair for any of the following reasons:

1. Porous fabric areas on flotation bladder.

2. Split or open bladder seams.

3. Leakage test failure resulting from other than repairable cut, tear or puncture.

4. Holes, cuts, tears or punctures within 1 inch of flotation bladder seams.

5. Deterioration of the rubberized fabric caused by oil, grease, or any other foreign substance.

6. Deterioration of the rubberized fabric caused by a heavily mildewed condition.

23-52. CEMENTING LIFE PRESERVERS. All cementing of life preservers shall be performed as follows:

NOTE

Toluene shall be the primary solvent used in the fabrication or repair of this assembly. MEK may be used if toluene is not available. Always use solvents sparingly and wipe up excess solvents; do not allow to dry by evaporation.

Support Equipment Required

Quantity	Description	Reference Number
1	Roller, Wooden	GGG-R-00620 NIIN 00-243-9401

Materials Required

Quantity	Description	Reference Number
1	Brush, Disposable	NIIN 00-514-2417
As Required	Toluene	TT-T-548 NIIN 00-281-2002
	-or-	
As Required	Methyl Ethyl Ketone (MEK)	TT-M-261 NIIN 00-281-2762
As Required	Cement, Class 3 Polychloroprene	MIL-A-5540 NIIN 00-142-9913
As Required	Talc, Technical	MIL-T-50036A NIIN 01-089-9589

WARNING

Do not use toluene or MEK near open flame, heat or electrical sparks. Avoid prolonged contact with skin or breathing of fumes. Use only in a well ventilated area.

CAUTION

Use only polychloroprene adhesives and polychloroprene-coated cloth and patches on polychloroprene-coated pouch type life preserver assemblies.

NOTE

Toluene or MEK must be applied vigorously to life preserver material over three years old in order to reactivate the material prior to cementing. Pigment from the material coloring staining a cloth rubbed over the treated surface will indicate the material has been reactivated. Cement shall be applied immediately after the surface has dried.

1. Clean both surfaces to be cemented with four applications of toluene or MEK. Apply toluene or MEK with a cloth using back-and-forth strokes on the first and third applications, and one-way strokes on the second and fourth applications. Allow area to dry between applications.

CAUTION

The effective active period of adhesive mixtures composed of polychloroprene and an accelerator is eight (8) hours. Do not use mixture if older than eight hours.

2. Prepare only enough mixture for 8 hours. Dispose of any remaining mixture.

3. Using a disposable brush, apply cement to completely cover surfaces to be cemented. Use long, one direction strokes and complete each surface before cement becomes tacky as the brush may pull tacky cement from the surface. Allow to dry for 10 minutes.

4. Apply a second coat of cement as in step 3. Use brush strokes perpendicular to the original direction.

5. When second coat of cement has become tacky, place pieces together. If cemented area has a cut or tear, butt edges of damage before applying patch. Roll out bubbles with a wooden roller.

6. Allow cement to cure a minimum of 48 hours.

7. Dust area with talc (MIL-T-50036A).

23-53. PATCHING LIFE PRESERVERS. Patching of life preservers must be performed as follows:

NOTE

Life preserver is not repairable if it has holes, cuts, tears, or punctures over one-inch square.

Materials Required

Quantity	Description	Reference Number
As Required	Cloth, Nylon, Polychloroprene-coated, Type I, Orange	MIL-C-19002 NIIN 00-060-9136

NOTE

Select patch color as near as possible to color of life preserver being repaired.

1. Cut a rounded patch 1 inch larger than damage on all sides.

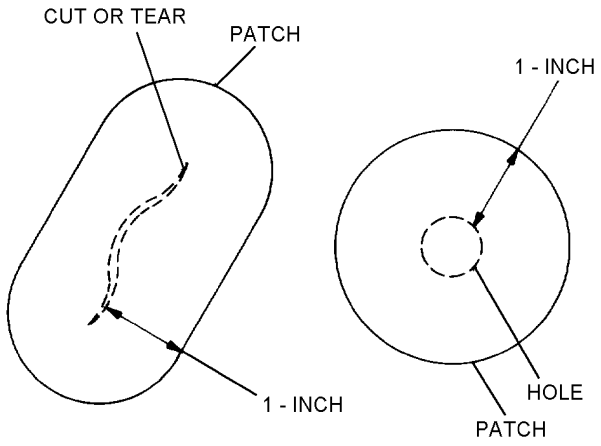

W0053001

Step 1 - Para 23-53

2. Center patch over damage and trace an outline of patch on fabric.

3. Cement patch to damaged area in accordance with paragraph 23-52.

4. Dust area with talc (MIL-T-50036A).

5. Perform a leakage test.

23-54. INSPECTION RECORD PATCH.

NOTE

The 28th In-Service Management Panel meeting for Aviation Life Support Systems rescinded the requirement for the packer to sign the Inspection Record Patch on life preservers. The requirement for all other documentation remains unchanged. The reason for this change is that most history patches are unreadable and the packer's and inspector's names are documented in Aviation Crew Systems Records.

Figure 23-5 Deleted.

23-55. REPLACEMENT OF ORAL INFLATION VALVE. To replace the oral inflation valve, proceed as follows:

NOTE

Replacement of oral inflation valves can only be obtained through salvage of BCM'ed or surveyed inflatable survival equipment.

Materials Required

Quantity	Description	Reference Number
1	Valve, Oral Inflation	—
As Required	Cement, Polychloroprene	MIL-A-5540 NIIN 00-142-9913

Materials Required (Cont)

Quantity	Description	Reference Number
As Required	Brush, Disposable	NIIN 00-514-2417
As Required	Toluene	TT-T-548 NIIN 00-281-2002
	-or-	
As Required	Methyl Ethyl Ketone (MEK)	TT-M-261 NIIN 00-281-2762

CAUTION

Only toluene or MEK shall be used to clean oral inflation valve and tube. Only Polychloroprene cement (MIL-A-5540, NIIN 00-142-9913) shall be used to cement oral inflation valve into oral inflation tube.

1. Carefully cut through metal clamp securing oral inflation valve to oral inflation tube, and remove the metal band and oral inflation valve.

2. If the tip of the oral inflation tube was damaged during removal of valve, trim off damaged section.

3. Clean both surfaces to be cemented with toluene or MEK. Allow areas to dry.

4. Using a small brush, carefully apply a small amount of Polychloroprene cement to the surfaces of the tube and the valve which are to cemented together.

5. Immediately place oral inflation valve into oral inflation tube. Oral inflation valve should be inserted up to valve shoulder. Inspect for proper application/cement.

6. Tightly wrap the cemented portion of the oral inflation tube with cord or wire and allow to cure for 48 hours before removing wrap.

7. Perform leakage test in accordance with paragraph 23-38.

23-56. REPLACEMENT OF LANYARD CORD. To replace lanyard cord, proceed as follows:

Materials Required

Quantity	Description	Reference Number
15 inches	Cord, Nylon, Type I (color optional)	MIL-C-5040 NIIN 00-240-2154

1. Carefully remove carbon dioxide cylinder from the inflator assembly.

2. If desired, remove nut and rubber gasket retaining the inflator and remove inflator and lanyard assembly.

3. Cut lanyard to be replaced and discard along with the two brass clips.

4. Fold the 15-inch length of cord in half, pass folded end through hole in end of inflator lever and tie the cord strands with a lark's head knot, followed by binder knot.

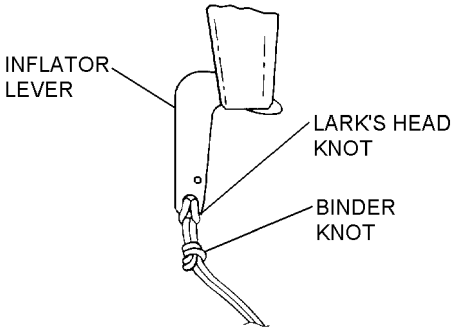

W0056004

Step 4 - Para 23-56

5. Thread the cord strands through the top of the knob (one strand through each hole) and tie a binder knot three inches from the lever end.

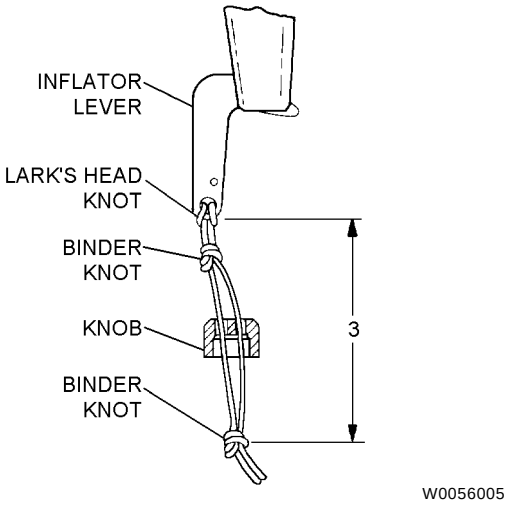

Step 5 - Para 23-56

6. Slide knob down to bottom knot and tie a binder knot on the top of the knot to secure it in position.

NOTE

Ensure 2-inch length of lanyard exits from the end of the lever to the top of the knob.

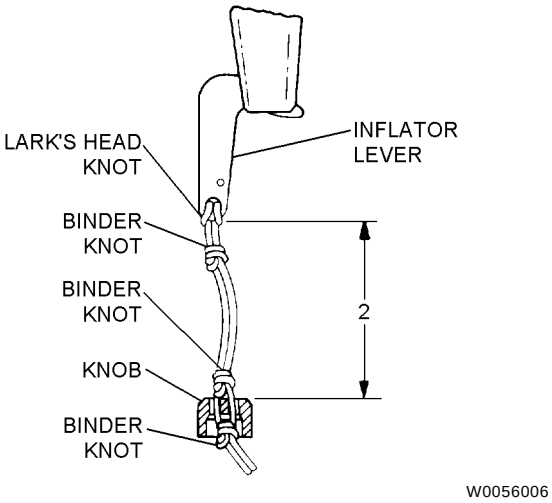

Step 6 - Para 23-56

7. Trim excess cord and sear ends.

8. If inflator was removed, reinstall in accordance with paragraph 23-59.

9. Reinstall CO_2 cylinder in accordance with paragraph 23-45.

10. Safety wire in accordance with paragraph 23-46.

23-57. REPLACEMENT OF DEFECTIVE PLASTIC SNAP FASTENERS WITH METAL SNAP FASTENERS. To replace defective plastic snap fasteners, proceed as follows:

Materials Required

Quantity	Description	Reference Number
1	Cap, Snap Fastener	MS27981-1B NIIN 00-276-4954
1	Socket, Snap Fastener	MS27981-3B NIIN 00-276-4966
1	Stud, Snap Fastener	MS27981-4B NIIN 00-901-9660
2	Post, Snap Fastener	MS27981-5B NIIN 00-250-6858

NOTE

When replacing a defective snap fastener, the mating snap fastener must also be replaced.

1. Using end cutters, remove damaged plastic snap fastener stud and mating socket from eyelets and buttons

2. Install new metal snap fasteners as necessary.

23-58. REPAIR OF CORRODED CO_2 INFLATION VALVE S9300-1411524 (CAGE 62465) OR SAF-T-PAK. To repair CO_2 inflation valve, proceed as follows:

Materials Required

Quantity	Description	Reference Number
As Required	Lubricant, Silicone	DC7 (CAGE 71984) NIIN 00-975-0712

Materials Required (Cont)

Quantity	Description	Reference Number
1	Valve Stem and Seat Seal Kit (Note 1)	105AS100-5 (CAGE 30003) NIIN 00-498-6964
As Required	Cloth, Emery No. 240	—
1	Valve, Inflation	S9300-1411524 (CAGE 62465) -or- SAF-T-PAK
As Required	Abrasive Mat	MIL-A-9962 NIIN 00-967-5093
As Required	Corrosion Preventive Compound (Amiguard) Type I	MIL-C-85054 NIIN 01-041-1596

Notes: 1. Valve Stem and Seat Seal Kit, P/N 105AS100-5, NIIN 00-498-6964, contains two top, two bottom, and two seat seal gaskets.

1. Remove CO_2 cylinder from valve and retain.

2. Remove inflation valve from preserver. Discard two gaskets on valve stem.

3. Remove grooved taper pin (retaining lever) from inflation valve, using awl and mallet. See figure 23-6.

4. Remove lever, spring, and piercing pin. If spring is broken or corroded, replace entire valve.

5. If piercing pin or actuating lever is corroded, remove corrosion with abrasive mat. If abrasive mat is ineffective, use 240 grit emery cloth. Do not damage O-ring on piercing pin. Wipe off any dirt or moisture from actuating lever and apply a thin coat of MIL-C-85054 and allow to dry.

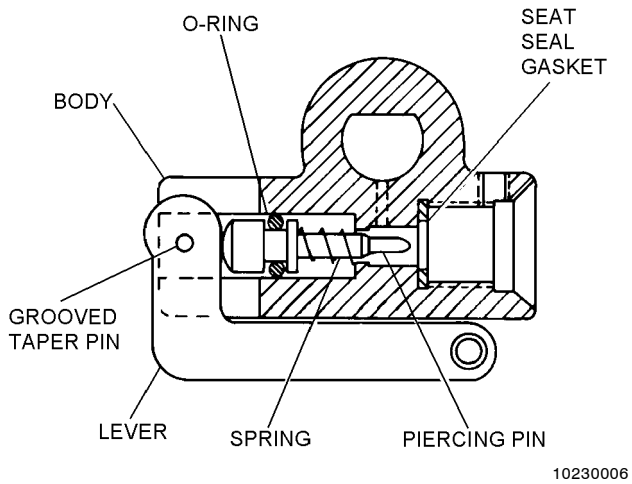

Figure 23-6. CO_2 Inflation Assembly

6. Clean residue from actuating lever on piercing pin. Lightly coat base of piercing pin with silicone lubricant.

7. Reassemble inflation valve and operate actuating lever three or four times. Ensure that lever and piercing pin move freely.

8. If piercing pin and lever do not move freely, obtain replacement valve.

9. Reinstall inflation valve on life preserver using new gaskets.

10. Install cap nut onto valve stem and torque to a value of 8 ±1 in-lb.

11. Reinstall CO_2 cylinder using new seat seal gaskets.

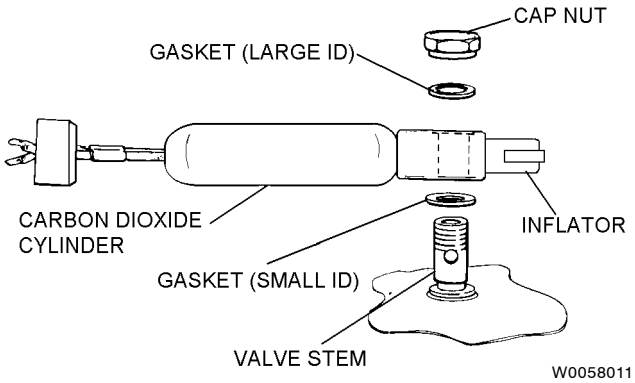

Step 11 - Para 23-58

23-59. REPLACEMENT OF TOP AND BOTTOM GASKETS. To replace the top and bottom gaskets on the inflator, proceed as follows:

Support Equipment Required

Quantity	Description	Reference Number
1	Wrench, 9/16-inch	—

Materials Required

Quantity	Description	Reference Number
1	Valve Stem and Seat Seal Kit (Note 1)	105AS100-5 (CAGE 30003) NIIN 00-498-6964

Notes: 1. Seat Seal is obtained from Valve Stem and Seat Seal Kit, P/N 105AS100-5, NIIN 00-498-6964, which contains two top, two bottom, and two seat seal gaskets.

1. Remove cap nut and top gasket from inflator.

WARNING

Ensure that gaskets are properly positioned. The top gasket has a larger internal diameter than the bottom gasket.

2. Remove inflator and replace bottom gasket.
3. Carefully place inflator onto valve stem.
4. Install top gasket onto valve stem.
5. Tighten cap nut onto valve stem and torque to a value of 8 ±1 in-lb.
6. Perform functional and leakage tests on life preserver cell that was repaired. Refer to paragraphs 23-29 and 23-38.

23-60. REPLACEMENT OF CHECK VALVE ASSEMBLY. To replace a defective check valve assembly, proceed as follows:

Support Equipment Required

Quantity	Description	Reference Number
1	Tool, Valve Core	8769A or equivalent (CAGE 27783) NIIN 01-354-5423
1	Wrench, Torque	—

Materials Required

Quantity	Description	Reference Number
1	Valve, Pneumatic Inflator (Check Valve Assembly) (Note 1)	Schrader-Bridgeport P/N 8457500047

Notes: 1. Schrader-Bridgeport P/N 8457500047 must be open purchased from:
Schrader-Bridgeport Intl
205 Frazier Rd
P.O. Box 668
Altivista, VA 24517
Phone (804) 369-8875

1. If not available, fabricate a valve core tool as shown in Chapter 3.

2. Remove inflator cap nut.

3. Insert valve core tool and unscrew check valve from valve stem.

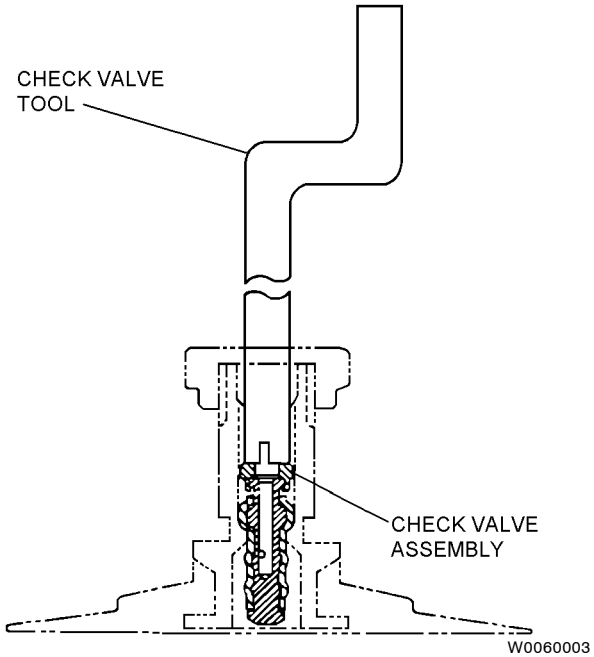

Step 3 - Para 23-60

4. Insert new check valve in valve stem and tighten with valve core tool hand tight.

5. Replace cap nut and torque to a value of 8 ±1 in-lb.

6. Perform a functional and leakage test on life preserver cell that was repaired. Refer to paragraphs 23-29 and 23-38.

23-61. FABRICATION OF HOISTING STRAP (POUCH TYPE). To fabricate a hoisting strap, see figure 23-7 and proceed as follows:

Materials Required

Quantity	Description	Reference Number
3	Cap, Snap Fastener	MS27983-6
3	Socket, Snap Fastener	MS27983-7
1	Tip, Ball Type, Brass, 1-inch Tip	MIL-B-895
1	Adjuster, Slide, 1-inch Adjuster	MIL-G-383
As Required	Webbing, Nylon, 1-inch	MIL-W-17337
As Required	Thread, Nylon, Type II, Size E	V-T-295 NIIN 00-204-3884

NOTE

Unless otherwise specified, all machine stitching shall be in accordance with ASTM-D-6193, type 301 lockstitch, 8 to 10 stitches per inch.

1. Cut a 75 5/8-inch length of webbing and sear ends.

2. Position a 12 1/2-inch loop on the webbing, maintaining 60° of arc; stitch the webbing back onto itself.

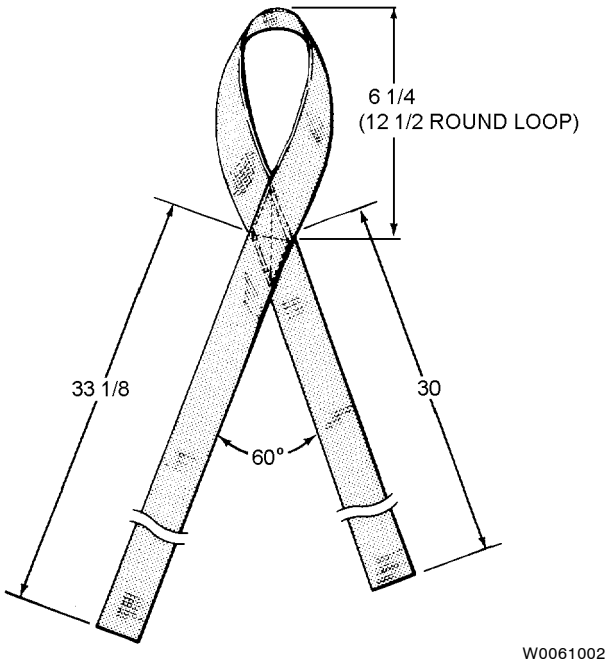

Step 2 - Para 23-61

3. Install three button and socket assemblies onto webbing, socket side up.

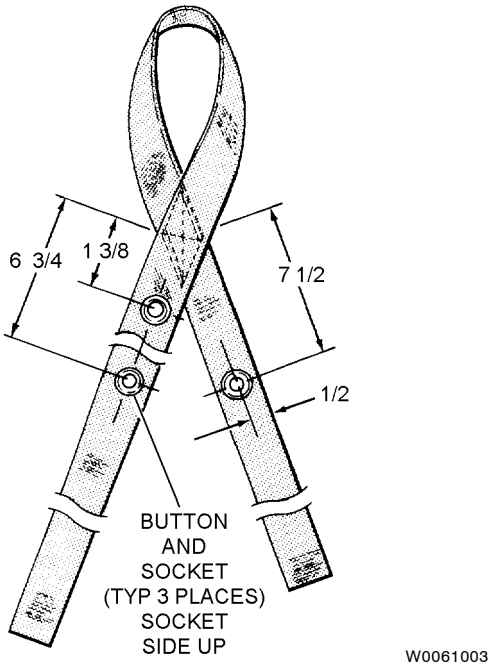

Step 3 - Para 23-61

4. Crimp brass ball type tip 1/2 inch onto webbing.

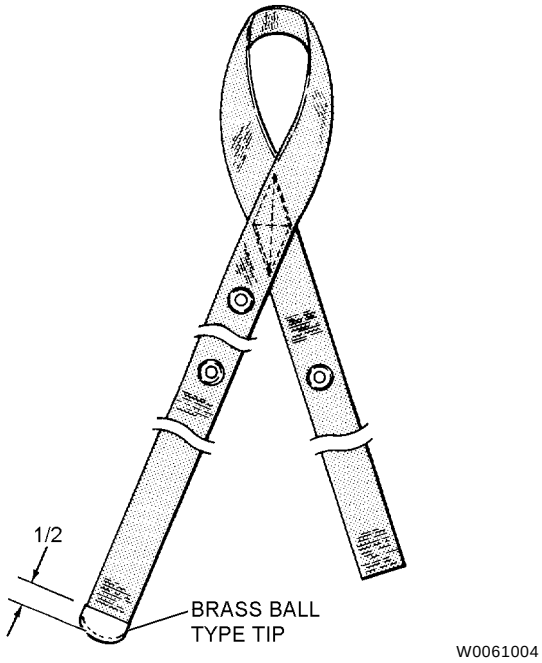

Step 4 - Para 23-61

5. Cut a 6-inch length of webbing and sear ends.

6. Reeve webbing through adjuster; fold and stitch.

7. Insert webbing through slot opening in male portion of buckle assembly; fold and stitch. See figure 23-7, detail A.

8. Insert webbing through slot opening in female portion of buckle assembly, and reeve through slide adjuster. See figure 23-7, detail B.

23-62. REPAIR/FABRICATION OF LIFELINE AND TOGGLE ASSEMBLY. To repair or fabricate life line and toggle assembly, proceed as follows:

Materials Required

Quantity	Description	Reference Number
36-inch length	Cord, Nylon, Type III	MIL-C-5040 NIIN 0-240-2154
1	Dowel, hard wood 2 1/2-inch X 5/8-inch diameter	—
1	3/16-inch drill	—
As Required	Thread, Nylon Type II, Size E	V-T-295 NIIN 00-204-3884

1. Drill a 3/16-inch diameter hole in the center of a 2 1/2-inch X 5/8-inch diameter wooden dowel.

2. Pass one end of a 36-inch length of Type III nylon cord (MIL-C-5040) through the 3/16 inch diameter hole in center of wooden dowel. Secure cord with an overhand knot on each side of dowel.

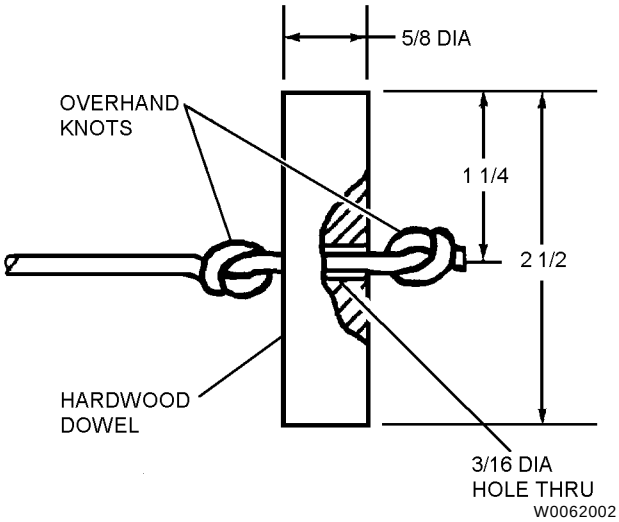

Steps 1 and 2 - Para 23-62

3. Place a 1 1/4-inch diameter bowline loop in nylon cord 8 1/2 inches from center of wooden dowel.

4. Attach free end of Type III nylon cord to belt using bowline knot only.

23-63. PACKING PROCEDURE FOR POUCH TYPE LIFE PRESERVER ASSEMBLY.

23-64. To pack a Pouch Type Life Preserver Assembly, proceed as follows:

1. Ensure that preserver, pouch, belt and hoisting strap have been inspected in accordance with paragraph 23-18.

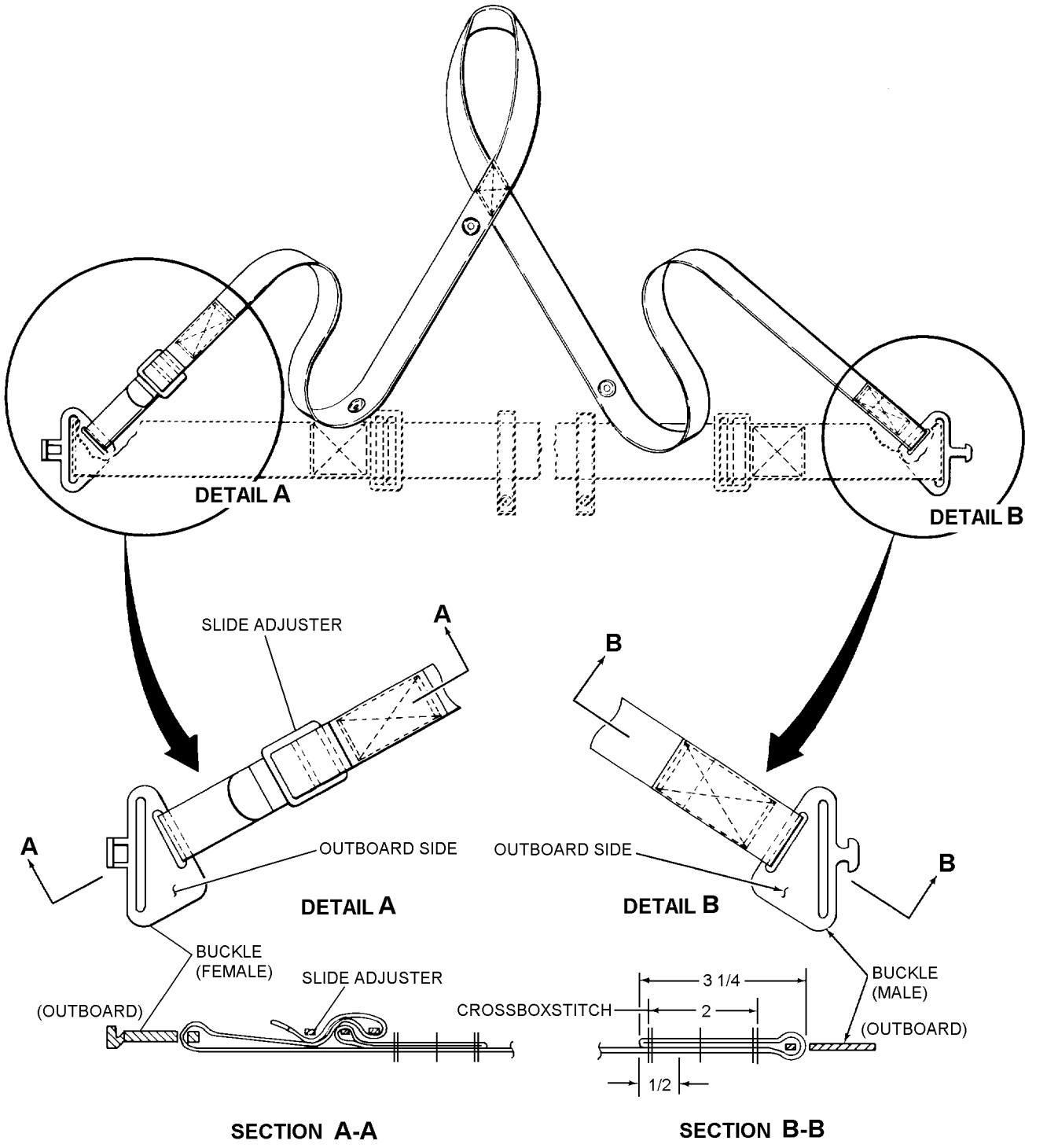

10230007

Figure 23-7. Hoisting Strap, Details

NOTE

NAVAIR 13-1-6.5 Rescue and Survival Equipment contains information on inspection and replacement of survival items.

2. Ensure that survival items have been inspected for expiration and damage. See table 23-1 for items used.

3. Ensure belt is inserted through retaining patch on rear of preserver.

4. Lay preserver on a clean surface with inflation assembly facing up.

5. Insert ends of belt through slots in pouch.

NOTE

The dye marker and whistle are tied to the belt with a 24 ± 2-inch length of Type I nylon cord (MIL-C-5040). Use bowline knots only.

6. Ensure each survival item is properly attached and flotation chamber completely deflated.

7. Position lifeline with toggle, whistle and dye marker in bottom of pouch. Lock oral inflation valve.

8. Fold flotation tube sides over to width of pouch.

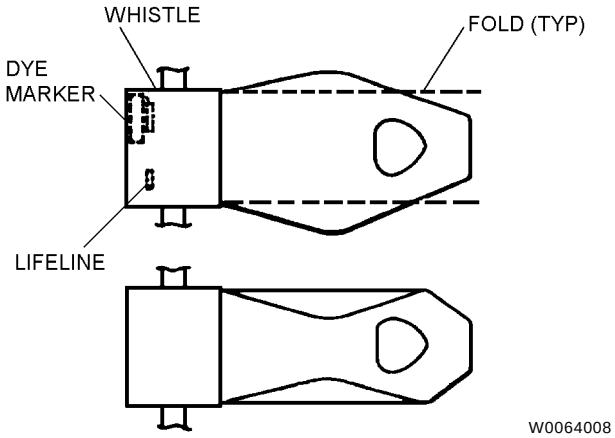

Step 8 - Para 23-64

9. Roll flotation tube into pouch and close pouch.

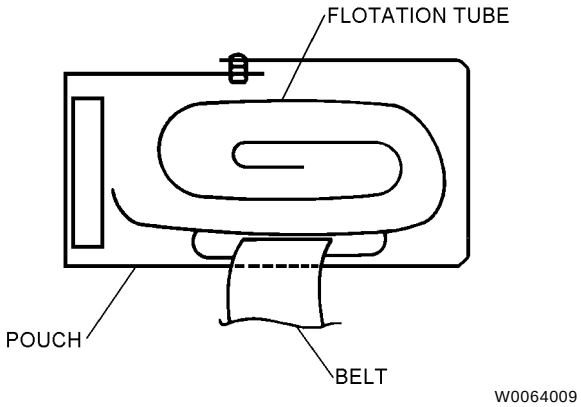

Step 9 - Para 23-64

10. Make necessary entries on appropriate form in accordance with OPNAVINST 4790.2 Series.

Section 23-4. Illustrated Parts Breakdown (IPB)

23-65. GENERAL.

23-66. This section lists and illustrates the assemblies and detail parts of the Pouch Type Life Preserver Assembly.

23-67. The Illustrated Parts Breakdown should be used during maintenance when requisitioning and identifying parts.

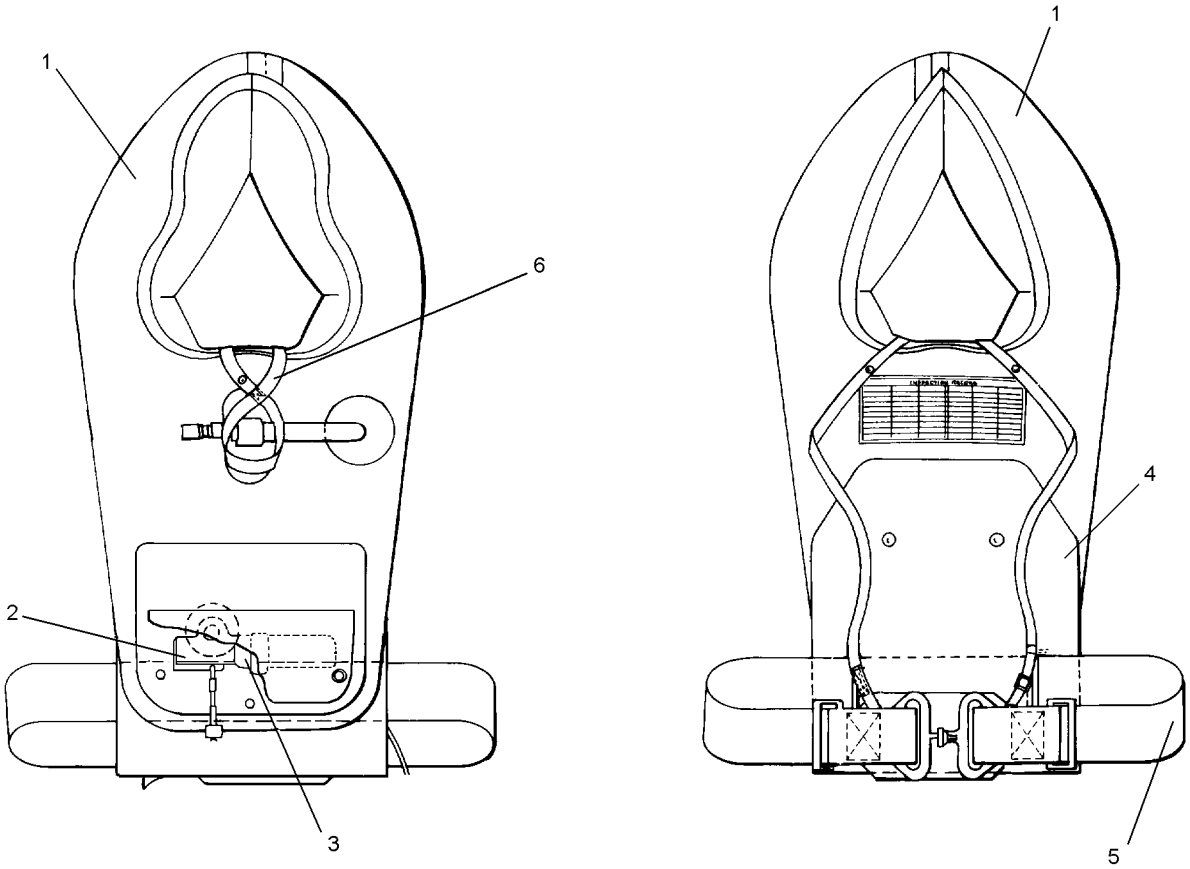

10230008

Figure 23-8. Pouch Type Life Preserver Assembly, Illustrated Parts Breakdown

Figure and Index Number	Part Number	Description 1 2 3 4 5 6 7	Units Per Assembly	Usable On Code
23-8	No Number	POUCH TYPE LIFE PRESERVER	REF	
-1	S3306-1230582 (CAGE 80068)	FLOTATION CELL	1	
-2	S9300-1411524 (CAGE 62465)	. INFLATION VALVE	1	A
	NIIN 00-561-0094	. INFLATION VALVE (Type II)	1	B
-3	NIIN 00-372-0585	. . CO_2 CYLINDER, 25-28 Grams . . . . . (MIL-C-25369, Type I)	1	A
	NIIN 00-543-6693	. . CO_2 CYLINDER, 28-31 Grams . . . . . (MIL-C-25369, Type II)	1	B
-4	—	. POUCH	1	
-5	MIL-W-530	. BELT (Type III)	1	
-6	MIL-W-17337	. HOISTING STRAP	1	
	NOTE: CO_2 Cylinder must be requisitioned separately.			

NUMERICAL INDEX

Part Number	Figure and Index Number	SM&R Code
MIL-W-17337	23-8-6	PA--Z
MIL-W-530	23-8-5	PA--Z
NIIN 00-372-0585	23-8-3	PAOZZ
NIIN 00-543-6693	23-8-3	PAOZZ
NIIN 00-561-0094	23-8-2	PAOGG
S3306-1230582 (CAGE 80068)	23-8-1	PA--Z
S9300-1411524 (CAGE 62465)	23-8-2	PAOZZ

CHAPTER 24

LPU-28/P AND LSC (P/N 482) LIFE PRESERVER ASSEMBLIES

Section 24-1. Description

24-1. GENERAL.

NOTE

The Lifesaving Systems Corporation part number 482 (LSC P/N 482) Life Preserver is a modified LPU-28/P life preserver. Unless otherwise indicated all references to and maintenance requirements of the LPU-28/P apply to the LSC P/N 482 Life Preserver.

24-2. Both assemblies are authorized for use by helicopter rescue aircrewman during search and rescue operations. They are designed to be compatible with helicopter aircrewman helmets. They provide storage and pile tape attachment points for the SDU-5E distress light and AN/PRC-125 radio. Table 24-1 and figure 24-1 apply to the LPU-28/P. Parts for the LSC P/N 482 must be ordered open purchase from LSC until Navy part numbers and NIINs can be established. (See table 24-1, note 2.)

24-3. CONFIGURATION.

24-4. The life preservers weigh a maximum of 2.5 pounds (without accessories) and provide a minimum of 30 pounds of buoyancy. Both assemblies consist of a single compartment flotation assembly, a casing assembly, a waist belt, and a carbon dioxide inflation assembly. The LPU-28/P incorporates a divers mouthpiece type oral inflation valve, and a pressure relief valve. The LSC P/N 482 has a standard oral inflation tube with a knurled ring locking mechanism, and does not incorporate a pressure relief valve. Figure 24-1 applies to the LPU-28/P, however the LSC P/N 482 is similar in appearance.

CAUTION

Only Polyurethane adhesives and Polyurethane film patches shall be used on Polyurethane film LPU-28/P life preserver assemblies.

24-5. The flotation assembly is constructed of heat sealed polyurethane film. It is contained by the cover assembly and attached to the oral inflation assembly, pressure relief valve, and carbon dioxide inflator by threaded access fittings and a valve stem which pass through the cover assembly. The casing assembly has an adjustable waist belt and optional back strap attached.

24-6. The carbon dioxide inflator consists of a carbon dioxide cartridge (28-31 grams, type II) and an inflation valve (3063). The carbon dioxide inflator is mounted on the valve stem, which passes through the casing assembly and seals to the flotation assembly. A check valve is installed in the valve stem to prevent leakage. The cord connecting the actuating knob and carbon dioxide inflator passes through a channel on the casing assembly to provide an all directional pull.

24-7. APPLICATION.

24-8. This assembly is authorized for use by helicopter rescue aircrewmen on all search and rescue operations.

24-9. FUNCTION.

24-10. The life preserver is manually inflated by pulling the actuator knob down. In an emergency situation, the oral inflation valve may be used to top-off an inflated preserver, maintain inflation of a leaky

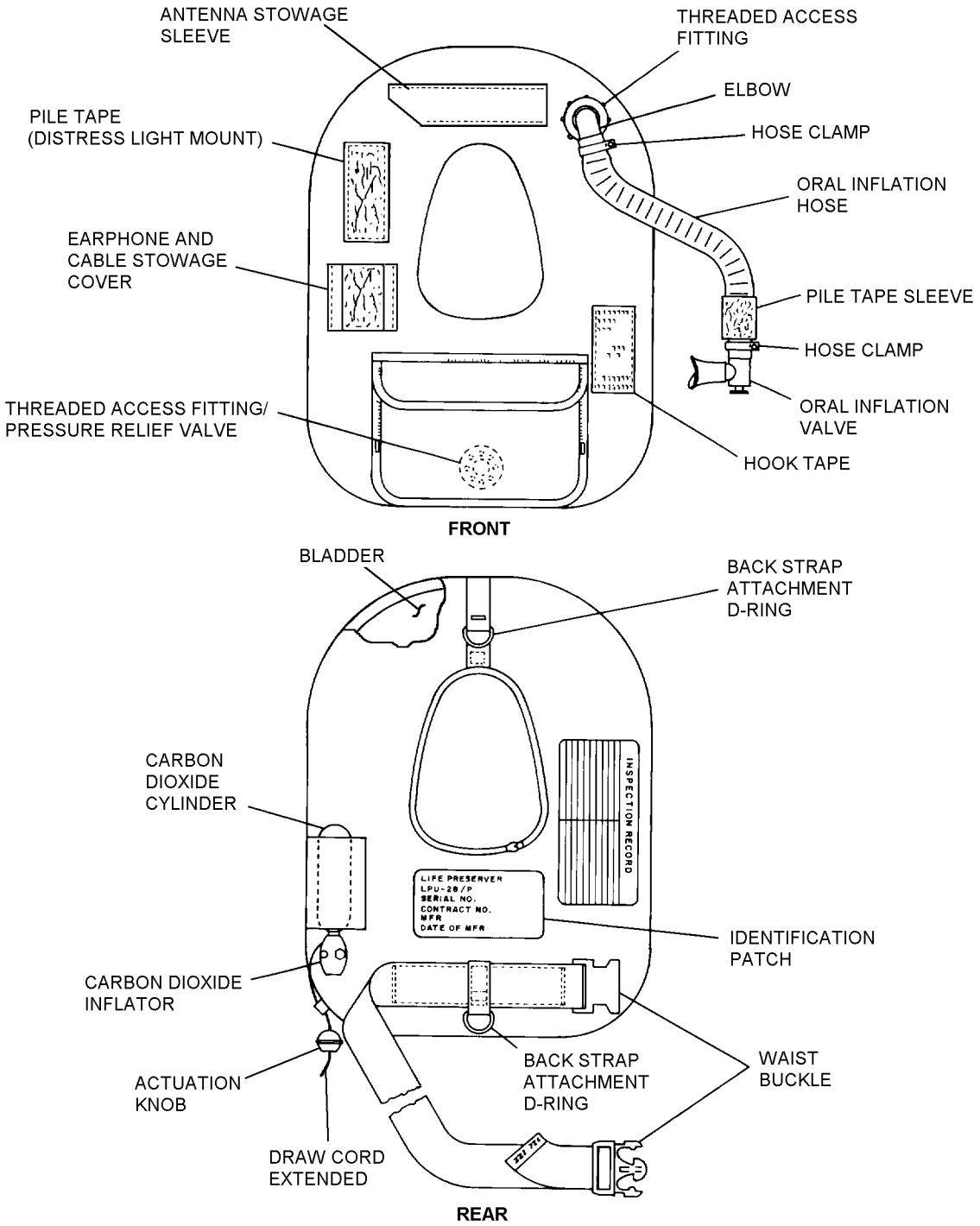

Figure 24-1. LPU-28/P Life Preserver Assembly, Parts Nomenclature

Table 24-1. LPU-28/P Life Preserver Components

Description	Quantity Required	Reference Number	NIIN	SM&R Code
Inflatable Life Preserver (LPU-28/P)	1	1577AS101-1 (CAGE 30003)	01-199-4974	PAOGG
Casing Assembly	1	TBD	TBD	TBD
Flotation Assembly Bladder	1	8581 (CAGE 58293)	01-225-9757	PAOGG
Carbon Dioxide Inflation Assembly	1	3063 (CAGE 58293)	01-218-6737	PAOZZ
Inflator Stem Bottom Gasket (Note 1)	1	105AS100-4 (CAGE 30003)	—	PAOZZ
Inflator Stem Top Gasket (Note 1)	1	105AS100-3 (CAGE 30003)	—	PAOZZ
Inflator Stem Cap Nut	1	3037 (CAGE 58293)	01-218-1055	PAOZZ
Actuation Knob	1	3031 (CAGE 58293)	01-218-1143	PAOZZ
Buckle, Waist Strap	1	1224 (CAGE 58293)	01-097-8651	PAOZZ
Pressure Relief Valve Cap	1	3041 (CAGE 58293)	01-219-2152	PAOZZ
Pressure Relief Valve Spring	1	1213 (CAGE 58293)	01-219-2409	PAOZZ
Pressure Plate	1	3043 (CAGE 58293)	01-097-8416	PAOZZ
Pressure Seal	1	3100 (CAGE 58293)	01-098-7457	PAOZZ
Threaded Access Fitting, External	2	3000 (CAGE 58293)	01-097-8652	PAOZZ
Threaded Access Fitting, Internal	2	3001 (CAGE 58293)	01-145-6713	PAOZZ
Oral Inflation Elbow	1	3022 (CAGE 58293)	01-098-1780	PAOZZ
Elbow Gasket	1	3021 (CAGE 58293)	01-097-9967	PAOZZ
Elbow Ring, Retaining	1	3023 (CAGE 58293)	01-219-2585	PAOZZ
Oral Inflation Hose	1	1202 (CAGE 58293)	—	PAOZZ
Hose Clamp	1	1251 (CAGE 58293)	01-222-7822	PAOZZ
Oral Inflation Hose Sleeve (Pile Tape)	1	1219 (CAGE 58293)	—	PAOGG

Table 24-1. LPU-28/P Life Preserver Components (Cont)

Description	Quantity Required	Reference Number	NIIN	SM&R Code
Oral Inflation Valve	1	3010 (CAGE 58293)	01-244-4270	PAOZZ
Back Strap	1	8582 (CAGE 58293)	—	PAOGG
Carbon Dioxide Cylinder (Type II)	1	MIL-C-25369 (CAGE 81349)	00-543-6693	PAOZZ
Seat Seal	1	849AML	01-291-3593	PAOZZ
Check Valve Assembly	1	67A319D18-1 (CAGE 30003)	01-081-0322	PAOZZ

Notes: 1. Top and bottom gaskets are obtained from Valve Stem Kit, P/N 105AS100-6, NIIN 00-113-8290, which contains one top and one bottom gasket.
2. Until Navy part numbers and NIINs can be established for the LSC P/N 482, all parts must be ordered open purchase from:
Lifesaving Systems Corp.
220 Elsberry Road
Apollo Beach, FL 33572-2289
(813) 645-2748
(CAGE 64249).

preserver, or inflate a preserver when the inflator assembly fails. The oral inflation valve may be used to inflate or deflate the preserver during an inspection test. To operate the oral inflation valve, depress the button to inflate, then release button to keep air from exiting the inflation assembly.

24-11. DONNING PROCEDURE.

24-12. To don the life preserver, proceed as follows:

1. Place unit over head.

2. Snap waist belt buckle and adjust belt by gripping the belt's free end and pulling to a comfortable fit. Do not tighten the waist belt to the extent that it will restrict breathing or movement.

Section 24-2. Modifications

24-13. GENERAL.

24-14. The LPU-28/P Series Life Preserver Assembly shall be upgraded by comparing the configuration of the assembly with modifications listed in table 24-2. Common repairs and fabrication instructions to maintain serviceability are listed in table 24-3.

Table 24-2. LPU-28/P Directives

Description of Modification	Application	Modification Code
Fabrication of AN/PRC-125 Radio Stowage Assembly	All LPU-28/P Life Preservers	626

Notes: 1. There are no current directives for the LSC P/N 482 life preserver.

Table 24-3. LPU-28/P Life Preserver Common Repairs and Fabrications

Description of Repair or Fabrication	Paragraph Number
Determination of Repairability	24-49
Casing Repair Procedures	24-51
Cementing Life Preserver	24-52
Patching Life Preserver	24-53
Recementing of Bladder Fin Seam	24-55
Replacement of Lanyard Cord	24-56
Repair of Corroded CO_2 Inflation Valve	24-57
Replacement of Top and Bottom Gaskets	24-58
Replacement of Check Valve Assembly	24-59
Disassembly of Life Preserver	24-60
Reassembly of Life Preserver	24-61
Replacement of Components for Elbow-Oral Inflating Hose	24-62
Replacement of Pressure Relief Valve	24-63
Fabrication of AN/PRC-125 Radio Stowage Assembly	24-64

Section 24-3. Maintenance

24-15. GENERAL.

24-16. This section contains information on inspection, disassembly, repair/replacement, testing, reassembly, and cleaning of the LPU-28/P Life Preserver.

24-17. INSPECTION.

24-18. All life preservers shall be subjected to Preflight, Special and Calendar/Phase Inspections.

24-19. The Preflight Inspection shall be performed on life preservers prior to each flight by the aircrewmember to whom the life preserver is assigned. The Preflight Inspection shall be performed on life preservers installed in aircraft prior to each flight by assigned aircrewmembers.

24-20. The Special Inspection shall be performed on all aircraft installed life preservers at intervals not to exceed 30 days. The inspection shall be performed at the organizational level of maintenance by personnel assigned to the Aviator's Equipment Branch.

24-21. Upon completion of the inspection, make necessary entries on appropriate form in accordance with OPNAVINST 4790.2 Series. The 30-Day Special Inspection may be recorded on a separate history card from the history card recording Calendar/Phase Inspections, functional checks, and modifications.

24-22. The Calendar/Phase Inspection shall be performed on all life preservers prior to placing in service. The Inspection cycle thereafter shall be as follows: personal issue life preservers shall be inspected once every 90 days. Aircraft-installed life preserver inspection shall coincide with the inspection cycle of the aircraft in which installed. See applicable Planned Maintenance System (PMS) publications for specific intervals. In no case shall the interval exceed 231 days. Un less operational requirements demand otherwise, the life preserver Calendar/Phase Inspection shall be performed by the intermediate level of maintenance or above. The functional test shall be performed prior to placing in service, every fourth inspection cycle thereafter, and whenever an inflation assembly is replaced. The leakage test shall be performed during every inspection cycle. If inspection indicates damage, complete appro-

priate forms in accordance with OPNAVINST 4790.2 Series and forward entire assembly to supply. Refer to paragraph 24-49 for determination of repairability.

24-23. QUALITY ASSURANCE. Properly detailed procedures present a logical sequence for the inspection process. The more critical procedures are underlined to designate steps which require a Quality Assurance inspection to assure performance of specific requirements. After the underlined step is performed by the Aircrew Survival Equipmentman, the procedure shall be verified before the next step is performed. This verification shall be performed by a Collateral Duty Inspector or Quality Assurance Representative (CDI, CDQAR, or QAR). Work Center supervisors are primarily responsible for quality assurance within their centers. OPNAVINST 4790.2 Series permits supervisors to nominate their more experienced personnel to serve as quality assurance inspectors. Nominated personnel shall be screened and examined by the Quality Assurance Officer prior to their designation as Quality Assurance Inspectors or Quality Assurance Representatives by the Commanding Officer. Under no circumstances shall an Aircrew Survival Equipmentman perform his own quality assurance inspection.

24-24. PREFLIGHT/SPECIAL INSPECTION. To perform a Preflight/Special Inspection, proceed as follows:

WARNING

Ensure that inflation actuating knob is readily accessible. The knob shall extend from the protective cover flap.

CAUTION

Do not open any sealed or safety-wired/safety tied portions of preserver for Preflight/Special Inspection.

1. Inspect exposed metal parts for corrosion and damage.

2. Inspect inflation assembly for presence of safety wire and CO_2 cylinder.

3. Inspect seams and harness for wear, snags, tears and abrasions.

4. Inspect for presence of survival items, security of attachment and, if applicable, operation.

5. Inspect casing fabric for cuts, tears, abrasions, security of stitching, and other damage.

6. Check identification and record patches for secure attachment to life preserver fabric.

7. Inspect hook and pile tape for secure attachment.

8. Adjust and don preserver to ensure proper fit.

9. If any discrepancy is noted, the preserver shall be removed from service and repaired in accordance with procedures in this chapter.

24-25. ACCEPTANCE/CALENDAR/PHASE INSPECTION. The Acceptance/Calendar/Phase Inspection consists of the following tasks:

1. Inflation Handle Inspection

2. Casing Inspection

3. Functional Test (every fourth inspection cycle)

4. Visual Inspection

5. Life Preserver Configuration

6. General Inspection

7. Markings Inspection

8. Inflation Assembly Inspection

9. Inflation Lanyard Inspection

10. Leakage Test

11. Records Updating

24-26. INFLATION HANDLE INSPECTION. Inspect inflation actuation handle for the following:

1. Attachment of inflation lanyard to handle.

2. Corrosion on fasteners and ease of operation.

3. Cuts, tears, deterioration, abrasion, stains, and general cleanliness of lanyard.

4. Presence of safety tie on inflation handle.

24-27. CASING INSPECTION. To inspect casing, proceed as follows:

1. Inspect fabric for cuts, tears, deterioration, abrasion, stains, and general cleanliness.

2. Inspect seams for proper stitching.

3. Inspect straps and loops for security and wear.

4. Inspect any other parts for wear, damage, and security.

5. All hardware for security of attachment, corrosion, damage, wear and, if applicable, ease of operation.

6. Inspect fastener assemblies for presence, security of attachment, proper orientation, ease of operation, corrosion, and wear.

7. If any discrepancies are found, the casing shall be repaired or removed from service as deemed appropriate by the inspection activity.

24-28. FUNCTIONAL TEST. To perform a functional test, proceed as follows:

CAUTION

Ensure area surrounding preserver is free of foreign objects.

1. Completely open preserver and unfold prior to conducting functional test.

2. Actuate inflation assembly.

3. The preserver shall fully inflate to design shape, without evidence of restriction, in less than 30 seconds.

4. If preserver does not properly inflate, determine cause. Ensure stem and valve are clean and free of foreign matter.

5. If correction is made, the preserver shall be functionally tested again.

6. Deflate preserver in accordance with paragraph 24-29 to remove all CO_2.

24-29. DEFLATION. To deflate a life preserver, proceed as follows:

Support Equipment Required

Quantity	Description	Reference Number
1	Pump, Rotary Vacuum (or equivalent)	NIIN 00-052-5015 (90567)
As Required	Hose, 3/8- or 1/2-inch Inside Diameter, Rubber	—

1. Attach one end of rubber hose to vacuum pump.

2. Deflate through oral inflation valve. Hold in open position, and hold vacuum pump hose in hand against end of oral inflation valve and press valve button. When compartment is collapsed, release button on oral inflation valve. Screw lock closed.

24-30. VISUAL INSPECTION. Prior to visually inspecting a life preserver assembly, the life preserver shall be inflated with air to 1.0 psig.

CAUTION

Remove carbon dioxide cylinder prior to inflating life preserver with air.

NOTE

If suitable air source is not available, water-pumped nitrogen (FED SPEC BB-N-411) may be substituted.

24-31. LIFE PRESERVER CONFIGURATION. The life preserver shall be updated by comparing it to the illustrations and tables in this chapter. The LSC P/N 482 does not have a pressure relief valve. The oral inflation valve is a standard oral inflation tube with a knurled ring locking mechanism. The inflation assembly toggle has four beads and is secured to the casing with a single snap.

24-32. GENERAL INSPECTION. Examine life preservers for the following:

1. Casing fabric for cuts, tears, punctures, deterioration and abrasion. Refer to paragraph 24-51 for repair instructions.

2. Seams for proper adhesion. Refer to paragraph 24-55 for repair instructions.

3. Valve inlet stems for security.

4. Oral inflation valve for cracks, security, ease of operation, and corrosion.

5. Patches for proper adhesion and wear. Refer to paragraph 24-53 for repair instructions.

6. Any other parts for wear or other damage.

7. All hardware for security of attachment, corrosion, damage, wear and, if applicable, ease of operation.

8. Preservers for stains, dirt, and general cleanliness. Refer to paragraph 24-40 for cleaning instructions.

9. Cross threading and/or loose manifold nuts.

24-33. MARKINGS INSPECTION. To inspect and restore marking, proceed as follows:

Materials Required

Quantity	Description	Reference Number
As Required	Ink, Drawing, Waterproof, Yellow	A-A-59291 NIIN 00-634-6583

1. Compare markings on preserver to those in table 24-4 and figure 24-1.

2. Restore any faded markings.

3. Deleted.

4. Correct any markings which do not agree with the table. Paint out old marking and enter new marking as close to proper position as possible.

24-34. INFLATION ASSEMBLY INSPECTION. To inspect life preserver inflation assemblies, proceed as follows:

1. Remove CO_2 cylinder from valve assembly.

2. Examine inflation device, actuating lever and lanyard for fraying, corrosion, stripped threads, and other damage.

3. Operate actuation lever several times to ensure that lever moves freely and that piercing pin moves properly inside valve body. Inspect point of piercing pin for serviceability. If point is flat, rounded, dull, or otherwise worn or damaged, replace inflation assembly.

NOTE

Each time inflation assembly gaskets or inflation assembly is removed and replaced for any reason, a functional test shall be conducted. Refer to paragraph 24-28. Use new gaskets when replacing device.

4. If any discrepancy is noted in device that is not repairable in accordance with paragraph 24-57 remove assembly and install a new inflation device.

24-35. INFLATION LANYARD INSPECTION. To inspect the inflation lanyard, proceed as follows:

Table 24-4. LPU-28/P Life Preserver Markings

Marking	Location	Letter Height
LIFE PRESERVER	Center of casing between neck opening and waist strap (inside)	1/4 inch
LPU-28/P		1/8 inch
SERIAL NO. [applicable number]		1/8 inch
CONTRACT NO. [applicable number]		1/8 inch
MFR		1/8 inch
DATE OF MFR		1/8 inch

Notes: 1. Replacement markings shall be stamped or stenciled using waterproof yellow ink.
2. The LSC P/N 482 requires the same markings, lettering shall be legible.

1. Ensure that CO_2 cylinder has been removed. Actuate inflation assembly.

2. Examine inflation lanyard for frays, ruptures, thin spots, split casing, and security of knots.

3. Replace unsatisfactory inflation lanyard. Refer to paragraph 24-56.

4. Safety-wire inflation assembly in accordance with paragraph 24-45.

24-36. LEAKAGE TEST. All life preservers shall be subjected to a leakage test each Calendar/Phase Inspection. To perform a leakage test proceed in accordance with paragraph 24-38.

24-37. Test Fixture. A suggested test fixture, consisting of a three-way valve, pressure gage, and adapters for compartments being tested, is shown in Chapter 3. Test fixtures must be fabricated to meet the requirements of the schematic shown in figure 24-2.

24-38. Test Procedure. To test life preservers, proceed as follows:

CAUTION

Ensure test area is free of foreign objects.

1. Ensure carbon dioxide has been removed from preserver which has been functionally tested.

CAUTION

If 3-way valve is not used, measuring device valve must be closed when air feed valve is open.

Damage may occur to oral inflation valve if air supply pressure entering the life preserver exceeds ten (10) psi during this test.

NOTE

If a suitable air source is not available, water-pumped nitrogen (BB-N-411) may be substituted.

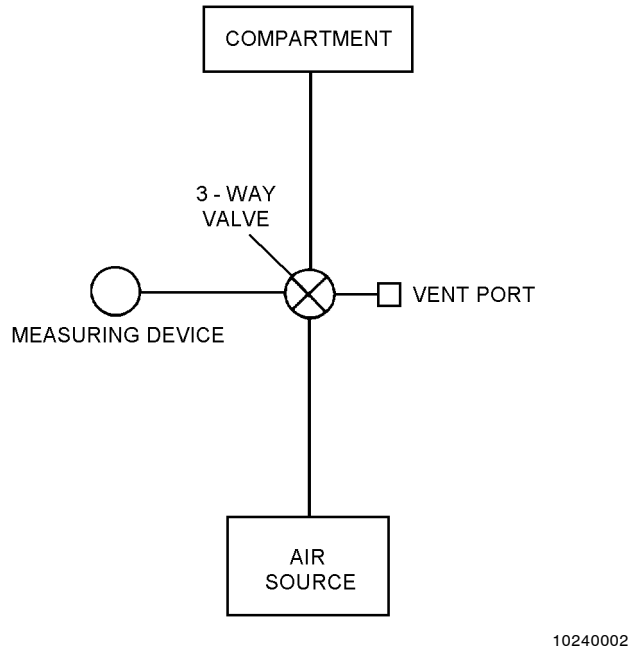

Figure 24-2. Test Fixture Schematic

2. Insert 3/4-inch O.D. rubber hose from test fixture into oral inflation hose mouthpiece. Maintain pressure between rubber hose and oral inflation hose mouthpiece to ensure a good seal. Depress mouthpiece button to open oral inflation valve and alternately position leakage test fixture valve between measuring device, vent and air supply until over pressure relief valve opens (3.5 psig $\pm$1.5 psig). Inspect for proper operation of relief valve. After relief valve test, adjust to proper test pressure of 2.0 psig and release mouthpiece button to close oral inflation valve.

3. The air supply shall be securely shut off and after a minimum of 15 minutes, the pressure shall be readjusted, if necessary, to the leakage test pressure. Record time.

4. Disconnect air supply and check for leaks. Ensure all valves are closed.

5. Record temperature and barometric pressure.

6. After a minimum of 4 hours after completing step 3, record test pressures of the single chamber. Test pressure shall not decrease to less than 1.6 psig for a life preserver chamber, from a maximum test pressure of 2.0 psig.

7. Record temperature and barometric pressure and correct test pressure for any changes in temperature and barometric pressure. Refer to tables 24-5 and 24-6.

EXAMPLE

UNCORRECTED TEST READING 1.70 PSI

	TEMP.	BARO.
START	75° F	29.90 IN. Hg
END	70° F	29.70 IN. Hg
DIFFERENCE	- 5° F	-0.20
CORRECTION	+0.155	-0.098

TEMP. CORRECTION	+ 0.155
+ BARO. CORRECTION	- 0.098
CORRECTION	+ 0.057

UNCORRECTED READING	1.700 PSI
+ CORRECTION	+ 0.057
CORRECTED READING	1.757 PSI

X0036007

Step 7 - Para 24-38

8. If pressure of chamber is below 1.6 psig inflate to leakage test pressure and coat with a soap solution to locate leaks. Mark leak areas. Rinse preserver with fresh water, air dry and repair in accordance with paragraph 24-53.

Table 24-5. Temperature Conversion Chart

Temperature Difference (°F)	Correction (psi)
1	0.031
2	0.062
3	0.093
4	0.124
5	0.155
6	0.186
7	0.217
8	0.248
9	0.279
10	0.310
Rise in temperature: subtract from gage reading. Fall in temperature: add to gage reading.	

9. Deflate preserver in accordance with paragraph 24-29.

10. Ensure that inflation valve lever is cocked. Install CO_2 cylinder in accordance with paragraph 24-44.

24-39. RECORDS UPDATING. Make necessary entries on appropriate form in accordance with OPNAVINST 4790.2 Series.

24-40. CLEANING AND SERVICING.

24-41. Cleaning and servicing consist of cleaning the casing, bladder, and installation of the CO_2 cylinders and, when required, safety wiring of the inflation valve actuating lever.

24-42. CLEANING OF LIFE PRESERVER CASINGS/BLADDER. To clean, machine washing is preferred on casings. Alternate method is by hand. Remove radio and other detachable items and proceed as follows:

Materials Required

Quantity	Description	Reference Number
As Required	Detergent, General Purpose	MIL-D-16791 NIIN 00-282-9699
As Required	Cloth, Lint-Free, Type II	MIL-C-85043 NIIN 00-044-9281
As Required	Talc, Technical	MIL-T-50036A IIN 01-080-9589

CAUTION

Solvents are not to be used in cleaning life preservers.

1. Prepare solution of detergent (MIL-D-16791) consisting of 1/4 to 1/2 ounce of detergent per gallon of water.

2. Apply cleaning solution to soiled area with a spray or sponge.

3. Allow solution to remain on surface for several minutes, then agitate with a soft brush or rag.

Table 24-6. Barometric Pressure Conversion Chart

Press. Diff. (inHG)	Corr. (psi)	Press. Diff. (inHG)	Corr. (psi)	Press. Diff. (inHG)	Corr. (psi)	Press. Diff. (inHG)	Corr. (psi)	Press. Diff. (inHG)	Corr. (psi)
0.01	0.005	0.16	0.078	0.31	0.152	0.46	0.225	0.61	0.299
0.02	0.010	0.17	0.083	0.32	0.157	0.47	0.230	0.62	0.304
0.03	0.015	0.18	0.088	0.33	0.162	0.48	0.235	0.63	0.309
0.04	0.020	0.19	0.093	0.34	0.167	0.49	0.240	0.64	0.314
0.05	0.025	0.20	0.098	0.35	0.172	0.50	0.245	0.65	0.319
0.06	0.030	0.21	0.103	0.36	0.176	0.51	0.250	0.66	0.323
0.07	0.035	0.22	0.108	0.37	0.181	0.52	0.254	0.67	0.328
0.08	0.040	0.23	0.113	0.38	0.186	0.53	0.260	0.68	0.333
0.09	0.045	0.24	0.118	0.39	0.191	0.54	0.265	0.69	0.338
0.10	0.049	0.25	0.123	0.40	0.196	0.55	0.270	0.70	0.343
0.11	0.054	0.26	0.127	0.41	0.201	0.56	0.275	0.71	0.348
0.12	0.060	0.27	0.132	0.42	0.206	0.57	0.279	0.72	0.353
0.13	0.064	0.28	0.137	0.43	0.211	0.58	0.284	0.73	0.358
0.14	0.069	0.29	0.142	0.44	0.216	0.59	0.289	0.74	0.363
0.15	0.073	0.30	0.147	0.45	0.221	0.60	0.294	0.75	0.368

Rise in pressure: add to gage reading.
Fall in pressure: subtract from gage reading.

4. Rinse surface thoroughly with water; wipe with a cloth or sponge. Repeat this application until surface is free from all solution.

5. Dry casing before use and dry bladder with a lint-free cloth (MIL-C-85043). Apply a light coating of talc (MIL-T-50036A).

24-43. SALTWATER DECONTAMINATION (Soniform Model P/N SF8580). After every immersion in salt water, the LPU-28/P (Soniform Model P/N SF8580) life preserver shall be rinsed in clean fresh water as follows:

1. Open casing and rinse in fresh water.

2. Depress oral inflation valve and partially fill bladder with fresh water only. Do not use any detergent.

3. Inflate life preserver with air source.

4. Shake life preserver to thoroughly rinse bladder.

5. Hold with oral inflation hose at lowest position. Depress oral inflation valve and allow water to drain.

6. Repeat steps 2 through 5 one or two times.

7. Disconnect oral inflation hose at bladder and allow to dry.

24-43A. SALTWATER DECONTAMINATION (LSC P/N 482). After every immersion in salt water, the LPU-28A/P (LSC P/N 482) life preserver shall be rinsed in clean fresh water as follows:

Support Equipment Required

Quantity	Description	Reference Number
1	Wrench, 9/16-inch	—
1	Tool, Valve Core	8769A or equivalent (CAGE 27783) NIIN 01-354-5423

1. Open casing and rinse in fresh water.

2. Inspect bladder to see if salt water has entered bladder internally. If salt water is not present inside bladder, disregard steps 3 thru 13 and allow life preserver to dry. If salt water is present in bladder, steps 3 thru 13 must be completed.

3. Depress oral inflation valve and partially fill bladder with fresh water only. Do not use detergent.

4. Inflate life preserver from shop air source.

5. Shake life preserver to thoroughly rinse bladder.

6. Remove cap nut and inflator from valve stem, discard top and bottom gaskets.

7. Remove check valve from inflator stem and discard.

8. Allow water to drain from bladder out valve stem.

9. Depress oral inflation valve and allow fresh water to flow through bladder, turning bladder so all areas receive water flow.

10. Using shop air source, blow out excess water by applying shop air through oral inflation valve allowing water to drain out valve stem. Hang life preserver and allow to dry.

11. Install new check valve in accordance with paragraph 24-59.

12. Install new gaskets and removed inflator in accordance with paragraph 24-58.

13. Perform leakage test in accordance with paragraph 24-36.

24-44. INSTALLATION OF CO_2 CYLINDER. To install CO_2 cylinder, proceed as follows:

Support Equipment Required

Quantity	Description	Reference Number
1	Scale (Gram)	A-A-52021-1 NIIN 00-514-4117 or equivalent
1	Die, Cylinder Thread Chaser	1842-008-01 (CAGE 03688) NIIN 00-069-4040

Materials Required

Quantity	Description	Reference Number
1	Seat Seal	849AML NIIN 01-291-3593
1	Cylinder, CO_2	MIL-C-25369 Type II, 28 - 31 Gram NIIN 00-543-6693

NOTE

Weight of charged cylinder will vary according to manufacturer.

1. Weigh a charged cylinder and compare the minimum stamped weight with the scale weight. Discard and replace cylinder if scale weight is 2 grams less than minimum stamped weight.

2. The LPU-28/P life preserver inflation assembly consists of an inflator P/N 3063 (NIIN 01-218-6737) and a CO_2 cylinder MIL-C-25369, Type II, 28 to 31 gram (NIIN 00-543-6693).

3. Ensure that inflator lever is in a closed position.

CAUTION

Steel threads on CO_2 cylinder can cause damage to aluminum threads on inflator if cylinder is not carefully threaded. If binding occurs during installation of cylinder, use thread chaser die on cylinder thread to cut free excessive plating. Reinstall cylinder. If binding still occurs, replace cylinder.

4. To assure a firm cylinder seat, conduct a cylinder thread count. Threaded portion of cylinder neck shall contain a minimum of seven full threads to assure a firm cylinder seat within valve body. Any cylinder found with less than seven full threads shall be discarded. See figure 24-3.

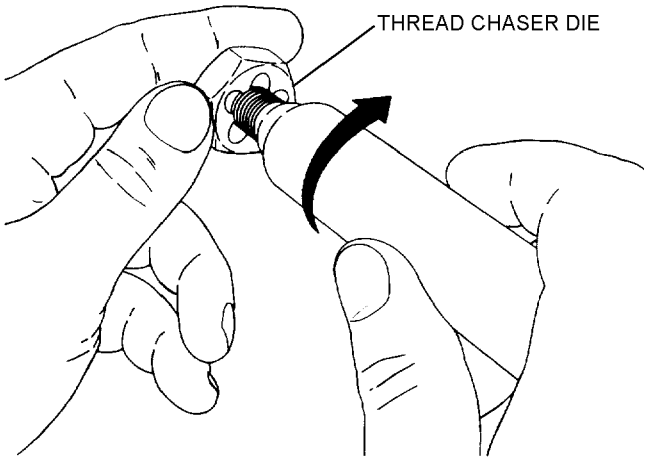

X0044004

Step 4 - Para 24-44

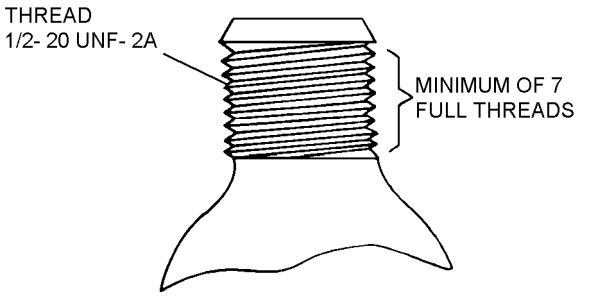

10240003

Figure 24-3. Cylinder Thread Count

5. After performing functional test, insert a new seat seal gasket from kit. At intermediate inspection intervals, inspect condition of gasket and replace if necessary.

6. Install CO_2 cylinder into inflator body as far as hand twisting will permit.

NOTE

When replacing CO_2 cylinder, ensure that CO_2 cylinder passes through the holding loop.

7. Safety-wire inflator as required in accordance with paragraph 24-45.

8. Secure inflation valve protective cover.

THIS PAGE INTENTIONALLY LEFT BLANK.

24-45. SAFETY-WIRING. To safety-wire the inflation assembly, proceed as follows:

Materials Required

Quantity	Description	Reference Number
As Required	Copper Wire, Uncoated, Type S, 0.0159-inch Diameter	QQ-W-343 NIIN 00-236-9501

1. Pass a single strand of uncoated, 0.0159-inch Type S copper wire through hole in inflation assembly body and through hole in actuation lever.

2. Twist the wire a minimum of four times and trim the excess.

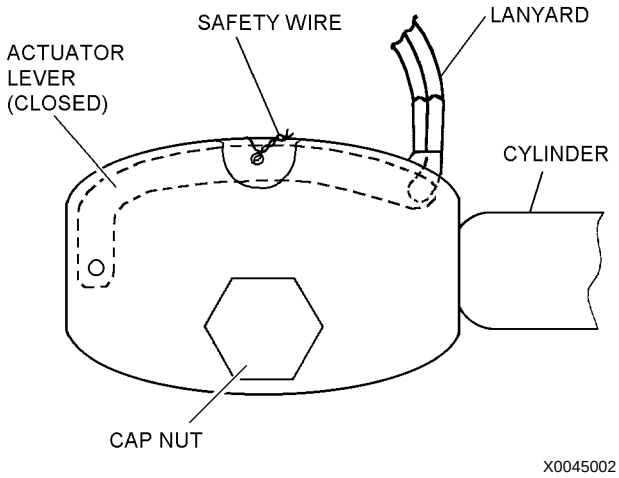

Step 2 - Para 24-45

24-46. REPAIR/REPLACEMENT.

24-47. These instructions for the repair or fabrication of various components or subassemblies of life preservers are to ensure that appropriate items of equipment remain in Ready For Issue (RFI) status. Reference numbers for parts which are defective, corroded or worn and require replacement are included in the applicable paragraph in this chapter.

24-48. Replacement of easily removed assembly components such as CO_2 inflation valve is authorized in addition to repair and replacement procedures documented in this chapter. The life preserver shall be subjected to a functional and leakage test each time CO_2 inflation valve is removed and replaced for any reason, and each time inflation valve gaskets are replaced.

24-49. DETERMINATION OF REPAIRABILITY. Patching of holes, cuts, tears or punctures 1-inch square or less are the only repairs authorized in a life preserver bladder.

24-50. Life preserver shall be considered beyond repair for any of the following reasons:

1. Porous fabric areas on flotation bladder.

2. Split or open bladder seams.

3. Leakage test failure resulting from other than repairable cut, tear or puncture.

4. Holes, cuts, tears or punctures within 1 inch of flotation bladder seams.

5. Deterioration of the rubberized fabric caused by oil, grease, or any other foreign substance.

6. Deterioration of the rubberized fabric caused by a heavy mildewed condition.

24-51. CASING REPAIR PROCEDURES. To repair casings, proceed as follows:

Materials Required

Quantity	Description	Reference Number
As Required	Thread, Nylon, High Temperature Resistant, Sage Green	MIL-T-83193 NIIN 00-405-2252
	-or-	
As Required	Thread, Nylon, Type II, Size E, Sage Green	V-T-295 NIIN 00-204-3884

Materials Required (Cont)

Quantity	Description	Reference Number
As Required	Cloth, Aramid, Non-melting, Type 456, Class I, Sage Green	MIL-C-83429 NIIN 01-142-2064
As Required	Tape, Hook, Type II, Black	MIL-F-21840 NIIN 01-115-7617
As Required	Tape, Pile, Type II, Black	MIL-F-21840 NIIN 01-978-0113

1. Minor holes, rips, tears, or abrasions in casing assembly may be repaired if they do not exceed 2 inches.

2. Repair or replace loose or damaged hook and pile tape as required.

3. Remove bladder in areas being repaired.

4. For all repairs plus loose or broken stitching use 6 to 8 stitches per inch and back stitch one half inch.

5. Casing assembly worn beyond economical repair shall be discarded.

24-52. CEMENTING LIFE PRESERVERS. Cementing of bladder shall be performed as follows:

Materials Required

Quantity	Description	Reference Number
1	Threaded Access Fitting Tool	5000-0000 (CAGE 58293) (See Note 1)
As Required	Cement (Clear Medium Bodied)	MIL-A-22010 NIIN 00-573-1502
As Required	Methyl Ethyl Ketone (MEK)	TT-M-261 NIIN 00-281-2762

Materials Required (Cont)

Quantity	Description	Reference Number
As Required	Cloth, Lint Free, Type II	MIL-C-85043 NIIN 00-014-9281

Note: Threaded Access Fitting Tool (5000-0000) may be open purchased ($15) from:
Soniform, Inc. (CAGE 58293)
1908 Friendship Drive
El Cajon, CA 92020-11129
Tel: 619-562-3681
Fax: 619-562-3648

WARNING

Do not use cement or MEK near open flame, heat or electrical sparks. Avoid prolonged contact with skin or breathing of fumes. Use only in well ventilated area.

CAUTION

The LPU-28/P Life Preserver Flotation Assembly is constructed of polyurethane film. Only cement MIL-A-22010, and patches constructed from 5004 type material shall be used. Use only MEK to prepare polyurethane film flotation assemblies for cementing.

1. Remove bladder in accordance with paragraph 24-60.

2. Clean both surfaces to be cemented with MEK and lint-free cloth. Allow areas to dry.

3. Using a small brush, apply and smooth out a small amount of cement to both surfaces to be cemented.

4. Immediately place pieces together. If cemented area has a cut or tear, butt edges of damage before applying patch. Roll out bubbles with a wooden or rubber roller. Inspect for proper application/cement.

5. Place a small weight over cemented area and allow to cure a minimum of 48 hours.

24-53. PATCHING LIFE PRESERVERS. Patching shall be performed as follows:

NOTE

The LSC P/N 482 bladder will not be patched. If it fails leak check, it shall be condemned.

CAUTION

The LPU-28/P Life Preserver Flotation Assembly is constructed of polyurethane film. Only cement MIL-A-22010, and patches constructed from 5004 type material shall be used.

NOTE

Life Preserver is not repairable if it has holes, cuts, tears, or punctures over one-inch square.

Materials Required

Quantity	Description	Reference Number
As Required	Bladder Patches	5004 (CAGE 58293)

1. Cut a rounded patch 1 inch larger than damage on all sides.

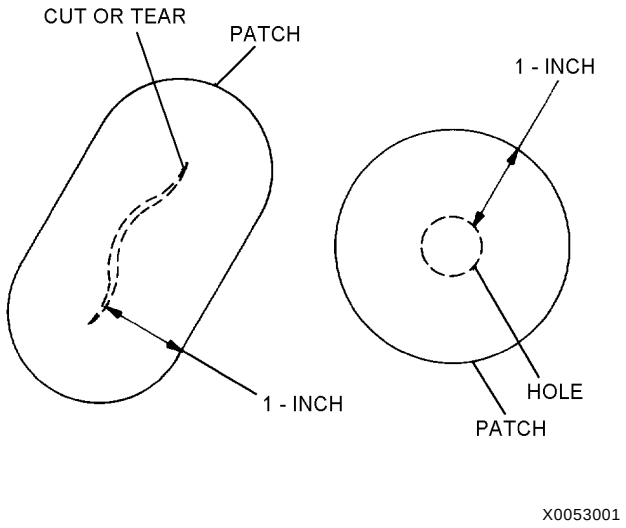

Step 1 - Para 24-53

2. Center patch over damaged area and trace an outline of patch on fabric.

3. Cement patch to damaged area in accordance with paragraph 24-52.

4. Perform leakage test in accordance with paragraph 24-36.

24-54. INSPECTION RECORD PATCH.

NOTE

The 28th In-Service Management Panel meeting for Aviation Life Support Systems rescinded the requirement for the packer to sign the Inspection Record Patch on life preservers. The requirement for all other documentation remains unchanged. The reason for this change is that most history patches are unreadable and the packer's and inspector's names are documented on Aviation Crew Systems Records.

Figure 24-4 Deleted.

24-55. RECEMENTING OF BLADDER FIN SEAMS. This repair shall be performed only if a flotation bladder does not leak, that is, if only outer seam around bladder is split or separating. To recement an open fin seam proceed as follows:

1. If fin seam is not leaking, recement open material surrounding flotation bladder in accordance with paragraph 24-52.

2. Perform a leakage test in accordance with paragraph 24-36.

CAUTION

Recementing of ruptured fin seams is not authorized for heat sealed life preservers.

NOTE

If bladder exhibits leakage from fin seam, bladder cell has ruptured. Dispose of life preserver after usable parts have been salvaged.

24-56. REPLACEMENT OF LANYARD CORD. To replace lanyard cord, proceed as follows:

Materials Required

Quantity	Description	Reference Number
11 inches	Cord, Nylon, Type I (color optional)	MIL-C-5040

1. Carefully remove carbon dioxide cylinder from the inflator assembly.

2. If desired, remove nut and rubber gasket retaining the inflator and remove inflator and lanyard assembly.

3. Cut lanyard to be replaced and discard.

4. Fold the 11-inch length of cord in half, pass folded end through hole in end of inflator lever and tie the cord strands with a lark's head knot.

5. Pass the cord strands through the small sleeve attached to casing.

6. Thread both cord strands through the single hole at the top of the knob and tie a binder knot four inches from the lever end.

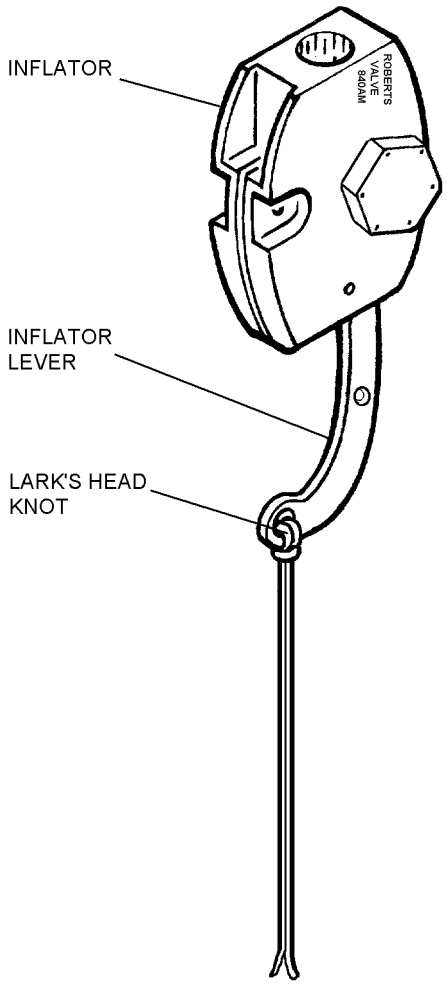

X0056004

Step 4 - Para 24-56

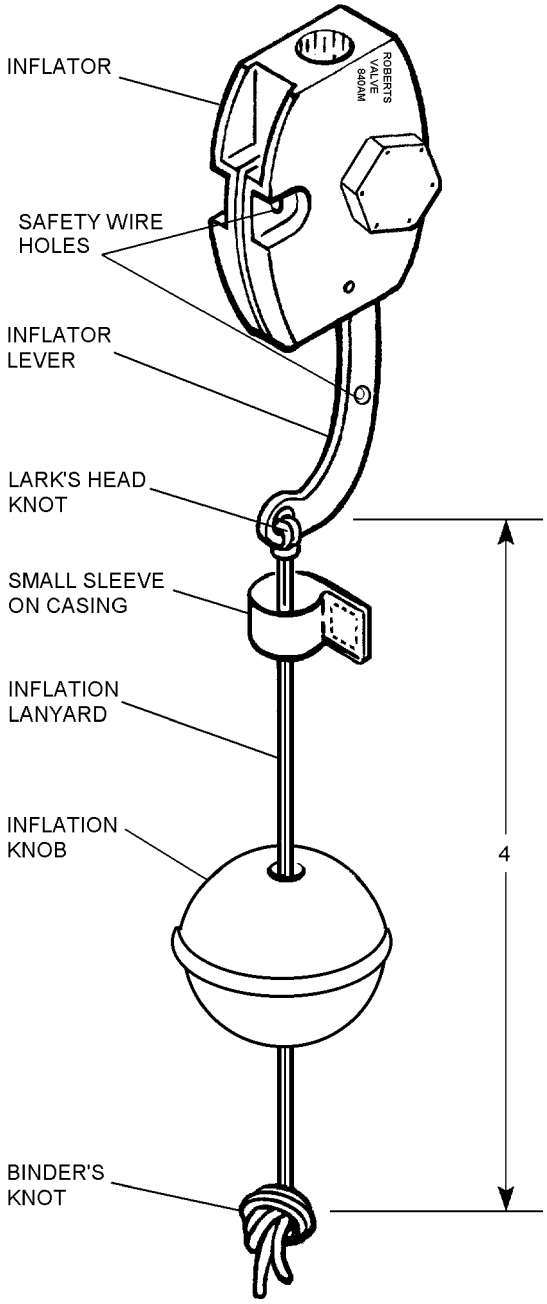

X0056006

Step 6 - Para 24-56

7. Reinstall inflator assembly in accordance with paragraph 24-58. Safety wire in accordance with paragraph 24-45. Reinstall CO_2 cylinder in accordance with paragraph 24-44.

24-57. REPAIR OF CORRODED CO_2 INFLATION VALVE. To repair CO_2 inflation valve, proceed as follows:

NOTE

No repairs are authorized for the inflation valve on the LSC P/N 482. If it fails, it shall be replaced.

Materials Required

Quantity	Description	Reference Number
As Required	Lubricant, Silicone	DC7 (CAGE 71984) NIIN 00-975-0712
1	Valve Stem Kit (Note 1)	105AS100-6 (CAGE 30003) NIIN 00-113-8290
1	Seat Seal	849AML NIIN 01-291-3593
As Required	Cloth, Emery No. 240	-
1	Valve, Inflation	3063 (CAGE 50293) NIIN 01-218-6737
As Required	Abrasive Mat	MIL-A-9962 NIIN 00-967-5093
As Required	Corrosion Preventive Compound (Amiguard) Type I	MIL-C-85054 NIIN 01-041-1596

Notes: 1. Valve Stem Kit, P/N 105AS100-6, NIIN 00-113-8290, contains one top and one bottom gasket.

1. Remove CO_2 cylinder from valve.

2. Remove cap nut. Remove inflation valve from preserver. Discard two gaskets on valve stem.

3. Remove grooved taper pin (retaining lever) from inflation valve, using awl and mallet. See figure 24-5.

4. Remove lever, spring, and piercing pin. If spring is broken or corroded, replace entire valve.

5. If piercing pin or actuating lever is corroded, remove corrosion with abrasive mat. If abrasive mat is ineffective, use 240 grit emery cloth. Do not damage O-ring on piercing pin. Wipe off any dirt or moisture from actuating lever and apply a thin coat of MIL-C-85054 and allow to dry.

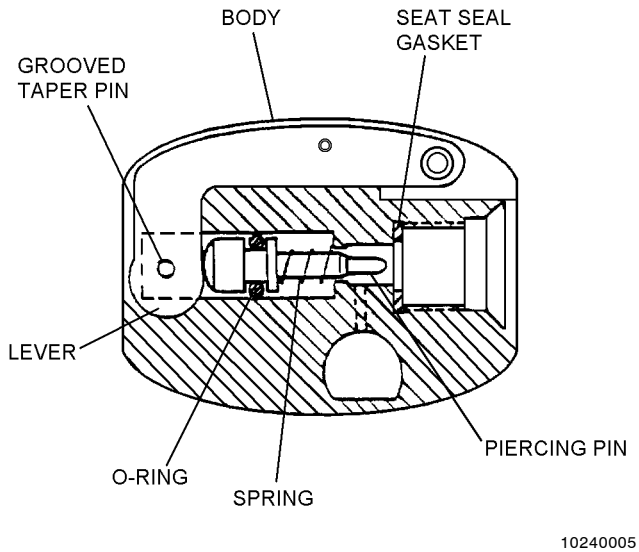

Figure 24-5. CO_2 Inflation Assembly

6. Clean residue from actuating lever on piercing pin. Lightly coat base of piercing pin with silicone lubricant.

7. Reassemble inflation valve and operate actuating lever three or four times. Ensure that lever and piercing pin move freely.

8. If piercing pin and lever do not move freely, obtain replacement valve.

9. Reinstall inflation valve on life preserver using new gaskets.

10. Install cap nut onto valve stem and torque to a value of 8 ±1 in-lb.

11. Reinstall new seat seal gasket and CO_2 cylinder.

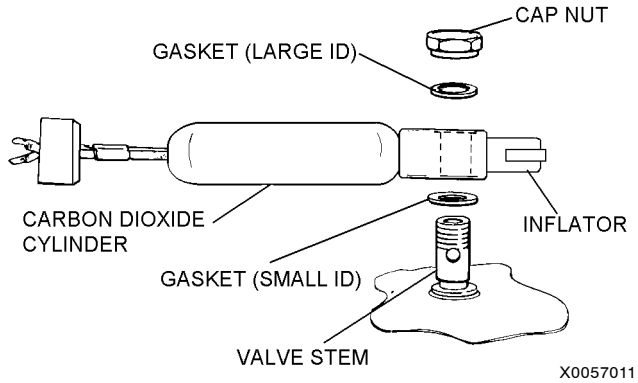

Step 11 - Para 24-57

24-58. REPLACEMENT OF TOP AND BOTTOM GASKETS. To replace the top and bottom gaskets on the inflator, proceed as follows:

Support Equipment Required

Quantity	Description	Reference Number
1	Wrench, 9/16-inch	—

Materials Required

Quantity	Description	Reference Number
1	Valve Stem Kit (Note 1)	105AS100-6 (CAGE 30003) NIIN 00-113-8290

Notes: 1. Top and bottom gaskets are obtained from Valve Stem Kit, P/N 105AS100-6, NIIN 00-113-8290, which contains one top and one bottom gasket.

1. Remove cap nut and top gasket from inflator.

WARNING

Ensure that gaskets are properly positioned. The top gasket has a larger internal diameter than the bottom gasket.

2. Remove inflator and replace bottom gasket.

3. Carefully place inflator onto valve stem.

4. Install top gasket onto valve stem.

5. Tighten cap nut onto valve stem and torque to a value of 8 ±1 in-lb.

6. Perform functional and leakage tests. Refer to paragraphs 24-28 and 24-36.

24-59. REPLACEMENT OF CHECK VALVE ASSEMBLY. To replace a defective check valve assembly, proceed as follows:

Support Equipment Required

Quantity	Description	Reference Number
1	Tool, Valve Core	8769A or equivalent (CAGE 27783) NIIN 01-354-5423
1	Wrench, Torque	—

Materials Required

Quantity	Description	Reference Number
1	Valve, Pneumatic Inflator (Check Valve Assembly) (Note 1)	Schrader-Bridgeport P/N 8457500047

Notes: 1. Schrader-Bridgeport P/N 8457500047 must be open purchased from:
Schrader-Bridgeport Intl
205 Frazier Rd
P.O. Box 668
Altivista, VA 24517
Phone (804) 369-8875

1. If not available, fabricate a valve core tool as shown in Chapter 3.

2. Remove inflator cap nut.

3. Insert valve core tool and unscrew check valve from valve stem.

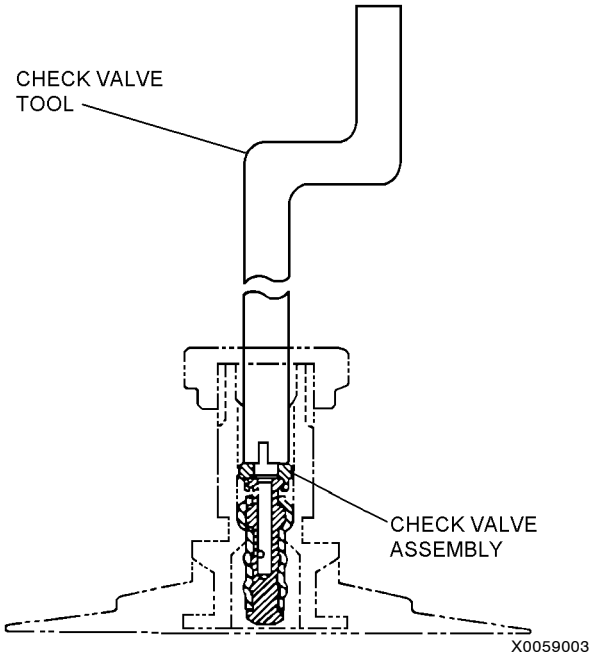

Step 3 - Para 24-59

4. Insert new check valve in valve stem and tighten with valve core tool hand tight.

5. Replace cap nut and torque to a value of 8 ±1 in-lb.

6. Perform a functional and leakage test on life preserver cell that was repaired. Refer to paragraphs 24-28 and 24-36.

24-60. DISASSEMBLY OF THE LIFE PRESERVER. To disassemble for bladder or case repairs, proceed as follows:

NOTE

This paragraph does not apply to the LSC P/N 482.

Support Equipment Required

Quantity	Description	Reference Number
1	Spare Parts/ Repair Kit	8590 (CAGE 58293)
1	Threaded Access Fitting Tool	5000 (CAGE 58923) (See Note)

Note: The Spare Parts/Repair Kit 8590-0000 contains the Threaded Access Fitting Tool 5000-0000. The Spare Parts/Repair Kit 8590-0000 and Threaded Access Fitting Tool 5000-0000 may be open purchased from:

Soniform, Inc. (CAGE 58293)
1908 Friendship Drive
El Cajon, CA 92020-1129
Tel: 619-562-3681
Fax: 619-562-3648

1. Remove the CO_2 cylinder.

2. Remove elbow-oral inflating hose assembly. See paragraph 24-62 and figure 24-6.

3. Remove the pressure relief valve. See paragraph 24-63 and figure 24-7.

4. Untie the knot in the lanyard and remove the round pull knob. Unscrew the cap on the inflator assembly and remove the inflator assembly.

5. Remove the threaded access fittings. Grip the internal fitting from the back of the casing and through the fabric of the vest, insert the special knurled tool (furnished with the spare parts/test kit) into the external fitting and unscrew from the casing. Care should be taken not to damage the circular sealing ridges on the external fitting. In some cases it may be necessary to grip the external fitting with channel-lock pliers to unscrew it (this destroys the fitting and requires replacement). Remove the internal fitting through the hole in the bladder and fabric envelope.

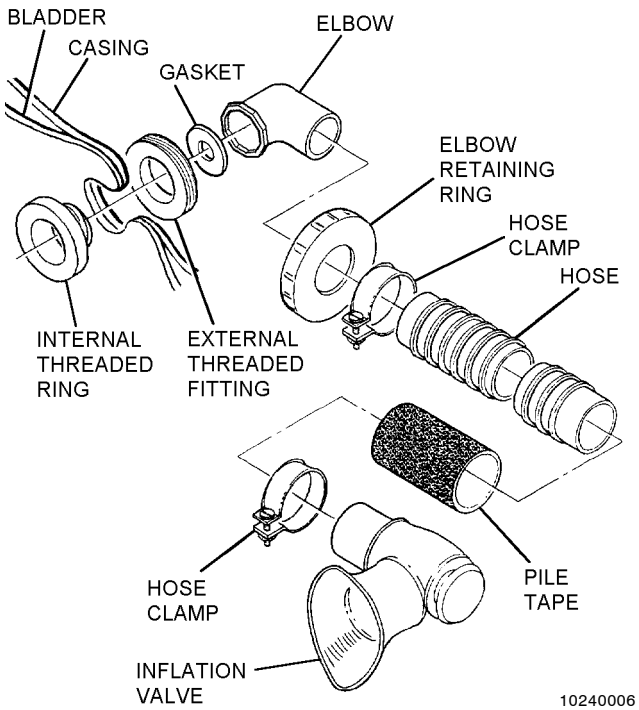

Figure 24-6. Elbow-Oral Inflating Hose

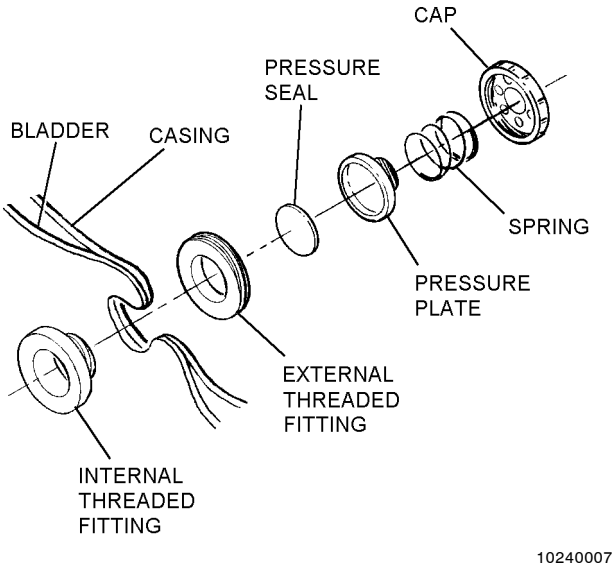

Figure 24-7. Pressure Relief Valve

6. Unzip the zipper around the neck opening and in the outer envelope. Remove the bladder from outer envelope.

24-61. REASSEMBLY OF THE LIFE PRESERVER. To reassemble, proceed as follows:

NOTE

This paragraph does not apply to the LSC P/N 482.

Support Equipment Required

Quantity	Description	Reference Number
1	Threaded Access Fitting Tool	5000 (CAGE 58293)

Materials Required

Quantity	Description	Reference Number
As Required	RTV Silicone Rubber, Sealant	NIIN 00-843-0802
As Required	Isopropyl Alcohol	TT-I-735A

1. Carefully clean and inspect all fittings and seals. Remove RTV with alcohol. Replace damaged or worn fittings as required.

2. Insert the bladder into the fabric outer envelope and position so that bladder lies as flat as possible. Align holes in bladder with those in envelope.

3. Install the threaded access fittings. Insert the internal threaded fitting into the bladder through the corresponding holes in the envelope and bladder. Position so that the face of the fitting with the four notches is away from the access hole in the bladder. Lay the casing out flat and carefully align the access holes in the envelope and bladder with the internal threaded-fitting.

CAUTION

Do not allow RTV sealant to contact any surface other than the threaded portion of fitting.

4. Apply a thin coat of the RTV sealant to the small (1-inch) diameter threads of the external threaded fitting and to the adjacent surface with the two small circular ridges. Allow the RTV to cure for 10 to 20 seconds, then engage the threads of the external fitting into the internal fitting and using the special knurled tool, hand tighten to a firm, snug fit (30 to 40 in-lb). Inspect for proper position and tightness of fittings.

5. Install the CO_2 inflation assembly using the new top and bottom gaskets. Inspect for proper installation.

6. Install lanyard cord through channel on casing. Reinstall round pull knob and retie binder knot four inches from the lever end.

7. Install pressure relief valve. See paragraph 24-63 and figure 24-7.

8. Install elbow-oral inflating hose assembly. See paragraph 24-62 and figure 24-6.

9. Install CO_2 cylinder.

24-62. REPLACEMENT OF COMPONENTS FOR ELBOW-ORAL INFLATING HOSE. To replace the oral inflating components, proceed as follows:

NOTE

This paragraph does not apply to the LSC P/N 482.

Materials Required

Quantity	Description	Reference Number
As Required	Isopropyl Alcohol	TT-I-735A
As Required	Silicone Compound	G624 NIIN 00-880-7616
As Required	Thread Sealing Compound	NIIN 00-822-3505

1. Grip the elbow and unscrew the black plastic retaining ring without allowing the elbow to rotate.

2. Remove the elbow-oral inflating hose, including the thick rubber gasket under the elbow.

3. Check the condition of thick rubber gasket for cleanliness and wear.

4. Clean sealing surface with isopropyl alcohol. Replace gasket if necessary.

5. Loosen hose clamp then remove hose from elbow. Check elbow for cracks, or damage, replace if necessary.

6. Check hose for tears, holes, or wear, replace if necessary.

7. Loosen hose clamp then remove inflation valve from hose. Check for wear, damage and security of rubber mouthpiece.

8. Check hook and pile tape on hose and casing for secure attachment.

9. Check hose clamps for corrosion, wear and security. Replace if necessary.

10. Check hose clamps for corrosion, wear, and security. Replace if necessary.

11. Reinstall each component in order of removal (see figure 24-6).

12. Place thick rubber gasket between threaded access fitting and elbow. Use small dab of silicone compound (G624) to help hold gasket.

13. Grip the elbow and screw the black plastic retaining ring without allowing the elbow to rotate.

24-63. REPLACEMENT OF PRESSURE RELIEF VALVE SEAL GASKET. To replace the pressure relief valve seal gasket, proceed as follows:

NOTE

This paragraph does not apply to the LSC P/N 482.

Materials Required

Quantity	Description	Reference Number
As Required	Isopropyl Alcohol	TT-I-735A
As Required	Silicone Compound	G624 NIIN 00-880-7616
1	Gasket, Pressure Seal	NIIN 01-098-7457
As Required	RTV Silicone Rubber, Sealant	NIIN 00-843-0802

1. Turn cap counterclockwise and remove.

2. Remove spring and pressure plate from valve body (see figure 24-7).

3. Remove damaged pressure seal gasket from pressure plate and carefully clean and inspect all fittings. Remove sealing compound with alcohol.

4. Replace damaged or worn fittings as required. Use RTV sealant as necessary.

5. Apply a small dab of silicone compound (G624) to the center of one side of the new pressure seal gasket and stick it to the plastic pressure plate.

6. Install spring and then screw pressure relief valve cap onto threaded access fitting, turning it clockwise as far as it will go.

7. Subject to functional and leakage test. Refer to paragraph 24-28 and 24-36.

24-64. FABRICATION OF AN/PRC-125 RADIO STOWAGE ASSEMBLY AND MODIFICATION FOR STOWAGE OF THE AN/PRC-149 RADIO. Some production model LPU-28/P life preservers come rigged to accept an AN/PRT-125 radio. There is a channel for the earphone and cable vice the velcro flap assembly. To modify life preservers that have no rigging for radio stowage, proceed from step 1. To modify a life preserver rigged with an earphone and cable channel to a velcro flap, proceed from step 8.

Materials Required

Quantity	Description	Reference Number
18-inch Length	Webbing, Tape, Nylon, 3-inch Sage Green	MIL-W-25361 NSN 8300-00-543-7939
8-inch Length	Pile, Tape, 2-inch, Black	MIL-F-21840 NSN 8315-00-926-4930
8-inch Length	Hook Tape, 2-inch, Black	MIL-F-21840 NSN 8315-00-926-4931
As Required	Thread, Nylon, Size E, Olive Drab	V-T-295
24-inch Length	Cord, Nylon Type 1	MIL-C-5040 NIIN 00-240-2154

NOTE

All stitching shall be made using 301 lockstitch, 8 to 10 stitches per inch with size E thread. Backstitch a minimum of 1/2 inch at ends of all stitching.

1. Fabricate antenna stowage sleeve as follows:

a. Cut one 8-inch piece of 3-inch webbing and sear ends.

b. Lay webbing out left to right on worktable. Starting from the left-hand lower corner of the webbing, make a mark 2-1/2-inches along bottom edge of 8-inch length of webbing, and make a mark 2-inches high at left-hand end. Mark an angled line between these two marks. Fold webbing under along marked angled line and stitch 1/4-inch from fold. Fold the right-hand end of webbing under by 1/2-inch and stitch 1/4-inch in from fold. Finish length shall be 7-1/2 inches.

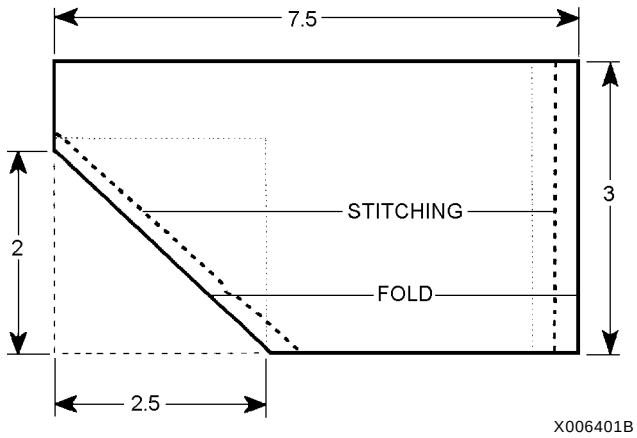

Step 1b - Para 24-64

2. Fabricate earphone and cable stowage cover flaps as follows:

a. Cut two 5-inch pieces of 3-inch webbing and sear ends.

b. Fold each webbing end under by 1/2-inch and stitch 1/4-inch from fold. Each piece of 3-inch webbing should measure 4-inches long after stitching.

c. Cut two 4-inch long pieces of 2-inch pile tape.

d. Cut two 4-inch long pieces of 2-inch hook tape.

e. Sandwich one piece of webbing between one piece of pile tape and one piece of hook tape. Position webbing, pile and hook tapes so the 4-inch dimension for the three parts match up, and both pile and hook tapes are on the same edge of the webbing. The webbing will be uncovered in a 1-inch by 4-inch area. Ensure pile tape is stitched to finished side of material. Stitch sandwich together using a cross box stitch, 1/4-inch from sides of pile and hook tapes.

f. Repeat step e using remaining webbing, pile tape and hook tape.

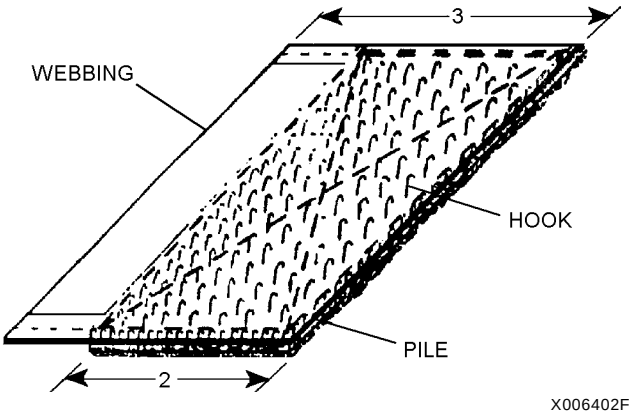

Step 2f - Para 24-64

3. For ease during sewing, unzip casing on LPU-28/P and remove oral inflation assembly.

4. Remove 2-inch by 3-inch miscellaneous equipment mount pile tape from top front of casing near oral inflation assembly. This pile tape is no longer required.

NOTE

SAR-1 life preservers did not have this pile tape installed.

5. Installation of antenna stowage and earphone and cable stowage over flaps.

a. Center top (longest) edge of antenna stowage sleeve on front of casing to gusset hem, approximately 3/4-inch from hemline.

b. Turn antenna stowage sleeve at slight angle so that right-hand bottom corner is turned 3/8-inch higher towards centerline of oral elbow flange nut. Mark location.

c. If needed adjust sleeve to fit on casing fabric. Stitch antenna stowage sleeve to casing, ensuring only top and bottom edges are stitched.

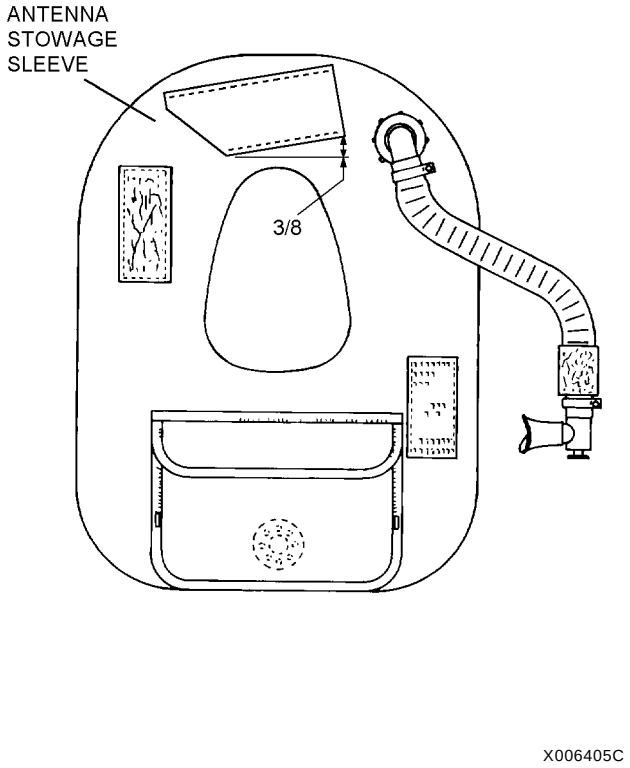

Step 5c - Para 24-64

d. Position one earphone and cable stowage flap on the front left casing, under the distress light mount pile tape. Ensure flap pile tape is facing up. Turn the flap so that the uncovered webbing points towards casing outer seamline, and move flap up or down so flap is approximately 3/4-inch up from outer hem of casing pocket. Stitch left earphone and cable stowage flap to casing, 1/4-inch in along uncovered edge of flap webbing.

e. Position the remaining earphone and cable stowage flap so the uncovered webbing is pointed towards the right (towards the centerline of the casing), the pile tape is facing up, and the bottom edge of the flap is approximately 3/4-inch up from hem of casing pocket. Adjust the position of the right flap so the edge of the uncovered webbing will be approximately 3 1/4-inches from the left flap-to-casing stitching. Stitch right earphone and cable stowage flap to casing, 1/4-inch in along uncovered edge of flap webbing. When completed the distance between the flap seams will be 3 inches.

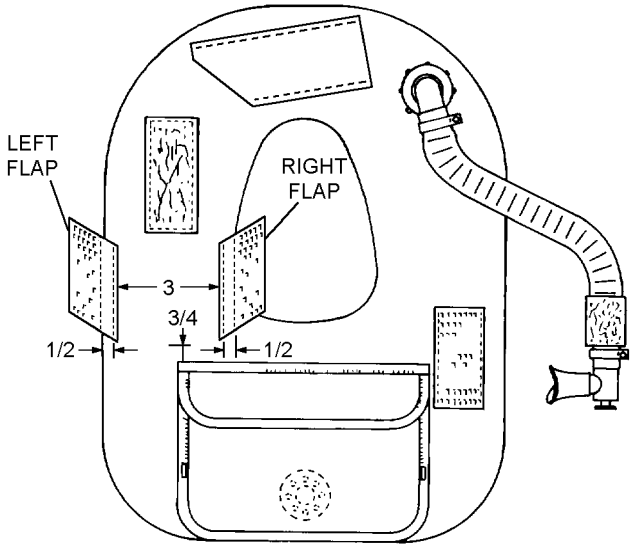

Step 5e - Para 24-64

6. Zip casing back onto LPU-28/P and reinstall oral inflation assembly. Conduct leakage test.

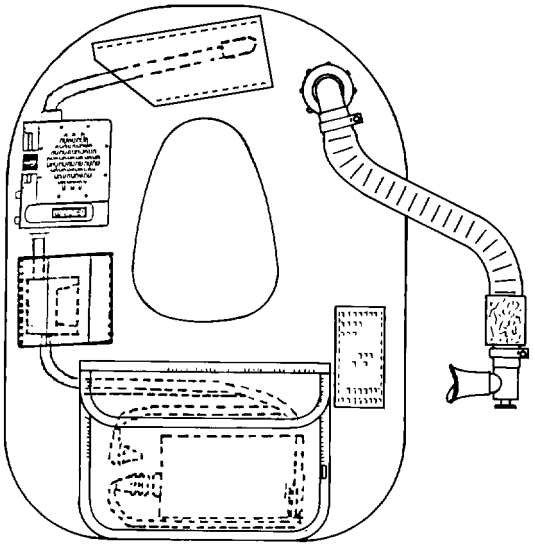

AN/PRC-125 STOWAGE IN THE LPU-28/P

X0064006

Step 6 - Para 24-64

7. Using a 24-inch length of Type 1 nylon cord, secure radio to the LPU-28/P. Using bowline knots, tie one end to radio and the opposite end to the loop under flap of pocket. Stow the AN/PRC-125 in pocket as required.

NOTE

The following steps are required to convert the earphone and cable channel to a velcro flap for use with the AN/PRC-149 radio.

8. Unzip life preserver casing so bladder can be repositioned during sewing.

9. Remove existing earphone and cable channel from casing by carefully cutting stitching.

10. Fabricate two earphone and cable stowage flaps in accordance with step 2 (paragraph 24-64) with the following modifications: the webbing pieces should be 4 inches long and the hook and pile tape pieces should be 3 inches.

11. Install manufactured flaps in accordance with steps 5d and 5e.

12. Reposition bladder to proper position and close casing with zipper/slider.

13. Ensure installed radio is secured with a 24-inch length of type 1 nylon cord.

24-65. PACKING PROCEDURE FOR THE LPU-28/P LIFE PRESERVER ASSEMBLY.

24-66. The LPU-28/P Life Preserver is not folded or packed in a carrying case or pouch. Ensure that preserver has been inspected in accordance with paragraph 24-17. For cleaning and servicing refer to paragraph 24-40.

Section 24-4. Illustrated Parts Breakdown (IPB)

NOTE

This section does not apply to the LSC P/N 482. Any parts required must be procured open purchase through:

Lifesavings Systems Corp.
220 Elsberry Road
Apollo Beach, FL 33572-2289
Phone (813) 645-2748
(CAGE 64249).

24-67. GENERAL.

24-68. This section lists and illustrates the assemblies and detail of the LPU-28/P Life Preserver Assembly.

24-69. The Illustrated Parts Breakdown should be used during maintenance when requisitioning and identifying parts.

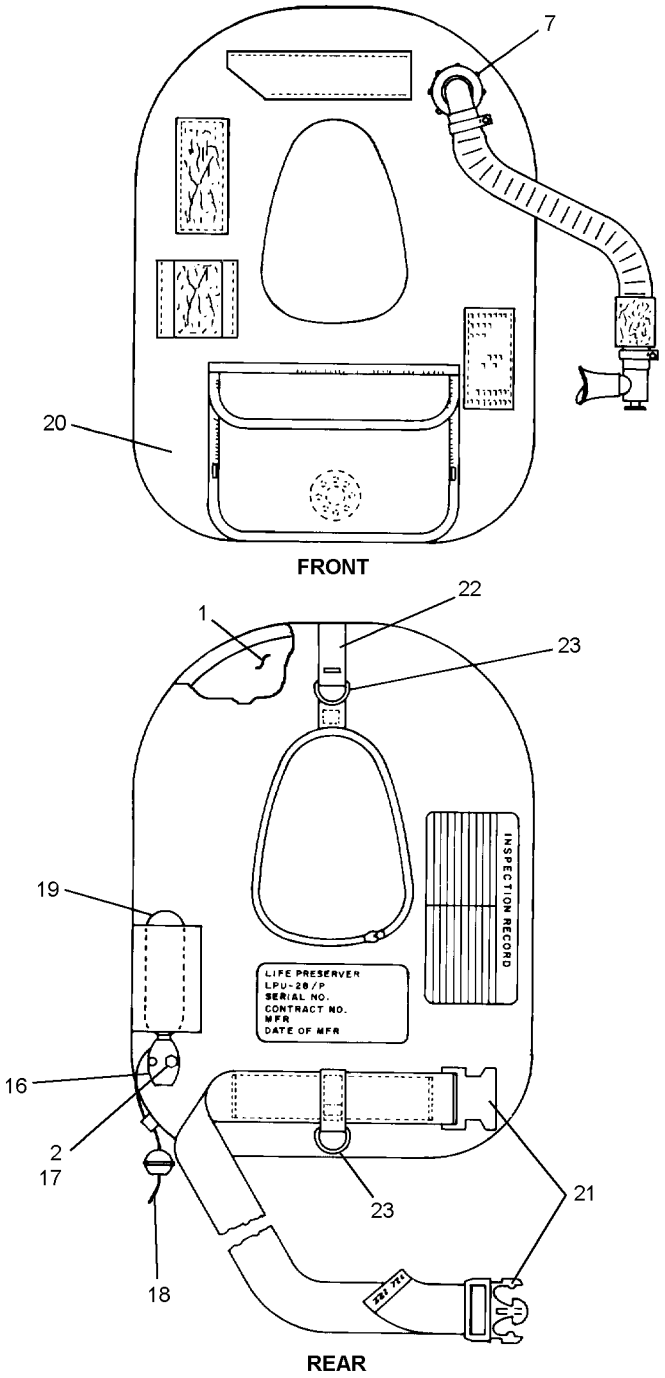

1024A008

Figure 24-8. LPU-28/P Life Preserver Assembly, Illustrated Parts Breakdown (Sheet 1 of 2)

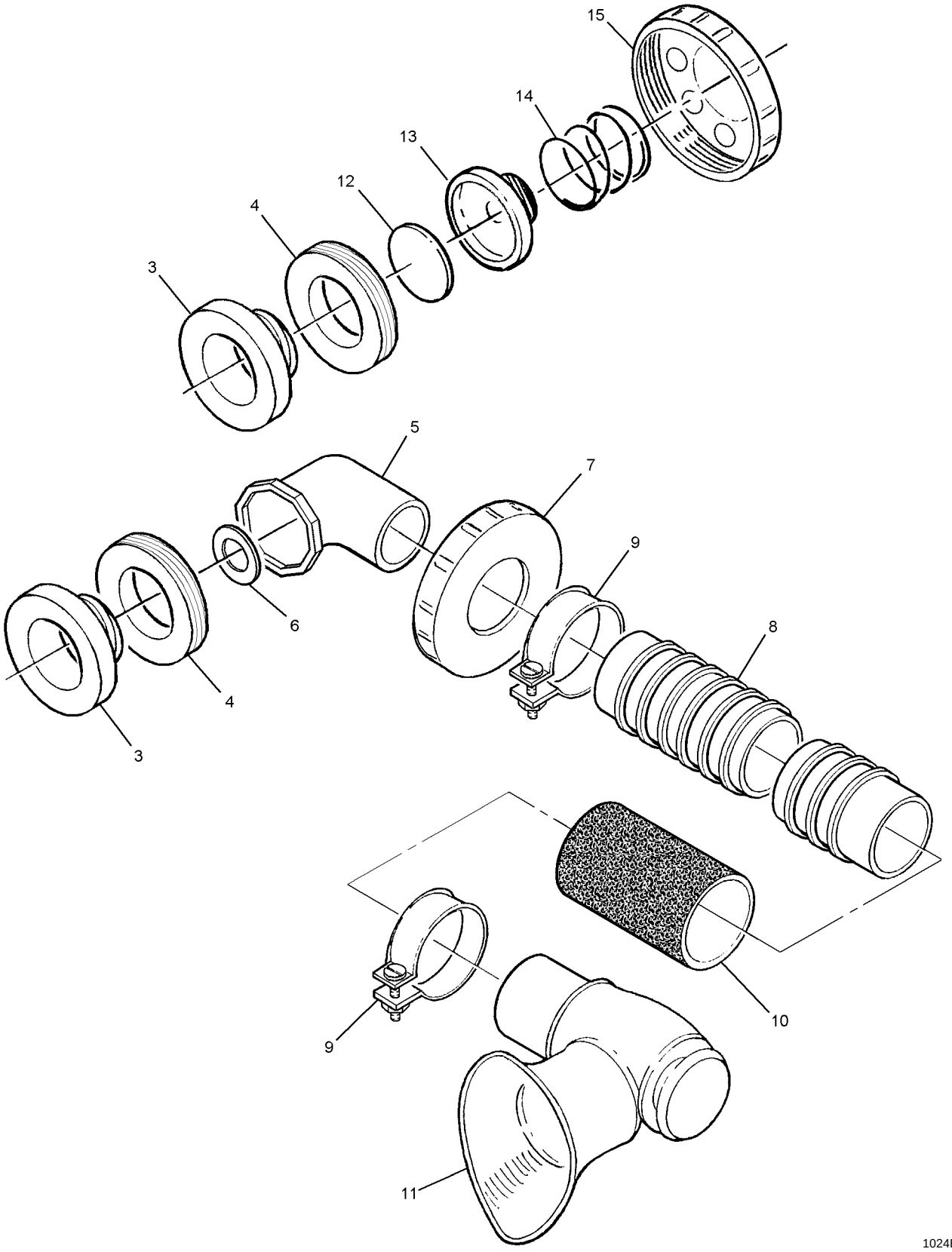

Figure 24-8. LPU-28/P Life Preserver Assembly, Illustrated Parts Breakdown (Sheet 2 of 2)

Figure and Index Number	Part Number	Description 1 2 3 4 5 6 7	Units Per Assembly	Usable On Code
24-8	NIIN 01-199-4974	LPU-28/P INFLATABLE LIFE PRESERVER . . . . . . (1577AS101-1, 30003) SF 8580 (58293)	REF	
-1	8581 NIIN 01-225-9757	. BLADDER ASSEMBLY (58293)	1	
-2	NIIN 01-081-0322	. CHECK VALVE, 67A319D18-1 (30003)	1	
-3	3001 NIIN 01-145-6713	. THREADED ACCESS FITTING, Internal . . . . . . (58293)	2	
-4	3000 NIIN 01-097-8652	. THREADED ACCESS FITTING, External . . . . . (58293)	2	
-5	3022 NIIN 01-098-1780	. ORAL INFLATION ELBOW (58293)	1	
-6	3021 NIIN 01-097-9967	. ELBOW GASKET (58293)	1	
-7	3023 NIIN 01-219-2585	. RING, Retaining (58293)	1	
-8	1202	. ORAL INFLATION HOSE (58293)	1	
-9	1251 NIIN 01-222-7822	. HOSE CLAMP (58293)	2	
-10	1219	. ORAL INFLATION HOSE SLEEVE . . . . . . (Pile Tape) (58293)	1	
-11	3010 NIIN 01-224-4270	. ORAL INFLATION VALVE (58293)	1	
-12	3100 NIIN 01-098-7457	. PRESSURE SEAL GASKET (58293)	1	
-13	3043 NIIN 01-097-8416	. PRESSURE PLATE (58293)	1	
-14	1213 NIIN 01-219-2409	. PRESSURE RELIEF VALVE SPRING (58293) . .	1	
-15	3041 NIIN 01-219-2152	. PRESSURE RELIEF VALVE CAP (58293)	1	
-16	3063 NIIN 01-218-6737	. INFLATION ASSEMBLY (Note 1) (58293)	1	
-17	3037 NIIN 01-218-1055	. INFLATOR STEM CAP NUT (58293)	1	
-18	3031 NIIN 01-218-1143	. ACTUATION KNOB (58293)	1	
-19	NIIN 00-543-6693	. CO_2 CYLINDER, Type II, 28-31 Grams MIL-C-25369 (81349)	1	
-20	TBP	. CASING ASSEMBLY	1	
-21	1224 NIIN 01-097-8651	. BUCKLE, Waist Strap (58293)	1	
-22	8582	. BACK STRAP (58293)	1	
-23	1225	. D-RING (50293)	2	

Notes: 1. Top and bottom gaskets are obtained from Valve Stem Kit, P/N 105AS100-6, NIIN 00-113-8290, which contains one top and one bottom gasket. Seat seal is ordered seperately using P/N 849AML NIIN 01-291-3593.

NUMERICAL INDEX

Part Number	Figure and Index Number	SM&R Code
NIIN 00-543-6693	24-8-19	PAOZZ
NIIN 01-081-0322	24-8-2	PAOZZ
NIIN 01-199-4974	24-8	PAOGG
TBP	24-8-20	PAOZZ
1202 (58293)	24-8-8	PAOZZ
1213 (58293)	24-8-14	PAOZZ
1219 (58293)	24-8-10	PAOGG
1224 (58293)	24-8-21	PAOZZ
1225 (58293)	24-8-23	
1251 (58293)	24-8-9	PAOZZ
3000 (58293)	24-8-4	PAOZZ
3001 (58293)	24-8-3	PAOZZ

Part Number	Figure and Index Number	SM&R Code
3010 (58293)	24-8-11	PAOZZ
3021 (58293)	24-8-6	PAOZZ
3022 (58293)	24-8-5	PAOZZ
3023 (58293)	24-8-7	PAOZZ
3031 (58293)	24-8-18	PAOZZ
3037 (58293)	24-8-17	PAOZZ
3041 (58293)	24-8-15	PAOZZ
3043 (58293)	24-8-13	PAOZZ
3063 (58293)	24-8-16	PAOZZ
3100 (58293)	24-8-12	PAOZZ
8581 (58293)	24-8-1	PAOGG
8582 (58293)	24-8-22	PAOGG

THIS PAGE INTENTIONALLY LEFT BLANK.

CHAPTER 25

LPU-32/P LIFE PRESERVER ASSEMBLY

Section 25-1. Description

25-1. GENERAL.

WARNING

The LPU-32/P life preserver is not suitable for use by small children in Naval aircraft.

25-2. The LPU-32/P life preserver assembly is authorized for use by passengers and troops in helicopter or transport type aircraft for sea survival situations. It is designed such that one size fits all.

25-3. CONFIGURATION.

25-4. The LPU-32/P Life Preserver Assembly consists of a Life Preserver Yoke Assembly in addition to the survival items: a sea-dye marker, a whistle, and a chemlite; each of which must be ordered separately to make up the complete system. The LPU-32/P Life Preserver Assembly weighs approximately 4 pounds and provides a minimum of 40 pounds of buoyancy. It consists of flotation assembly, two inflators, and a casing cover assembly, which includes the belt assembly and the survival items pouch. Donning or doffing does not require the removal of personal effects such as helmets, eyeglasses, etc. See Figures 25-1 and 25-2.

25-5. The dual-cell, yoke-type flotation assembly is constructed of a heat-sealed polyurethane-coated nylon cloth. A fire-retardant, aramid cloth (MIL-C-83429, TYP II, Sage Green # 1590) casing protects the bladder. It is equipped with an oral inflation tube, a check valve, and a manifold stem assembly.

25-6. The waist belt assembly consists of an adjustable belt made of nylon webbing, a nylon slide (loop-loc), a triglide, and side release. A 12-inch locally manufactured extension belt is authorized for use with winter garments, battle dressed troops or larger passengers. See paragraph 25-65A for extension belt assembly instructions.

25-7. The LPU-32/P Life Preserver inflation assembly consists of two Type III (MIL-C-601G) 16 gram CO_2 cylinders and inflators. Each inflator is connected and secured to the valve stem on the flotation assembly with a cap nut; gaskets prevent leaking between valve stem, inflator, CO_2 cylinder and cap nut. The manifold stem is equipped with a check valve to prevent leakage.

25-8. The survival items pouch consists of fire-retardant aramid cloth (MIL-C-83429) same as the casing, two pull slide-fasteners and two grommets for the securing of survival items. The survival items include a sea-dye marker, a whistle, and a chemlight with attached lanyard. See table 25-1 for survival items.

25-9. APPLICATION.

25-10. The LPU-32/P is the preferred passenger life preserver, it will replace the LPP-1, -1A and the Pouch Type Life Preserver as assets become available.

25-11. FUNCTION.

25-12. The LPU-32/P is manually inflated by pulling both of the beaded handles down. Emergency use of the survival items shall be as required. In an emergency situation, the oral inflation tube should be used to top-off an inflated preserver, maintain inflation of a leaky preserver or to inflate a preserver when the CO_2 actuated inflator malfunctions or fails. The oral inflation tube is also used to inflate a preserver with air during an inspection test and to deflate a preserver in preparation for packing, or to relieve excess pressure.

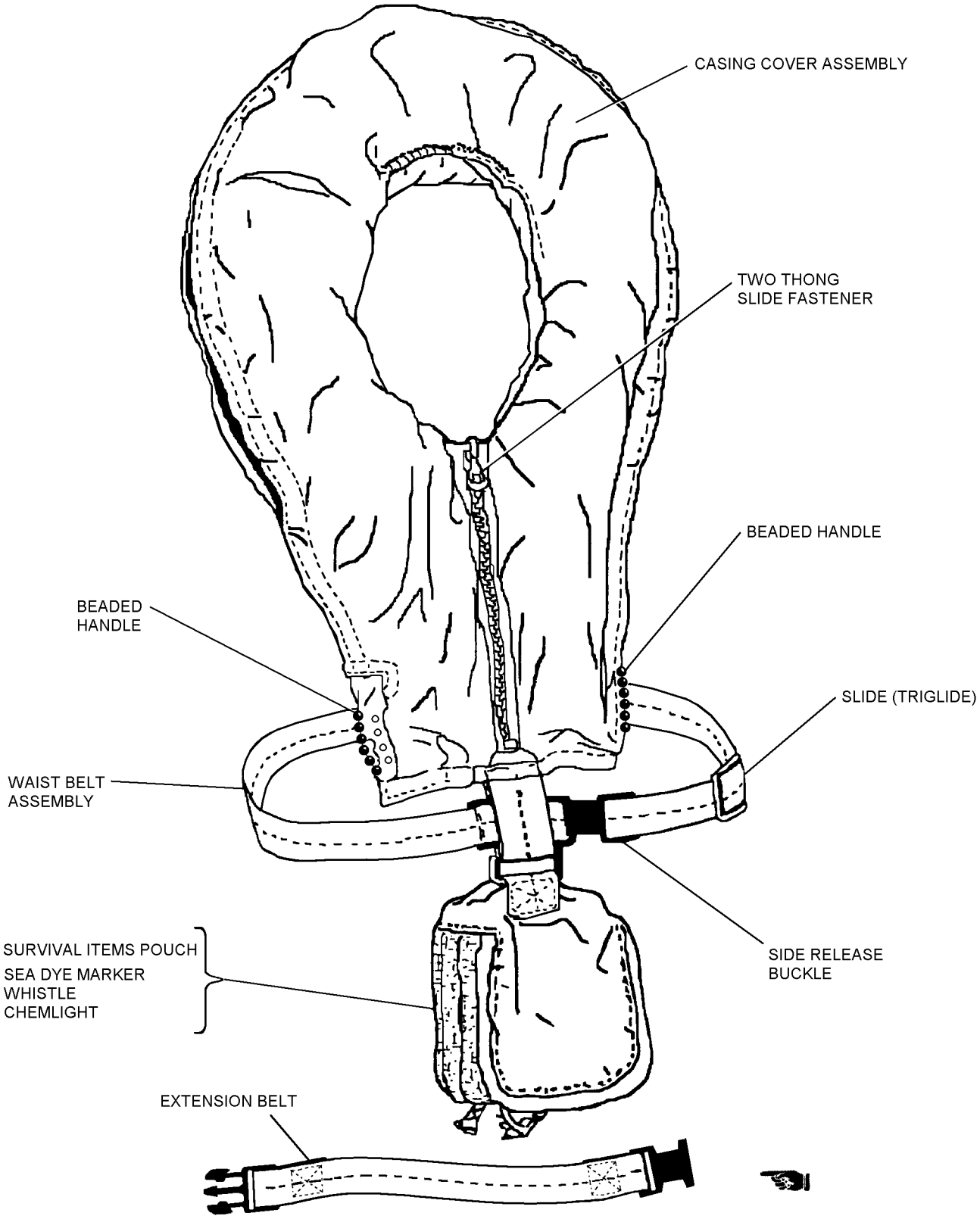

612-1

Figure 25-1. LPU-32/P Life Preserver Assembly, Parts Nomenclature

Table 25-1. LPU-32/P Survival Items

Description	Quantity Required	Reference Number	NIIN	SM&R Code
Whistle, Type II or Fox 40	1	MIL-W-1053 Open Purchase	00-254-8803	PAOZZ
Chemical Light	1	95277-80 (CAGE 83289)	01-334-4274	PAOZZ
Dye Marker	1	MIL-S-17980 (CAGE 81349)	00-270-9986	PAOZZ

Notes: 1. The Passenger Helicopter Aircrew Breathing Device System (PHABD) is authorized for use on the LPU-32/P for Marine troop passengers during flights over water. Refer to NAVAIR 13-1-6.5 for attachment and maintenance procedures.

25-13. DONNING PROCEDURE.

25-14. To don the LPU-32/P life preserver, refer to Figure 25-2 and proceed as follows:

NOTE

Donning does not require removal of helmet or other personal effects. The LPU-32/P is designed to be worn either way, there is no front or back.

1. Unzip LPU-32/P all the way and place over head.

2. Fasten buckle, adjust belt. Passengers in winter garments, battle dressed troops or larger passengers may require the use of a locally manufactured extension belt. See paragraph 25-65A for extension belt assembly instructions.

3. Zip up all the way.

4. Inflate preserver by pulling both beaded handles down or by using oral inflation valves.

NOTE

Either zipper on survival items pouch may be used to remove survival items, as required.

Section 25-2. Modifications

25-15. GENERAL.

25-16. There are no authorized modifications to the LPU-32/P life preserver at this time. Common repair and fabrications to maintain serviceability are listed in table 25-2.

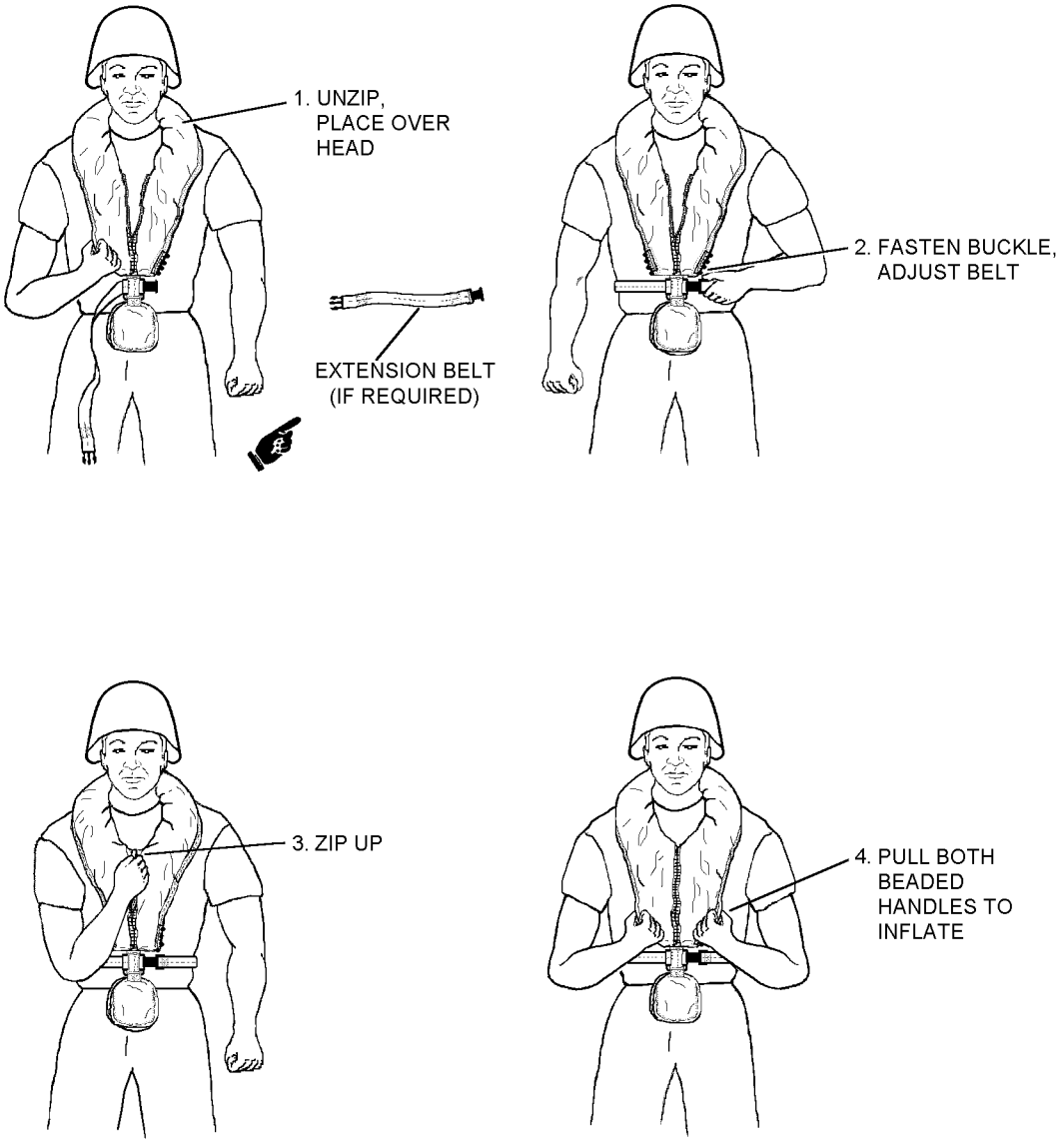

612-2

Figure 25-2. Donning Procedures

Table 25-2. LPU-32/P Common Repairs and Fabrications

Description of Repair or Fabrication	Paragraph Number
Determination of Repairability	25-50
Casing Repair Procedures	25-52
Casing Grommet Replacement	25-53
Cementing Life Preserver	25-54
Patching Life Preserver	25-55
Replacement of Oral Inflation Valve	25-56
Recementing of Bladder Fin Seams	25-57
Fastener Replacement	25-58
Disassembly of Life Preserver	25-59
Reassembly of Life Preserver	25-60
Replacement of Beaded Inflation Handle Assembly	25-61
Repair of Corroded CO_2 Inflation Valve	25-62
Replacement of Top and Bottom Gaskets	25-63
Replacement of Check Valve Assembly	25-64
Fabrication of Protective Cover Assembly	25-65
Fabrication of Extension Belt Assembly	25-65A

Section 25-3. Maintenance

25-17. GENERAL.

25-18. This section contains information on inspection, disassembly, repair/replacement, testing, and reassembly of the LPU-32/P Life Preserver.

25-19. INSPECTION.

25-20. All life preservers shall be subjected to Daily, Special, and 224-Day Special Inspections.

25-21. The Daily Inspection shall be performed on life preservers installed in aircraft prior to each flight by assigned aircrewmembers.

25-22. The Special Inspection shall be performed on all aircraft installed life preservers at intervals not to exceed 28 days. The inspection shall be performed at the organizational level of maintenance by personnel assigned to the Aviator's Equipment Branch.

25-23. Upon completion of the inspection, make necessary entries on appropriate form in accordance with OPNAVINST 4790.2 Series. The 28-Day Special Inspection may be recorded on a separate history card from the history card recording 224-Day Special Inspections, functional checks, and modifications.

25-24. The 224-Day Special Inspection shall be performed on all life preservers prior to placing in service. The Inspection cycle thereafter shall be as follows: personal issue life preservers shall be inspected once every 90 days. Aircraft-installed life preserver inspection shall coincide with the inspection cycle of the aircraft in which installed. See applicable Planned Maintenance System (PMS) publications for specific intervals. In no case shall the interval exceed 231 days. Unless operational requirements demand otherwise, the life preserver 224-Day Special Inspection shall be performed by the intermediate level of maintenance or above. The functional test shall be performed prior to placing in service, every fourth inspection cycle thereafter, and whenever an inflation assembly is replaced. The leakage test shall be performed during every inspection cycle. If inspection indicates damage, complete appropriate forms in accordance with OPNAVINST 4790.2 Series and forward entire assembly to supply. Refer to paragraph 25-50 for determination of repairability.

25-25. QUALITY ASSURANCE. Properly detailed procedures present a logical sequence for the inspection process. The more critical procedures are underlined to designate steps which require a Quality Assurance inspection to assure performance of specific requirements. After the underlined step is performed by the Aircrew Survival Equipmentman, the procedure shall be verified before the next step is performed. This verification shall be performed by a Collateral Duty Inspector or Quality Assurance Representative (CDI, CDQAR, or QAR). Work Center supervisors are primarily responsible for quality assurance within their centers. OPNAVINST 4790.2 Series permits supervisors to nominate their more experienced personnel to serve as quality assurance inspectors. Nominated personnel shall be screened and examined by the Quality Assurance Officer prior to their designation as Quality Assurance Inspectors or Quality Assurance Representatives by the Commanding Officer. Under no circumstances shall an Aircrew Survival Equipmentman perform his own quality assurance inspection.

25-26. DAILY/28-DAY SPECIAL INSPECTION. To perform a Daily/28-Day Special Inspection, proceed as follows:

WARNING

Ensure that the beaded inflation handles are readily accessible. The beaded inflation handles shall be secured with four snap fasteners to the life preserver end flap.

CAUTION

Do not open any sealed or safety-wired/safety tied portions of preserver for Daily/28-Day Special Inspection.

1. Inspect exposed metal parts for corrosion and damage.

2. Inspect seams and harness for wear, snags, tears and abrasions.

3. Inspect for presence of survival items, security of attachment and, if applicable, operation.

4. Inspect casing fabric for cuts, tears, abrasions, security of stitching, and other damage.

5. Inspect hook and pile tape for secure attachment and stitches.

6. Inspect safety ties on beaded inflation handles. The beaded inflation handle safety ties may be replaced without removing the life preserver from service.

7. Inspect buckles, triglides, and snap fasteners for presence, security of attachment, corrosion, and ease of operation.

8. Adjust and don preserver to ensure proper fit.

9. If any discrepancy is noted, the preserver shall be removed from service and repaired in accordance with paragraph 25-47.

25-27. ACCEPTANCE/224-DAY SPECIAL INSPECTION. The Acceptance/224-Day Special Inspection consists of the following tasks:

1. Beaded Inflation Handle Inspection, paragraph 25-28.

2. Casing/Pouch Inspection, paragraph 25-29.

3. Functional Test (every fourth inspection cycle), paragraph 25-30.

4. Visual Inspection, paragraph 25-32.

5. Life Preserver Configuration, paragraph 25-33.

6. General Inspection, paragraph 25-34.

7. Markings Inspection, paragraph 25-35.

8. Survival Items Inspection, paragraph 25-36.

9. Inflation Assembly Inspection, paragraph 25-37.

10. Beaded Inflation Handle Pull Test, paragraph 25-38.

11. Leakage Test, paragraph 25-39.

12. Records Updating, paragraph 25-42.

13. Packing, paragraph 25-66.

25-28. BEADED INFLATION HANDLE INSPECTION. Inspect beaded inflation handle for the following:

1. Attachment of inflation lanyard to beaded handle.

2. Corrosion on snap fasteners and ease of operation.

3. Cuts, tears, deterioration, abrasion, stains, and general cleanliness of lanyard.

4. Presence of safety tie on beaded inflation handle.

25-29. CASING AND POUCH INSPECTION. To inspect casing and/or pouches, proceed as follows:

1. Inspect fabric for cuts, tears, deterioration, abrasion, stains, and general cleanliness.

2. Inspect seams for proper adhesion or stitching.

3. Inspect straps and loops for security and wear.

4. Inspect any other parts for wear, damage, and security.

5. All hardware for security of attachment, corrosion, damage, wear and, if applicable, ease of operation.

6. If any discrepancies are found, the case, container, or pouch shall be repaired or removed from service as deemed appropriate by the inspection activity.

25-30. FUNCTIONAL TEST. To perform a functional test, proceed as follows:

CAUTION

Ensure area surrounding preserver is free of foreign objects.

1. Completely open preserver casing prior to conducting functional test. Preserver shall be completely unfolded and laid out flat.

2. Actuate both inflation assemblies.

3. The preserver shall fully inflate to design shape, without evidence of restriction, in less than 30 seconds.

4. If preserver does not properly inflate, determine cause. Ensure stems and valves are clean and free of foreign matter.

5. If correction is made, the preserver shall be functionally tested again.

6. Deflate preserver in accordance with paragraph 25-31 to remove all CO_2.

25-31. DEFLATION. To deflate a life preserver, proceed as follows:

Support Equipment Required

Quantity	Description	Reference Number
1	Pump, Rotary Vacuum (or equivalent)	NIIN 00-052-5015 (90567)
As Required	Hose, 3/8 or 1/2 inch Inside Diameter, Rubber	—

1. Attach one end of rubber hose to vacuum pump.

2. Deflate through oral inflation valve. Hold vacuum pump hose against end of oral inflation valve. When compartment is collapsed, release oral inflation valve.

25-32. VISUAL INSPECTION. Prior to visually inspecting a life preserver assembly, the life preserver shall be inflated with air to 1.0 psig.

CAUTION

Remove all carbon dioxide cylinders prior to inflating life preserver with air.

NOTE

If suitable air source is not available, water-pumped nitrogen (BB-N-411) may be substituted.

25-33. LIFE PRESERVER CONFIGURATION. The life preserver shall be updated by comparing it to the illustrations in figure 25-1 and Section 25-4, Illustrated Parts Breakdown.

25-34. GENERAL INSPECTION. Examine life preservers for the following:

1. Preserver fabric for cuts, tears, punctures, deterioration and abrasion. Refer to paragraph 25-52 for repair instructions.

2. Seams for proper adhesion. Refer to paragraph 25-57 for repair instructions.

3. Valve inlet stems for security.

4. Oral inflation valve(s) for cracks, security, ease of operation, and corrosion.

5. Patches for proper adhesion and wear. Refer to paragraph 25-55 for repair instructions.

6. Any other parts for wear or other damage.

7. All hardware for security of attachment, corrosion, damage, wear and, if applicable, ease of operation.

8. Preservers for stains, dirt, and general cleanliness. Refer to paragraph 25-43 for cleaning instructions.

9. Cross threading and/or loose manifold nuts.

25-35. MARKINGS INSPECTION. To inspect and restore marking, proceed as follows:

Materials Required

Quantity	Description	Reference Number
As Required	Ink, Marking, Laundry, Black	SPE-92 NIIN 00-161-4229
	-or-	
As Required	Ink, Drawing, Waterproof, Yellow	A-A-59291 NIIN 00-634-6583

1. Compare markings on preserver to those listed in table 25-3.

2. Restore any faded markings.

3. Correct any markings which do not agree with the applicable table. Paint out old marking and enter new marking as close to proper position as possible.

25-36. SURVIVAL ITEMS INSPECTION. To inspect survival items, proceed as follows:

1. Inventory all items by checking items against table 25-1. Replace any missing or unsatisfactory item.

Table 25-3. LPU-32/P Life Preserver Markings

Marking (Note 1)	Location	Letter Height
FLOTATION ASSY (LPU-32/P) 30003/3335AS104 MFR'S IDENT. [applicable number] CONTR. NO. [applicable number] SERIAL NO. [applicable number] DATE OF MFR [month and year]	Lower right side of flotation assembly	5/16 inch 3/16 inch
Notes: 1. Replacement markings shall be stamped or stenciled using waterproof black ink.		

NOTE

NAVAIR 13-1-6.5, Rescue and Survival Equipment contains detailed information on the inspection of survival items.

2. Inspect all items for damage, spent contents and expired service life. Replace as necessary.

3. Operate all items which are not intended for one-time use. Replace as necessary.

25-37. INFLATION ASSEMBLY INSPECTION. To inspect life preserver inflation assemblies, proceed as follows:

1. Remove CO_2 cylinders from inflation assemblies.

2. Examine inflation device, actuating lever and lanyard, and beaded inflation handles for fraying, corrosion, stripped threads, and other damage.

3. If required, remove any sharp edges from valve with a fine round file.

4. Operate actuating lever several times. Ensure that lever moves freely and ensure that piercing pin moves properly inside valve body. Inspect point of piercing pin for serviceability. If point is flat, rounded, dull, or otherwise worn or damaged, replace inflation assembly.

NOTE

Each time inflation assembly gaskets or inflation assembly is removed and replaced for any reason, a functional test shall be conducted. Refer to paragraph 25-30. Use new gaskets when replacing device.

5. If any discrepancy is noted in device that is not repairable in accordance with paragraph 25-50, remove assembly and install a new inflation device.

25-38. BEADED INFLATION HANDLE PULL TEST. To perform the beaded inflation handle pull test, proceed as follows:

Support Equipment Required

Quantity	Description	Reference Number
1	Gage, Dial, Push/Pull, 0 to 50 lb	DPPH50 or equivalent

1. Ensure that CO_2 cylinders have been removed. Actuate the inflator assembly. All snap fasteners on beaded inflation handle must be fully engaged.

2. Attach gage to webbing between third and fourth bead on inflation handle.

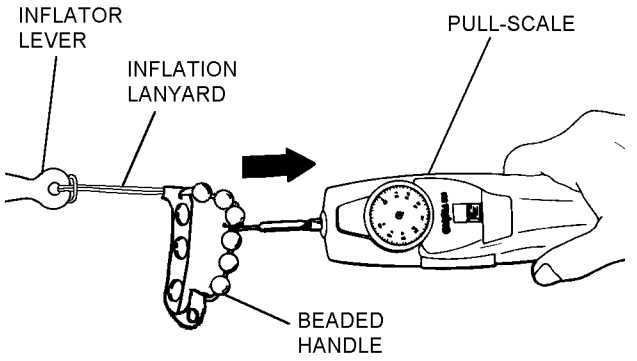

612-3

Step 2 - Para 25-38

3. Hold inflator steady. Slowly exert a 25 pound straight pull on webbing. All snap fasteners should release at or before 25 pounds.

4. If all snap fasteners do not release at or before the 25 pound limit, replace the entire beaded inflation handle. Repeat steps 1 thru 4.

5. If the snap fasteners release properly, examine the lanyard for frays, ruptures, thin spots, split casing, and security of stitches and knots. If unsatisfactory, replace the entire beaded inflation handle. Refer to paragraph 25-61.

25-39. LEAKAGE TEST. All life preservers shall be subjected to a leakage test each 224-Day Special Inspection. To perform a leakage test proceed in accordance with paragraph 25-41.

25-40. Test Fixture. The test fixture, consisting of a three way valve, pressure gauge, and adapters for compartments being tested, shown in Chapter 3, will not work on the oral inflation valves used on the LPU-32/P.

Figure 25-3. Deleted

25-41. Test Procedure. To test life preservers, proceed as follows:

Support Equipment Required

Quantity	Description	Reference Number
1	Gage, Pressure, Dial Indicating 0-5 psi	(CAGE 61349) NIIN 00-087-3143
	-or-	
1	Gage, Pressure, Dial Indicating 0-15 psi	(CAGE 70462) NIIN 00-942-8127

Materials Required

Quantity	Description	Reference Number
As Required	Chalk Marking	NIIN 00-164-8893 White or NIIN 00-223-6707 Yellow

CAUTION

Ensure test area is free of foreign objects.

1. Ensure all carbon dioxide has been removed from any preserver which has been functionally tested.

CAUTION

Damage may occur to oral inflation valve if air supply pressure entering the life preserver exceeds ten (10) psi during this test.

NOTE

If a suitable air source is not available, water-pumped nitrogen (BB-N-411) may be substituted.

Due to construction of the LPU-32/P, each bladder must be leak checked separately.

2. Lay vest on flat surface with bladders exposed. Using chalk mark the top center of the exposed bladder side A. Turn vest to opposite side and mark in same location side B. Inflate bladder side a through oral inflation tube to a test pressure of 2.0 psig. Use pressure gage to verify correct pressure.

3. After a minimum of 15 minutes the pressure shall be checked and readjusted, if necessary, to the test pressure of 2.0 psig. Record current time.

4. Disconnect air supply and check for leaks. Ensure all valves are closed.

5. Record temperature and barometric pressure.

6. After a minimum of four hours from the time recorded in step 3, measure pressure in chamber being tested using pressure gage and record. Acceptable pressure shall not be less than 1.6 psig after applying adjustments in step 7.

7. Record temperature and barometric pressure and correct test pressure for any changes in temperature and barometric pressure. Refer to tables 25-4 and 25-5.

EXAMPLE

UNCORRECTED TEST READING 1.70 PSI

	TEMP.	BARO.
START	75° F	29.90 IN. Hg
END	70° F	29.70 IN. Hg
DIFFERENCE	- 5° F	-0.20
CORRECTION	+0.155	-0.098

TEMP. CORRECTION	+ 0.155
+ BARO. CORRECTION	- 0.098
CORRECTION	+ 0.057

UNCORRECTED READING	1.700 PSI
+ CORRECTION	+ 0.057
CORRECTED READING	1.757 PSI

612-5

Step 7 - Para 25-41

Table 25-4. Temperature Conversion Chart

Temperature Difference (F°)	Correction (psi)
1	0.031
2	0.062
3	0.093
4	0.124
5	0.155
6	0.186
7	0.217
8	0.248
9	0.279
10	0.310
Rise in temperature: subtract from gage reading. Fall in temperature: add to gage reading.	

8. If pressure of chamber is below 1.6 psig inflate to leakage test pressure and coat with a soap solution to locate leaks. Mark leak areas. Rinse preserver with fresh water, air dry and repair in accordance with paragraph 25-55.

9. Deflate preserver in accordance with paragraph 25-31.

9A. Repeat steps 2 thru 9 for bladder B.

10. Ensure that inflation valve lever is cocked. Install CO_2 cylinder in accordance with paragraph 25-46.

25-42. RECORDS UPDATING. Make necessary entries on appropriate form in accordance with OPNAVINST 4790.2 Series.

25-43. CLEANING AND SERVICING.

25-44. Cleaning and servicing consist of cleaning the bladder case, and/or pouch, and installation of CO_2 cylinders.

25-45. CLEANING OF LIFE PRESERVER CASINGS/BLADDERS. To clean life preservers, machine washing is preferred on casings and pouches. Alternate method is by hand. Remove any survival items and other detachable items and proceed as follows:

Materials Required

Quantity	Description	Reference Number
As Required	Detergent, General Purpose	MIL-D-16791 NIIN 00-282-9699
As Required	Cloth, Lint-Free, Type II	MIL-C-85043 NIIN 00-044-9281
As Required	Talc, Technical	MIL-T-50036A NIIN 01-080-9589

CAUTION

Solvents are not to be used in cleaning life preservers.

1. Prepare solution of detergent (MIL-D-16791) consisting of 1/4 to 1/2 ounce of detergent per gallon of water.

2. Apply cleaning solution to soiled area with a spray or sponge.

Table 25-5. Barometric Pressure Conversion Chart

Press. Diff. (inHG)	Corr. (psi)	Press. Diff. (inHG)	Corr. (psi)	Press. Diff. (inHG)	Corr. (psi)	Press. Diff. (inHG)	Corr. (psi)	Press. Diff. (inHG)	Corr. (psi)
0.01	0.005	0.16	0.078	0.31	0.152	0.46	0.225	0.61	0.299
0.02	0.010	0.17	0.083	0.32	0.157	0.47	0.230	0.62	0.304
0.03	0.015	0.18	0.088	0.33	0.162	0.48	0.235	0.63	0.309
0.04	0.020	0.19	0.093	0.34	0.167	0.49	0.240	0.64	0.314
0.05	0.025	0.20	0.098	0.35	0.172	0.50	0.245	0.65	0.319
0.06	0.030	0.21	0.103	0.36	0.176	0.51	0.250	0.66	0.323
0.07	0.035	0.22	0.108	0.37	0.181	0.52	0.254	0.67	0.328
0.08	0.040	0.23	0.113	0.38	0.186	0.53	0.260	0.68	0.333
0.09	0.045	0.24	0.118	0.39	0.191	0.54	0.265	0.69	0.338
0.10	0.049	0.25	0.123	0.40	0.196	0.55	0.270	0.70	0.343
0.11	0.054	0.26	0.127	0.41	0.201	0.56	0.275	0.71	0.348
0.12	0.060	0.27	0.132	0.42	0.206	0.57	0.279	0.72	0.353
0.13	0.064	0.28	0.137	0.43	0.211	0.58	0.284	0.73	0.358
0.14	0.069	0.29	0.142	0.44	0.216	0.59	0.289	0.74	0.363
0.15	0.073	0.30	0.147	0.45	0.221	0.60	0.294	0.75	0.368

Rise in pressure: add to gage reading.
Fall in pressure: subtract from gage reading.

3. Allow solution to remain on surface for several minutes, then agitate with a soft brush or rag.

4. Rinse surface thoroughly with water; wipe with a cloth or sponge. Repeat this application until surface is free from all solution.

5. Dry casing before use and dry bladder with a lint-free cloth (MIL-C-85043). Apply a light coating of talc (MIL-T-50036A).

25-46. INSTALLATION OF CO_2 CYLINDERS. To install CO_2 cylinders, proceed as follows:

Support Equipment Required

Quantity	Description	Reference Number
1	Scale (Gram)	A-A-52021-1 NIIN 00-514-4117 or equivalent
1	Die, Cylinder Thread Chaser	3/8 inch, Size 24

Materials Required

Quantity	Description	Reference Number
1	Seat Seal	849AM NIIN 01-290-8171

NOTE

Weight of charged cylinder will vary according to manufacturer.

1. Weigh a charged cylinder and compare the minimum stamped weight with the scale weight. Discard and replace cylinder if scale weight is 2 grams less than minimum stamped weight.

2. The LPU-32/P Life Preserver assembly uses two 840AM Inflators, and two MIL-C-601G, Type III 16 gram CO_2 cylinders

3. Ensure that inflator lever is in a cocked position.

4. To assure a firm cylinder seat, conduct a cylinder thread count. Threaded portion of cylinder neck shall contain a minimum of seven full threads to assure a firm cylinder seat within valve body. Any cylinder found with less than seven full threads shall be discarded. See figure 25-4.

CAUTION

Steel threads on CO_2 cylinder can cause damage to aluminum threads on inflator if cylinder is not carefully threaded.

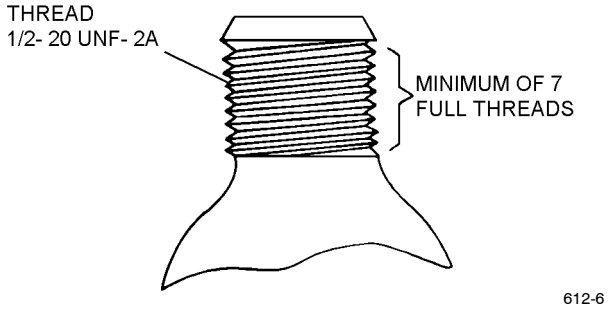

Figure 25-4. Cylinder Thread Count

5. If binding occurs during installation of cylinder, use thread chaser die on cylinder thread to cut free excessive plating. Reinstall cylinder. If binding still occurs, replace cylinder.

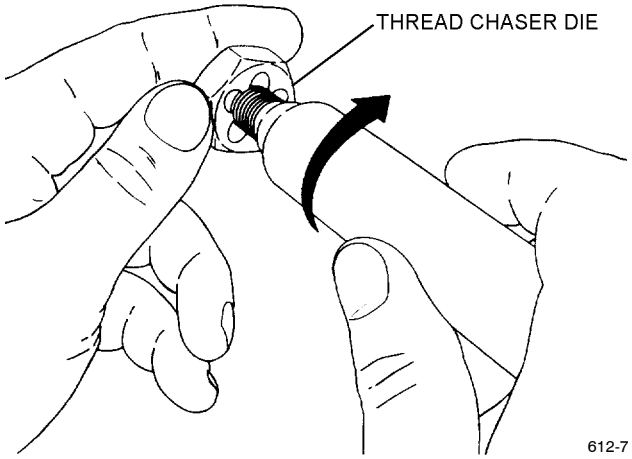

Step 5 - Para 25-46

6. After performing functional test, insert a new seat seal gasket. At intermediate inspection intervals, inspect condition of gasket and replace if necessary.

7. Install CO_2 cylinder into inflator body as far as hand twisting will permit.

8. Close inflation valve protective covers if installed. Secure with hook and pile tape provided.

25-47. REPAIR/REPLACEMENT.

25-48. This section contains instructions for the repair or fabrication of various components or subassemblies of life preservers to ensure that appropriate items of equipment remain in Ready For Issue (RFI) status. Reference numbers for parts which are defective, corroded or worn and require replacement are included in the applicable section. Other replacement parts, such as carrying cases and personal survival equipment, are listed in the applicable table.

25-49. Replacement of easily removed assembly components such as CO_2 inflation valves and survival items are authorized in addition to repair and replacement procedures documented in this section. The life preserver shall be subjected to a functional and leakage test each time CO_2 inflation valves are removed and replaced for any reason, and each time inflation valve gaskets are replaced.

25-50. DETERMINATION OF REPAIRABILITY. Patching of holes, cuts, tears or punctures 1 inch square or less are the only repairs authorized in a life preserver bladder.

25-51. Life preserver shall be considered beyond repair for any of the following reasons:

1. Porous fabric areas on flotation bladder.

2. Split or open bladder seams with the exception of non-leaking bladder fin seams.

3. Leakage test failure resulting from other than repairable cut, tear or puncture.

4. Holes, cuts, tears or punctures within 1 inch of flotation bladder seams.

5. Deterioration of the coated fabric caused by oil, grease, or any other foreign substance.

6. Deterioration of the coated fabric caused by a heavy mildewed condition.

25-52. CASING REPAIR PROCEDURES. To repair casings, proceed as follows:

Materials Required

Quantity	Description	Reference Number
As Required	Thread, Nylon, High Temperature Resistant, Sage Green	MIL-T-83193 NIIN 00-405-2252
	-or-	
As Required	Thread, Nylon, Type II, Size E, Sage Green	V-T-295 NIIN 00-204-3884
As Required	Cloth, Aramid, Non-melting, Type 456, Class I, Sage Green	MIL-C-83429 NIIN 01-147-2064
As Required	Tape, Hook, Type II, Sage Green	MIL-F-21840 NIIN 00-405-2266
As Required	Tape, Pile, Type II, Sage Green	MIL-F-21840 NIIN 00-405-2263

1. Minor holes, rips, tears, or abrasions in casing assembly may be repaired if they do not exceed 2 inches.

2. Repair or replace loose or damaged hook and pile tape as required.

3. Remove bladder in areas being repaired.

4. For all repairs plus loose or broken stitching use 6 to 8 stitches per inch and back stitch one half inch.

5. Casing assembly worn beyond economical repair shall be discarded.

25-53. CASING GROMMET REPLACEMENT. To replace casing grommet, proceed as follows:

Support Equipment Required

Quantity	Description	Reference Number
1	Punch, Cutting, 3/16	3GGG-P-833 NIIN 00-180-0941
1	Pencil, Solder	W-S-570 NIIN 00-204-3855
As Required	Tape, Nylon, Sage Green, 1 inch	MIL-T-5038 NIIN 00-753-6144
2	Grommet, Brass, Size 00	MS20210-GB-20 NIIN 00-291-0302

1. Separate bladder and casing in areas being repaired.

2. Remove loose grommet.

3. Reinforce worn grommet hole in casing by using nylon tape.

a. Prepare reinforcing material.

(1) Cut and sear edges of a 1 inch length of nylon tape.

b. Sew reinforcing material over grommet location, centered where possible. Use a cross box stitch with 6 to 8 stitches per inch, 1/6 inch from edge.

4. Install new grommet.

a. Locate original grommet hole. Cut hole in reinforcing material using 3/16 cutting punch.

b. For nylon tape, carefully sear hole to prevent fraying using solder pencil.

c. Install grommet using 00 grommet setter and base.

25-54. CEMENTING LIFE PRESERVERS. Cementing of life preservers shall be performed as follows:

Support Equipment Required

Quantity	Description	Reference Number
1	Roller, Wooden	GGG-R-00620 NIIN 00-243-9401
1	Brush, Disposable	NIIN 00-514-2417

Materials Required

Quantity	Description	Reference Number
As Required	Toluene	TT-T-548 NIIN 00-281-2002
	-or-	
As Required	Methyl Ethyl Ketone (MEK)	TT-M-261 NIIN 00-281-2762
As Required	Adhesive, Polyurethane (Note 1)	MIL-A-47315 P/N UR-1092 NIIN 01-375-7855
As Required	Talc, Technical	MIL-T-50036A NIIN 01-089-9589

Notes: 1. Polyurethane adhesive (UR-1092) may be open purchased from the following source (minimum order $150.00):
Clifton Adhesives Inc.
Burgess Place
Wayne, NJ 07473
201-694-0845

WARNING

Do not use toluene or MEK near open flame, heat or electrical sparks. Avoid prolonged contact with skin or breathing of fumes. Use only in a well ventilated area.

CAUTION

Use only polyurethane adhesives on heat sealed polyurethane-coated cloth of LPU-32/P life preserver assemblies.

NOTE

Toluene shall be the primary solvent used in the fabrication or repair of this assembly. MEK may be used if Toluene is not available. Always use solvents sparingly and wipe up excess solvents; do not allow to dry by evaporation.

Toluene or MEK must be applied vigorously to life preserver material over three years old in order to reactivate the material prior to cementing. Pigment from the material coloring staining a cloth rubbed over the treated surface will indicate the material has been reactivated. Cement shall be applied immediately after the surface has dried.

1. Clean both surfaces to be cemented with four applications of toluene or MEK. Apply toluene or MEK with back-and-forth strokes on the first and third applications, and one-way strokes on the second and fourth applications. Allow area to dry between applications.

CAUTION

The effective active period of adhesive mixtures composed of polyurethane and an accelerator is eight (8) hours. Do not use mixture if older than eight hours.

2. Prepare only enough mixture for 8 hours. Dispose of any remaining mixture.

3. Using a disposable brush, apply cement to completely cover surfaces to be cemented. Use long, one direction strokes and complete each surface before cement becomes tacky as the brush may pull tacky cement from the surface. Allow to dry for 10 minutes.

4. Apply a second coat of cement as in step 3. Use brush strokes perpendicular to the original direction.

5. When second coat of cement has become tacky, place pieces together. If cemented area has a cut or tear, butt edges of damage before applying patch. Roll out bubbles with a wooden roller.

6. Allow cement to cure a minimum of 48 hours.

7. Dust area with talc (MIL-T-50036A).

25-55. PATCHING LIFE PRESERVERS. Patching of life preservers shall be performed as follows:

NOTE

Life preserver is not repairable if it has holes, cuts, tears, or punctures over one-inch square.

Materials Required

Quantity	Description	Reference Number
As Required	Cloth, Nylon, Polyurethane-coated, Type I	MIL-C-83489 NIIN 01-335-3129

CAUTION

Only Polyurethane adhesives and Polyurethane-coated cloth and patches shall be used on Polyurethane-coated LPU-32/P life preserver assemblies.

NOTE

Select patch color as near as possible to color of life preserver being repaired.

Use of cloth from BCM raft/life preservers is authorized for repair, with two exceptions. Inflatables condemned for contamination (oil, grease, etc.) and ALSS equipment involved in mishaps shall not be used for repairs.

1. Cut a rounded patch 1 inch larger than damage on all sides.

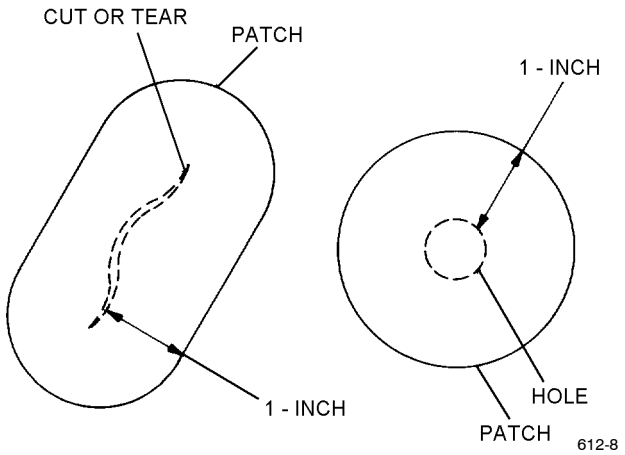

Step 1 - Para 25-55

2. Center patch over damage and trace an outline of patch on fabric.

3. Cement patch to damaged area in accordance with paragraph 25-54.

4. Dust area with talc (MIL-T-50036A).

5. Perform a leakage test.

25-56. REPLACEMENT OF ORAL INFLATION VALVE. There is no authorized repair of the oral inflation valve.

25-57. RECEMENTING OF BLADDER FIN SEAMS. Recementing of seams is as follows:

CAUTION

Recementing of fin seams is not authorized for heat sealed LPU-32/P Life Preservers.

25-58. FASTENER REPLACEMENT. Replace fasteners as follows:

1. To replace hook and pile fastener tapes, proceed as follows:

Materials Required

Quantity	Description	Reference Number
As Required	Fastener Tape, Hook, Type I, Class 1, Sage Green	MIL-F-21840
	1 inch Width	NIIN 00-405-2266
	1 1/2 inch Width	NIIN 00-425-1294
As Required	Fastener Tape, Pile, Class 1, Sage Green	MIL-F-21840
	1 inch Width	NIIN 00-405-2263
	1 1/2-inch Width	NIIN 00-405-2264
As Required	Thread, Nylon, High Temperature Resistant, Sage Green	MIL-T-83193 NIIN 00-405-2252
	-or-	
	Thread, Nylon, Type II, Size E, Sage Green	V-T-295 NIIN 00-204-3884
1	Fastener, Slide, Interlocking, Sage Green	V-F-106, TY III

a. Carefully remove damaged fastener tape by removing attachment stitching.

b. Cut new fastener tape the same length and width as the original fastener tape. Sear ends of tape.

c. Place fastener tape on garment in position of original fastener tape. Stitch to garment using a single row of stitching, 1/8 inch from fastener tape edge on all four sides.

2. To replace slide fasteners, proceed as follows:

a. Remove casing from bladder assembly.

b. If correct length slide fastener is not available, construct a slide fastener the same length as the original slide fastener. Replace the entire slide fastener.

NOTE

All stitching is to be performed with a type 301 stitch, 8-10 stitches per inch. Backstitch 1/2 inch at ends of all stitching.

c. Remove all stitching attaching slide fastener to casing. Do not cut casing or attachment grommet flap material.

NOTE

Observe orientation of both attachment grommet flaps as they are removed. Ensure that both attachment grommet flaps are resewn in the same orientation with the slide fastener.

d. Stitch new slide fastener and attachment grommet flap in place, stitching along previous stitching outline.

e. Finish stitching, replacing all stitches removed.

f. If survival items pouch slide fastener is being replaced, invert pouch to remove stitches and slide fastener from inside. Replace slide fastener with a complete new slide fastener equipped with 2 sliders and pulls.

25-59. DISASSEMBLY OF THE LPU-32/P LIFE PRESERVER. To disassemble the LPU-32/P life preserver, proceed as follows:

Materials Required

Quantity	Description	Reference Number
1	Side cutters or scissors	—

NOTE

Life preserver shall be disassembled only to the extent necessary to perform required maintenance or inspection.

The flotation assembly is attached inside the casing on both the left and right sides of the zipper. Both sides must be detached in order to fully separate the flotation assembly and casing.

1. Lay life preserver flat on a worktable, either side up. Unzip life preserver. Open hook-and-pile

seam on casing and spread flotation assembly flat on worktable. Turn life preserver over as needed to aid in disassembly.

2. Remove CO_2 cylinders from both inflators and retain them for reassembly.

3. Unsnap both beaded inflation handles from casing (inflators and beaded inflation handles are still attached to flotation assembly).

4. Untie or cut tacking thread from knots on nylon cord reeved through attachment grommets.

5. Untie or cut the nylon cord and unlace from attachment grommets.

6. Dispose of nylon cord.

7. Remove flotation assembly from casing.

25-60. REASSEMBLY OF THE LPU-32/P LIFE PRESERVER. To reassemble the LPU-32/P life preserver, proceed as follows:

Materials Required

Quantity	Description	Reference Number
As Required	Cord, Nylon, Type III	MIL-C-5040 NIIN 00-240-2146

NOTE

The flotation assembly is attached inside the casing on both the left and right sides of the zipper. Both sides must be reattached in order to fully reassemble the flotation assembly and casing.

Reattach one side of the preserver in accordance with the following steps, then reattach the other side.

1. Lay life preserver casing flat on worktable, either side up. Unzip life preserver. Open hook-and-pile seam on casing and fold upper side of casing over the zipper to expose the interior.

2. Spread flotation assembly flat on casing. Flotation assembly attachment grommets shall lay flat on casing attachment grommets. Align flotation attachment grommets with casing attachment grommets. Pull casing up through center of flotation assembly as necessary.

3. Measure, cut and sear the ends of a 12-inch length of Type III Nylon Cord. Tie an overhand knot 3/4 inch from one of the ends. Starting at the top hole of the grommets aligned in step 1, pass the end of cord without the knot down through the aligned grommets. Continue reeving cord from top to bottom. When complete, the free end of cord without the knot should be exiting the bottom grommets. Tie an overhand knot as close to the grommets as possible. Repeat step for opposite side grommets.

4. If not previously performed, perform leakage test in accordance with paragraph 25-41.

5. Refer to paragraph 25-66 to repack the LPU-32/P Life Preserver.

25-61. REPLACEMENT OF BEADED INFLATION HANDLE ASSEMBLY. Replace the entire beaded inflation handle assembly as a unit. To replace the beaded inflation handle, proceed as follows:

Materials Required

Quantity	Description	Reference Number
As Required	Handle, Beaded, Inflation	(CAGE 30003) NIIN 01-120-4752
As Required	Thread, Nylon, Size E	V-T-295 NIIN 00-204-3884

1. Cut and remove safety tie securing beaded inflation handle.

Figure 25-5. Deleted

2. Open and unfold life preserver assembly.

3. Remove CO_2 cylinder from CO_2 inflator assembly. Retain CO_2 cylinder for reinstallation.

4. Unsnap beaded inflation handle from life preserver casing: then remove inflation lanyard from inflator lever.

5. Secure new beaded handle inflation lanyard to actuating lever by passing lanyard through hole in end of actuating lever. Pass beaded inflation handle through loop in lanyard to form lark's head knot.

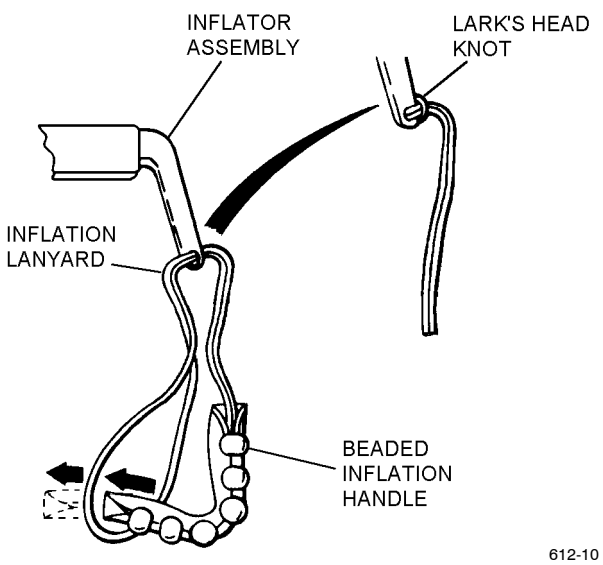

Step 5 - Para 25-61

6. Perform beaded inflation handle pull test. Refer to paragraph 25-38.

7. Fasten beaded inflation handle to casing with snap fasteners provided; then safety-tie beaded inflation handle with one turn of size E nylon thread, single. Draw thread sufficiently to permit 1/2 inch ±1/8 inch space between the middle beads and webbing on the preserver. Tie ends of both safety ties with a surgeon's knot followed by a square knot.

8. Recock CO_2 inflator and install CO_2 cylinder.

9. Pack life preserver according to procedures outlined in paragraph 25-66.

10. Make necessary entries on appropriate form in accordance with OPNAVINST 4790.2 Series.

25-62. REPAIR OF CORRODED CO_2 INFLATION VALVE. To repair CO_2 inflation valve, proceed as follows:

Materials Required

Quantity	Description	Reference Number
As Required	Lubricant, Silicone	DC7 (CAGE 71984) NIIN 00-975-0712
1	Valve Stem Kit (Note 1)	105AS100-6 (CAGE 30003) NIIN 00-113-8290
1	Seat Seal	849AM NIIN 01-290-8171
As Required	Cloth, Emery No. 240	—
1	Inflator	840AM NIIN 01-356-8233
As Required	Abrasive Mat	MIL-A-9962 NIIN 00-967-5093
As Required	Corrosion Preventive Compound (Amiguard) Type I	MIL-C-85054 NIIN 01-041-1596

Notes: 1. Valve Stem Kit, P/N 105AS100-6, NIIN 00-113-8290, contains one top and one bottom gasket.

1. Remove CO_2 cylinder from valve. Remove inflation valve from preserver. Discard two gaskets on valve stem.

2. Remove grooved taper pin (retaining lever) from inflation valve, using awl and mallet. See figure 25-6.

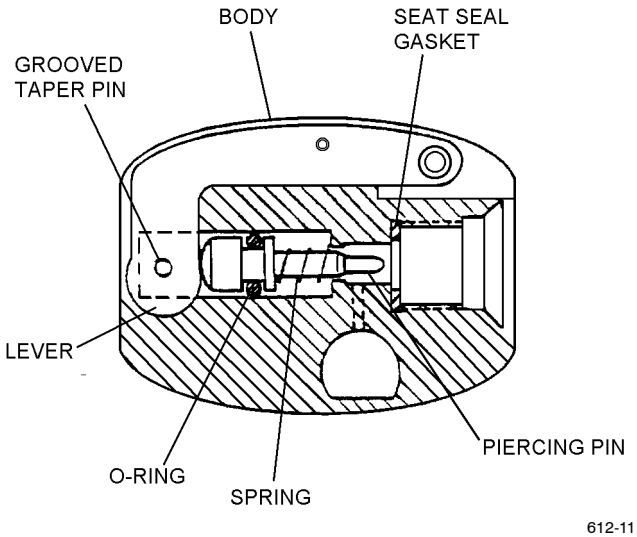

Figure 25-6. Typical CO_2 Inflation Assembly

3. Remove lever, spring, and piercing pin.

4. If spring is broken or corroded, replace entire valve.

5. If piercing pin or actuating lever is corroded, remove corrosion with abrasive mat. If abrasive mat is ineffective, use 240 grit emery cloth. Do not damage O-ring on piercing pin. Wipe off any dirt or moisture from actuating lever and apply a thin coat of MIL-C-85054 and allow to dry.

6. Clean residue from actuating lever on piercing pin. Lightly coat base of piercing pin with silicone lubricant.

7. Reassemble inflation valve and operate actuating lever three or four times. Ensure that lever and piercing pin move freely.

8. If piercing pin and lever do not move freely, obtain replacement valve.

9. Reinstall inflation valve on life preserver using new gaskets. Install new seat seal gasket. Reinstall CO_2 cylinder.

10. Install cap nut onto valve stem and torque to a value of 8 ±1 in-lb.

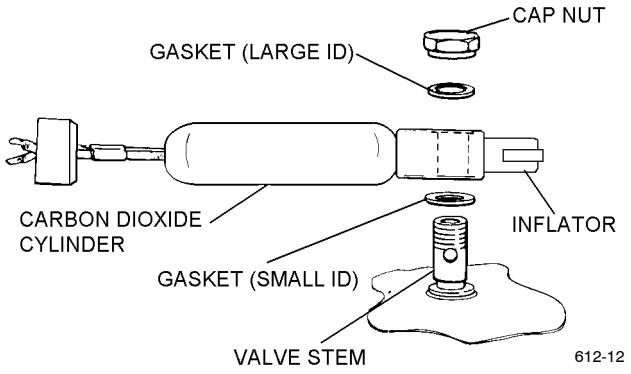

Step 10 - Para 25-62

25-63. REPLACEMENT OF TOP AND BOTTOM GASKETS. To replace the top and bottom gaskets on the inflators, proceed as follows:

Support Equipment Required

Quantity	Description	Reference Number
1	Wrench, 9/16 inch	—

Materials Required

Quantity	Description	Reference Number
1	Valve Stem Kit (Note 1)	105AS100-6 (CAGE 30003) NIIN 00-113-8290

Notes: 1. Valve Stem Kit, P/N 105AS100-6, NIIN 00-113-8290, contains one top and one bottom gasket.

1. Remove cap nut and top gasket from inflator.

2. Remove inflator and replace bottom gasket.

3. Carefully place inflator onto valve stem.

4. Install top gasket onto valve stem.

5. Tighten cap nut onto valve stem and torque to a value of 8 ±1 in-lb.

6. Perform functional and leakage tests on life preserver cell that was repaired. Refer to paragraphs 25-30 and 25-39.

25-64. REPLACEMENT OF CHECK VALVE ASSEMBLY. To replace a defective check valve assembly, proceed as follows:

Support Equipment Required

Quantity	Description	Reference Number
1	Tool, Valve Core	8769A or equivalent (CAGE 27783) NIIN 01-354-5423
1	Wrench, Torque	—

Materials Required

Quantity	Description	Reference Number
1	Valve, Pneumatic Inflator (Check Valve Assembly) (Note 1)	Schrader-Bridgeport P/N 8457500047

Notes: 1. Schrader-Bridgeport P/N 8457500047 must be open purchased from:
Schrader-Bridgeport Intl
205 Frazier Rd
P.O. Box 668
Altivista, VA 24517
Phone (804) 369-8875

1. If not available, fabricate a valve core tool as shown in Chapter 3.

2. Remove inflator cap nut.

3. Insert valve core tool and unscrew check valve from valve stem.

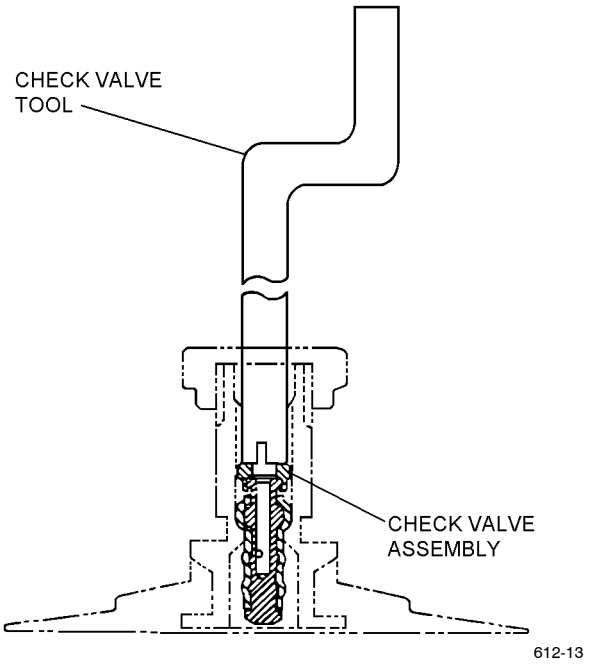

Step 3 - Para 25-64

4. Insert new check valve in valve stem and tighten with valve core tool hand tight.

5. Replace cap nut and torque to a value of 8 ±1 in-lb.

6. Perform a functional and leakage test on life preserver cell that was repaired. Refer to paragraphs 25-30 and 25-39.

25-65. FABRICATION OF PROTECTIVE COVER ASSEMBLY. To fabricate a protective cover for the inflator and CO_2 cylinder, proceed as follows:

Support Equipment Required

Quantity	Description	Reference Number
17 x 6 inches	Cloth, Nylon, Polyurethane-coated, Type I	MIL-C-83489 NIIN 01-335-3129
4 x 5/8 inches	Fastener, Tape, Hook, Type II	MIL-F-21840
4 x 5/8 inches	Fastener, Tape, Pile, Type II	MIL-F-21840
As Required	Thread, Nylon, Type I or II, Size E	V-T-295 NIIN 00-204-3885

NOTE

Use same dimensions and procedures for both protective covers.

1. To fabricate protective cover, proceed as follows:

a. Cut a 5 x 4 1/2-inch length of coated nylon cloth.

b. Cut a 4 inch length of hook and pile tape and sew to the coated side of the cloth. Use stitch type 301 stitching 8 to 10 stitches per inch.

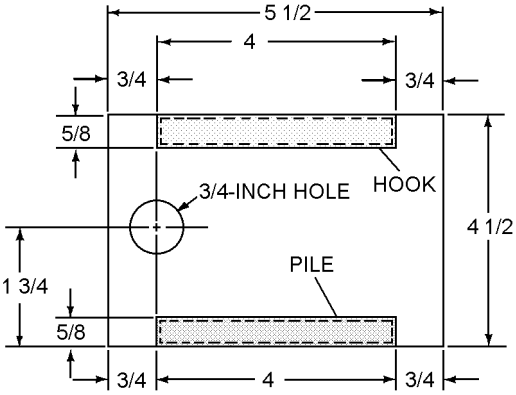

Step 1b - Para 25-65

c. Position coated cloth, coated side up, over cutting board and punch a 3/4-inch diameter hole.

2. Install protective cover before installing inflator and CO_2 cylinder.

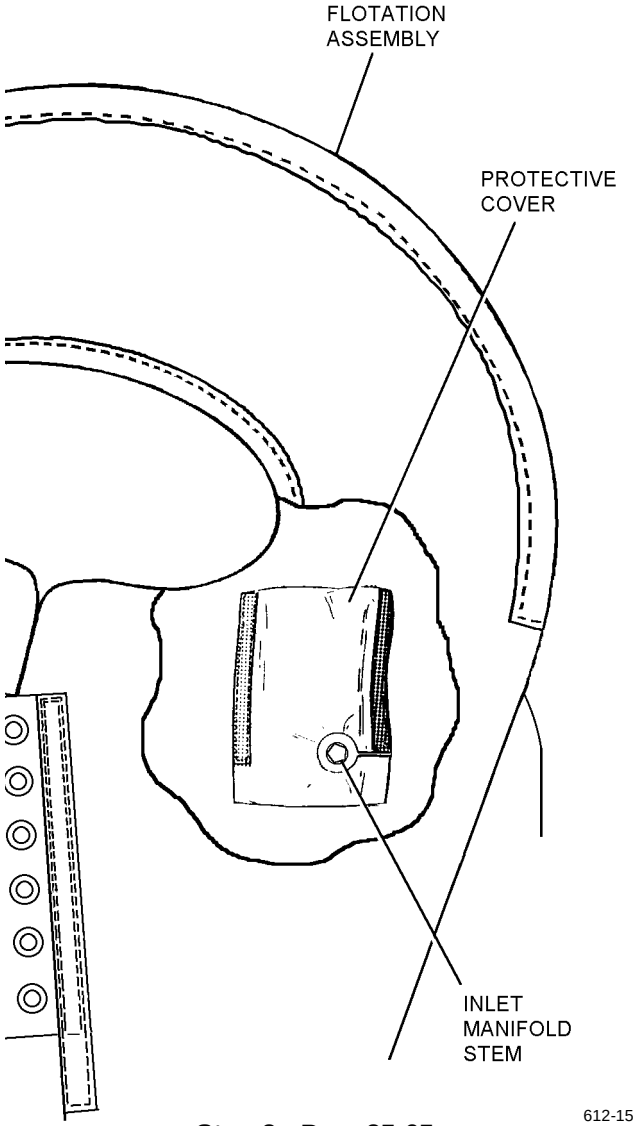

Step 2 - Para 25-65

25-65A. FABRICATION OF EXTENSION BELT ASSEMBLY. To fabricate an extension belt, proceed as follows:

Materials Required

Quantity	Description	Reference Number
As Required	Thread, Nylon Type I or II Size E	V-T-295 NIIN 00-204-3885
1	Side Release Buckle 2-Inch	P/N 101-1200-5614 (Note 1)

Materials Required (Cont)

Quantity	Description	Reference Number
18 inches	Webbing, Nylon Type VIII	MIL-W-4088 NIIN 00-261-8585

Notes: 1. Buckle is open purchase from:
ITW Waterbury
952 South Main St.
Waterbury, Connecticut 06721
Phone (203) 753-1161
(CAGE 82399)
Minimum purchase is box, 250 buckles per box.

1. Ensure both ends of 18-inch length of Type VIII webbing have been seared. Measure and mark a line 3 inches in from each end of webbing.

2. With buckle coupled, turn side with identification markings up. Reeve one end of webbing up through first (single) bar on either side of buckle until 3-inch mark is aligned with bar. Using stitch type 301, stitching 8 to 10 stitches per inch, sew a 1 1/4 x 1 1/2-inch crossbox stitch 3/8 inch in from seared end. Repeat for opposite side of buckle, ensuring no twists are in the webbing.

3. Twist webbing and buckle until identification markings are facing inboard. Extension belt is ready for use.

25-66. PACKING LPU-32/P LIFE PRESERVER ASSEMBLY.

25-67. The LPU-32/P Life Preserver Assembly shall be packed by qualified personnel at the lowest level of maintenance possible. For cleaning and servicing, refer to paragraph 25-43.

NOTE

The 28th In-Service Management Panel Meeting for Aviation Life Support Systems rescinded the requirement for the Packer to sign the History Patch on Life Preservers, via Action Chit 97-025. The requirement for all other records documentation remains unchanged. The reason for this change is most history patches are unreadable, and the Packer and Inspectors names are documented on History Cards.

25-68. To pack a LPU-32/P Life Preserver Assembly, proceed as follows.

1. Ensure that flotation collar, pouch, belt, and casing have been inspected in accordance with paragraph 25-19.

NOTE

NAVAIR 13-1-6.5 contains information on inspection and replacement of survival items.

2. Ensure that survival items have been inspected for expiration and damage. See table 25-1 for items used.

3. Lay life preserver assembly on a clean surface. Close slide fastener. Connect buckle. Either side of life preserver is folded first, followed by folding the remaining side.

NOTE

The dye marker, whistle, and chemical light shall be tied to the grommets in the pouch. Each shall be secured with a 48 ± 2-inch length of Type I nylon cord (MIL-C-5040) using bowline knots only.

4. Ensure that each survival item is properly attached.

5. Accordion fold excess stowage line and secure with a rubber band to avoid entanglement with survival items.

6. Place dye marker in bottom of pouch.

7. Position chemical light and whistle on top of dye marker.

8. Ensure that each survival item is properly stowed.

9. Zip the survival pouch closed.

10. Ensure that life preserver flotation chambers are completely deflated. Dust all surfaces front and rear with talc (MIL-T-50036A).

11. Lay out life preserver with survival item pouch to the right and buckle facing up. Spread out casing and flotation collar.

12. Ensure CO_2 cylinders are installed as per paragraph 25-46. Set screws are not applicable for the LPU-32/P.

13. Stow both oral inflation valves between bladders.

14. Fold end of top flotation chamber over approximately 1 inch from end of casing bottom.

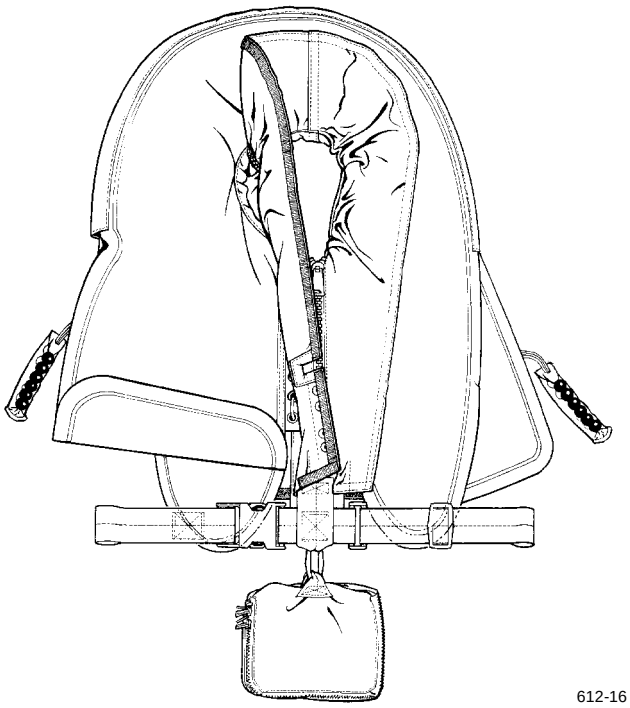

Step 14 - Para 25-68

15. Fold bottom flotation chamber under approximately 1 inch from end of casing bottom.

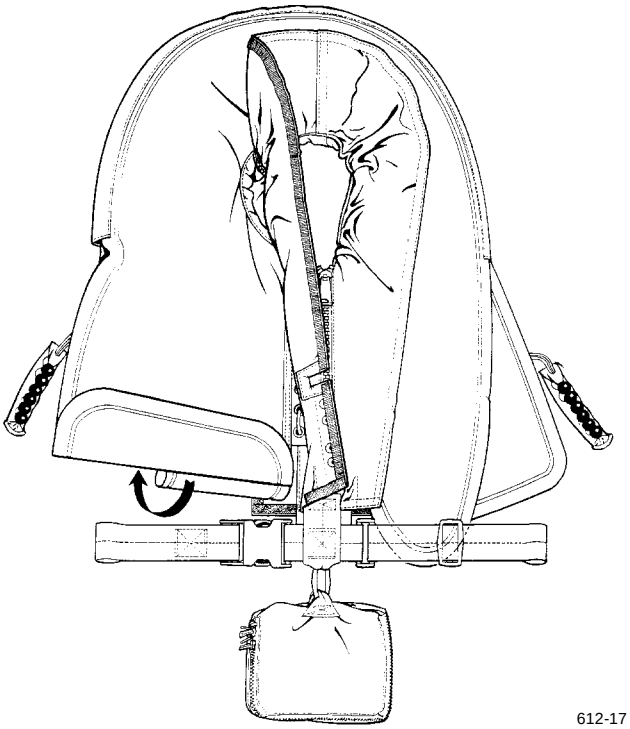

Step 15 - Para 25-68

16. Fold top flotation chamber over at approximately a 30 degree angle.

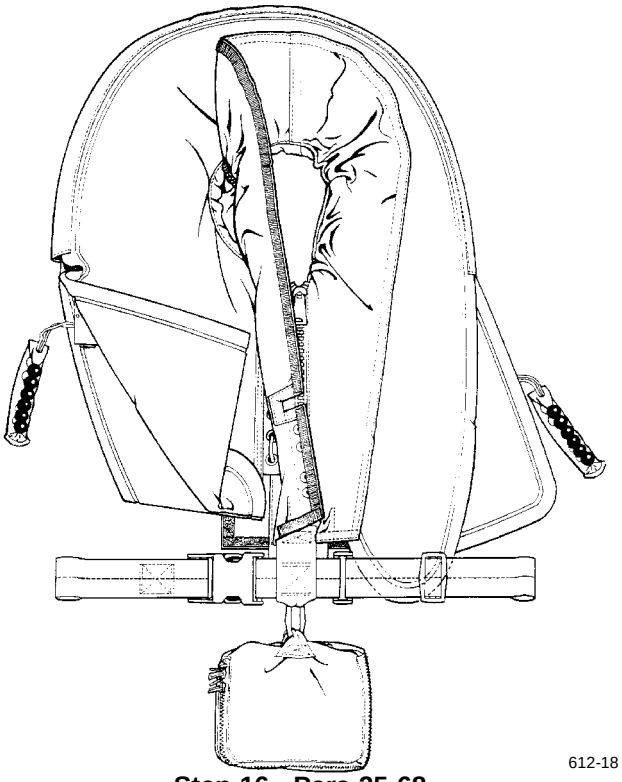

Step 16 - Para 25-68

17. Fold flotation chambers lengthwise in an S-fold.

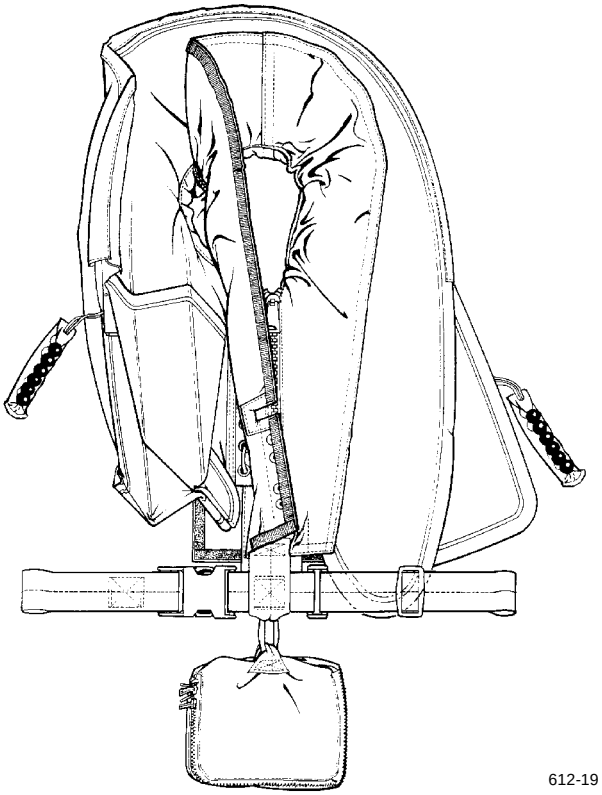

Step 17 - Para 25-68

18. Adjust fold of material to ensure that inflator bottle is positioned inboard of oral inflator valve.

19. Ensure that beaded handle exits from folded chambers.

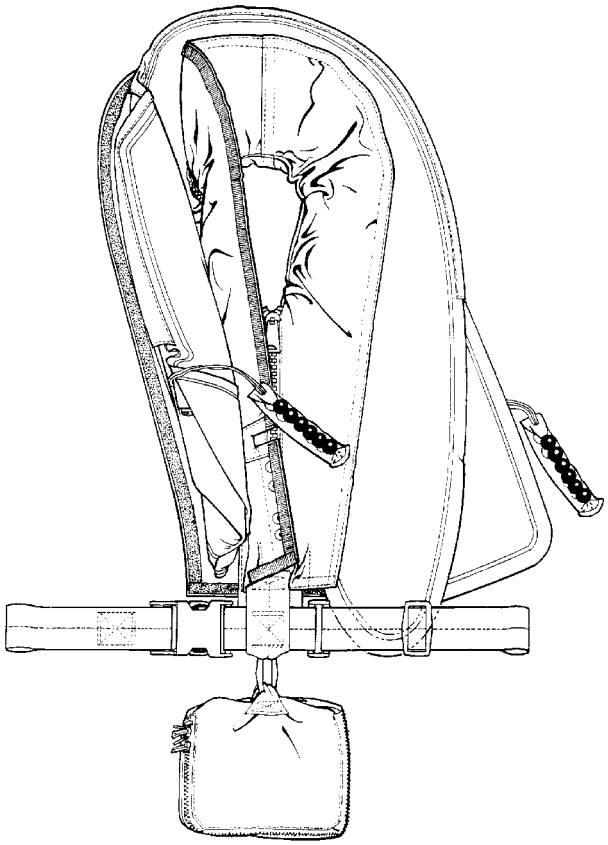

612-20

Step 19 - Para 25-68

20. Secure lower corner of stowage casing by attaching hook-and-pile tape.

21. Attach beaded handle to lower edge of casing by connecting four snap fasteners.

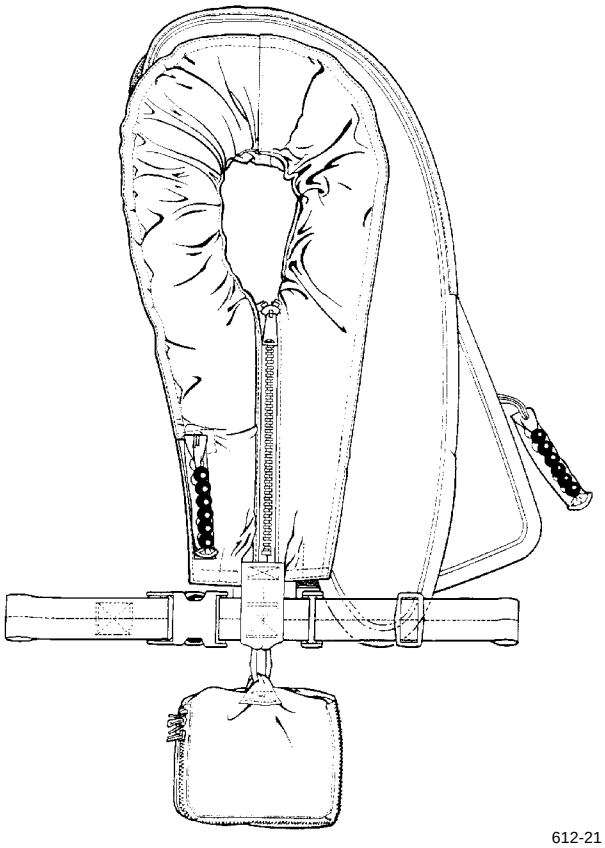

612-21

Step 21 - Para 25-68

22. Secure side of casing by attaching hook-and-pile tape.

23. Flip life preserver over, and lay out with survival pouch to the right and buckle facing down. Spread out casing and flotation collar.

24. Fold end of top flotation chamber over and fold bottom flotation chamber over approximately 1 inch from end of casing bottom.

25. Fold bottom flotation chamber under approximately 1 inch from end of casing bottom.

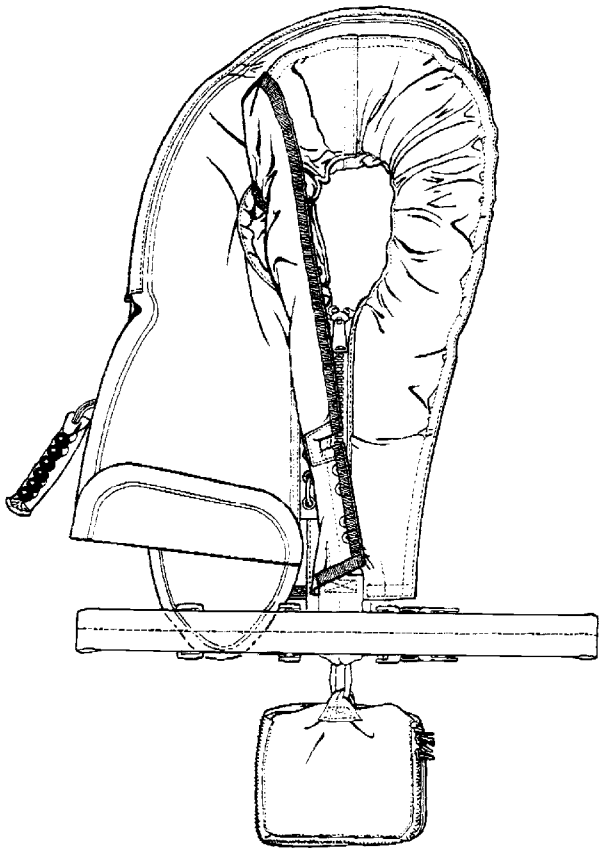

612-22

Step 24 - Para 25-68

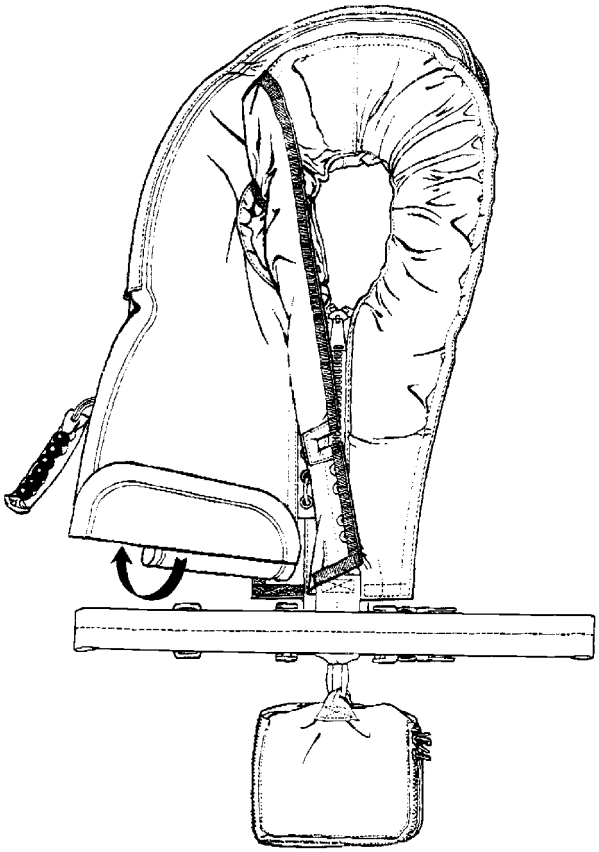

612-23

Step 25 - Para 25-68

26. Fold top flotation chamber over at approximately a 30 degree angle.

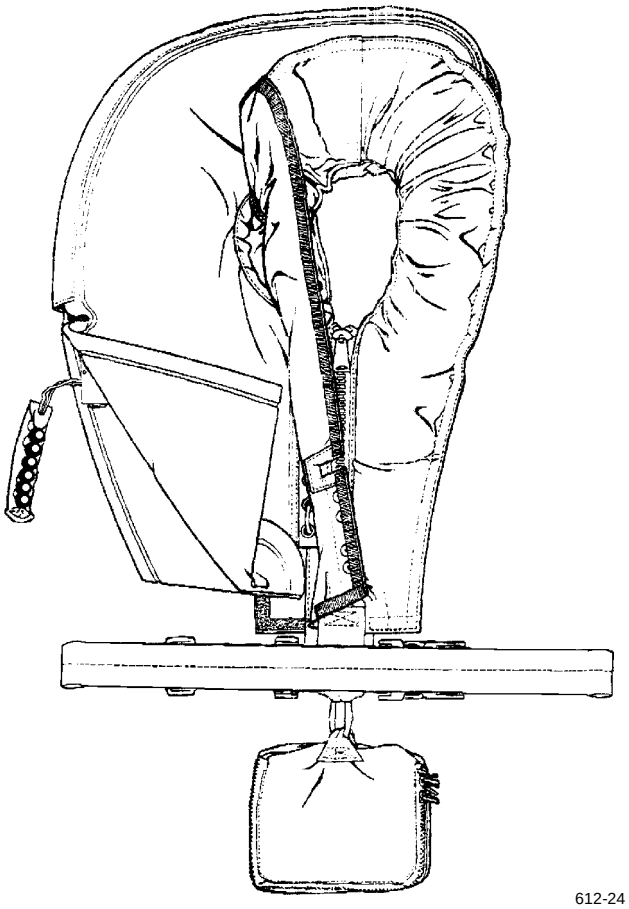

Step 26 - Para 25-68

27. Fold flotation chambers lengthwise in an S-fold.

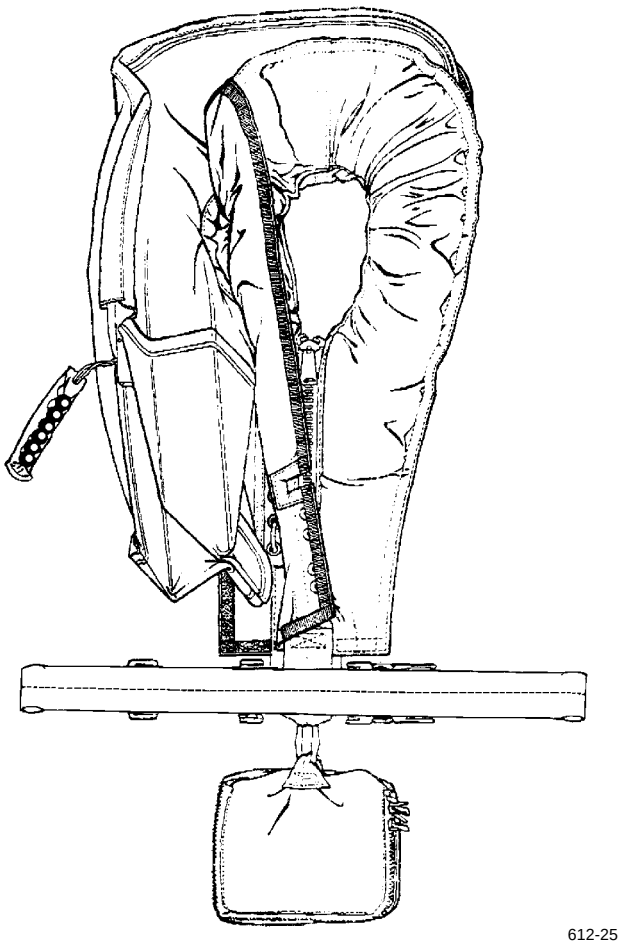

Step 27 - Para 25-68

28. Adjust fold of material to ensure that inflator bottle is positioned inboard of oral inflator valve.

29. Ensure that beaded handle exits from folded chambers.

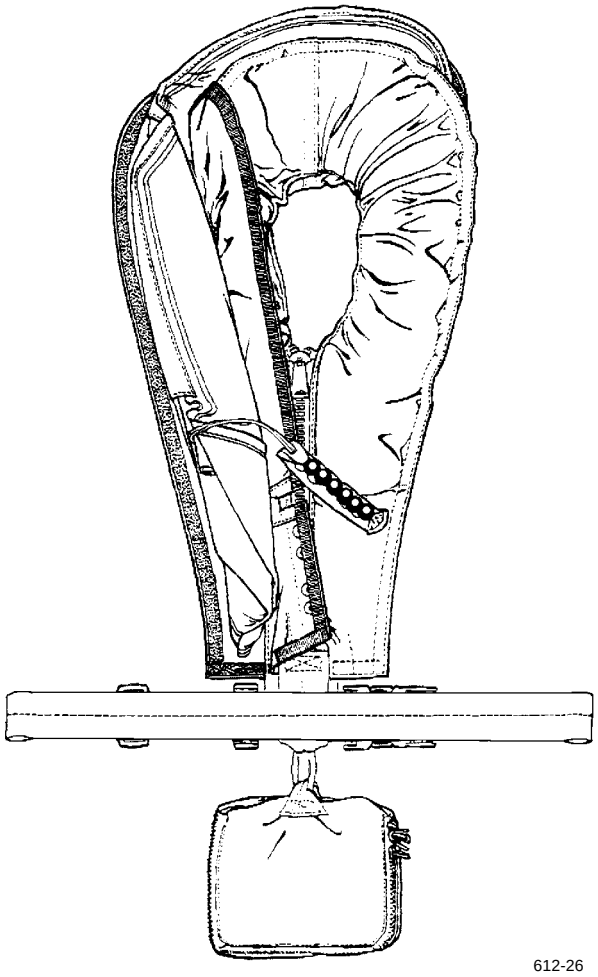

Step 29 - Para 25-68

30. Secure lower corner of casing by attaching hook-and-pile tape.

31. Attach beaded handle to lower edge of casing by connecting four snap fasteners.

32. Secure side of casing by attaching hook-and-pile tape.

33. Rotate life preserver to stow neck portion of flotation collar.

34. Fold each side of flotation collar neck at approximately 45 degrees.

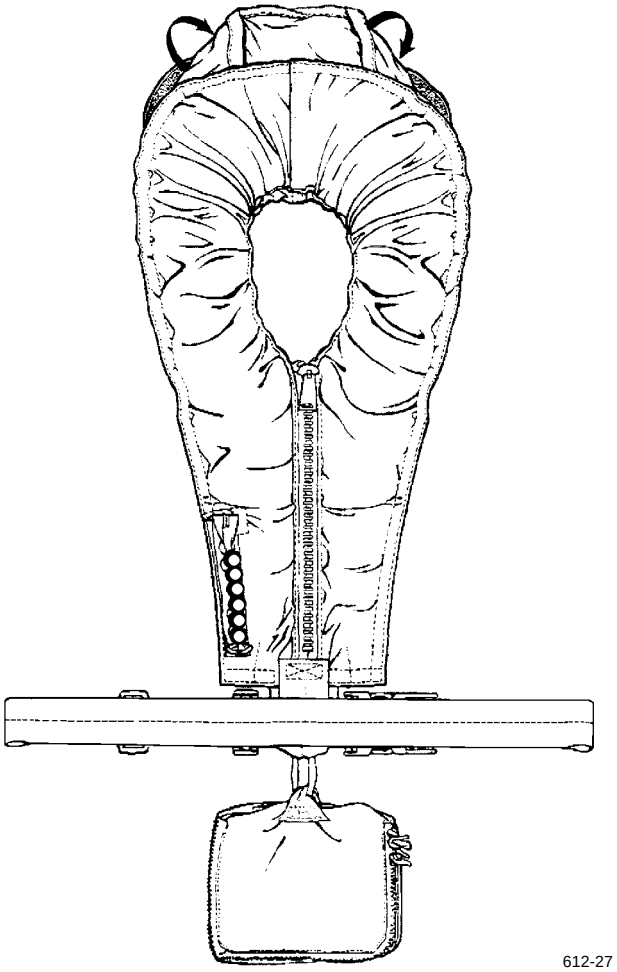

Step 34 - Para 25-68

35. Fold nape of collar in half and secure stowage casing by attaching hook-and-pile tape.

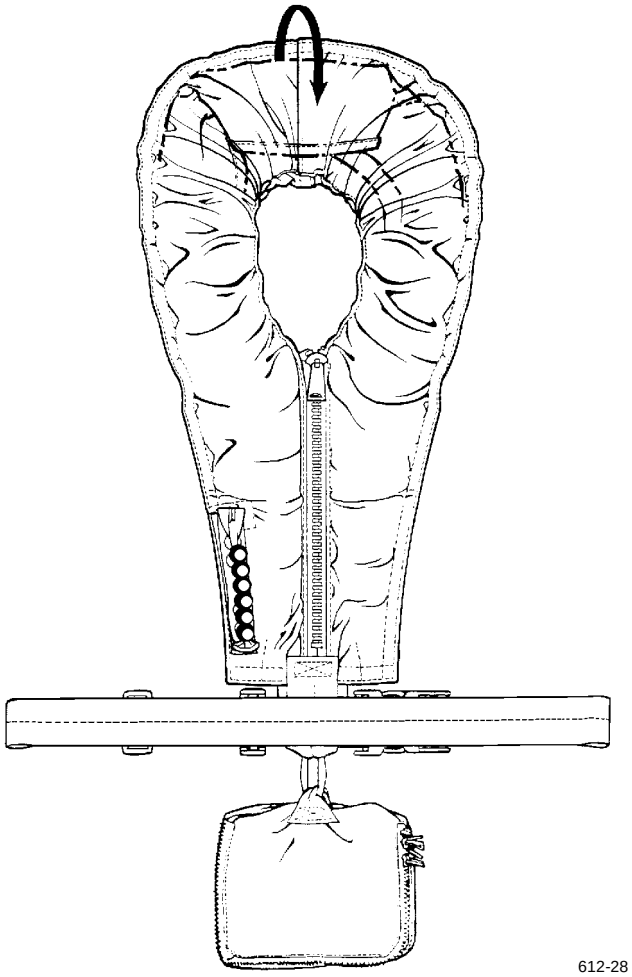

Step 35 - Para 25-68

36. Review hook-and-pile tape around perimeter of casing, adjusting as necessary for a secure attachment.

37. Safety-tie beaded inflation handle with one turn of size E nylon thread, single. Draw thread sufficiently to permit a 1/2 ±1/8 inch space between middle beads and webbing on preserver. Tie ends of both safety ties with a surgeon's knot followed by a square knot.

38. Make necessary entries on appropriate form in accordance with OPNAVINST 4790.2 Series.

Section 25-4. Illustrated Parts Breakdown (IPB)

25-69. GENERAL.

25-70. This section lists and illustrates the assemblies and detail parts of the LPU-32/P Life Preserver Assembly

25-71. The illustrated parts breakdown should be used for when requisitioning, storing, issuing, and identifying parts. It also illustrates disassembly and reassembly relationships.

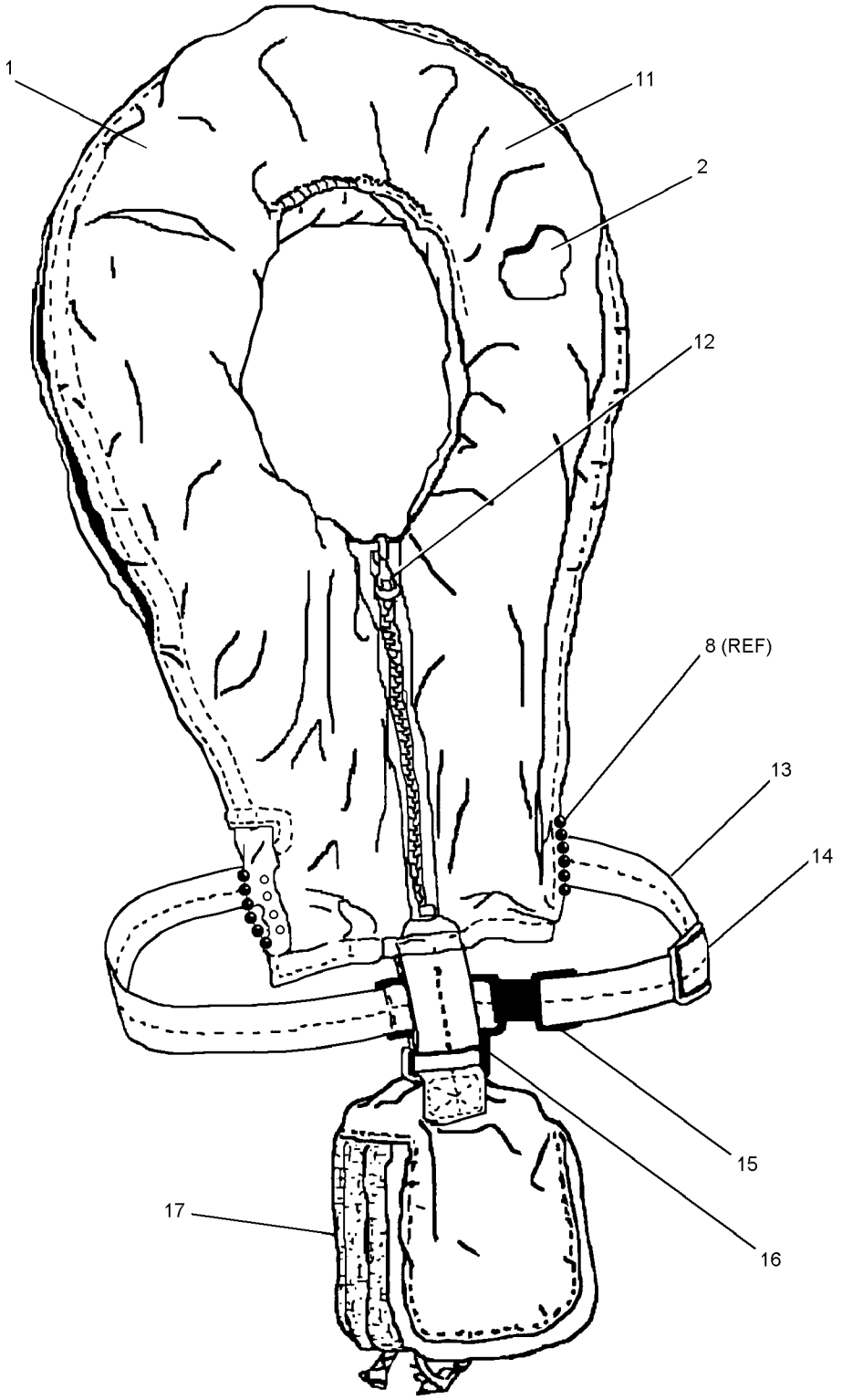

612-29-1

Figure 25-7. LPU-32/P Life Preserver (Sheet 1 of 2)

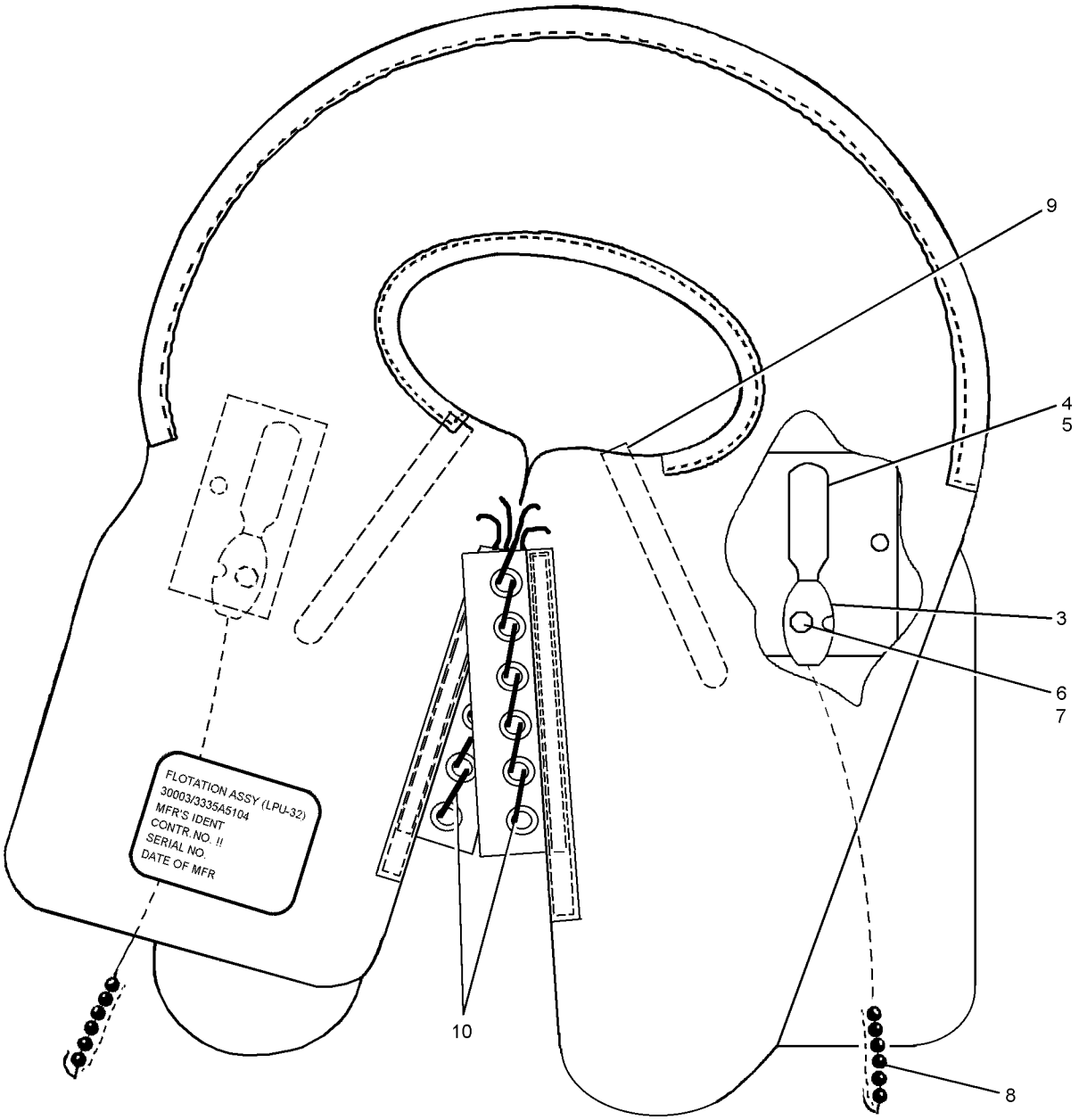

FLOTATION ASSEMBLY

612-29-2

Figure 25-7. LPU-32/P Life Preserver (Sheet 2 of 2)

Figure and Index Number	Part Number	Description 1 2 3 4 5 6 7	Units Per Assembly	Usable On Code
25-7	No Number	LPU-32/P LIFE PRESERVER ASSEMBLY	REF	
-1	3335AS101-1	. LIFE PRESERVER YOKE ASSEMBLY	1	
-2	3335AS104	. . FLOTATION ASSEMBLY	1	
-3	840AM	. . . INFLATOR	2	
-4	MIL-C-601 NIIN 00-458-9240	. . . CO_2 CYLINDER, 16g, Type III	2	
-5	849AM	. . . SEAT SEAL	2	
-6	768	. . . CHECK VALVE ASSEMBLY (Note 2) . . .	2	
-7	105AS100-6	. . . VALVE STEM KIT (Note 1)	2	
-8	975AS121-11 NIIN 01-120-4752	. . . BEADED INFLATION HANDLE	2	
-9	No Number	. . . ORAL INFLATION TUBE/VALVE	2	
-10	MIL-C-5040	. . . CORD, Nylon Type III	2	
-11	3335AS101-2	. . CASING COVER ASSEMBLY	1	
-12	V-F-106	. . . SLIDE FASTENER, Type III, Style I, ... LG 10 Heavy	1	
-13	No Number	. WAIST BELT ASSEMBLY	1	
-14	3335AS110-2	. . TRIGLIDE	1	
-15	3335AS110-1	. . SIDE RELEASE BUCKLE	1	
-16	3335AS110-3	. . LOOPLOC	1	
-17	No Number	. POUCH ASSEMBLY, Survival items	1	

Notes: 1. Top and bottom gaskets are obtained from Valve Stem Kit, P/N 105AS100-6, NIIN 00-113-8290, which contains one top and one bottom gasket.

2. Schrader-Bridgeport P/N 768 must be open purchased from:
Schrader-Bridgeport Intl
205 Frazier Rd
P.O. Box 668
Altivista, VA 24517
Phone (804) 369-8826

NUMERICAL INDEX

Part Number	Figure and Index Number	SM&R Code
MIL-C-601G	25-7-4	PAGZZ
MIL-C-5040	25-7-10	PAOZZ
ORAL VALVE	25-7-9	
POUCH	25-7-17	
V-F-106	25-7-12	PAGZZ
WAIST BELT	25-7-13	
105AS100-5	25-7-7	
3335AS101-1	25-7-1	PAOGG
3335AS101-2	25-7-11	PAGGG

Part Number	Figure and Index Number	SM&R Code
3335AS104	25-7-2	
3335AS110-1	25-7-15	
3335AS110-2	25-7-14	
3335AS110-3	25-7-16	
67A319D18-1	25-7-6	
840AM	25-7-3	PAGZZ
849AM	25-7-5	
975AS121-11	25-7-8	PAGZZ

CHAPTER 26

LPU-21C(V)1/P LIFE PRESERVER ASSEMBLY

Section 26-1. Description

26-1. GENERAL.

WARNING

LPU-21C(V)1/P life preserver assemblies shall not be used in aircraft equipped with ejection seats.

26-2. The LPU-21C(V)1/P life preserver assembly is authorized for use by all aircrew personnel wearing compatible flight clothing. It is designed as a constant wear item for use with the SV-2B Survival Vest.

26-3. CONFIGURATION.

WARNING

LPU-21C(V)1/P life preserver assemblies shall not be configured with the FLU-8/P or FLU-8B/P series automatic inflation device.

NOTE

The use of the LPU-21D/P flotation assembly with the LPU-21C/P casing is not authorized.

26-4. LPU-21C(V)1/P is not a procurable item. It is assembled by modifying the Polychloroprene flotation assembly used in the LPU-21C/P life preserver and assembling it into an LPU-21D/P casing assembly. See paragraph 26-80.

CAUTION

Use only Polychloroprene adhesives and Polychloroprene-coated cloth and patches on Polychloroprene-coated LPU-21C(V)1/P life preserver assemblies.

26-5. The LPU-21C(V)1/P Life Preserver weighs four pounds (without survival items). It consists of a casing assembly, flotation assembly, and carbon dioxide (CO_2) inflation assemblies. Two independent flotation chambers constructed of Polychloroprene-coated nylon cloth provide a combined minimum buoyancy of 65 pounds. One chamber consists of the left waist lobe joined by a channel to the right collar lobe. The other chamber is comprised of the right waist lobe joined by a channel to the left collar lobe. The two chambers are sewn together at the center seam flash of the collar lobes. Each chamber is serviced by a CO_2 inflation assembly and an oral inflation valve which are installed in each waist lobe (see figures 26-1 and 26-2.)

26-6. The inflation chambers provide an integral protective pocket for the oral inflation valve. The pocket consists of a narrow open-end sleeve extending from the upper seam of each waist lobe bladder (figure 26-2). When folded at its root toward the oral inflation valve, the sleeve becomes a pocket positioned for insertion of the valve.

26-7. Attached to each waist lobe of the modified flotation assembly is an attachment patch with six uni-directional snap fastener sockets installed. These snap fastener sockets, when mated to six uni-directional snap fastener studs on the casing assembly, secure the waist lobes of the flotation assembly to the casing assembly. The right

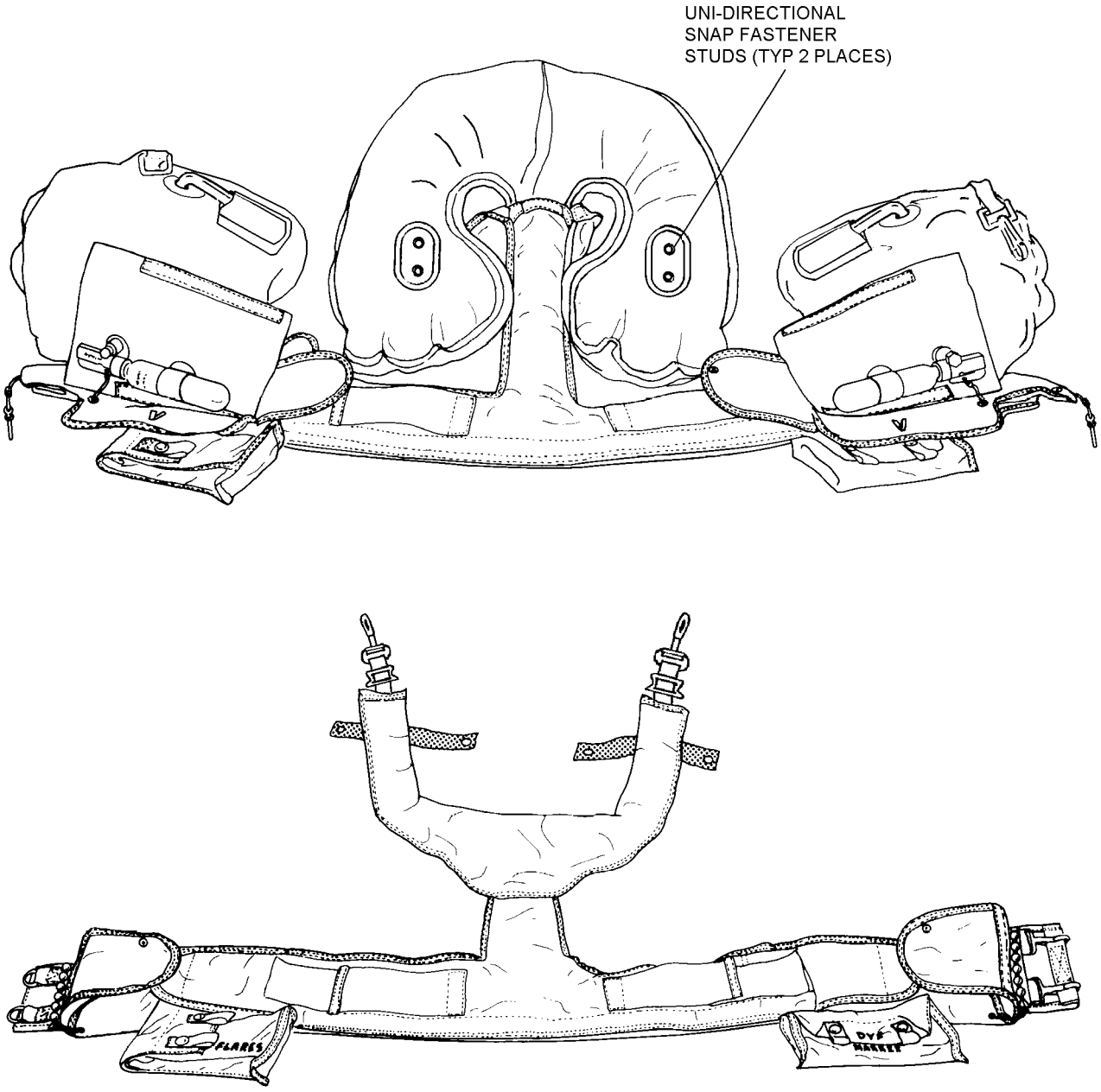

10260001

Figure 26-1. LPU-21C(V)1/P Life Preserver Assembly

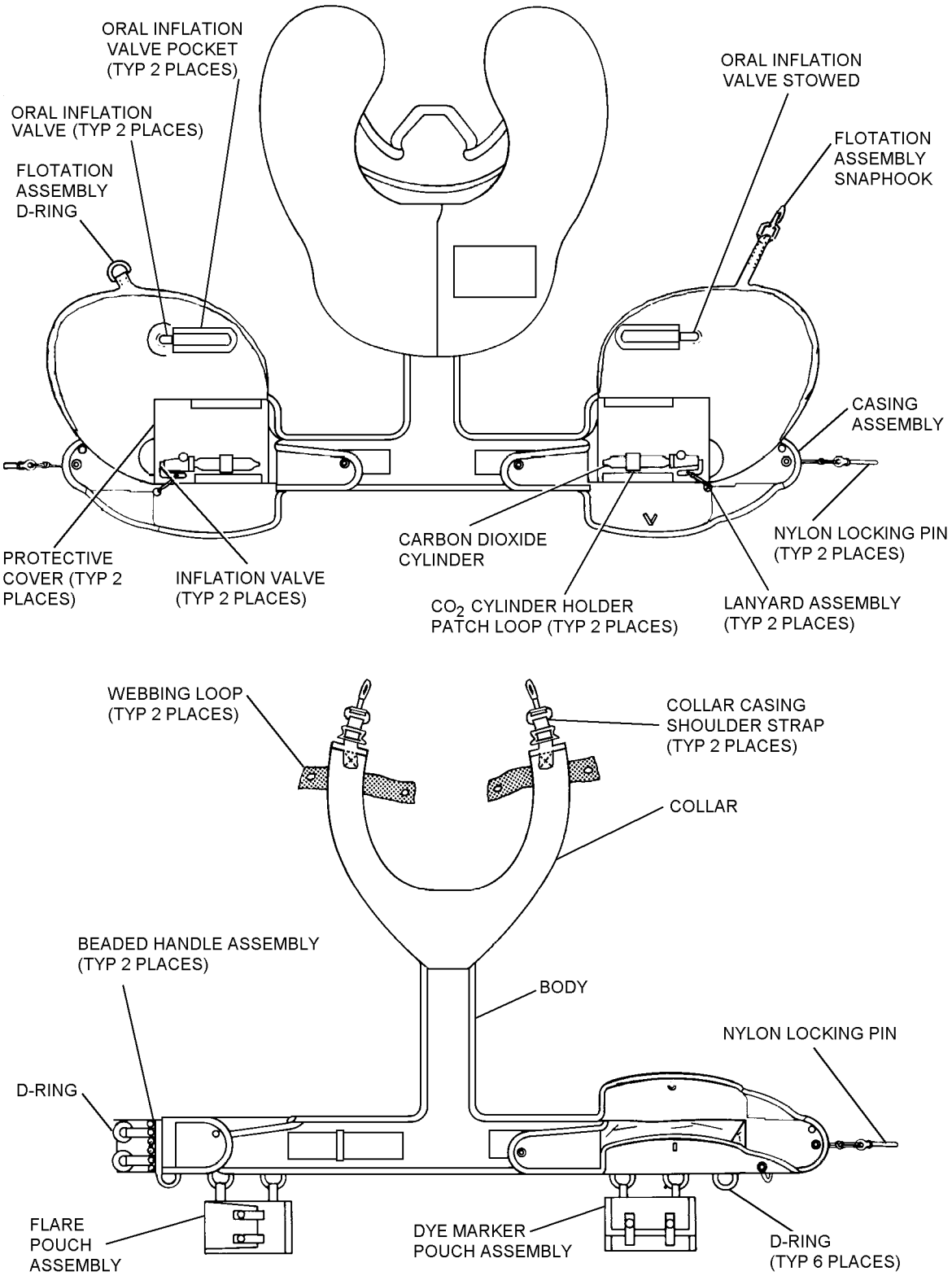

Figure 26-2. LPU-21C(V)1/P Life Preserver Assembly, Parts Nomenclature

waist lobe is equipped with a snaphook which connects with a D-ring on the left waist lobe to secure the lobes together after inflation.

NOTE

The uni-directional snap fastener socket is installed with the dot on its button oriented to the side of the fastener on which lift must be applied to disengage the socket from the snap fastener stud.

26-8. Two uni-directional snap fastener studs, whose centers are 1 1/4 inches apart, are installed on each collar lobe of the modified flotation assembly. The snap fastener studs connect with two uni-directional snap fastener sockets on the casing collar assembly to secure the flotation collar lobes to the casing collar assembly. The dots on the two buttons of the casing assembly uni-directional snap fastener sockets are oriented to the inside, facing each other. To disengage the sockets from the uni-directional snap fastener studs, insert one finger beneath the edge of the casing fabric between the two snap fasteners and apply lift.

26-9. CASING ASSEMBLY. The casing assembly, which is constructed of fire retardant aramid cloth, provides a protective cover for the flotation assembly. The casing assembly consists of the adjustable casing, belt keeper loops, uni-directional snap fastener sockets on the collar assembly (which mate with snap fastener studs on the collar lobes), uni-directional snap fastener studs on the inside waist portion (which mate with snap fastener sockets on the waist lobes), and the front connector assembly.

26-10. The webbing belt, which was a part of the LPU-21A, -21B and -21C/P has been deleted from the LPU-21C(V)1/P. Webbing belt keeper loops have been retained and provide a means for attaching the survival vest about the wearer's waist. Six D-rings attached to the webbing belt keeper loops provide attach points for the life raft retaining line and other accessories.

26-11. Hook and pile tapes, attached to the outside waist portion of the casing, are used for slack adjustment. In addition, hook and pile tapes, attached about the periphery of the collar casing and the lower edge of the back portion of the casing, are used to enclose the casing assembly about the flotation assembly.

26-12. The front connector assembly secures the casing assembly about the wearer's waist. The front connector assembly consists of two snap-hooks and two D-rings backed by webbing pads to prevent abrasion and discomfort.

26-13. FLOTATION ASSEMBLY. The flotation assembly is constructed of polychloroprene-coated nylon and consists of two independent flotation chambers. The waist lobe of each chamber contains an oral inflation valve and a primary valve stem upon which the inflation assembly is installed. A check valve is installed in the valve stem to prevent back-pressure leakage. There are two snap fastener studs affixed to each collar lobe which mate with uni-directional snap fastener sockets on the casing assembly. Attached to each waist lobe is an attachment patch containing six uni-directional snap fastener sockets which secure the waist lobes to the casing assembly. Each of the six snap fasteners of the attachment patch requires lift from a different direction to disengage flotation lobe from casing assembly. This is a safety factor to prevent separation of the flotation lobe upon impact when entering the water from a height.

NOTE

The uni-directional snap fastener socket is installed with the dot on its button oriented to the side of the fastener on which lift must be applied to disengage the socket from the snap fastener stud.

26-14. INFLATION ASSEMBLY. A carbon dioxide (CO_2) inflation assembly services each of the inflation chambers of the flotation assembly. The inflation assembly consists of the body (inflator) of the assembly, upper and lower pressure-seal gaskets, and a cap nut which secures the inflator to the valve stem installed in the waist lobe and serves as a cap for the valve stem. The assembly also includes a 35 gram Type III carbon dioxide cylinder which is threaded, with an O-ring, into the inflator body. An inflation lanyard attached to the actuating lever of the inflation assembly connects with the beaded inflation handle and the nylon locking pin of the casing assembly.

26-15. APPLICATION.

26-16. The LPU-21C(V)1/P life preserver is authorized for use only by aircrew personnel in aircraft without ejection seat systems. It was designed for use as a constant wear item with the SV-2 survival vest system by aircrew personnel wearing compatible flight clothing.

26-17. FUNCTION.

NOTE

Although the beaded inflation handle provides a multidirectional capability for initiating inflation of the life preserver, only the most effective and commonly used method is discussed here.

26-18. Inflation of the LPU-21C(V)/P life preserver is initiated by pulling both beaded inflation handles in a natural, slightly down and straight out direction away from the body. The resulting action removes the nylon locking pins, which secure the casing assembly about the waist lobes, and actuates the inflation assembly. As the flotation assembly inflates, the hook and pile tapes securing the casing assembly about the collar separate to free the collar lobes. After inflation, the flotation assembly D-ring and snap-hook on the waist lobes must then be connected by the wearer.

NOTE

After each functional inflation, the CO_2 cylinder and seat seal gasket must be replaced with a charged CO_2 cylinder and a new seat seal gasket.

The casing must be manually opened and the flotation assembly unfolded prior to inflating a preserver through the oral inflation valve.

26-19. In an emergency situation, the oral inflation valves may be used to top-off an inflated preserver, maintain inflation of a leaky preserver or inflate a chamber if an inflation assembly malfunctions. The oral inflation valves are also used to inflate a preserver with air during an inspection test and to evacuate a preserver in preparation for packing.

26-20. Survival item pouches are attached to the life preserver casing. The dye markers and signal flares are not initially supplied and must be individually requisitioned. Refer to table 26-1 and see figures 26-1 and 26-2.

Table 26-1. LPU-21C(V)1/P Survival Items

Description	Quantity Required	Reference Number	NIIN	SM&R Code
Dye Marker (Note 1)	2	MIL-S-17980	00-270-9986	PAOZZ
Signal, Smoke and Illumination, Marine MK-124 MOD 0 (Note 1)	2	—	01-030-8330	PA--Z
Notes: 1. Optional equipment at the discretion of the Squadron Commander.				

Section 26-2. Modification

26-21. GENERAL.

26-22. There are no authorized modifications to the LPU-21C(V)1/P life preserver at this time.

26-23. Common repairs and fabrication instructions to maintain serviceability are listed in table 26-2.

Table 26-2. LPU-21C(V)1/P Common Repairs and Fabrications

Description of Repair or Fabrication	Paragraph Number
Determination of Repairability	26-58
Casing Repair Procedures	26-60
Casing Grommet Replacement Procedures	26-61
Cementing Life Preservers	26-62
Patching Life Preservers	26-63
Replacement of Oral Inflation Valve	26-65
Recementing of Bladder Fin Seams	26-66
Fabrication of Slip-On Pockets For Life Preserver Hardware	26-67
Replacement of Flare and Dye Marker Pouch Snaphooks	26-68
Flare Pouch Repair	26-69
Disassembly of the Life Preserver	26-70
Reassembly of Life Preserver	26-71
Replacement of Beaded Inflation Handle Assembly	26-72
Repair of Corroded CO_2 Inflation Valve	26-73
Replacement of Top and Bottom Gaskets	26-74
Replacement of Check Valve Assembly	26-75
Fabrication of Protective Cover Assembly	26-76
Addition of Collar Lobe Webbing Loops	26-77
Fabrication and Installation of Locking Pin Cover	26-78
Replacement of Collar Lobe Snap Fasteners and Webbing	26-79
Fabrication of LPU-21C(V)1/P Life Preservers	26-80
Fabrication and Installation of Waist Lobe Attachment Patch	26-81
Fabrication and Installation of Collar Lobe Snap Fastener Studs	26-84

Section 26-3. Maintenance

26-24. GENERAL.

26-25. This section contains information on inspection, disassembly, repair/replacement, testing, and reassembly of the LPU-21C(V)1/P life preserver.

26-26. INSPECTION.

26-27. All life preservers shall be subjected to Preflight, Special and Calendar/Phase Inspections.

26-28. The Preflight Inspection shall be performed on life preservers prior to each flight by the aircrewmember to whom the life preserver is assigned. The Preflight Inspection shall be performed on life preservers installed in aircraft prior to each flight by assigned aircrewmembers.

26-29. The Special Inspection shall be performed on all aircraft installed life preservers at intervals not to exceed 30 days. The inspection shall be performed at the organizational level of maintenance by personnel assigned to the Aviator's Equipment Branch.

26-30. Upon completion of the inspection, make necessary entries on the appropriate form in accordance with OPNAVINST 4790.2 Series. The 30-Day Special Inspection may be recorded on a separate history card from the history card recording Calendar/Phase Inspections, functional checks, and modifications.

NOTE

The Calendar Inspection interval for preservers assigned selected air reserve aircrewmembers has been extended to 180 days vice 90 days, providing preservers are stowed under controlled conditions.

26-31. The Calendar/Phase Inspection shall be performed on all life preservers prior to placing in service. The inspection cycle thereafter shall be as follows: personal issue life preservers shall be inspected once every 90 days. Aircraft-installed life preserver inspection shall coincide with the inspection cycle of the aircraft in which installed. See applicable Planned Maintenance System (PMS) publications for specific intervals. In no case shall the interval exceed 231 days. Unless operational requirements demand otherwise, the life preserver Calendar/Phase Inspection shall be performed by the intermediate level of maintenance or above. The functional test shall be performed prior to placing in service, every fourth inspection cycle thereafter, and whenever an inflation assembly is replaced. The leakage test shall be performed during every inspection cycle. If inspection indicates damage, complete appropriate forms in accordance with OPNAVINST 4790.2 Series and forward entire assembly to supply. Refer to paragraph 26-58 for determination of repairability.

26-32. QUALITY ASSURANCE. Properly detailed procedures present a logical sequence for the inspection process. The more critical procedures are underlined to designate steps which require a Quality Assurance inspection to assure performance of specific requirements. After the underlined step is performed by the Aircrew Survival Equipmentman, the procedure shall be verified before the next step is performed. This verification shall be performed by a Collateral Duty Inspector or Quality Assurance Representative (CDI, CDQAR, or QAR). Work Center supervisors are primarily responsible for quality assurance within their centers. OPNAVINST 4790.2 Series permits supervisors to nominate their more experienced personnel to serve as quality assurance inspectors. Nominated personnel shall be screened and examined by the Quality Assurance Officer prior to their designation as Quality Assurance Inspectors or Quality Assurance Representatives by the Commanding Officer. Under no circumstances shall an Aircrew Survival Equipmentman perform his own quality assurance inspection.

26-33. PREFLIGHT/SPECIAL INSPECTION. To perform a Preflight/Special Inspection, proceed as follows:

WARNING

Ensure that the beaded inflation handles are readily accessible. Beaded inflation handles shall be secured with four snap fasteners to the life preserver end flap.

CAUTION

Do not open any sealed or safety-wired/safety-tied portions of preserver for Pre-flight/Special Inspection.

1. Inspect exposed metal parts for corrosion and damage.

2. Inspect for presence, security of attachment and, if applicable, operation of survival items.

3. Inspect casing fabric for cuts, tears, abrasions, security of stitching, and other damage.

4. Ensure beaded inflation handles are secured to snap fasteners. Inspect safety-ties on beaded inflation handles. The beaded inflation handle safety-ties may be replaced without removing the life preserver from service.

5. Inspect safety-ties on locking pins.

6. Inspect uni-directional snap fasteners securing flotation assembly to casing assembly for presence, security of attachment, corrosion, and ease of operation.

7. Inspect hook and pile tape closure at collar for separation; fasten as necessary.

8. Adjust and don preserver to ensure proper fit.

9. If any discrepancy is noted, the preserver shall be removed from service and repaired in accordance with procedures in this volume.

26-34. ACCEPTANCE/CALENDAR/PHASE INSPECTION. The Acceptance/Calendar/Phase Inspection consists of the following tasks:

1. Beaded Inflation Handle Inspection

2. Case, Container/Pouch Inspection

3. Functional Test (every fourth inspection cycle)

4. Visual Inspection

5. Life Preserver Configuration

6. General Inspection

7. Markings Inspection

8. Survival Items Inspection

9. Inflation Assembly Inspection

10. Beaded Inflation Handle Pull Test

11. Leakage Test

12. Records Updating

13. Repacking

26-35. BEADED INFLATION HANDLE INSPECTION. Inspect beaded inflation handle for the following:

1. Attachment of inflation lanyard to beaded handle.

2. Attachment of locking pin lanyard to beaded handle. Overhand knot on locking pin lanyard shall be within 3/4 inch from eye of pin.

3. Corrosion on snap fasteners and ease of operation.

4. Cuts, tears, deterioration, abrasion, stains, and general cleanliness of fabric.

5. Presence of safety tie on beaded inflation handle.

26-36. CASE, CONTAINER/POUCH INSPECTION. To inspect cases, containers, and/or pouches, proceed as follows:

1. Inspect fabric for cuts, tears, deterioration, abrasion, stains, and general cleanliness.

2. Inspect seams for proper adhesion or stitching.

3. Inspect straps and loops for security and wear.

4. Inspect any other parts for wear, damage, and security.

NOTE

Life preservers missing the D-rings used to attach dye marker and flare pouches shall be considered serviceable provided the aircrewmember to whom it is issued does not desire to utilize the pouches.

5. All hardware for security of attachment, corrosion, damage, wear and, if applicable, ease of operation.

6. Inspect uni-directional snap fastener assemblies for presence, security of attachment, proper orientation, ease of operation, corrosion, and wear.

NOTE

All uni-directional snap fasteners shall be installed with the dot on the button of the snap fastener socket positioned on the side of the snap fastener to which lift must be applied to disengage the socket from the snap fastener stud.

All snap fasteners on the attachment patch of each flotation lobe shall be installed with the dot on each socket button positioned nearest to, and pointing toward, the center point of the attachment patch.

7. If any discrepancies are found, the case, container, or pouch shall be repaired or removed from service as deemed appropriate by the inspection activity.

26-37. FUNCTIONAL TEST. To perform a functional test, proceed as follows:

CAUTION

Ensure area surrounding preserver is free of foreign objects.

1. Completely open preserver casing prior to conducting functional test. Both release pins shall be removed from their respective loops, the collar hook and pile tape fasteners shall be separated, and the waist and collar lobes shall be completely unfolded and laid out flat.

2. Actuate inflation assemblies.

3. The preserver shall fully inflate to design shape, without evidence of restriction, in less than 30 seconds.

4. If preserver does not properly inflate, determine cause. Ensure stem and valve are clean and free of foreign matter.

5. If correction is made, the preserver shall be functionally tested again.

6. Deflate preserver in accordance with paragraph 26-38 to remove all CO_2.

26-38. DEFLATION. To deflate a life preserver, proceed as follows:

Support Equipment Required

Quantity	Description	Reference Number
1	Pump, Rotary Vacuum (or equivalent)	NIIN 00-052-5015 (90567)
As Required	Hose, 3/8- or 1/2-inch Inside Diameter, Rubber	—

1. Attach one end of rubber hose to vacuum pump.

2. Deflate through oral inflation valves. Unlock oral inflation valve, hold in open position, and hold vacuum pump hose against end of oral inflation valve. When compartment is collapsed, release oral inflation valve. Screw lock closed.

26-39. VISUAL INSPECTION. Prior to visually inspecting a life preserver assembly, the life preserver shall be inflated with air to 1.0 psig.

CAUTION

Remove all carbon dioxide cylinders prior to inflating life preserver with air.

NOTE

If suitable air source is not available, water- pumped nitrogen (FED SPEC BB-N-411) may be substituted.

26-40. LIFE PRESERVER CONFIGURATION. The life preserver shall be updated by comparing it to the configuration illustrations, figures 26-1 and 26-2, and section 26-4.

26-41. GENERAL INSPECTION. Examine life preservers for the following:

NOTE

Refer to the referenced paragraph number at end of inspection for repairs.

1. Preserver fabric for cuts, tears, punctures, deterioration and abrasion. Refer to paragraph 26-60 for repair instructions.

2. Flotation assembly seams for proper adhesion. Refer to paragraph 26-66 for instructions.

3. Valve inlet stems for security.

4. Oral inflation valve(s) for cracks, security, ease of operation, and corrosion.

5. Patches for proper adhesion and wear. Refer to paragraph 26-63 for repair instructions.

6. Any other parts for wear or other damage.

7. All hardware for security of attachment, corrosion, damage, wear and, if applicable, ease of operation.

8. Preservers for stains, dirt, and general cleanliness. Refer to paragraph 26-50 for cleaning instructions.

9. Cross threading and/or loose manifold nuts.

26-42. MARKINGS INSPECTION. To inspect and restore marking, proceed as follows:

Materials Required

Quantity	Description	Reference Number
1	Ink, Marking, Laundry, Black	SPE-92 NIIN 00-161-4229
	-or-	
As Required	Ink, Drawing, Waterproof, Yellow	A-A-59291 NIIN 00-634-6583

1. Compare markings on preserver to those listed in table 26-3.

NOTE

A LPU-21C/P Flotation assembly which has been installed in an LPU-21D/P casing is designated an LPU-21C(V)1/P life preserver assembly. See paragraph 26-80.

2. Restore any faded markings.

3. Deleted.

4. Correct any markings which do not agree with table 26-3. Paint out old marking and enter new marking as close to proper position as possible.

26-43. SURVIVAL ITEMS INSPECTION. To inspect survival items, proceed as follows:

1. Inventory items by checking items against table 26-1. Replace any missing or unsatisfactory item.

NOTE

NAVAIR 13-1-6.5, Rescue and Survival Equipment contains detailed information on the inspection of survival items.

2. Inspect all items for damage, spent contents and expired service life. Replace as necessary.

3. Operate items which are not intended for one-time use. Replace as necessary.

26-44. INFLATION ASSEMBLY INSPECTION. To inspect life preserver inflation assemblies, proceed as follows:

1. Loosen CO_2 cylinder locking screws, if present, and remove CO_2 cylinders from valve assembly.

2. Examine inflation device, actuating lever and lanyard, and locking pins for fraying, corrosion, stripped threads, and other damage.

3. If required, remove any sharp edges from valve with a fine round file.

4. Operate actuating lever several times. Ensure that lever moves freely and ensure that piercing pin moves properly inside valve body. Inspect point of piercing pin for serviceability. If point is flat, rounded, dull, or otherwise worn or damaged, replace inflation assembly.

Table 26-3. LPU-21C(V)1/P Life Preserver Markings

Marking	Location	Letter Height
LPU-21C(V)1/P	Outside surface of collar delivery tube case	Optional
CASING, LIFE PRESERVER, LPU-21C(V)1/P PART NO. CONTRACT NO. [applicable number] MANUFACTURER [applicable number] DATE OF MANUFACTURE [month and year] SERIAL NO. [applicable number]	Center of casing waist section (inside)	5/16 inch 3/16 inch
DYE MARKER	Pouch (right side)	1/2 inch
FLARES	Pouch (left side)	1/2 inch
Notes: 1. Replacement markings shall be stamped or stenciled using waterproof black ink.		

NOTE

Each time inflation assembly gaskets or inflation assembly is removed and replaced for any reason, a functional test shall be conducted. Refer to paragraph 26-37. Use new gaskets when replacing device.

5. If any discrepancy is noted in device that is not repairable in accordance with paragraph 26-73, remove assembly and install a new inflation device.

6. If CO_2 cylinder locking screws are installed, remove them.

26-45. BEADED INFLATION HANDLE PULL TEST. To perform the inflation lanyard pull test, proceed as follows:

Support Equipment Required

Quantity	Description	Reference Number
1	Gage, Dial, Push/Pull, 0 to 50 lb	DPPH50 (CAGE 11710) or equivalent NIIN 00-473-0108

1. Ensure that CO_2 cylinder has been removed. Actuate the inflator assembly. All snap fasteners on beaded inflation handle must be fully engaged.

2. Attach gage to webbing between third and fourth bead on inflation handle.

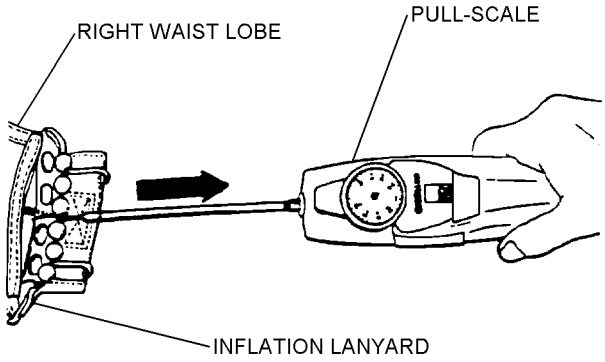

Z0045002

Step 2 - Para 26-45

3. Hold inflator steady. Slowly exert a 25-pound straight pull on webbing. All snap fasteners should release at or before 25 pounds.

4. If all snap fasteners do not release at or before the 25 pound limit, inspect the male and female snap fasteners for damage. Replace the entire beaded inflation handle if required and repeat steps 1 through 4.

5. If the snap fasteners release properly, leave the pull scale attached, add an additional 25 pound force to check the security of the beaded handle attachment to the inflation lanyard. Examine inflation lanyard for frays, ruptures, thin spots, split casing, and security of stitches and knots. If unsatisfactory, replace the entire beaded inflation handle. Refer to paragraph 26-72.

26-46. LEAKAGE TEST. All life preservers shall be subjected to a leakage test each Calendar/Phase Inspection. To perform a leakage test proceed in accordance with paragraph 26-48.

26-47. Test Fixture. A suggested test fixture, consisting of a three-way valve, pressure gage, and adapters for compartments being tested, is shown in Chapter 3. Test fixtures must be fabricated to meet the requirements of the schematic shown in figure 26-3.

26-48. Test Procedure. To test life preservers, using test fixture shown in Chapter 3, proceed as follows:

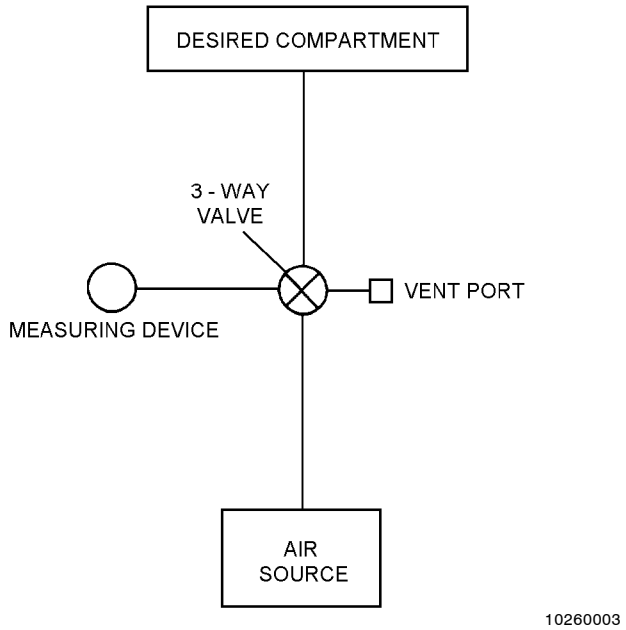

Figure 26-3. Test Fixture Schematic

CAUTION

Ensure test area is free of foreign objects.

1. Ensure all carbon dioxide has been removed from any preserver which has been functionally tested.

CAUTION

If 3-way valve is not used, measuring device valve must be closed when air feed valve is open.

Damage may occur to oral inflation valve if air supply pressure entering the life preserver exceeds ten (10) psi during this test.

NOTE

If a suitable air source is not available, water-pumped nitrogen (BB-N-411) may be substituted.

2. Unlock oral inflation valve and insert into rubber hose. Rotate valve to air supply position and inflate chamber. Alternately position valve between measuring device, vent and air supply until proper pressure of 2.0 psig is attained in both chambers.

3. The air supply shall be securely shut off and after a minimum of 15 minutes, the pressures shall be readjusted, if necessary, to the leakage test pressures. Record time.

4. Disconnect air supply and check for leaks. Ensure all valves are closed.

5. Record temperature and barometric pressure.

6. After a minimum of 4 hours after completing step 3, record test pressure of both chambers. Test pressure shall not decrease to less than 1.6 psig for a life preserver chamber, from a maximum test pressure of 2.0 psig.

7. Record temperature and barometric pressure and correct test pressure for any changes in temperature and barometric pressure. Refer to tables 26-4 and 26-5.

EXAMPLE

UNCORRECTED TEST READING 1.70 PSI

	TEMP.	BARO.
START	75° F	29.90 IN. Hg
END	70° F	29.70 IN. Hg
DIFFERENCE	- 5° F	-0.20
CORRECTION	+0.155	-0.098

TEMP. CORRECTION	+ 0.155
+ BARO. CORRECTION	- 0.098
CORRECTION	+ 0.057

UNCORRECTED READING	1.700 PSI
+ CORRECTION	+ 0.057
CORRECTED READING	1.757 PSI

Z0048007

Step 7 - Para 26-48

Table 26-4. Temperature Conversion Chart

Temperature Difference (°F)	Correction (psig)
1	0.031
2	0.062
3	0.093
4	0.124
5	0.155
6	0.186
7	0.217
8	0.248
9	0.279
10	0.310

Rise in temperature: subtract from gage reading.
Fall in temperature: add to gage reading

8. If pressure of chamber is below 1.6 psig inflate to leakage test pressure and coat with a soap solution to locate leaks. Mark leak areas. Rinse preserver with fresh water, air dry and repair in accordance with paragraph 26-63.

9. Deflate preserver in accordance with paragraph 26-38.

Table 26-5. Barometric Pressure Conversion Chart

Press. Diff. (inHG)	Corr. (psi)	Press. Diff. (inHG)	Corr. (psi)	Press. Diff. (inHG)	Corr. (psi)	Press. Diff. (inHG)	Corr. (psi)	Press. Diff. (inHG)	Corr. (psi)
0.01	0.005	0.16	0.078	0.31	0.152	0.46	0.225	0.61	0.299
0.02	0.010	0.17	0.083	0.32	0.157	0.47	0.230	0.62	0.304
0.03	0.015	0.18	0.088	0.33	0.162	0.48	0.235	0.63	0.309
0.04	0.020	0.19	0.093	0.34	0.167	0.49	0.240	0.64	0.314
0.05	0.025	0.20	0.098	0.35	0.172	0.50	0.245	0.65	0.319
0.06	0.030	0.21	0.103	0.36	0.176	0.51	0.250	0.66	0.323
0.07	0.035	0.22	0.108	0.37	0.181	0.52	0.254	0.67	0.328
0.08	0.040	0.23	0.113	0.38	0.186	0.53	0.260	0.68	0.333
0.09	0.045	0.24	0.118	0.39	0.191	0.54	0.265	0.69	0.338
0.10	0.049	0.25	0.123	0.40	0.196	0.55	0.270	0.70	0.343
0.11	0.054	0.26	0.127	0.41	0.201	0.56	0.275	0.71	0.348
0.12	0.060	0.27	0.132	0.42	0.206	0.57	0.279	0.72	0.353
0.13	0.064	0.28	0.137	0.43	0.211	0.58	0.284	0.73	0.358
0.14	0.069	0.29	0.142	0.44	0.216	0.59	0.289	0.74	0.363
0.15	0.073	0.30	0.147	0.45	0.221	0.60	0.294	0.75	0.368

Rise in pressure: add to gage reading.
Fall in pressure: subtract from gage reading.

10. Ensure that inflation valve lever is cocked. Install CO_2 cylinder in accordance with paragraph 26-54.

26-49. RECORDS UPDATING. Make necessary entries on appropriate form in accordance with OPNAVINST 4790.2 Series.

26-50. CLEANING AND SERVICING.

26-51. Cleaning and servicing consist of cleaning the life preserver, case, container and/or pouch, installation of the inflation valve protective covers and CO_2 cylinders and, when required, safety wiring of the inflation valve actuating lever.

26-52. CLEANING OF LIFE PRESERVER CASINGS/BLADDERS. To clean life preservers, machine washing is preferred on casings, containers, and pouches. Alternate method is by hand. Remove any survival items and other detachable items and proceed as follows:

Materials Required

Quantity	Description	Reference Number
As Required	Detergent, General Purpose	MIL-D-16791 NIIN 00-282-9699
As Required	Cloth, Lint-Free, Type II	MIL-C-85043 NIIN 00-044-9281
As Required	Talc, Technical	MIL-T-50036A NIIN 01-080-9589

CAUTION

Solvents are not to be used in cleaning life preservers.

1. Prepare solution of detergent (MIL-D-16791) consisting of 1/4 to 1/2 ounce of detergent per gallon of water.

2. Apply cleaning solution to soiled area with a spray or sponge.

3. Allow solution to remain on surface for several minutes, then agitate with a soft brush or rag.

4. Rinse surface thoroughly with water; wipe with a cloth or sponge. Repeat this application until surface is free from all solution.

5. Dry casing before use and dry bladder with a lint-free cloth (MIL-C-85043). Apply a light coating of talc (MIL-T-50036A).

26-53. INSTALLATION OF INFLATION VALVE PROTECTIVE COVERS. To install inflation valve protective covers, proceed as follows:

1. Open life preserver flotation assembly, then position on a flat surface.

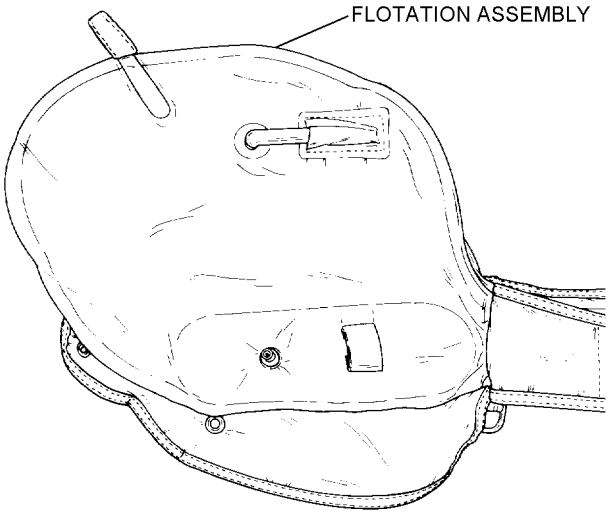

Z0053001

Step 1 - Para 26-53

2. Place inflation valve protective cover upon the life preserver. Ensure that inlet manifold stem hole and CO_2 cylinder holding loop hole are aligned according to figure 26-4.

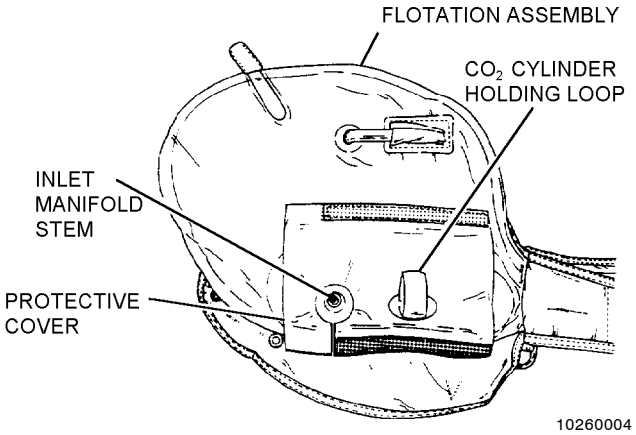

Figure 26-4. Installation of Inflation Valve Protective Cover

26-54. INSTALLATION OF CO_2 CYLINDERS. To install CO_2 cylinders, proceed as follows:

Support Equipment Required

Quantity	Description	Reference Number
1	Scale (Gram)	A-A-52021-1 NIIN 00-514-4117 or equivalent
1	Die, Cylinder Thread Chaser	1842-008-01 (CAGE 03688) NIIN 00-069-4040

Materials Required

Quantity	Description	Reference Number
1	Valve Stem and Seat Seal Kit (Note 1)	105AS100-5 (CAGE 30003) NIIN 00-498-6964

Notes: 1. Seat Seal is obtained from Valve Stem and Seat Seal Kit, P/N 105AS100-5, NIIN 00-498-6964, which contains two top, two bottom, and two seat seal gaskets.

NOTE

Weight of charged cylinder will vary according to manufacturer.

1. Weigh a charged cylinder and compare the minimum stamped weight with the scale weight. Discard and replace cylinder if scale weight is 2 grams less than minimum stamped weight.

2. Each inflation assembly consists of an inflator (MIL-I-25370, Type II, NIIN 00-561-0094), and a CO_2 cylinder (MIL-C-25369, Type III, NIIN 01-077-8773).

3. Remove and discard inflator setscrew(s) if installed. Ensure that inflator lever is in a cocked position.

CAUTION

Steel threads on CO_2 cylinder can cause damage to aluminum threads on inflator if cylinder is not carefully threaded. If binding occurs during installation of cylinder, use thread chaser dye on cylinder thread to cut free excessive plating. Reinstall cylinder. If binding still occurs, replace cylinder.

4. To assure a firm cylinder seat, conduct a cylinder thread count. Threaded portion of cylinder neck shall contain a minimum of seven full threads to assure a firm cylinder seat within valve body. Any cylinder found with less than seven full threads shall be discarded. See figure 26-5.

5. After performing functional test, insert a new seat seal gasket. At intermediate inspection intervals, inspect condition of gasket and replace if necessary.

6. Install CO_2 cylinder into inflator body as far as hand twisting will permit.

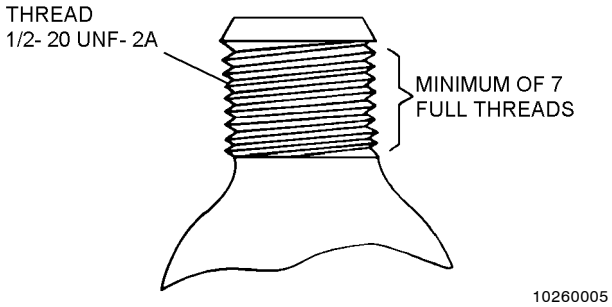

Figure 26-5. Cylinder Thread Count

NOTE

When replacing CO_2 cylinder to inflator, ensure that CO_2 cylinder passes through the holding patch loop.

Do not install setscrews in LPU-21C(V)1/P life preservers.

7. Close inflation valve protective covers; then secure with hook and pile tape provided. See figure 26-4.

26-55. REPAIR/REPLACEMENT.

26-56. This section contains instructions for the repair or modification of various components or subassemblies of life preservers to ensure that appropriate items of equipment remain in Ready For Issue (RFI) status. Reference numbers for parts which are defective, corroded or worn and require replacement are included in the applicable paragraph of this section. Other replacement parts, such as carrying cases and personal survival equipment, are listed in the applicable table of each chapter. Procedures are applicable to the type life preserver described in parentheses following the title of the repair or modification, or before a step.

26-57. Replacement of easily removed assembly components such as CO_2 inflation valves and survival items are authorized in addition to repair and replacement procedures documented in this section. The life preserver shall be subjected to a functional and leakage test each time CO_2 inflation valves are removed and replaced for any reason, and each time inflation valve gaskets are replaced.

26-58. DETERMINATION OF REPAIRABILITY. Patching of holes, cuts, tears or punctures 1-inch square or less are the only repairs authorized in a life preserver bladder.

26-59. Life preserver shall be considered beyond repair for any of the following reasons:

1. Porous fabric areas on flotation bladder.

2. Split or open bladder seams.

3. Leakage test failure resulting from other than repairable cut, tear or puncture.

4. Holes, cuts, tears or punctures within 1-inch of flotation bladder seams.

5. Deterioration of the rubberized fabric caused by oil, grease, or any other foreign substance.

6. Deterioration of the rubberized fabric caused by a heavily mildewed condition.

26-60. CASING REPAIR PROCEDURES. To repair casings, proceed as follows:

Materials Required

Quantity	Description	Reference Number
As Required	Thread, Nylon, High Temperature Resistant, Sage Green	MIL-T-83193 NIIN 00-405-2252
	-or-	
As Required	Thread, Nylon, Type II, Size E, Sage Green	V-T-295 NIIN 00-204-3884
As Required	Cloth, Aramid, Non-melting, Type 456, Class I, Sage Green	MIL-C-83429 NIIN 01-147-2064
As Required	Tape, Hook, Type II Sage Green,	MIL-F-21840 NIIN 00-405-2266
As Required	Tape, Pile, Type II Sage Green,	MIL-F-21840 NIIN 00-405-2263

1. Minor holes, rips, tears, or abrasions in casing assembly may be repaired if they do not exceed 2 inches.

2. Repair or replace loose or damaged hook and pile tape as required.

3. Remove bladder in areas being repaired.

4. For all repairs plus loose or broken stitching use 6 to 8 stitches per inch and back stitch one half inch.

5. Casing assembly worn beyond economical repair shall be discarded.

26-61. CASING GROMMET REPLACEMENT PROCEDURES. To replace casing grommet, proceed as follows:

Support Equipment Required

Quantity	Description	Reference Number
1	Punch, Cutting, 3/16″	3GGG-P-833 NIIN 00-180-0941
1	Pencil, Solder	W-S-570 NIIN 00-204-3855

Materials Required

Quantity	Description	Reference Number
1″	Tape, Nylon, Sage Green, 1″ Wide	MIL-T-5038 NIIN 00-753-6144
	-or-	
1 1/2″ X 1 1/2″	Cloth, Aramid, Sage Green, Type 456, Class I	MIL-C-83429 NIIN 01-147-2064
2	Grommet, Brass, Size 00	MS20230B20 NIIN 00-291-0302

1. Remove bladder in areas being repaired.

2. Remove loose grommet.

3. Reinforce worn grommet hole in casing by using either nylon tape or aramid cloth.

a. Prepare reinforcing material.

(1) Cut and sear edges of a 1″ piece of nylon tape

or

(2) Cut a 1 1/2″ X 1 1/2″ piece of aramid cloth and fold under 1/4″ on all edges.

b. Sew reinforcing material to outside of casing, centered where possible over original grommet location. Use a cross boxstitch with 6 to 8 stitches per inch, 1/8 inch from edge.

4. Install new grommet.

a. Locate original grommet hole. Cut hole in reinforcing material using 3/16″ cutting punch.

b. (For nylon tape only.) Carefully sear hole to prevent fraying using solder pencil.

c. Install grommet and washer using 00 grommet setter and base.

26-62. CEMENTING LIFE PRESERVERS. All cementing of life preservers shall be performed as follows:

NOTE

Toluene shall be the primary solvent used in the fabrication or repair of this assembly. MEK may be used if toluene is not available. Always use sparingly and wipe up excess solvents; do not allow to dry by evaporation.

Support Equipment Required

Quantity	Description	Reference Number
1	Roller, Wooden	GGG-R-00620 NIIN 00-243-9401

Materials Required

Quantity	Description	Reference Number
1	Brush, Disposable	NIIN 00-514-2417
As Required	Toluene	TT-T-548 NIIN 00-281-2002
	-or-	
As Required	Methyl Ethyl Ketone (MEK)	TT-M-261 NIIN 00-281-2762
As Required	Cement, Polychloroprene	MIL-A-5540 NIIN 00-142-9913
As Required	Talc, Technical	MIL-T-50036A NIIN 01-089-9589

WARNING

Do not use toluene or MEK near open flame, heat or electrical sparks. Avoid prolonged contact with skin or breathing of fumes. Use only in a well ventilated area.

CAUTION

Use only Polychloroprene adhesives and Polychloroprene-coated cloth and patches on Polychloroprene-coated LPU-21C(V)1/P life preserver assemblies.

NOTE

Toluene or MEK must be applied vigorously to life preserver material over three years old in order to reactivate the material prior to cementing. Pigment from the material coloring staining a cloth rubbed over the treated surface will indicate the material has been reactivated. Cement shall be applied immediately after the surface has dried.

1. Clean both surfaces to be cemented with four applications of toluene or MEK. Apply toluene or MEK with back-and-forth strokes on the first and third applications, and one-way strokes on the second and fourth applications. Allow area to dry between applications.

CAUTION

The effective active period of adhesive mixture composed of polychloroprene and an accelerator is eight (8) hours. Do not use mixture if older than eight hours.

2. Prepare only enough mixture for 8 hours. Dispose of any remaining mixture.

3. Using a disposable brush, apply cement to completely cover surfaces to be cemented. Use long, one direction strokes and complete each surface before cement becomes tacky as the brush may pull tacky cement from the surface. Allow to dry for 10 minutes.

4. Apply a second coat of cement as in step 3. Use brush strokes perpendicular to the original direction.

5. When second coat of cement has become tacky, place pieces together. If cemented area has a cut or tear, butt edges of damage before applying patch. Roll out bubbles with a wooden roller.

6. Allow cement to cure a minimum of 48 hours.

7. Dust area with talc (MIL-T-50036A).

26-63. PATCHING LIFE PRESERVERS. Life preservers are not repairable if there are holes, cuts, tears, or punctures over one-inch square. Patching of life preservers shall be performed as follows:

CAUTION

Use only Polychloroprene adhesives and Polychloroprene-coated cloth and patches on Polychloroprene-coated LPU-21C(V)1/P life preserver assemblies.

Materials Required

Quantity	Description	Reference Number
As Required	Cloth, Nylon, Polychloroprene-coated, Type I, Sage Green	MIL-C-19002 NIIN 00-935-1759

NOTE

Select patch color as near as possible to color of life preserver being repaired.

1. Cut a rounded patch 1 inch larger than damage on all sides.

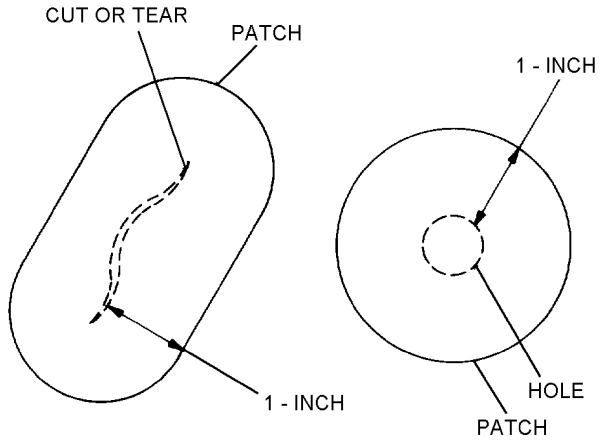

Z0063001

Step 1 - Para 26-63

2. Center patch over damage and trace an outline of patch on fabric.

3. Cement patch to damaged area in accordance with paragraph 26-62.

4. Dust area with talc (MIL-T-50036A).

5. Perform a leakage test.

26-64. INSPECTION RECORD PATCH.

NOTE

The 28th In-Service Management Panel meeting for Aviation Life Support Systems rescinded the requirement for the packer to sign the Inspection Record Patch on life preservers. The requirement for all other documentation remains unchanged. The reason for this change is that most history patches are unreadable and the packer's and inspector's names are documented on Aviation Crew Systems Records.

26-65. REPLACEMENT OF ORAL INFLATION VALVE. To replace the oral inflation valve, proceed as follows:

Figure 26-6 Deleted.

NOTE

Replacement of oral inflation valves can only be obtained through salvage of BCM'ed or surveyed inflatable survival equipment.

Materials Required

Quantity	Description	Reference Number
1	Valve, Oral Inflation	—
As Required	Cement, Polychloroprene	MIL-A-5540 NIIN 00-142-9913
As Required	Brush, Disposable	NIIN 00-514-2417
As Required	Toluene	TT-T-548 NIIN 00-281-2002
	-or-	
	Methyl Ethyl Ketone (MEK)	TT-M-261 NIIN 00-281-2762

CAUTION

Only toluene or MEK shall be used to clean oral inflation valve and tube. Only Polychloroprene cement (MIL-A-5540, NIIN 00-142-9913) shall be used to cement oral inflation valve into oral inflation tube.

1. Carefully cut through metal clamp securing oral inflation valve to oral inflation tube and remove metal band and oral inflation valve.

2. If the tip of the oral inflation tube was damaged during removal of valve, trim off damaged section.

3. Clean both surfaces to be cemented with toluene or MEK. Allow areas to dry.

4. Using a small disposable brush, carefully apply a small amount of Polychloroprene cement to the surfaces of the tube and the valve which are to be cemented together.

5. Immediately place oral inflation valve into oral inflation tube. Oral inflation valve should be inserted up to valve shoulder. Inspect for proper application/cement.

6. Tightly wrap the cemented portion of the oral inflation tube with cord or wire and allow to cure for 48 hours before removing wrap.

7. Perform leakage test in accordance with paragraph 26-46.

26-66. RECEMENTING OF BLADDER FIN SEAMS. This repair shall be performed only a flotation bladder does not leak, that is, if only outer seam around bladder is split or separating. To recement an open fin seam proceed as follows:

1. If fin seam is not leaking, recement open material surrounding flotation bladder in accordance with paragraph 26-62.

2. Perform a leakage test in accordance with paragraph 26-46.

NOTE

If bladder exhibits leakage from seam, bladder cell has ruptured. Dispose of life preserver after usable parts have been salvaged.

26-67. FABRICATION OF SLIP-ON POCKETS FOR LIFE PRESERVER HARDWARE. To fabricate slip-on pockets life preserver hardware, proceed as follows:

Materials Required

Quantity	Description	Reference Number
As Required	Cloth, Nylon, Polychloroprene-coated, Type I	MIL-C-19002 NIIN 00-935-1759
As Required	Thread, Nylon Size E	V-T-295 NIIN 00-204-3884

1. Cut two pieces of coated nylon cloth as shown.

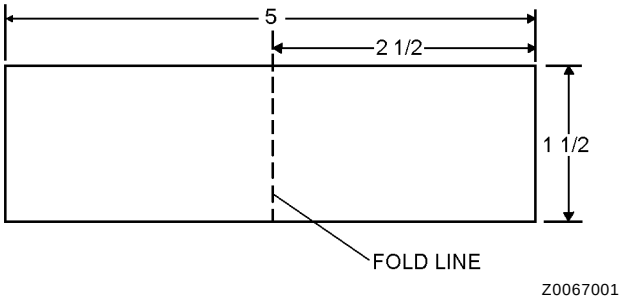

Step 1 - Para 26-67

2. Fold piece of cloth in half along fold line.

3. Sew two sides adjacent to fold forming a pocket. Use stitch type 301 stitching 8 to 10 stitches per inch.

4. Repeat steps 2 and 3 for other piece of cloth.

5. When packing life preserver, slip pockets over applicable pieces of hardware.

26-68. REPLACEMENT OF FLARE AND DYE MARKER POUCH SNAPHOOKS. To replace a broken snaphook, proceed as follows:

Materials Required

Quantity	Description	Reference Number
12 inches	Cord, Nylon, Type I	MIL-C-5040 NIIN 00-014-6699

1. Cut through ring portion of snaphook.

2. Remove snaphook and discard.

3. Pass end of cord through webbing loops on pouch and preserver ring.

4. Secure cord ends with binder knot, cut excess cord, and sear ends.

26-69. FLARE POUCH REPAIR. To repair flare pouch which will not close or is extremely difficult to close with flares installed, proceed as follows:

Materials Required

Quantity	Description	Reference Number
As Required	Thread, Nylon, Size E	V-T-295 NIIN 00-204-3884
2	Socket, Snap Fastener	MS27983-2 NIIN 00-945-2577
2	Cap, Snap Fastener	MS27983-1 NIIN 00-891-9073
3 1/2 inches	Webbing, Type VIII	MIL-W-4008

1. Remove both sets of sockets, caps, and pull tabs from pouch closure flap. Save pull tabs.

2. Position MIL-W-4008 Type VIII webbing on outside surface of pouch flap. Cut and sear webbing ends to match contour of flap end. Boxstitch webbing to flap using size E nylon thread (V-T-295). See figure 26-7.

3. Reposition both sets of sockets, caps, and pull tabs 3/8 inch closer to flap end. Use original pull tabs.

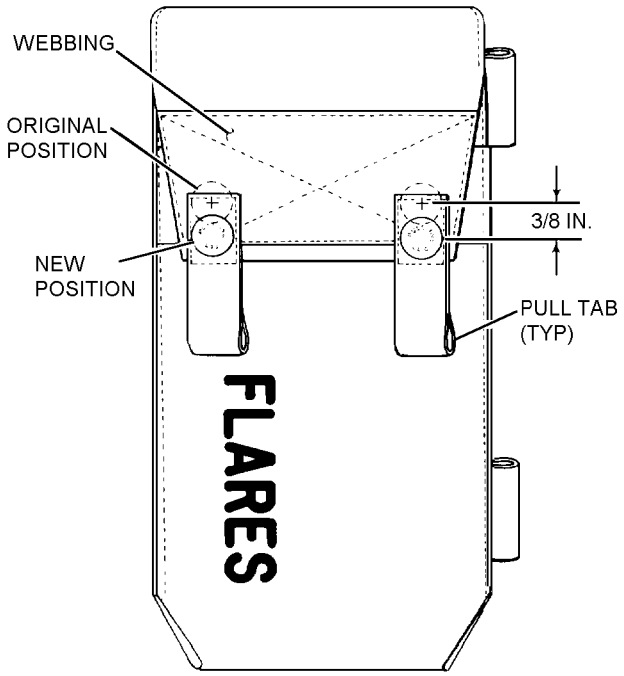

10260007

Figure 26-7. Flare Pouch Repair

26-70. DISASSEMBLY OF THE LIFE PRESERVER.

To disassemble the life preserver for bladder or case repairs, proceed as follows:

NOTE

Life preserver shall be disassembled only to the extent necessary to perform required maintenance or inspection.

The uni-directional snap fastener socket is installed with the dot on its button oriented to the side of the fastener on which lift must be applied to disengage socket from the snap fastener stud.

1. Open casing and remove both inflation assemblies.

2. Disengage uni-directional snap fasteners securing waist lobes to casing by applying lift on the dot-side snap fastener buttons.

3. Disengage collar lobe from casing by inserting finger under casing between the two uni-directional snap fastener buttons and apply lift.

4. Reattach cap nuts to valve stems.

5. Release all hook and pile tape fasteners.

6. Fold collar lobe and waist lobes to width of casing.

7. Hold casing at collar and pull flotation assembly down and out of casing, one lobe at a time.

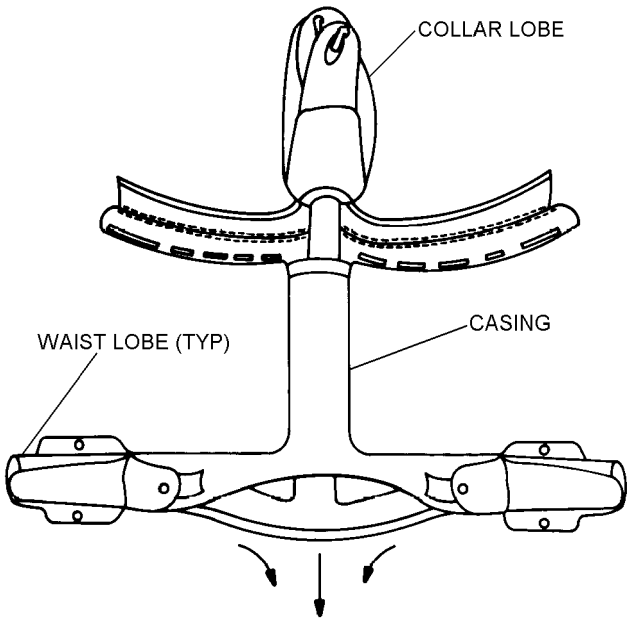

Z0070007

Step 7 - Para 26-70

26-71. REASSEMBLY OF THE LIFE PRESERVER. To reassemble the life preserver proceed as follows:

Materials Required

Quantity	Description	Reference Number
1	Valve Stem and Seat Seal Kit (Note 1)	105AS100-5 (CAGE 30003) NIIN 00-498-6964

Notes: 1. Valve Stem and Seat Seal Kit, P/N 105AS100-5, NIIN 00-498-6964, contains two top, two bottom, and two seat seal gaskets.

CAUTION

Ensure flotation assembly is not twisted in casing channels.

1. Roll collar lobes of flotation assembly together to form compact rod-like configuration and insert into base of back channel of casing. While holding lobes in roll configuration, work them through casing back channel. Next, insert waist lobes through casing waist channels.

2. When flotation assembly is in casing assembly, ensure that it is in proper configuration and is not twisted inside casing.

3. Align uni-directional snap fastener studs on each collar lobe with snap fastener sockets of casing assembly and secure snap fasteners.

NOTE

For ease of operation, insert one side of snap fastener stud into the socket on the side opposite the dot on the button, and press to engage.

4. Align uni-directional snap fastener sockets of flotation assembly waist lobe attachment patch with snap fastener studs of casing assembly and secure waist lobes to casing assembly.

5. Remove old inflation gaskets and replace with new gaskets. Reinstall inflation assemblies and protective covers. Pack life preserver in accordance with paragraph 26-85.

26-72. REPLACEMENT OF BEADED INFLATION HANDLE ASSEMBLY. To replace the beaded inflation handle, proceed as follows:

Materials Required

Quantity	Description	Reference Number
As Required	Handle, Beaded, Inflation	975AS121-11 NIIN 01-120-4752 (CAGE 30003)
As Required	Thread, Nylon, Size E	V-T-295 NIIN 00-204-3884

1. Open snap fastener on locking pin cover; then cut and remove safety tie securing eye of locking pin to retaining loop. Carefully remove locking pin from pin keeper and retaining loop.

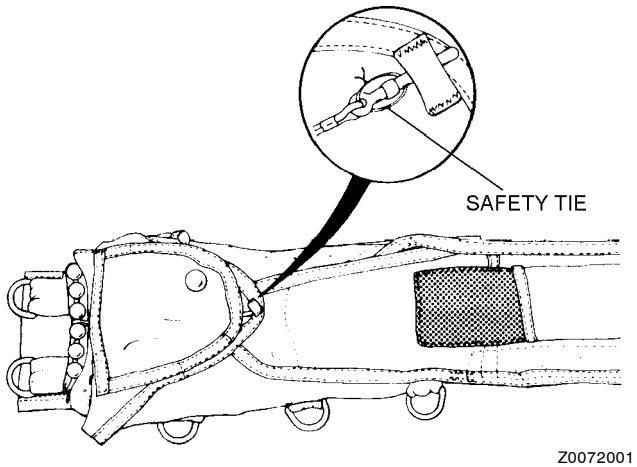

Step 1 - Para 26-72

2. Open flaps and unfold life preserver assembly.

3. Remove CO_2 cylinder and seat seal gasket from CO_2 inflator assembly. Retain CO_2 cylinder and seat seal gasket for reinstallation.

4. Remove inflation lanyard from inflator assembly; then unsnap beaded inflation handle from life preserver casing.

5. Secure new beaded handle inflation lanyard to actuating lever by passing lanyard through grommet in bottom casing flap and through hole in end of actuating lever. Pass lanyard back through grommet in bottom casing flap and form lark's head knot.

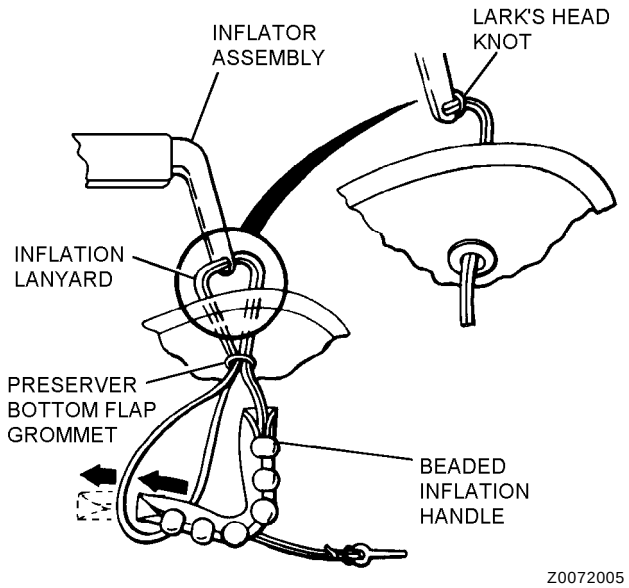

Step 5 - Para 26-72

6. Fasten beaded inflation handle to casing with snap fasteners provided; then safety-tie beaded inflation handle with one turn of size E nylon thread, single. Draw thread sufficiently to permit 1/2-inch ± 1/8-inch space between the middle beads and webbing on the preserver. Tie ends of both safety ties with a surgeon's knot followed by a square knot.

NOTE

Ensure that overhand knot on locking pin lanyard is within 3/4 inch from eye of pin.

7. Route locking pin under outboard flap cover panel and through No. 3 spur grommet.

NOTE

On some late issue LPU-21D/P casings, the No. 3 spur grommet has been deleted.

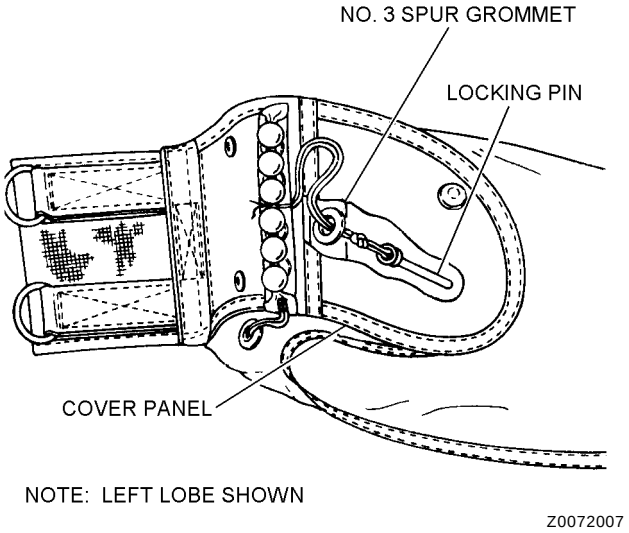

Step 7 - Para 26-72

8. Route the locking pin under the locking pin cover flap through the opening in the stitching at the base of the flap, through the retaining loop/packaging cord loop, and under the pin keeper loop.

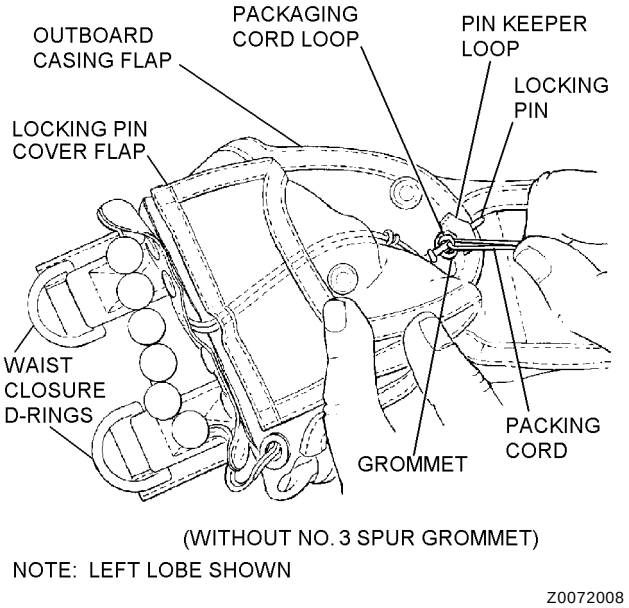

Step 8 - Para 26-72

9. Perform beaded inflation handle pull test. Refer to paragraph 26-47.

10. Recock CO_2 inflator and install seat seal gasket and CO_2 cylinder.

NOTE

Ensure that all hook and pile tapes are securely mated.

11. Pack life preserver according to procedures outlined in paragraph 26-85.

12. Make necessary entries on appropriate form in accordance with OPNAVINST 4790.2 Series.

26-73. REPAIR OF CORRODED CO_2 INFLATION VALVE MIL-I-23145. To repair CO_2 inflation valve, proceed as follows:

Materials Required

Quantity	Description	Reference Number
As Required	Lubricant, Silicone	DC7 (CAGE 71984) NIIN 00-995-0712
1	Valve Stem and Seat Seal Kit (Note 1)	105AS100-5 (CAGE 30003) NIIN 00-498-6964
As Required	Cloth, Emery No. 240	—
1	Valve, Inflation	MIL-I-23145 Type II NIIN 00-941-1922
As required	Abrasive Mat	MIL-A-9962 NIIN 00-967-5093

Materials Required (Cont)

Quantity	Description	Reference Number
As Required	Corrosion Preventative Compound, (Amiguard) Type I	MIL-C-85054 NIIN 01-041-1596

Notes: 1. Valve Stem and Seat Seal Kit, P/N 105AS100-5, NIIN 00-498-6964, contains two top, two bottom, and two seat seal gaskets.

1. Remove CO_2 cylinder from valve.

2. Remove inflation valve from preserver. Discard two gaskets on valve stem.

3. Remove grooved taper pin (retaining lever) from inflation valve, using awl and mallet. See figure 26-8.

4. Remove lever, spring, and piercing pin. If spring is broken or corroded, replace entire valve.

5. If piercing pin or actuating lever is corroded, remove corrosion with abrasive mat. If abrasive mat is ineffective, use 240 grit emery cloth. Do not damage O-ring on piercing pin. Wipe off any dirt or moisture from actuating lever and apply a thin coat of MIL-C-85054 and allow to dry.

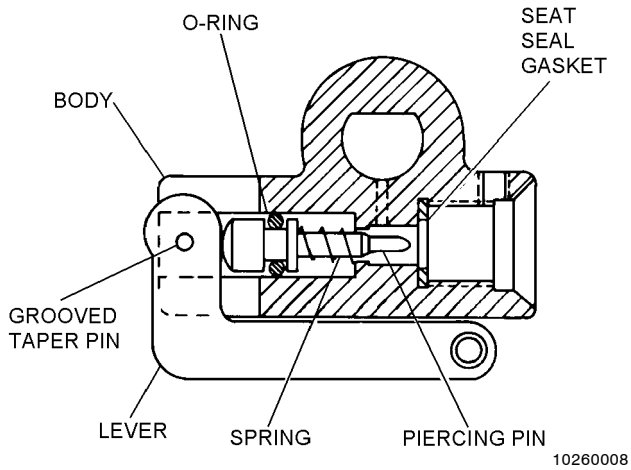

Figure 26-8. CO_2 Inflation Assembly

6. Clean residue from actuating lever on piercing pin. Lightly coat base of piercing pin with silicone lubricant.

7. Reassemble inflation valve and operate actuating lever three or four times. Ensure that lever and piercing pin move freely.

8. If piercing pin and lever do not move freely, obtain replacement valve.

9. Reinstall inflation valve on life preserver using new gaskets from kit.

CAUTION

Valve stem may rotate if cap nut is over torqued.

10. Install cap nut onto valve stem and torque to a value of 8 ±1 in-lb.

11. Reinstall new seat seal gasket and CO_2 cylinder.

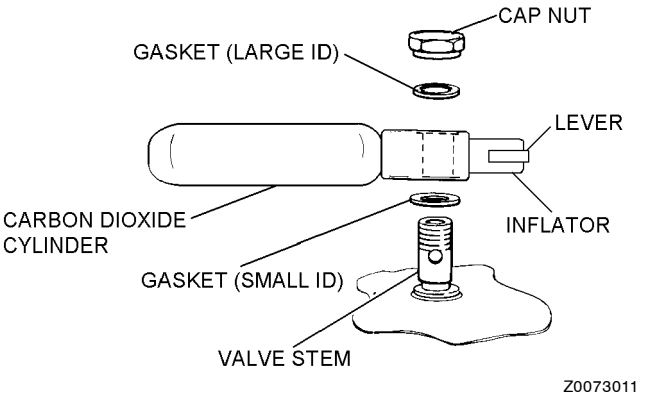

Step 11 - Para 26-73

26-74. REPLACEMENT OF TOP AND BOTTOM GASKETS. To replace the top and bottom gaskets on an inflator, proceed as follows:

Support Equipment Required

Quantity	Description	Reference Number
1	Wrench, 9/16-inch	—

Materials Required

Quantity	Description	Reference Number
1	Valve Stem and Seat Seal Kit (Note 1)	105AS100-5 (CAGE 30003) NIIN 00-498-6964

Notes: 1. Valve Stem and Seat Seal Kit, P/N 105AS100-5, NIIN 00-498-6964, contains two top, two bottom, and two seat seal gaskets.

1. Remove cap nut and top gasket from inflator.

WARNING

Ensure that gaskets are properly positioned. The top gasket has a larger internal diameter than the bottom gasket.

2. Remove inflator and replace bottom gasket.

3. Carefully place inflator onto valve stem.

4. Install top gasket onto valve stem.

CAUTION

Valve stem may rotate if cap nut is over torqued.

5. Tighten cap nut onto valve stem and torque to a value of 8 ±1 in-lb.

6. Perform functional and leakage tests on life preserver cell that was repaired. Refer to paragraphs 26-37 and 26-46.

26-75. REPLACEMENT OF CHECK VALVE ASSEMBLY. To replace a defective check valve assembly, proceed as follows:

Materials Required

Quantity	Description	Reference Number
1	Valve, Pneumatic Inflator (Check Valve Assembly) (Note 1)	Schrader-Bridgeport P/N 8457500047

Notes: 1. Schrader-Bridgeport P/N 8457500047 must be open purchased from:
Schrader-Bridgeport Intl
205 Frazier Rd
P.O. Box 668
Altivista, VA 24517
Phone (804) 369-8875

Support Equipment Required

Quantity	Description	Reference Number
1	Tool, Valve Core	8769A or equivalent (CAGE 27783) NIIN 01-354-5423
1	Wrench, Torque	—

1. If not available, fabricate a valve core tool as shown in Chapter 3.

2. Remove inflator cap nut.

3. Insert valve core tool and unscrew check valve from valve stem.

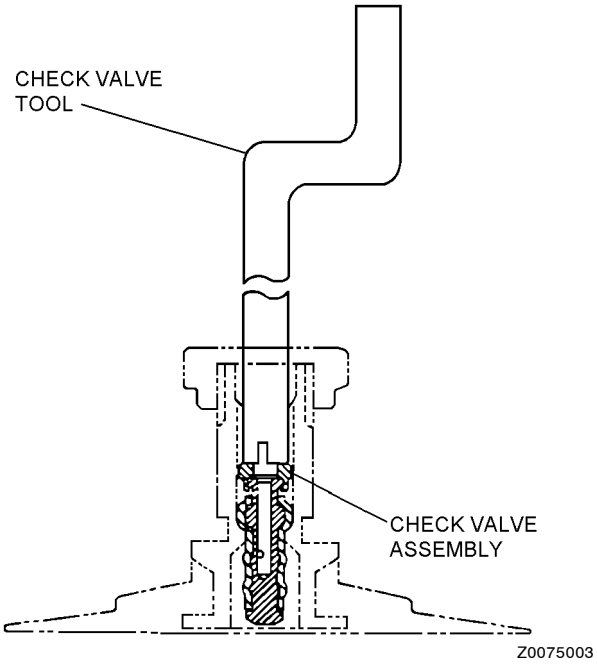

Step 3 - Para 26-75

4. Insert new check valve in valve stem and tighten with valve core tool hand tight.

CAUTION

Valve stem may rotate if cap nut is over torqued.

5. Replace cap nut and torque to a value of 8 ±1 in-lb.

6. Perform a functional and leakage test on life preserver cell that was repaired. Refer to paragraphs 26-37 and 26-46.

26-76. FABRICATION OF PROTECTIVE COVER ASSEMBLY. To fabricate a protective cover, proceed as follows:

Materials Required

Quantity	Description	Reference Number
17 x 6 inches	Cloth, Nylon, Polychloroprene-coated, Type I Sage Green	MIL-C-19002 NIIN 00-935-1759
12 x 5/8 inches	Fastener, Tape, Hook, Type II	MIL-F-21840
12 x 5/8 inches	Fastener, Tape, Pile, Type II	MIL-F-21840
As Required	Thread, Nylon, Type I or II, Size E	V-T-295 NIIN 00-204-3884

NOTE

Procedural step 1 is for a right protective cover and step 2 is for a left protective cover.

1. To fabricate a right protective cover, proceed as follows:

a. Cut an 8 1/2-inch length of cloth.

b. Cut a 6-inch length each of hook and pile tape and sew to the coated side of the cloth. Use stitch type 301 stitching 8 to 10 stitches per inch.

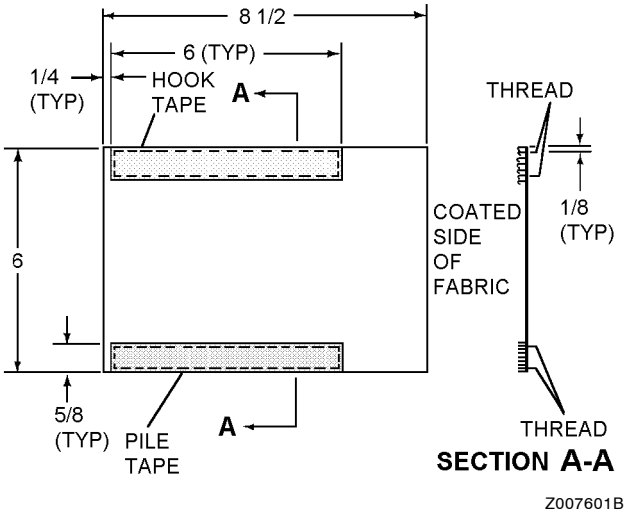

Step 1b - Para 26-76

c. Position coated, coated side up, over cutting board and punch a 1 7/16-inch diameter hole and a 1-inch diameter hole.

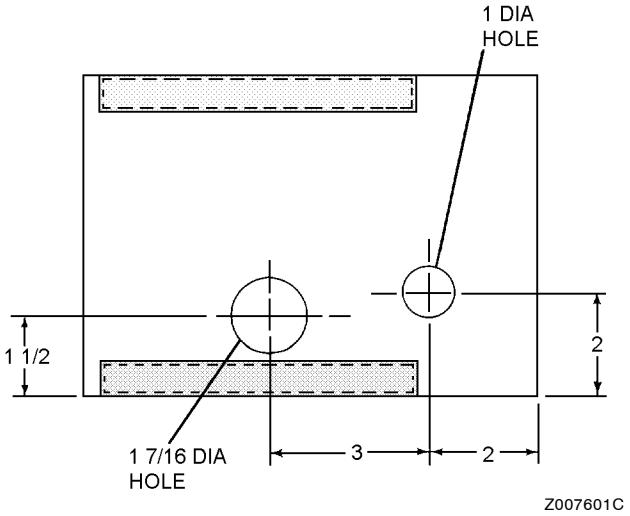

Step 1c - Para 26-76

d. Cut slit into cloth up to the 1-inch diameter hole.

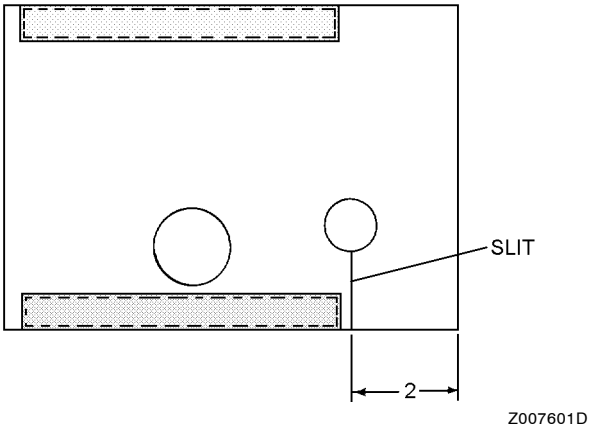

Step 1d - Para 26-76

2. To fabricate a left protective cover, proceed as follows:

a. Cut an 8 1/2-inch length of cloth.

b. Cut a 6-inch length each of hook and pile tape and sew to the coated side of the cloth.

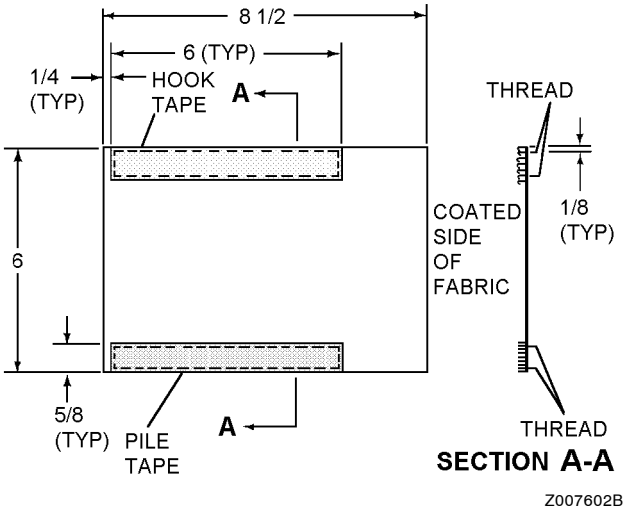

Step 2b - Para 26-76

c. Position cloth, coated side up, over cutting board and punch a 1 7/16-inch diameter hole and a 1-inch diameter hole.

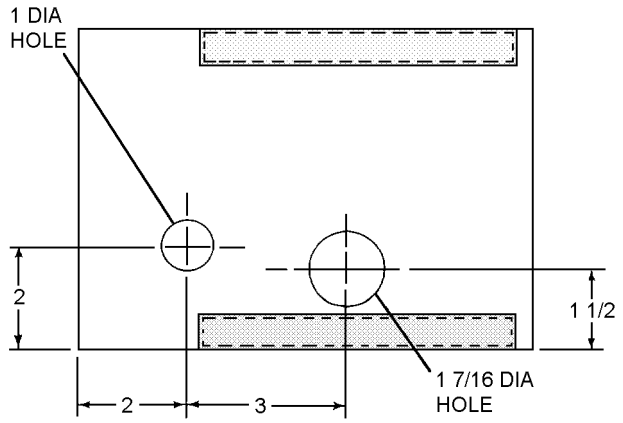

Step 2c - Para 26-76

d. Cut slit into cloth up to the 1-inch diameter hole.

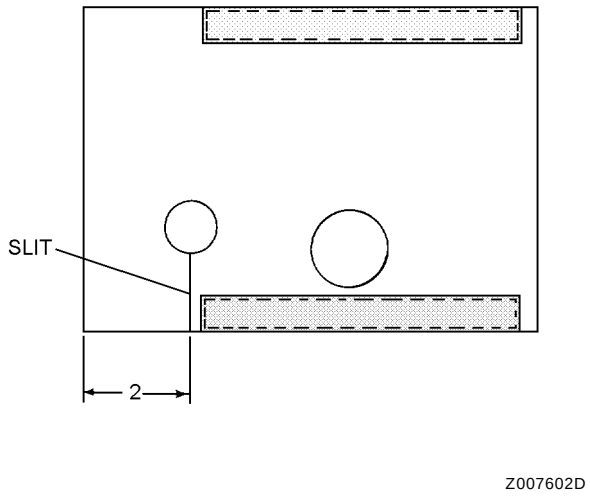

Step 2d - Para 26-76

26-77. FABRICATION OF COLLAR LOBE WEBBING LOOPS. To fabricate collar lobe webbing loops, proceed as follows:

Materials Required

Quantity	Description	Reference Number
18-inch Length	Webbing, Nylon, Type IV, 1-inch Width	MIL-T-5038 NIIN 00-261-8579 (CAGE 81349)
2	Post, Snap Fastener	MS27981-5B NIIN 00-250-6858 (CAGE 96906)
2	Stud, Snap Fastener	MS27981-4B NIIN 00-901-9660 (CAGE 96906)
2	Socket, Snap Fastener	M527981-3B NIIN 00-276-4966 (CAGE 96906)
2	Cap, Snap Fastener	M527981-1B NIIN 00-276-4954 (CAGE 96906)
As Required	Thread, Nylon Type II, Size E	V-T-295 NIIN 00-204-3884

NOTE

All stitching shall be 10 to 12 stitches per inch, size E nylon thread.

1. Cut two 9-inch lengths of 1-inch wide nylon webbing and sear ends.

2. Sew one piece of webbing to outer side of each collar lobe casing in accordance with dimensions shown in figure 26-9.

3. Position and install snap fasteners in accordance with dimensions shown in figure 26-9, and ensure proper mate.

26-78. FABRICATION AND INSTALLATION OF LOCKING PIN COVER (LIFE PRESERVERS WITHOUT NO. 3 SPUR GROMMET). Fabricate and install the locking pin cover as follows:

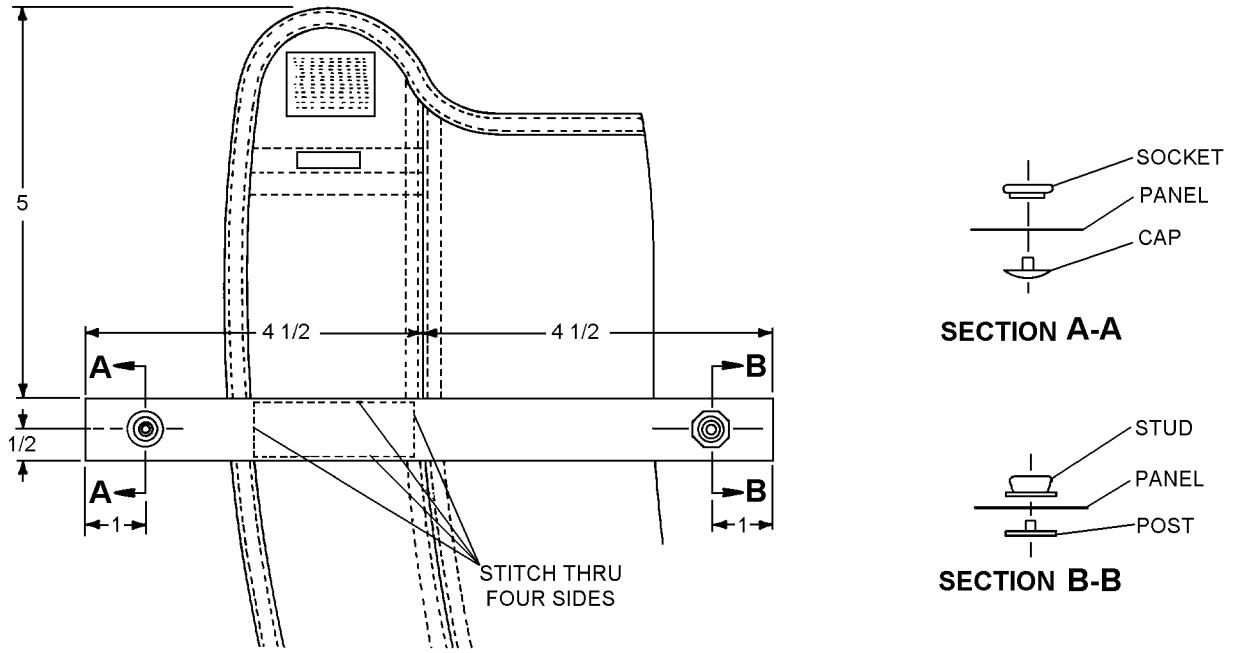

10260009

Figure 26-9. Addition of Webbing Loops

CAUTION

Only Polychloroprene adhesives and Polychloroprene-coated cloth patches shall be used on Polychloroprene-coated LPU-21C(V)1/P life preserver assemblies.

Materials Required

Quantity	Description	Reference Number
1	Socket, Snap Fastener	MS27981-3B NIIN 00-276-4966
1	Cap, Snap Fastener	MS27981-1B NIIN 00-276-4954
As Required	Cloth, Nylon, Polychloroprene-coated, Type I Sage Green	MIL-C-19002 NIIN 00-935-1759

Materials Required (Cont)

Quantity	Description	Reference Number
As Required	Thread, Stitching, Nylon, Type I or II, Size E	V-T-295 NIIN 00-204-3884
As Required	Tape, Binding, Nylon, 3/4-inch Wide, Sage Green 1551 Type III	MIL-T-5038 NIIN 00-176-8083

1. Cut basic locking pin cover from coated nylon cloth in dimensions shown in figure 26-10. Define form of locking pin cover using appropriate end of casing waist lobe assembly as pattern.

2. Reinforce fabric with single row stitching around entire perimeter of locking pin cover.

NOTE

Binding tape may be in one continuous strip or two sections.

3. Apply 3/4-inch binding tape to perimeter of cover as shown in figure 26-10.

4. Align locking pin cover with mating surface of casing assembly and install in accordance with figure 26-11.

5. Mark snap fastener alignment and install locking pin cover, snap fastener socket and cap.

NOTE

When properly aligned with casing assembly, the straight edge of locking pin cover will be butted 1/8-inch from edge of beaded inflation handle snap fastener stud installation (casing main panel subassembly).

26-79. REPLACEMENT OF COLLAR LOBE UNI-DIRECTIONAL SNAP FASTENERS AND WEBBING. Fabricate and install snap fasteners and shoulder strap webbing as follows:

Materials Required

Quantity	Description	Reference Number
As Required	Webbing, Nylon, Type IV, 1-inch Wide	MIL-T-5083 NIIN 00-261-8579
4	Socket, Snap Fastener	MS27983-2 NIIN 00-945-2577
4	Cap, Snap Fastener	MS27983-1 NIIN 00-891-9073
2	Loop, Slide	MS51940-3B
2	Hook, Snap	M43770/1-CWBCI
As Required	Thread, Nylon, Type I or II, Size E	V-T-295 NIIN 00-204-3884

1. Cut 14-inch length of nylon webbing and sear each end.

2. Form an inch long three-layer end-tab and sew a 3/4 inch long cross box stitch in accordance with figure 26-12.

3. Pass the free end through slide loop, then route through snap hook and back through slide loop. Ensure snap hook is facing proper direction.

4. Position free end of webbing on collar lobe casing and stitch in place as indicated.

NOTE

Ensure dots on caps of uni-directional snap fasteners are installed with dot-side of caps facing each other.

5. Install two uni-directional snap fastener sockets with dots on caps on the inside (facing) as shown in figure 26-12.

26-80. FABRICATION OF LPU-21C(V)1/P LIFE PRESERVER. To fabricate an LPU-21C(V)1/P, proceed as follows:

Materials Required

Quantity	Description	Reference Number
As Required	Ink, Marking, Laundry, Black	SPE-92 NIIN 00-161-4229

NOTE

Prior to beginning modification/fabrication procedures ensure the collar lobe snap hooks and patches and the old waist lobe attachment patches have been removed from the LPU-21C/P bladder assembly. All old cement should be removed for ease in cementing new bladder and snap fastener attachment patches.

1. Modify LPU-21C/P flotation assembly with the addition of waist lobe and collar lobe snap fasteners in accordance with paragraphs 26-81 through 26-84.

2. Using black waterproof ink, blackout existing type classification number on the inside of the life preserver casing. As closely as possible to the original number, stencil in the new number, LPU-21C(V)1/P, using black waterproof ink.

3. Assemble life preserver in accordance with procedures of paragraph 26-71.

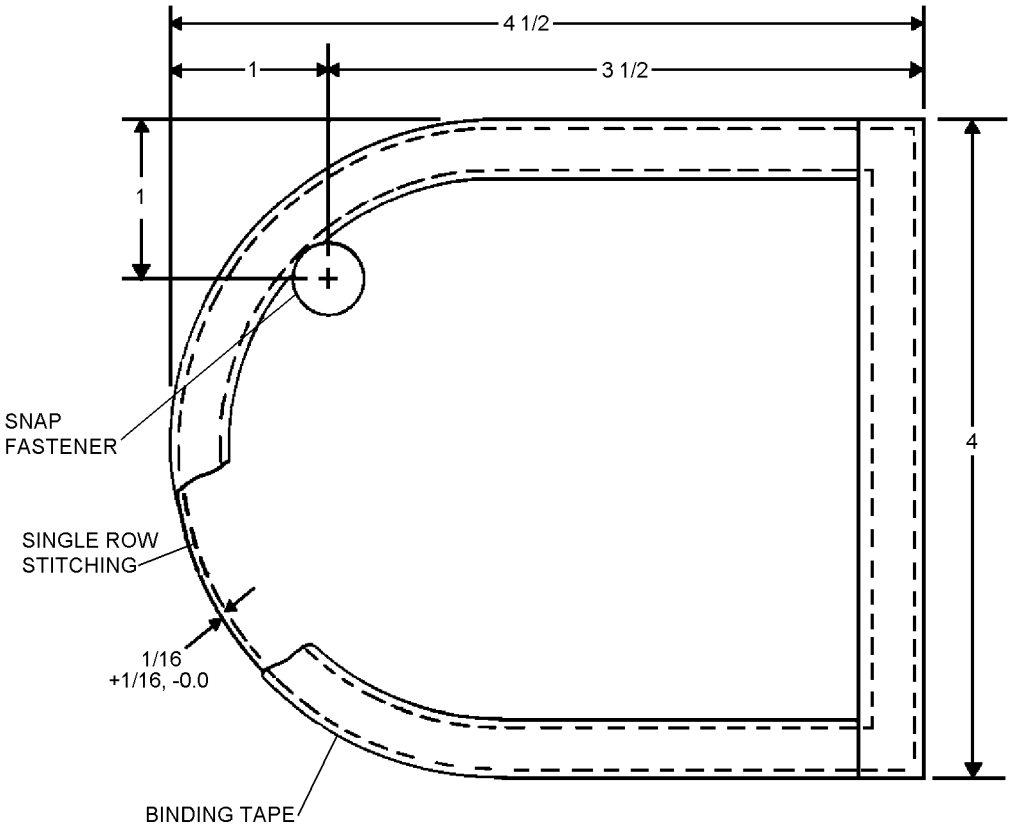

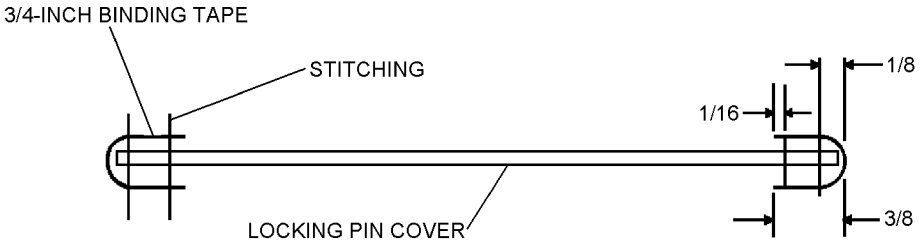

BINDING TAPE INSTALLATION

RIGHT HAND SHOWN - LEFT HAND OPPOSITE

10260010

Figure 26-10. Fabrication of Locking Pin Cover

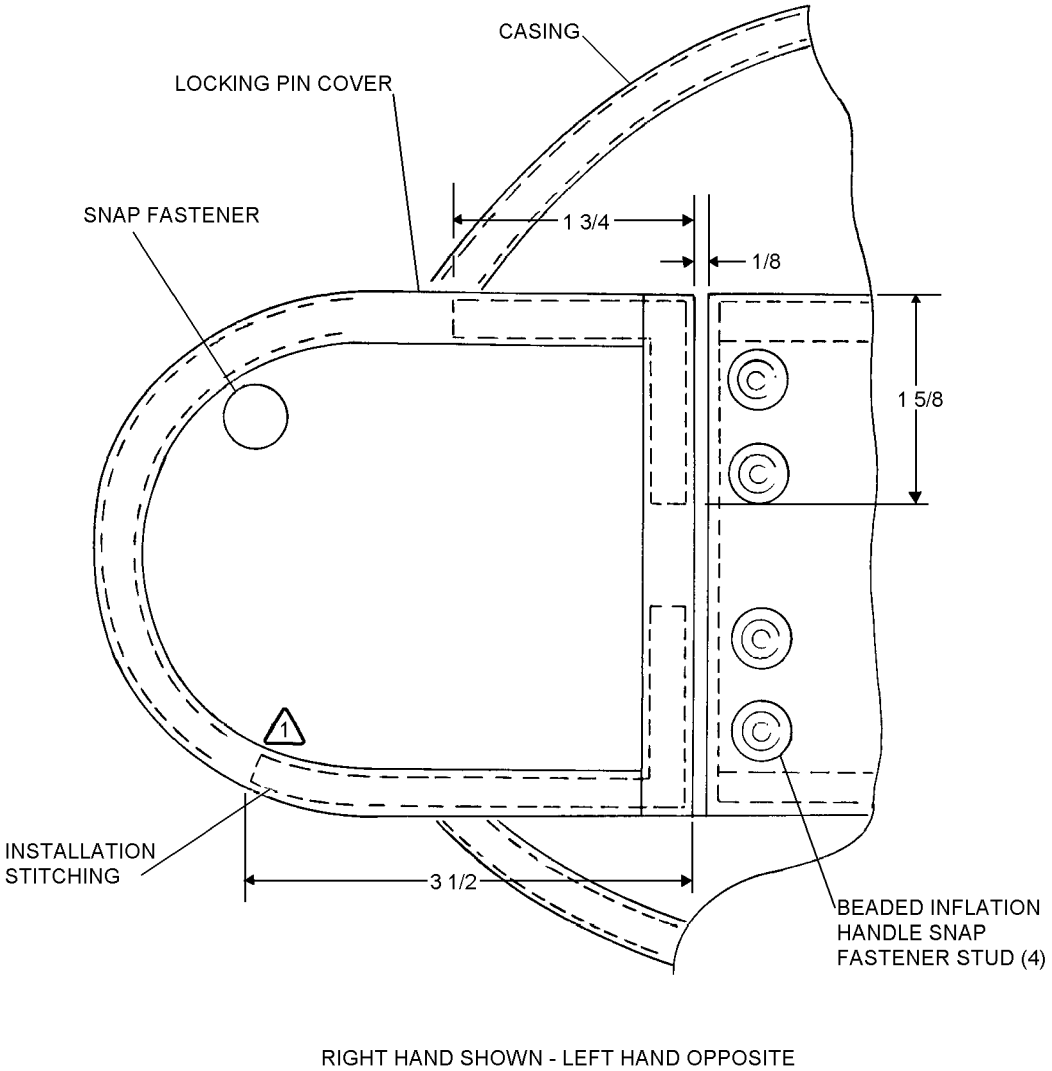

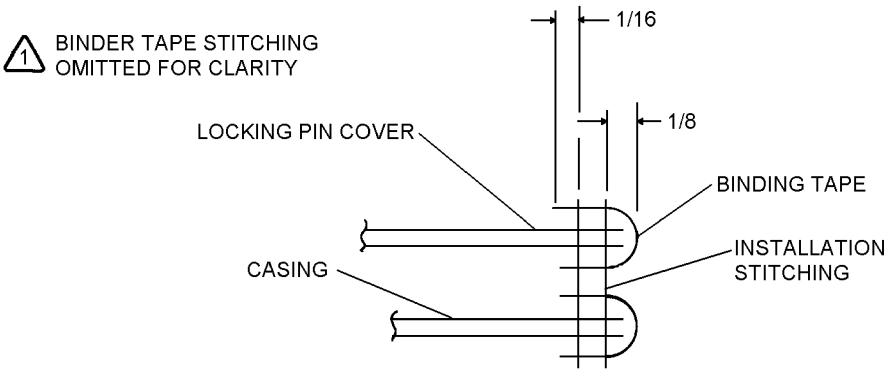

10260011

Figure 26-11. Locking Pin Cover Installation

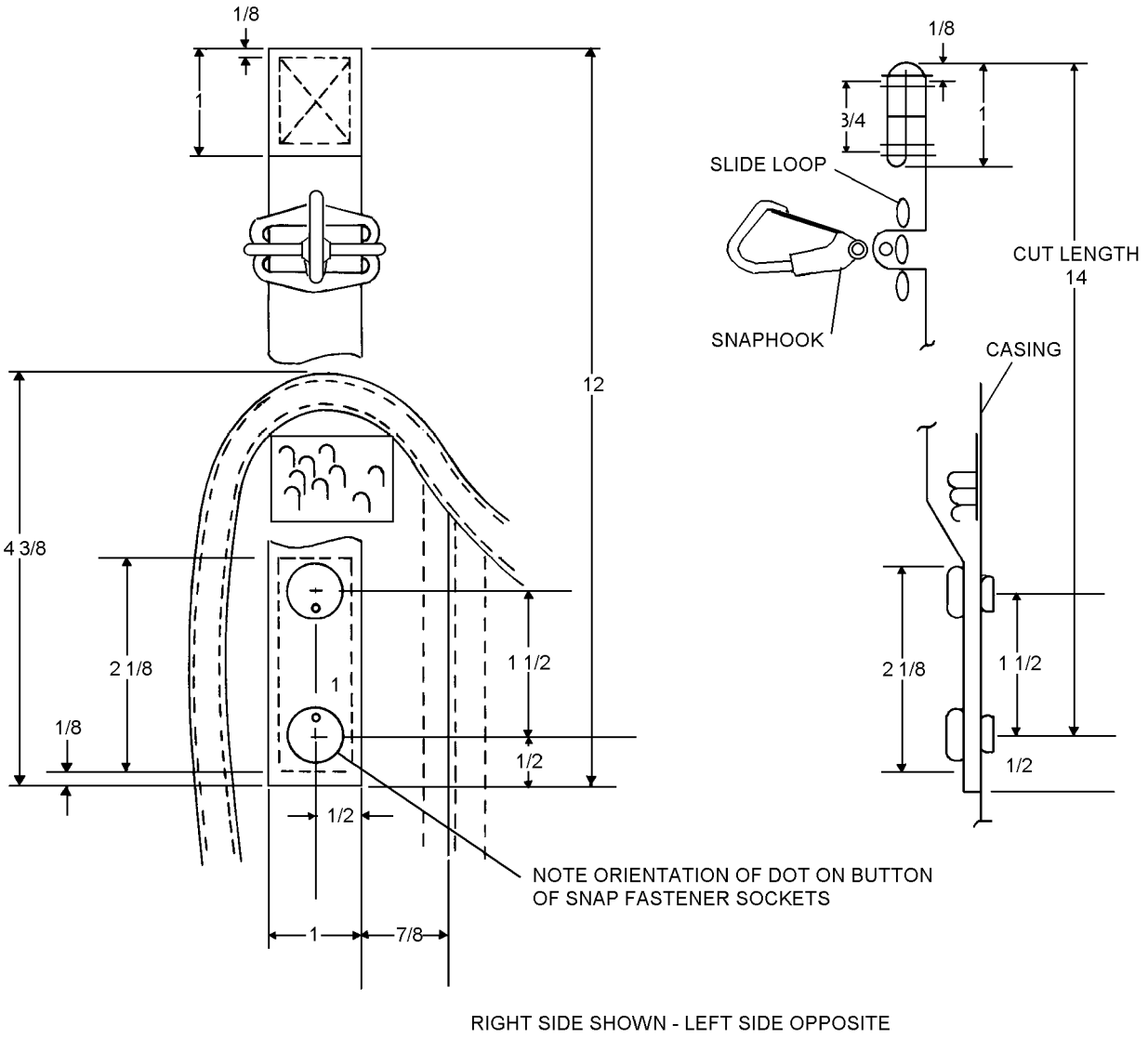

10260012

Figure 26-12. Collar Casing Shoulder Strap Fabrication and Installation

NOTE

The installation of an LPU-21D/P flotation assembly into an LPU-21C/P casing is not authorized.

26-81. FABRICATION AND INSTALLATION OF WAIST LOBE ATTACHMENT PATCH (LPU-21C(V)1/P). The following procedures pertain to the fabrication and installation of the left waist lobe attachment patch. These instructions are typical and apply to both left and right waist lobe installations (See Figure 26-13).

Support Equipment Required

Quantity	Description	Reference Number
1	Roller, Wooden	GGG-R-00620

Materials Required

Quantity	Description	Reference Number
12	Cap, Snap Fastener	MS27983-1 NIIN 00-891-9073
12	Socket, Snap Fastener	MS27983-2 NIIN 00-945-2577
12	Stud, Snap Fastener	MS27983-3 NIIN 00-276-4908
12	Post, Snap Fastener	MS27983-4 NIIN 00-276-4978
As Required	Cloth, Polychloroprene-coated	MIL-C-87187

CAUTION

Use only Polychloroprene adhesives and Polychloroprene-coated cloth patches on Polychloroprene-coated LPU-21C(V)1/P flotation assemblies.

26-82. Bladder Attachment Patch. Procedures for fabrication and installation of the bladder attachment patch are as follows:

1. Spread left waist lobe of deflated life preserver bladder on clean flat surface.

2. Fabricate attachment patch using polychloroprene-coated cloth.

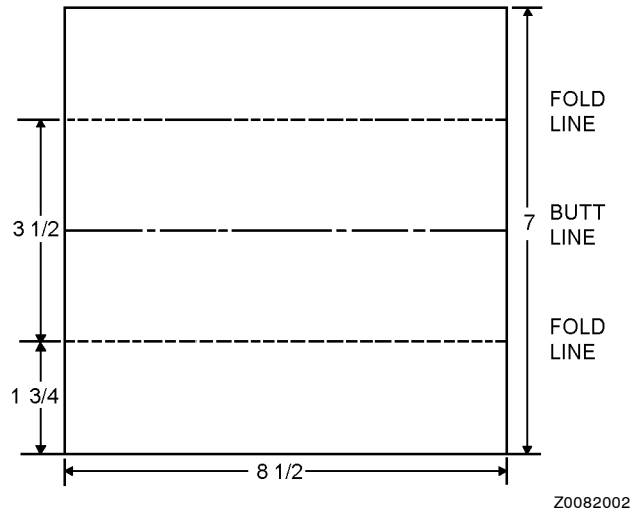

Step 2 - Para 26-82

3. Fold cloth at fold lines, with coated side inside, butt edges together at butt line to form attachment patch 8 1/2 inches by 3 1/2 inches. Crease edges at fold line.

4. Complete the basic attachment patch form by applying polychloroprene adhesive to coated side of the patch in accordance with paragraph 26-62. Fold and butt together edges as in step 3.

5. Cut two 8 1/2-inch x 2-inch lengths of polychloroprene-coated cloth. Fold each length in half, coated side out, to form 8 1/2-inch x 1-inch lengths. Roll fold line with wooden roller to form "V". Cement one length on each side of the attachment patch, open "V" to the outside. Follow cementing procedures in paragraph 26-62 using polychloroprene adhesive.

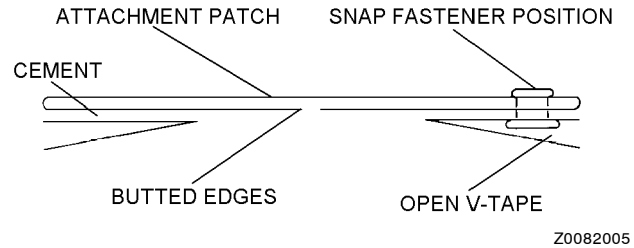

Step 5 - Para 26-82

6. Measure and punch six holes in attachment patch for installation of six uni-directional snap fastener sockets (figure 26-13).

7. Install six uni-directional snap fastener sockets with dots on caps oriented to center point of attachment patch (figure 26-13).

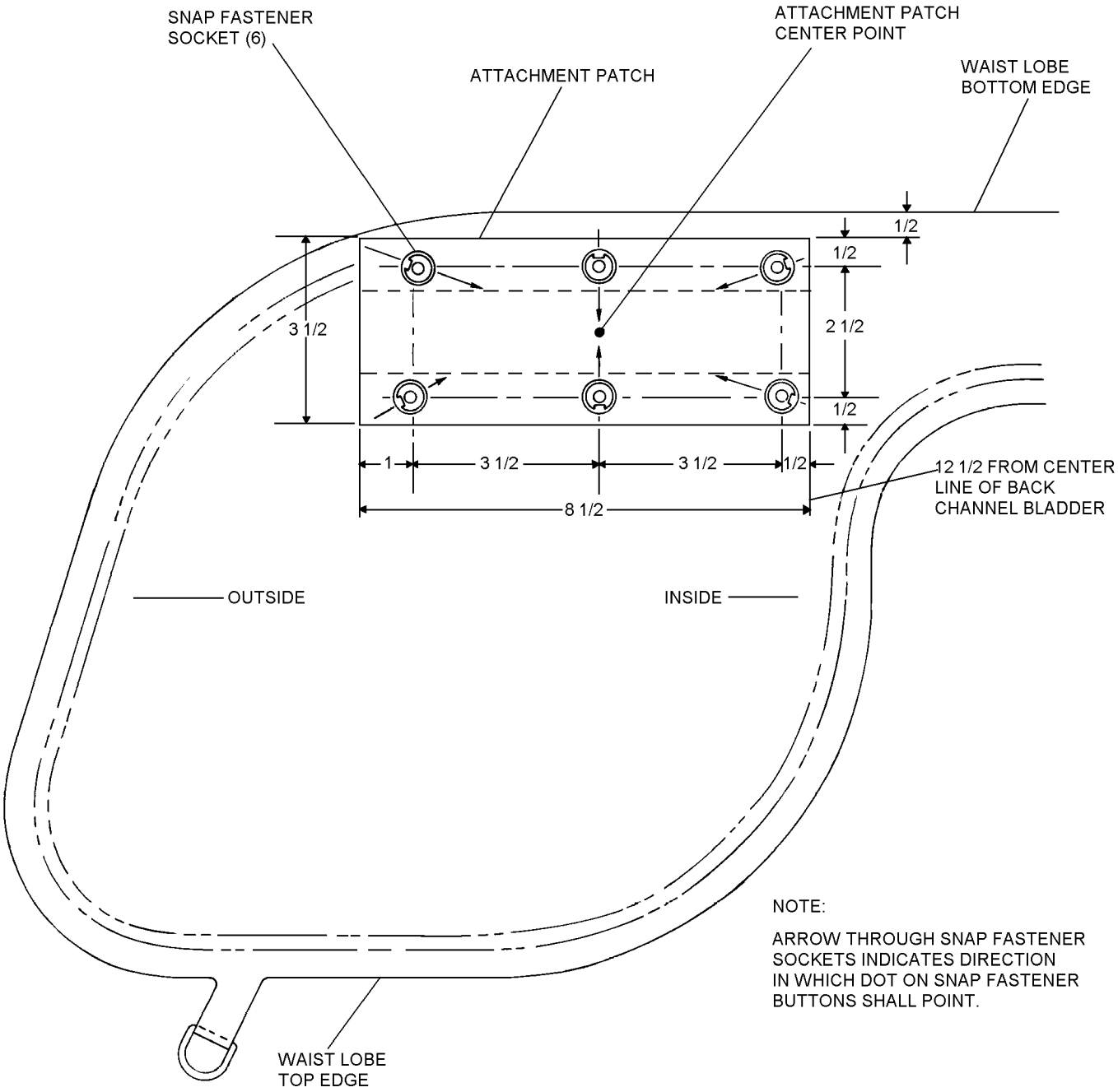

Figure 26-13. Bladder Attachment Installation Dimensions

8. Position attachment patch on bladder waist lobe as indicated in figure 26-13 and mark the area on waist lobe. Apply polychloroprene adhesive in accordance with paragraph 26-62 and attach the patch to bladder waist lobe.

26-83. Installation of Casing Attachment Patch Snap Fastener Studs. Install six uni-directional snap fastener studs in waist lobe casing as follows:

1. Spread casing assembly flat on clean level surface. Hold in flat non-distorted position using thumb tacks or other available means not harmful to fabric.

2. Measure and mark snap fastener positions using dimensions in figure 26-14. Remove restraints from casing.

3. Install six snap fastener studs and posts.

26-84. FABRICATION AND INSTALLATION OF COLLAR LOBE UNI-DIRECTIONAL SNAP FASTENER STUDS. Fabrication and installation of the bladder collar lobe snap fastener studs are typical of left and right sides. See figure 26-15. Proceed as follows:

CAUTION

Use only Polychloroprene adhesives and Polychloroprene-coated cloth patches on Polychloroprene-coated LPU-21C(V)1/P flotation assemblies.

Materials Required

Quantity	Description	Reference Number
As Required	Cloth, Nylon, Polychloroprene-coated, Type I, Sage Green	MIL-C-19002 NIIN 00-935-1759
2	Stud, Snap Fastener, Uni-directional	MS27983-3 NIIN 00-276-4908
2	Post, Snap Fastener	MS27983-4 NIIN 00-276-4978

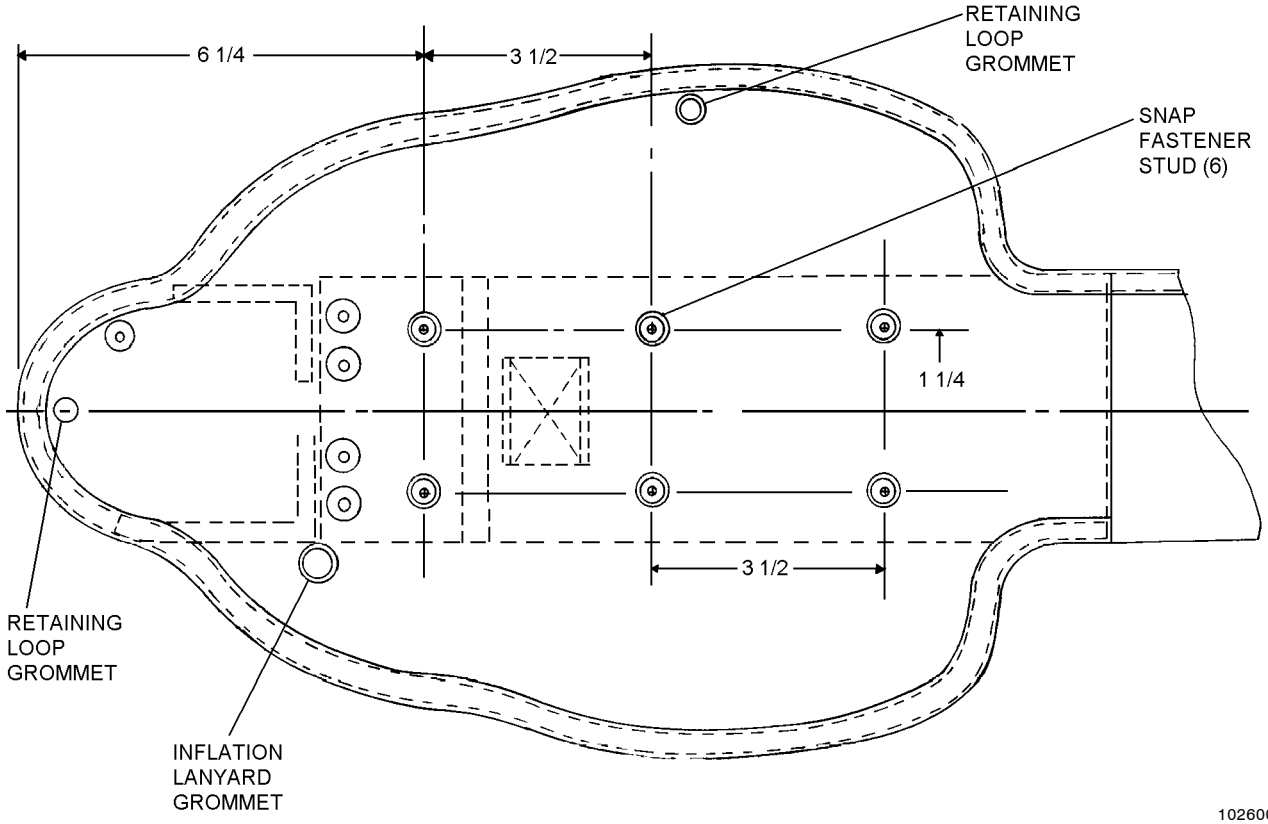

Figure 26-14. Installation Casing Attachment Patch Snap Fastener Studs

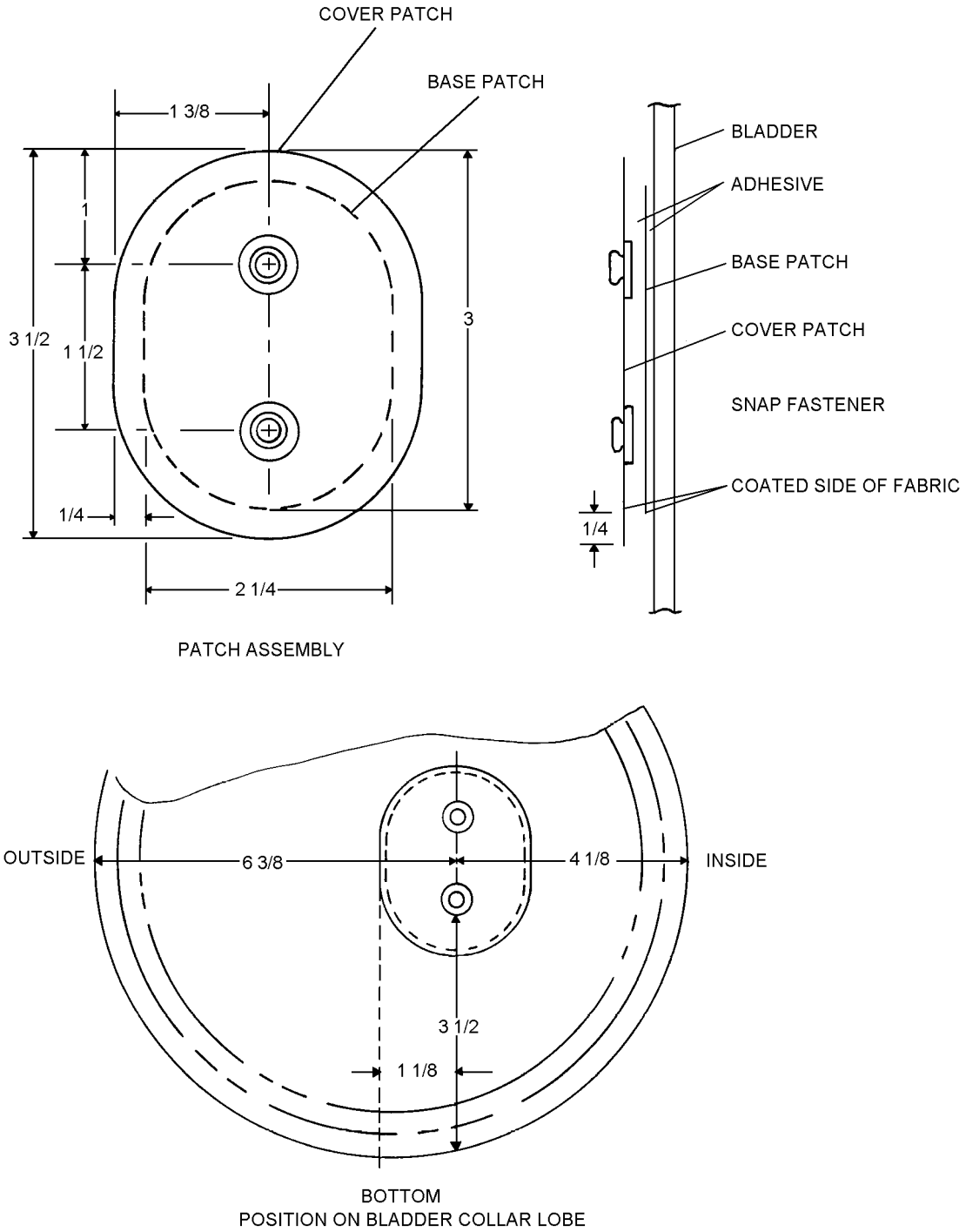

10260015

Figure 26-15. Bladder Collar Lobe Snap Fastener Studs

WARNING

Do not use toluene or MEK near open flame, heat, or electrical sparks. Avoid prolonged contact with skin or breathing of fumes. Use only in well-ventilated area.

NOTE

Toluene shall be the primary solvent used in the fabrication or repair of this assembly. MEK may be used if toluene is not available. Always use solvents sparingly and wipe up excess solvents; do not allow to dry by evaporation.

1. Fabricate new cover and base patches from polychloroprene-coated nylon cloth (figure 26-15).

2. Install two uni-directional snap fastener studs on cover patch.

3. Cement base patch uncoated surface to coated surface of cover patch using adhesive following procedures in paragraph 26-62.

NOTE

Properly oriented base patch will leave 1/4 inch perimeter of cover patch coated surface exposed (figure 26-15).

4. Ensure proper orientation of cover and base patch assembly (figure 26-15) and cement coated surface to life preserver flotation bladder following procedures in paragraph 26-62.

5. Apply toluene or MEK solvent to loosen unsatisfactory cover and base patches. Remove loosened patches from life preserver flotation bladder and discard.

26-85. PACKING PROCEDURE FOR LPU-21C(V)1/P LIFE PRESERVER ASSEMBLY.

NOTE

The LPU-21C(V)1/P shall be packed by qualified personnel at the lowest level of maintenance possible.

26-86. To pack an LPU-21C(V)1/P life preserver assembly, proceed as follows:

Materials Required

Quantity	Description	Reference Number
As Required	Talc, Technical	MIL-T-50036A
As Required	Cord, Nylon Type I	MIL-C-5040 NIIN 00-240-2154
As Required	Thread, Nylon Size A	V-T-295 NIIN 00-204-3803
As Required	Thread, Nylon Size E	V-T-295 NIIN 00-204-3884

1. Ensure that preserver has been inspected in accordance with paragraph 26-26.

2. Prior to packing, ensure that chambers are thoroughly deflated. Ensure all bladder surfaces front and rear are lightly dusted with talc.

3. Oral inflation valve shall be locked by knurled ring and placed in oral valve pocket. Position life preserver assembly with collar panel folded down.

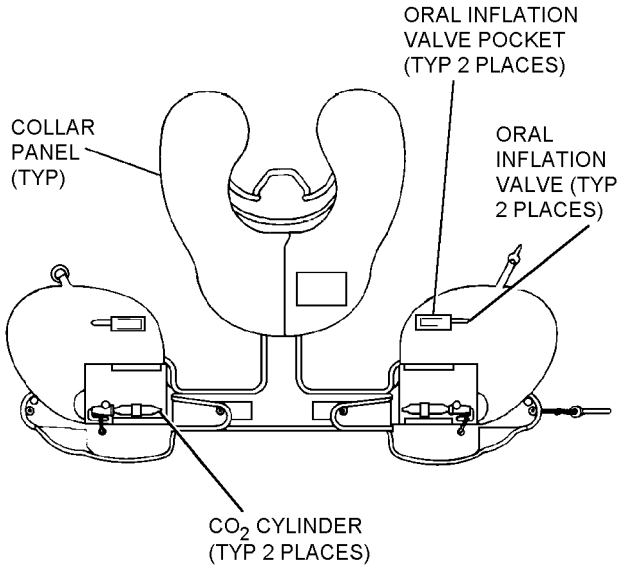

Step 3 - Para 26-86

4. Connect the snap fasteners on the bladders collar lobes with those on the casing and fold collar edge over snap fasteners in casing.

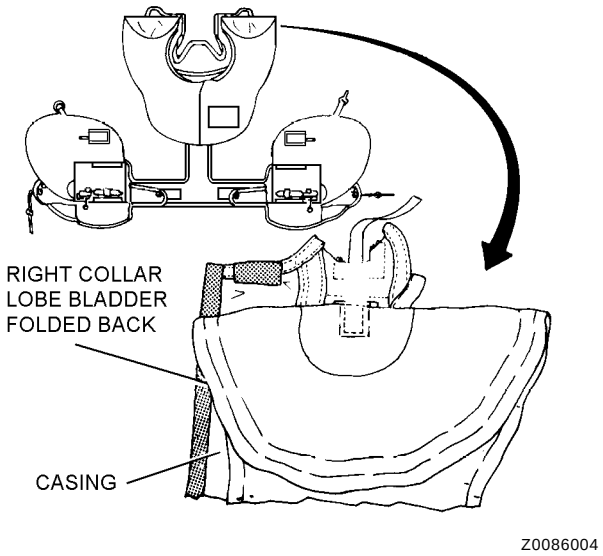

Step 4 - Para 26-86

5. Fold over edge of collar panels.

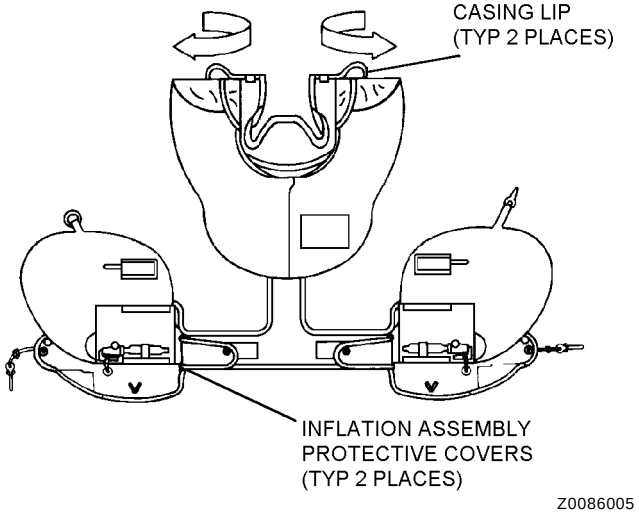

Step 5 - Para 26-86

6. Accordion-fold sides of collar lobes into collar casing.

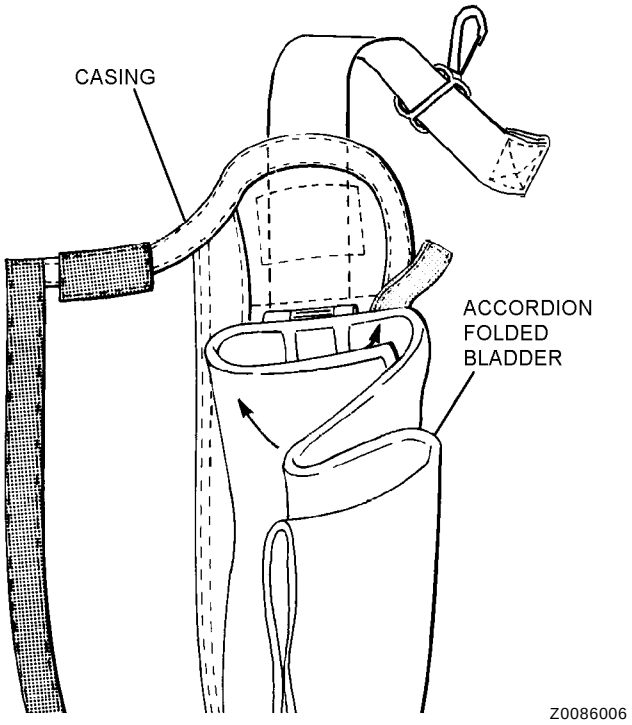

Step 6 - Para 26-86

7. Tuck in casing lip and secure collar casing with hook and pile tape.

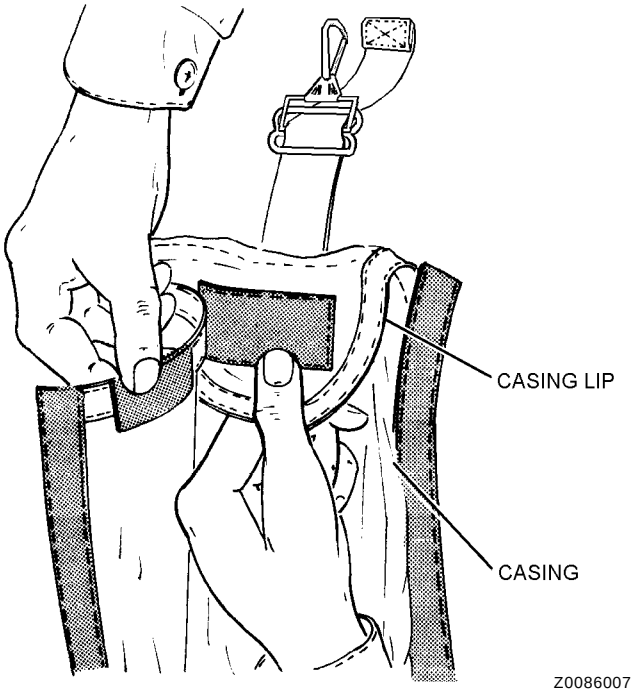

Step 7 - Para 26-86

NOTE

The unsewn 3/8 to 1/2 inch end tab of hook tape located on the front edge of the collar lobe casing shall be attached to the mating pile tape on the collar casing cover.

8. Close collar lobe section by securing the 3/8 to 1/2 inch unsewn portion of hook tape to pile tape casing cover.

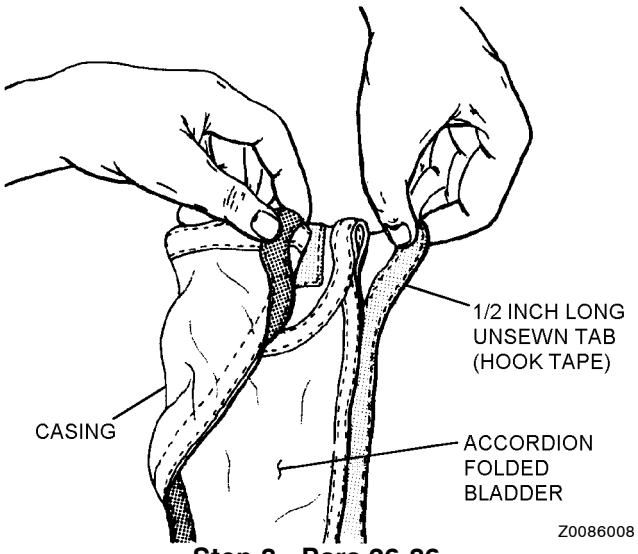

Step 8 - Para 26-86

9. Secure hook and pile tape approximately 8 inches along casing cover edge, securing the accordion-folded bladder within casing cover.

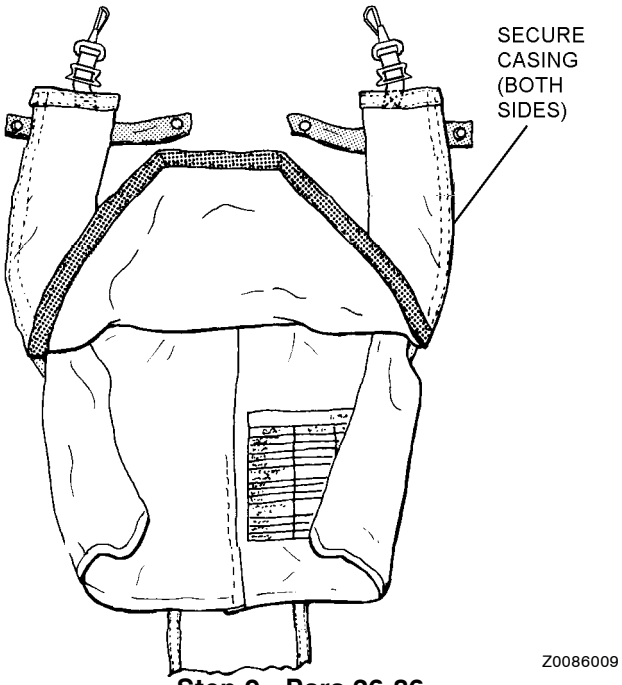

Step 9 - Para 26-86

10. Accordion-fold bottom of collar lobe into collar casing.

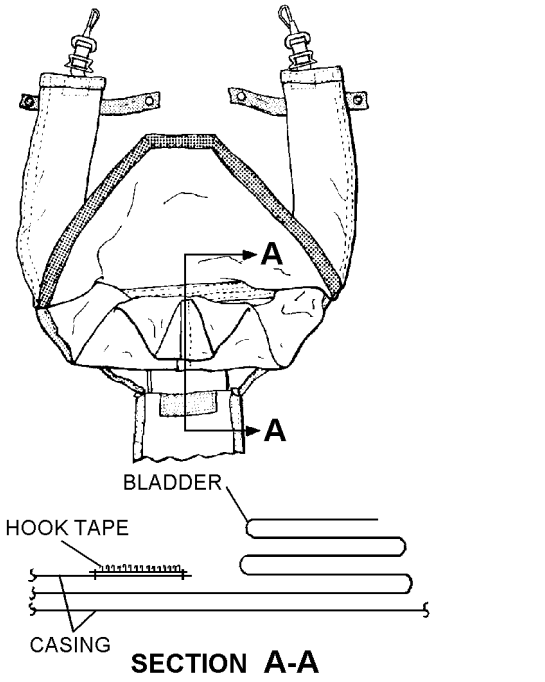

Step 10 - Para 26-86

NOTE

The unsewn 3/8 to 1/2 inch end tab of hook tape located on the rear edges of the collar lobe casing shall be attached to the mating pile tape on the collar casing cover.

11. Continue securing hook and pile tape along casing cover edge and casing lip, ending on unsewn end tabs of hook tape, completely enclosing collar lobe bladder within casing cover. Ensure all hook tape is engaged with pile tape and not exposed.

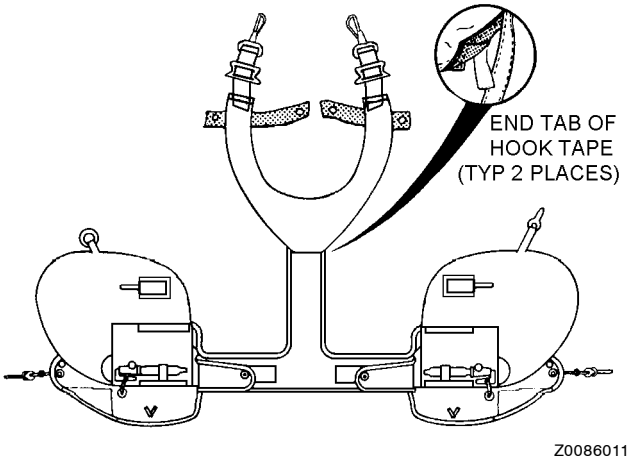

Step 11 - Para 26-86

WARNING

Do not use rubber bands to hold slip-on pockets on D-ring and snaphook fittings.

12. Insert snaphooks and D-ring into slip-on pockets. Close protective cover around inflation assembly and secure with hook and pile tape.

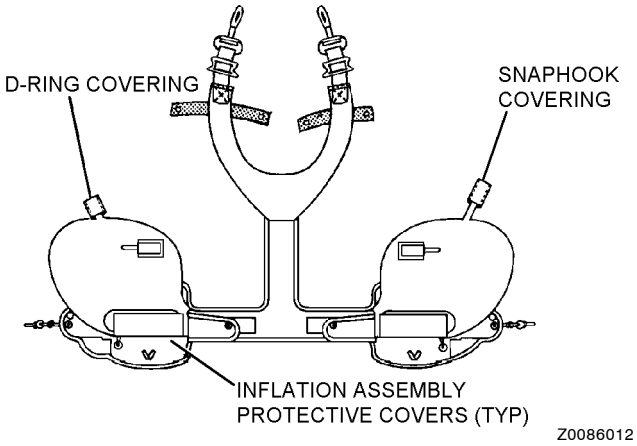

Step 12 - Para 26-86

13. Fold waist lobes over to top edge of protective covers.

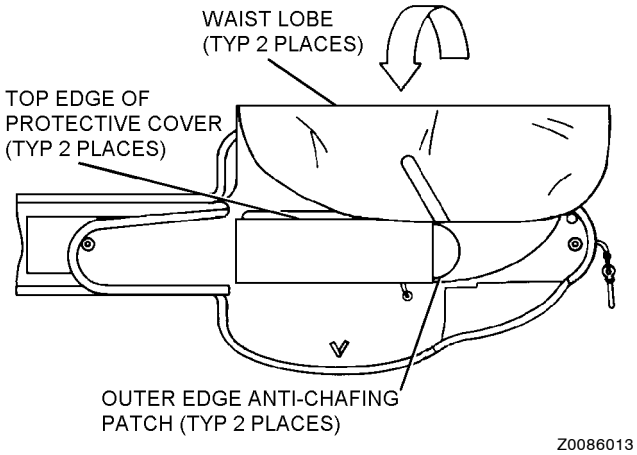

Step 13 - Para 26-86

14. Fold waist lobes over to outboard edge of a chafing patch.

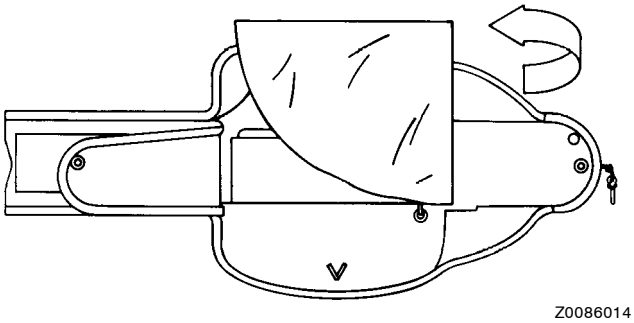

Step 14 - Para 26-86

15. Fold waist lobes over to bottom edge of protective covers.

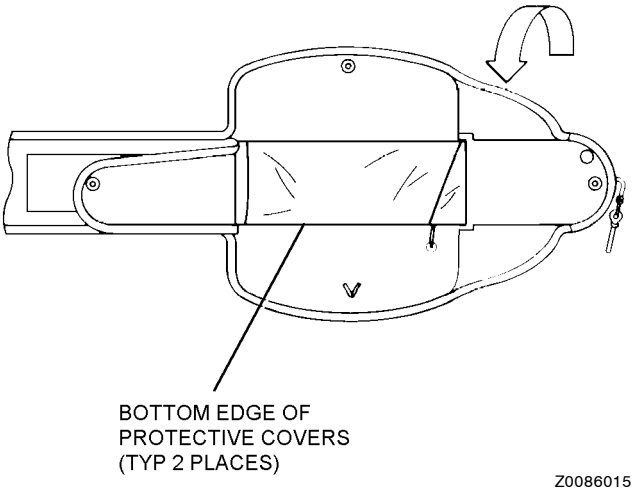

Step 15 - Para 26-86

NOTE

Packing cord shall be used to aid in closing life preserver casing.

16. Fold up bottom casing flap containing retaining loop. Insert an 8-inch length of Type I nylon cord through retaining loop (figure 26-16).

17. Pass ends of packing cord through grommet located in top casing flap (figure 26-17). Pull retaining loop through grommet.

18. Fold inboard casing flap over. Pass the packing cord through the grommet. Pull retaining loop through (figure 26-16).

19. Route locking pin under locking pin cover flap.

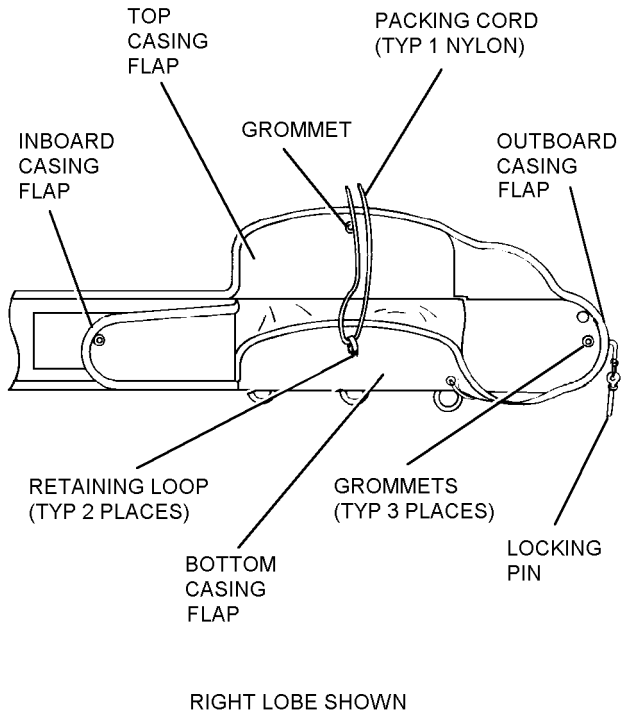

Figure 26-16. LPU-21C(V)1/P Packing Nomenclature

WARNING

To avoid possible injury when closing casing of right waist lobe, do not place palm of hand on waist closure snaphooks.

20. Fold outboard casing flap over. Pass packing cord through grommets and pull retaining loop through grommet far enough to accept locking pin. Insert locking pin through retaining loop and into pin keeper loop. Remove packing cord.

21. Safety-tie eye of locking pin to retaining loop with one turn of size A nylon thread, single. Safety-tie beaded inflation handle with one turn of size E nylon thread, single. Draw thread sufficiently to permit a 1/2 ± 1/8 inch space between middle beads and webbing on preserver. Tie ends of both safety ties with a surgeon's knot followed by a square knot.

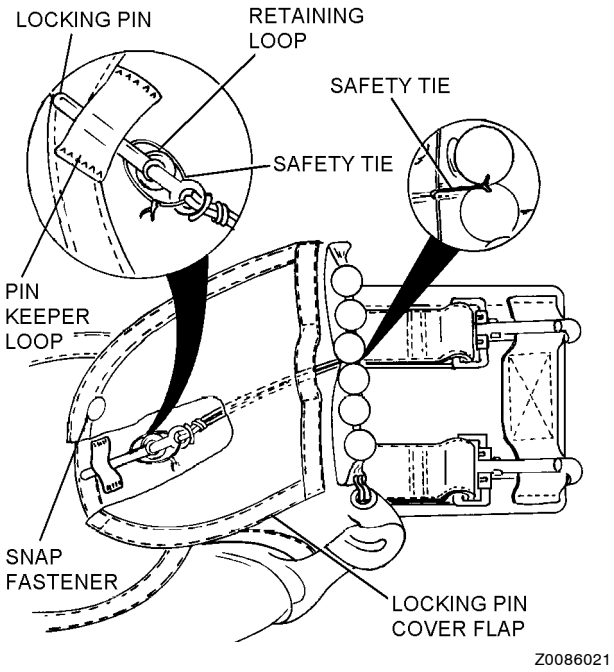

Step 21 - Para 26-86

22. Close locking pin cover flap snap fastener.

NOTE

NAVAIR 13-1-6.5, Rescue and Survival Equipment, contains information on inspection and replacement of survival items.

23. When required, ensure that survival items have been inspected for expiration dates and damage.

24. Make necessary entries on appropriate form in accordance with OPNAVINST 4790.2 Series.

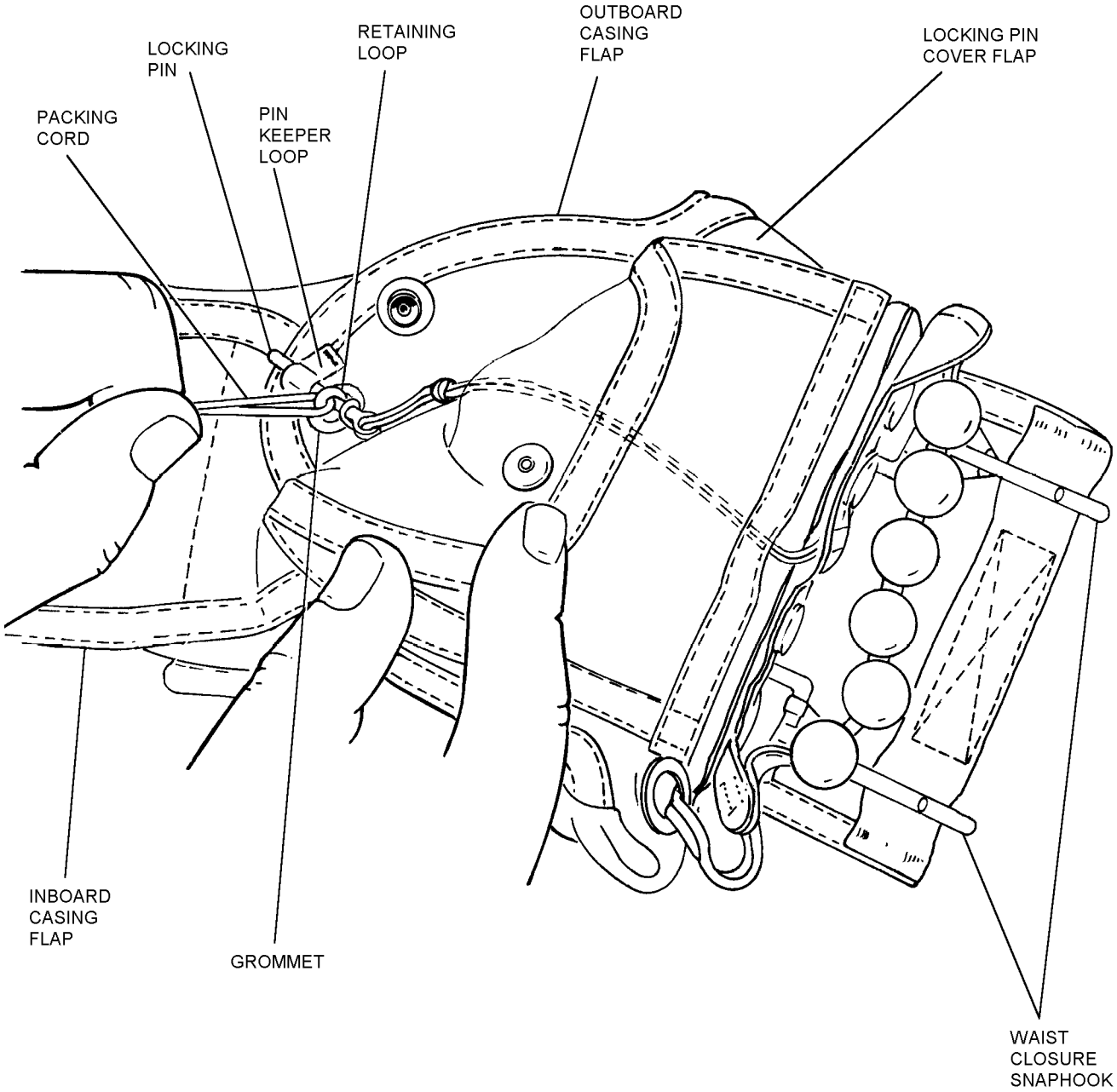

RIGHT LOBE SHOWN

10260017

Figure 26-17. Packing LPU-21C(V)1/P Life Preserver

Section 26-4. Illustrated Parts Breakdown (IPB)

26-87. GENERAL.

26-88. This section lists and illustrates the assemblies and detail parts of the LPU-21C(V)1/P Life Preserver assembly.

26-89. The Illustrated Parts Breakdown should be used during maintenance when requisitioning and identifying parts.

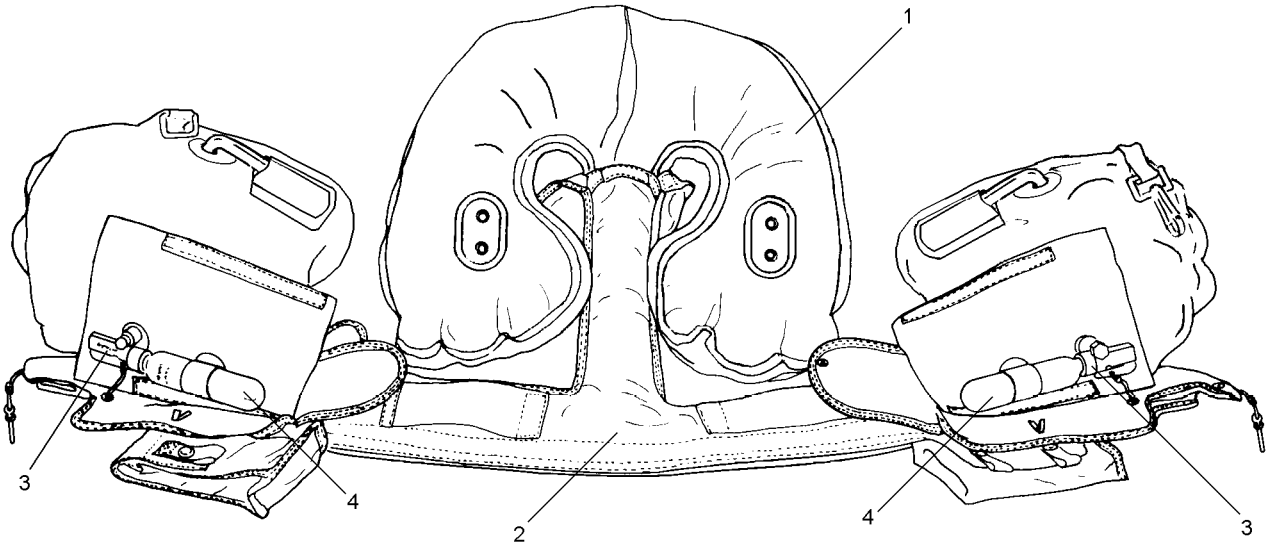

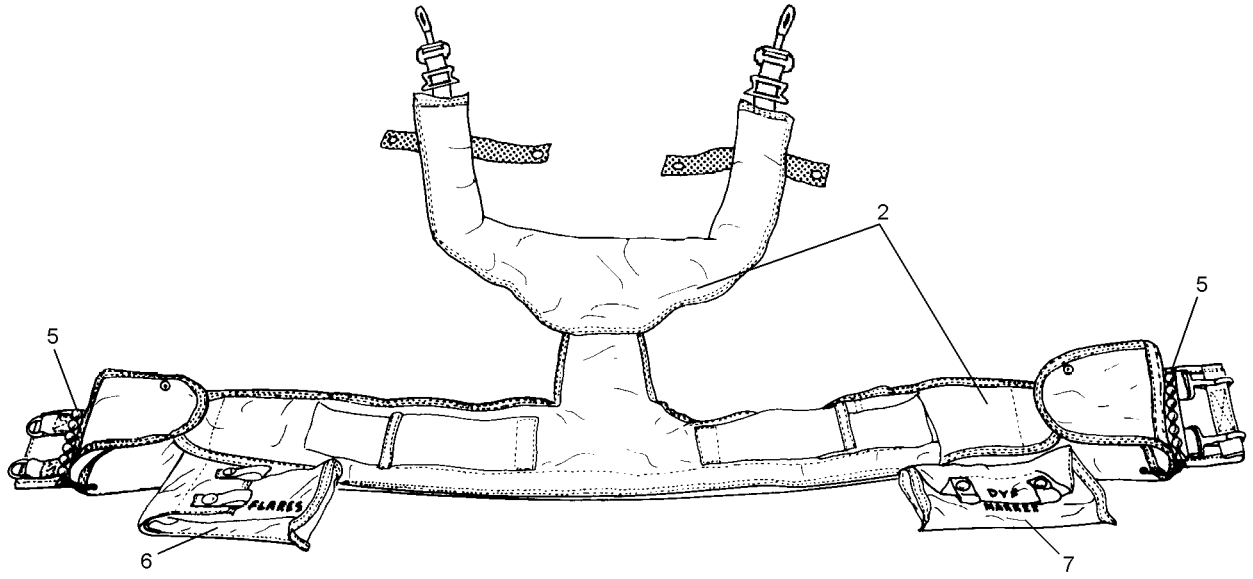

10260018

Figure 26-18. LPU-21C(V)1/P Life Preserver Assembly, Illustrated Parts Breakdown

Figure and Index Number	Part Number	Description 1 2 3 4 5 6 7	Units Per Assembly	Usable On Code
26-18	No Number	LPU-21C(V)1/P SERIES LIFE PRESERVER	REF	
-1	68A73H1-103 (NIIN 01-120-4894)	. INFLATABLE LIFE PRESERVER LPU-21C/P	1	
-2	1957AS104-1 (NIIN 01-120-4751)	. . CASING ASSEMBLY, LPU-21D/P	1	
	MIL-S-43770/1A	. . . SNAPHOOK	2	
-3	MIL-I-25370 (NIIN 00-561-0094)	. . INFLATION ASSEMBLY, Type II	2	
	105AS100-3	. . . GASKET, Top (30003) (Note 1)	2	
	105AS100-4	. . . GASKET, Bottom (30003) (Note 1)	2	
	105AS100-2	. . . GASKET, Seat Seal (30003) (Note 1)	2	
-4	MIL-C-25369 (NIIN 01-077-8773)	. . . CO_2 CYLINDER, Type III, 35 Gram	2	
-5	9975AS121-11 (NIIN 00-120-4752)	. . . BEADED INFLATION HANDLE, ... Type I	2	
-6	68A73D3-61 (NIIN 00-118-6187)	. . FLARE POUCH ASSEMBLY . . . . . . (Note 2)	1	
-7	68A73D2-41 (NIIN 00-118-6186)	. . DYE MARKER POUCH ASSEMBLY . . . . . . (Note 2)	1	

Notes:
1. Top, bottom, and seat seal gaskets are obtained from Valve Stem and Seat Seal Kit, P/N 105AS100-5, NIIN 00-498-6964, which contains two top, two bottom, and two seat seal gaskets.
2. Optional equipment at the discretion of the Squadron Commander.

NUMERICAL INDEX

Part Number	Figure and Index Number	SM&R Code
MIL-C-25369	26-18-4	PAGZZ
MIL-I-25370	26-18-3	PAGZZ
MIL-S-43770/1A	26-18-2	
105AS100-2	26-18-3	
105AS100-3	26-18-3	
105AS100-4	26-18-3	

Part Number	Figure and Index Number	SM&R Code
1957AS102-1	26-18-1	PAOGG
1957AS104-1	26-18-2	PAGZZ
68A73D2-41	26-18-7	PAGZZ
68A73D3-61	26-18-6	PAGZZ
68A73H1-103	26-18-1	PAOGG
975AS121-11	26-18-5	PAGZZ

CHAPTER 27

LPU-23B(V)1/P LIFE PRESERVER ASSEMBLY

Section 27-1. Description

27-1. GENERAL.

WARNING

The LPU-23B(V)1/P life preserver contains an automatic inflation device and is configured for use only in aircraft with ejection seat systems.

27-2. The LPU-23B(V)1/P life preserver is authorized for use only by aircrew personnel operating high performance aircraft equipped with ejection seat systems. It is designed as a constant wear item for use with the SV-2B survival vest or torso harness modified by ACC 380. Survival item pouches are attached to the life preserver casing. The dye markers and signal flares are not initially supplied and must be individually requisitioned. See figures 27-1, 27-2 and table 27-1.

27-3. The LPU-23B(V)1/P is not a procurable item. It is assembled by modifying the Polychloroprene flotation assembly used in the LPU-23B/P life preserver and assembling it into an LPU-23C/P casing assembly. See paragraph 27-85.

NOTE

The use of the LPU-23B/P casing with the LPU-23C/P flotation assembly is not authorized.

27-4. CONFIGURATION.

27-5. LPU-23B(V)1/P life preserver is configured with the FLU-8A/P or through attrition, the FLU-8B/P automatic inflation device. The LPU-23B(V)1/P life preserver assembly weighs four pounds (without survival items) and provides a minimum of 65 pounds buoyancy.

CAUTION

Use only Polychloroprene adhesives and Polychloroprene-coated cloth and patches on Polychloroprene-coated LPU-23B(V)1/P life preserver assemblies.

27-6. FLOTATION ASSEMBLY. The flotation assembly is constructed of polychloroprene-coated nylon cloth. The assembly consists of two independent flotation chambers. One chamber consists of the left waist lobe interconnected by a channel to the right collar lobe. The other chamber consists of the right waist lobe interconnected by a channel to the left collar lobe. Attached to a valve stem in each waist lobe is an automatic/manual CO_2 inflation assembly (FLU-8B/P). Also attached to each waist lobe is an oral inflation valve. The two chambers are sewn together at the center seam flash of the collar lobes. See figures 27-1 and 27-2.

NOTE

The designation FLU-8A/P has been left in this chapter, although all FLU-8A/P units should have been replaced with a FLU-8B/P units. Any FLU-8A/P Automatic Inflator found in service during scheduled maintenance shall be replaced with a FLU-8B/P Automatic Inflator.

27-7. AUTOMATIC INFLATION DEVICE FLU-8B/P. The FLU-8B/P is a sealed cartridge actuated automatic inflation devices with manual inflation capability

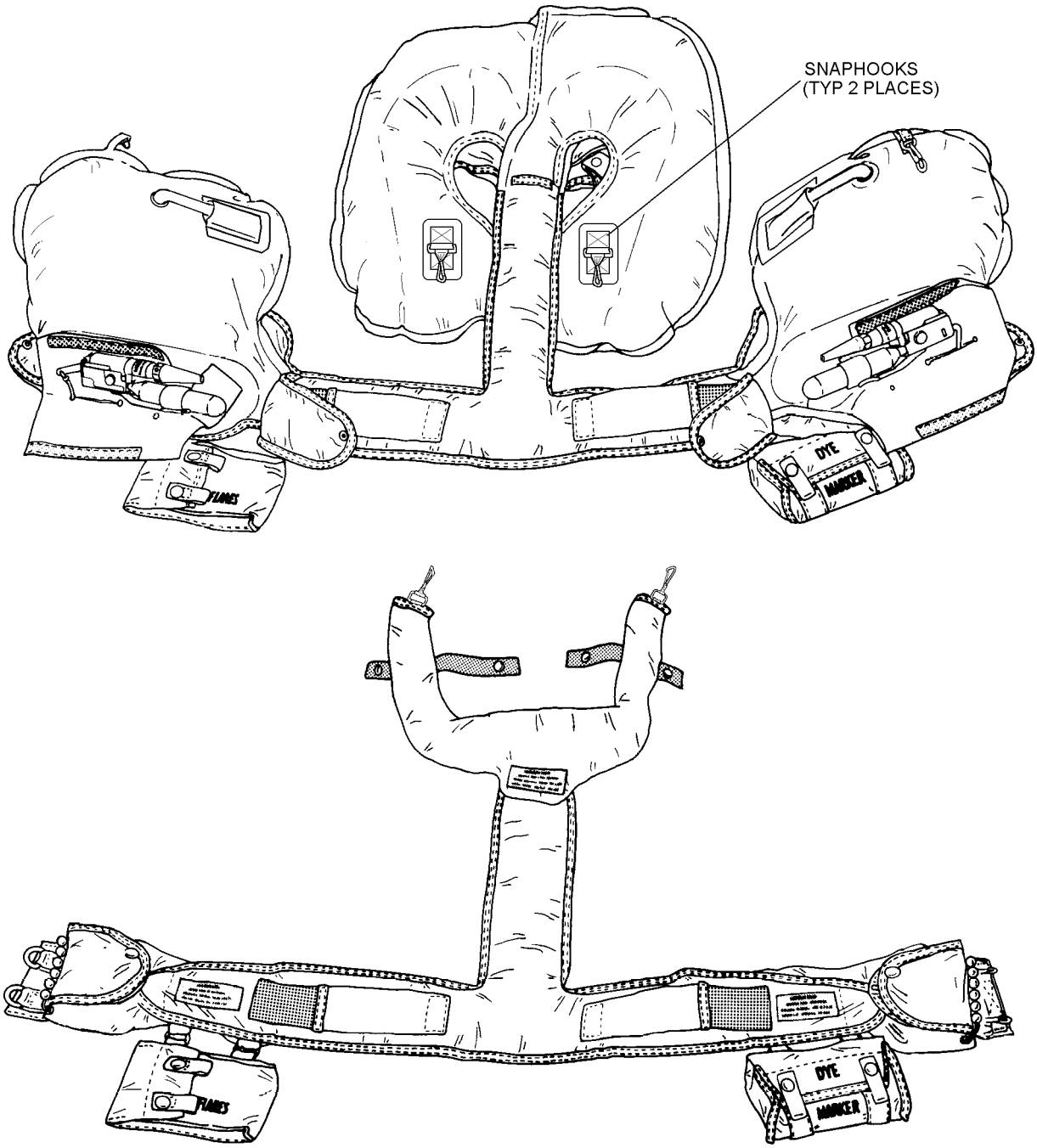

10270001

Figure 27-1. LPU-23B(V)1/P Life Preserver Assembly

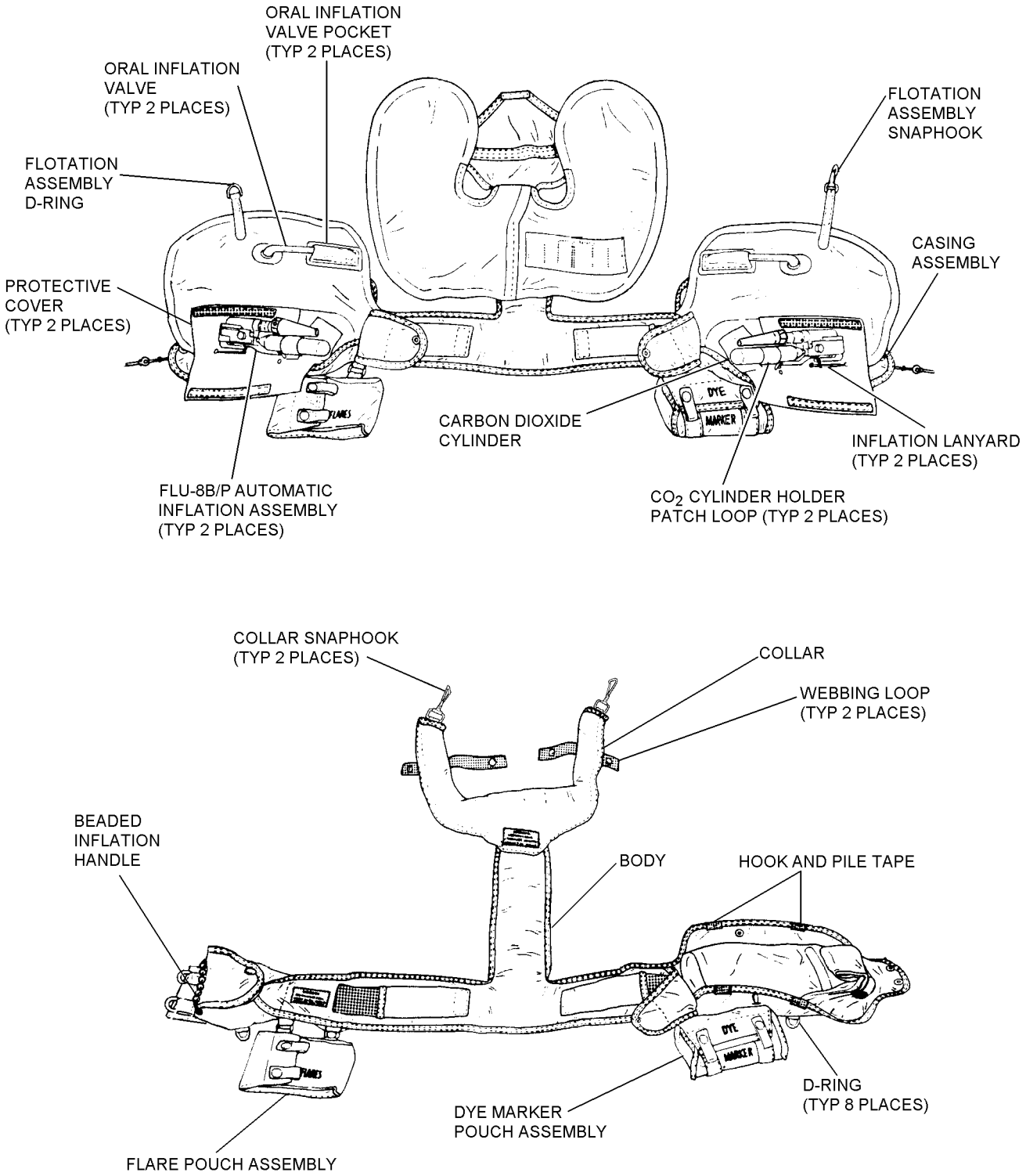

Figure 27-2. LPU-23B(V)1/P Life Preserver Assembly, Parts Nomenclature

(figure 27-3). The devices consist of a sensor housing and a body assembly into which a charged carbon dioxide (CO_2) cylinder, with an O-ring, is threaded. The sensor housing contains an electronic circuit which, when immersed in fresh or salt water, initiates automatic inflation of the LPU-23B(V)1/P life preserver. An inflation lanyard attached to the actuating lever and connected to the beaded inflation handle and nylon locking pin of the casing assembly, provides the manual inflation capability. (For more details on the FLU-8B/P, refer to NAVAIR 11-100-1.1.) The automatic inflation devices are installed on the valve stem of each waist lobe of the flotation assembly. A cap nut secures the device and upper and lower pressure-seal gaskets on the valve stem and serves as a cap for the valve stem.

27-8. WAIST LOBE. Each waist lobe of the flotation assembly has an attached attachment patch in which six uni-directional snap fastener sockets are installed. These snap fastener sockets, when mated with six uni-directional snap fastener studs on the casing assembly, secure the waist lobes of the flotation assembly to the casing assembly. The right waist lobe is equipped with a snaphook which connects to a D-ring on the left waist lobe to secure the lobes together after inflation.

NOTE

The uni-directional snap fastener socket is installed with the dot on its button oriented to the side of the fastener on which lift is applied to disengage the socket from the snap fastener stud.

27-9. COLLAR LOBE. Each collar lobe is equipped with a snaphook to attach the lobe to the D-ring of the survival vest. The inspection record patch of the life preserver is attached to the right collar lobe.

27-10. CASING ASSEMBLY. The casing assembly, which is fabricated from fire retardant aramid cloth, provides the flotation assembly with a protective cover. The assembly consists of the adjustable casing, belt keeper loops, snap fastener studs on the inside waist portion (which mate with snap fastener sockets on the waist lobes), and the front connector assembly.

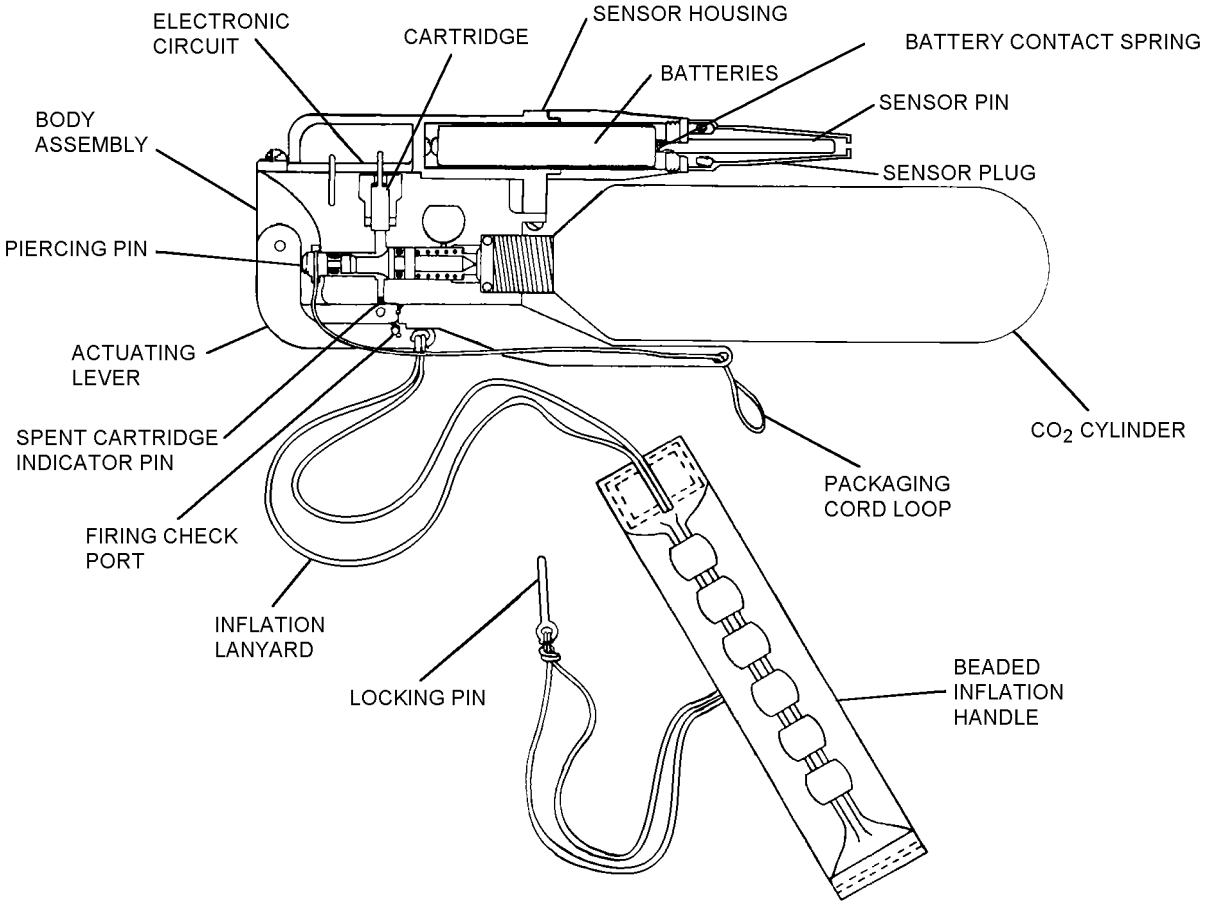

Figure 27-3. Automatic Inflation Device FLU-8B/P

27-11. Webbing belt keeper loops provide a means to attach the life preserver to the SV-2 survival vest or the integrated torso harness suit about the wearer's waist. Six D-rings on webbing belt keeper loops provide attach points for survival item pouches, life raft retaining line, and other accessories.

27-12. HOOK AND PILE TAPES. Hook and pile tapes, attached to the outside waist portion of the casing, are used for slack adjustment. In addition, hook and pile tapes attached about the periphery of the collar casing and the lower edge of the back portion of the casing are used to enclose the casing assembly about the flotation assembly.

27-13. APPLICATION.

27-14. The LPU-23B(V)1/P life preserver assembly is authorized for wear only by aircrew personnel wearing compatible flight clothing in high performance aircraft equipped with ejection seat systems.

27-15. FUNCTION.

27-16. The LPU-23B(V)1/P life preserver assembly is inflated either automatically (by immersion in fresh or salt water) or manually (by pulling both inflation assembly beaded handles).

27-17. The primary method of initiating inflation of the LPU-23B(V)1/P life preserver is the manual mode; pulling both beaded inflation handles. The beaded inflation handles provide the life preserver with a multidirectional capability for inflation initiation. The most effective and commonly used procedure is to pull both beaded inflation handles in a natural, slightly down and straight out direction from the body. Each beaded inflation handle is connected by lanyard to the actuating lever of the inflation assembly and the nylon locking pin of the casing assembly. When the beaded inflation handle is pulled, the locking pin is withdrawn from the outer packaging cord loop freeing the inboard and outboard casing flaps. Simultaneously, tension on the inflation lanyard moves the actuating lever to its actuated position. The rotary cam action of the hub of the actuating lever drives the piercing pin forward to puncture the diaphragm of the CO_2 cylinder. As the piercing pin is driven forward, the inner loop of the packaging cord is released from the inflator body. Carbon dioxide under pressure is released from the cylinder to inflate the life preserver. Hook and pile tapes which secure the casing assembly about the collar lobes separate as inflation occurs. After each activation in the manual mode, the CO_2 cylinder and O-ring must be replaced with a charged cylinder and new O-ring.

27-18. The FLU-8B/P Automatic Inflation Device serves as a backup inflation system for the LPU-23B(V)1/P life preserver. Automatic inflation occurs when immersion in fresh or salt water activates the electronic circuit in the sensor housing of the device (figure 27-3). The activated electronic circuit detonates an explosive primer (cartridge). Energy from the burning explosive forces the spent-cartridge indicator into the firing check port and simultaneously propels the piercing pin forward. As the piercing pin punctures the diaphragm of the CO_2 cylinder carbon dioxide under pressure is released to inflate the life preserver. During the forward movement of the piercing pin, the inner loop of the packaging cord is released from the body of the inflator. Hook and pile tape which secures the casing assembly about the collar lobes separate as inflation occurs.

27-19. Automatic inflation is a one-time function for the automatic inflation device (inflator). After each activation in the automatic mode, the inflator must be replaced with a new one.

NOTE

The FLU-8B/P automatic inflation device may be operated in the manual mode an unlimited number of times without affecting its one-time automatic feature.

27-20. In an emergency situation, the oral inflation valves may be used to top off the inflated preserver, maintain inflation of a leaky preserver, or inflate a chamber if an inflation assembly malfunctions. The oral inflation valves are also used to inflate a preserver with air during an inspection test or to evacuate a preserver in preparation for packing.

NOTE

The casing must be manually opened and the flotation assembly unfolded before the life preserver can be inflated using the oral inflation valve.

Table 27-1. LPU-23B(V)1/P Survival Items

Description	Quantity Required	Reference Number	NIIN	SM&R Code
Dye Marker (Note 1)	2	MIL-S-17980	00-210-9986	PAOZZ
Signal, Smoke and Illumination, Marine MK-124 MOD 0 (Note 1)	2	—	01-030-8330	PA--Z
Notes: 1. Items are included in accessory kit NIIN 00-025-9160.				

Section 27-2. Modifications

27-21. GENERAL.

27-22. There are no authorized modifications to the LPU-23B(V)1/P life preservers at this time. Common repairs and fabrication instructions to maintain serviceability are listed in table 27-2.

Table 27-2. LPU-23B(V)1/P Common Repairs and Fabrications

Description of Repair or Fabrication	Paragraph Number
Determination of Repairability	27-60
Casing Repair Procedures	27-62
Casing Grommet Replacement Procedures	27-63
Cementing Life Preservers	27-64
Patching Life Preservers	27-65
Replacement of Oral Inflator Valve	27-67
Recementing of Bladder Fin Seams	27-68
Fabrication of Slip-On Pockets For Life Preserver Hardware	27-70
Replacement of Flare and Dye Marker Pouch Snaphooks	27-71
Flare Pouch Repair	27-72

Table 27-2. LPU-23B(V)1/P Common Repairs and Fabrications (Cont)

Description of Repair or Fabrication	Paragraph Number
Disassembly of the Life Preserver	27-73
Reassembly of Life Preserver	27-74
Replacement of Beaded Inflation Handle Assembly	27-75
Replacement of FLU-8B/P Automatic Inflator Assembly	27-76
Replacement of Packaging Cord, FLU-8B/P	27-77
Replacement of Sensor Plug Cap Assembly, FLU-8B/P	27-78
Replacement of Top and Bottom Gaskets	27-79
Replacement of Check Valve Assembly	27-80
Fabrication of Protective Cover Assembly	27-81
Fabrication of Collar Lobe Webbing Loops	27-82
Fabrication and Installation of Locking Pin Cover	27-83
Installation of LPU-23B/P Flotation Assembly into LPU-23C/P Casing Assembly (LPU-23B(V)1/P)	27-85
Fabrication and Installation of Waist Lobe Attachment Patch	27-86
Bladder Attachment Patch	27-87
Installation of Casing Attachment Patch Snap Fasteners	27-88

Section 27-3. Maintenance

27-23. GENERAL.

27-24. This section contains information on inspection, disassembly, repair/replacement, testing, and reassembly of the LRU-23B(V)1/P life preserver.

27-25. INSPECTION.

27-26. All life preservers shall be subjected to Preflight, Special and Calendar/Phase Inspections.

27-27. The Preflight Inspection shall be performed on life preservers prior to each flight by the aircrewmember to whom the life preserver is assigned. The Preflight Inspection shall be performed on life preservers installed in aircraft prior to each flight by assigned aircrewmembers.

27-28. The Special Inspection shall be performed on all aircraft installed life preservers at intervals not to exceed

30 days. The inspection shall be performed at the organizational level of maintenance by personnel assigned to the Aviator's Equipment Branch.

27-29. Upon completion of the inspection, make necessary entries on the appropriate form in accordance with OPNAVINST 4790.2 Series. The 30-Day Special Inspection may be recorded on a separate history card from the history card recording Calendar/Phase Inspections, functional checks, and modifications.

27-30. The Calendar/Phase Inspection shall be performed on all life preservers prior to placing in service. The Inspection cycle thereafter shall be as follows: personal issue life preservers shall be inspected once every 90 days. Aircraft-installed life preserver inspection shall coincide with the inspection cycle of the aircraft in which installed. See applicable Planned Maintenance System (PMS) publications for specific intervals. In no case shall the interval exceed 231 days. Unless operational requirements demand otherwise, the life preserver Calendar/Phase Inspection shall be performed by the intermediate level of maintenance or above. The functional test shall be performed prior to placing in service, every fourth inspection cycle thereafter, and whenever an inflation assembly is replaced. The leakage test shall be performed during every inspection cycle. The battery visual inspection will be performed prior to placing life preservers in service. If inspection indicates damage, complete appropriate forms in accordance with OPNAVINST 4790.2 Series and forward entire assembly to supply. Refer to paragraph 27-60 for determination of repairability.

27-31. QUALITY ASSURANCE. Properly detailed procedures present a logical sequence for the inspection process. The more critical procedures are underlined to designate steps which require a Quality Assurance inspection to assure performance of specific requirements. After the underlined step is performed by the Aircrew Survival Equipmentman, the procedure shall be verified before the next step is performed. This verification shall be performed by a Collateral Duty Inspector or Quality Assurance Representative (CDI, CDQAR, or QAR). Work Center supervisors are primarily responsible for quality assurance within their centers. OPNAVINST 4790.2 Series permits supervisors to nominate their more experienced personnel to serve as quality assurance inspectors. Nominated personnel shall be screened and examined by the Quality Assurance Officer prior to their designation as Quality Assurance Inspectors or Quality Assurance Representatives by the Commanding Officer. Under no circumstances shall an Aircrew Survival Equipmentman perform his own quality assurance inspection.

27-32. PREFLIGHT/SPECIAL INSPECTION. To perform a Preflight/Special Inspection, proceed as follows:

WARNING

Ensure that the beaded inflation handles are readily accessible. The beaded inflation handles shall be secured with snap fasteners to the life preserver end flap.

CAUTION

Do not open any sealed or safety-wired/safety tied portions of preserver for Preflight/Special Inspection.

1. Inspect exposed metal parts for corrosion and damage.

2. Inspect for presence, security of attachment and, if applicable, operation of survival items.

3. Inspect casing fabric for cuts, tears, abrasions, security of stitching, and other damage.

4. Check warning label for secure attachment to life preserver fabric.

5. Ensure beaded inflation handles are secured to snap fasteners. Inspect safety ties on beaded inflation handles. The beaded inflation handle safety ties may be replaced without removing the life preserver from service.

6. Inspect safety ties on locking pins.

7. Inspect uni-directional snap fasteners securing flotation assembly to casing assembly for presence, security of attachment, corrosion, and ease of operation.

8. Inspect hook and pile tape closure at collar for separation; fasten as necessary.

9. Adjust and don preserver to ensure proper fit.

10. If any discrepancy is noted, the preserver shall be removed from service and repaired in accordance with procedures in this volume.

27-33. ACCEPTANCE/CALENDAR/PHASE INSPECTION. The Acceptance/Calendar/Phase Inspection consists of the following tasks:

1. Beaded Inflation Handle Inspection
2. Case, Container/Pouch Inspection
3. Functional Test (every fourth inspection cycle)
4. Visual Inspection
5. Life Preserver Configuration
6. General Inspection
7. Battery Visual Inspection (every fourth inspection cycle)
8. Battery Voltage Testing (once every 90 days)
9. Markings Inspection
10. Survival Items Inspection
11. Inflation Assembly Inspection
12. Beaded Inflation Handle Pull Test
13. Leakage Test
14. Records Updating
15. Repacking

27-34. BEADED INFLATION HANDLE INSPECTION. Inspect beaded inflation handle for the following:

1. Attachment of inflation lanyard to beaded handle.

2. Attachment of locking pin lanyard to beaded handle. Overhand knot on locking pin lanyard shall be within 3/4 inch from eye of pin.

3. Corrosion on snap fasteners and ease of operation.

4. Cuts, tears, deterioration, abrasion, stains, and general cleanliness of fabric.

5. Presence of safety tie on beaded inflation handle.

27-35. CASE, CONTAINER/POUCH INSPECTION. To inspect cases, containers, and/or pouches, proceed as follows:

1. Inspect fabric for cuts, tears, deterioration, abrasion, stains, and general cleanliness.

2. Inspect seams for proper adhesion or stitching.

3. Inspect straps and loops for security and wear.

4. Inspect any other parts for wear, damage, and security.

NOTE

Life preservers missing the D-rings used to attach dye marker and flare pouches shall be considered serviceable provided the aircrewmember to whom it is issued does not desire to utilize the pouches.

5. All hardware for security of attachment, corrosion, damage, wear and, if applicable, ease of operation.

6. Inspect uni-directional snap fastener assemblies for presence, security of attachment, proper orientation, ease of operation, corrosion, and wear.

NOTE

All uni-directional snap fasteners shall be installed with the dot on the button of the snap fastener socket positioned on the side of the snap fastener to which lift must be applied to disengage the socket from the snap fastener stud.

All snap fasteners on the attachment patch of each flotation lobe shall be installed with the dot on each socket button positioned nearest to, and pointing toward, the center point of the attachment patch.

7. If any discrepancies are found, the case, container, or pouch shall be repaired or removed from service as deemed appropriate by the inspection activity.

27-36. FUNCTIONAL TEST. To perform a functional test, proceed as follows:

CAUTION

Ensure area surrounding preserver is free of foreign objects.

1. Completely open preserver casing prior to conducting functional test. Both release pins shall be removed from their respective loops, the collar hook and pile tape fasteners shall be separated, and the waist and collar lobes shall be completely unfolded and laid out flat.

CAUTION

The functional test for the LPU-23B(V)1/P series life preserver will be performed manually. Automatic actuation of the FLU-8B/P series automatic inflator is a one-time function. A new FLU-8B/P inflator shall be installed on the life preserver to replace a previously spent inflator. The FLU-8B/P inflators can be operated manually an unlimited number of times, however, after each manual operation a new O-ring and CO_2 cylinder must be installed. Refer to paragraph 27-55.

2. Actuate inflation assemblies.

3. The preserver shall fully inflate to design shape, without evidence of restriction, in less than 30 seconds.

4. If preserver does not properly inflate, determine cause. Ensure stem and valve are clean and free of foreign matter.

5. If correction is made, the preserver shall be functionally tested again.

6. Deflate preserver in accordance with paragraph 27-37 to remove all CO_2.

27-37. DEFLATION. To deflate a life preserver, proceed as follows:

Support Equipment Required

Quantity	Description	Reference Number
1	Pump, Rotary Vacuum (or equivalent)	NIIN 00-052-5015 (90567)
As Required	Hose, 3/8- or 1/2-inch, Inside Diameter, Rubber	—

1. Attach one end of rubber hose to vacuum pump.

2. Deflate through oral inflation valves. Unlock oral inflation valve, hold in open position, and hold vacuum pump hose against end of oral inflation valve. When compartment is collapsed, release oral inflation valve. Screw lock closed.

27-38. VISUAL INSPECTION. Prior to visually inspecting a life preserver assembly, the life preserver shall be inflated with air to 1.0 psig.

CAUTION

Remove all carbon dioxide cylinders prior to inflating life preserver with air.

NOTE

If suitable air source is not available, water-pumped nitrogen (FED SPEC BB-N-411) may be substituted.

27-39. LIFE PRESERVER CONFIGURATION. The life preserver shall be updated by comparing it to figures 27-1 and 27-2, and Section 27-4.

27-40. GENERAL INSPECTION. Examine life preservers for the following:

1. Preserver fabric for cuts, tears, punctures, deterioration and abrasion. Refer to paragraph 27-62 for repair instructions.

2. Seam tapes for proper adhesion. Refer to paragraph 27-68 for repair instructions.

3. Valve inlet stems for security.

4. Check that silver indicator is not visible in firing check port. If the silver indicator is visible, the inflator is spent and the automatic feature of the inflator is negated. A new inflator shall be installed on the life preserver to replace the previously spent inflator. Refer to paragraph 27-76.

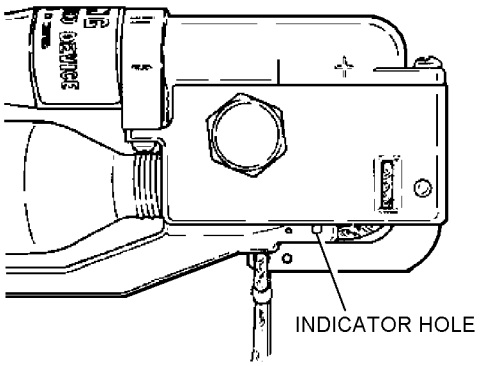

AA040004

Step 4 - Para 27-40

NOTE

For data on total life of the FLU-8B/P automatic inflation assembly, refer to NAVAIR 11-100-1.1. If total life expiration date occurs before date of next scheduled calendar inspection, replace inflator assembly. The manganese dioxide batteries used in the assembly have a total life of 3 years from the date of manufacture.

5. Check Aircrew Systems Record for date of installation of each FLU-8B/P automatic inflator. For date of manufacture, refer to the manufacturer's identification plate of each FLU-8B/P inflator. See figure 27-4 for lot numbering system.

6. Oral inflation valve(s) for cracks, security, ease of operation, and corrosion.

7. Patches for proper adhesion and wear. Refer to paragraph 27-65 for repair instructions.

8. Any other parts for wear or other damage.

9. All hardware for security of attachment, corrosion, damage, wear and, if applicable, ease of operation.

10. Preservers for stains, dirt, and general cleanliness. Refer to paragraph 27-51 for cleaning instructions.

11. Cross threading and/or loose manifold nuts.

27-41. BATTERY VISUAL INSPECTION. To inspect the batteries installed in the FLU-8B/P inflator, proceed as follows:

Support Equipment Required

Quantity	Description	Reference Number
1	Multimeter (Digital)	8600A or equivalent (CAGE 89536) NIIN 01-010-0088
1	Wrench, 3/4-Inch	—

WARNING

No foreign object should be inserted into sensor plug ports for any reason.

1. Remove sensor plug cap using a standard 3/4-inch wrench. See figure 27-5.

2. Remove batteries and check for the following: leakage, corrosion, dents, depressions and cracks. If found, the batteries shall be rejected.

3. Check sensor plug cap for cracks.

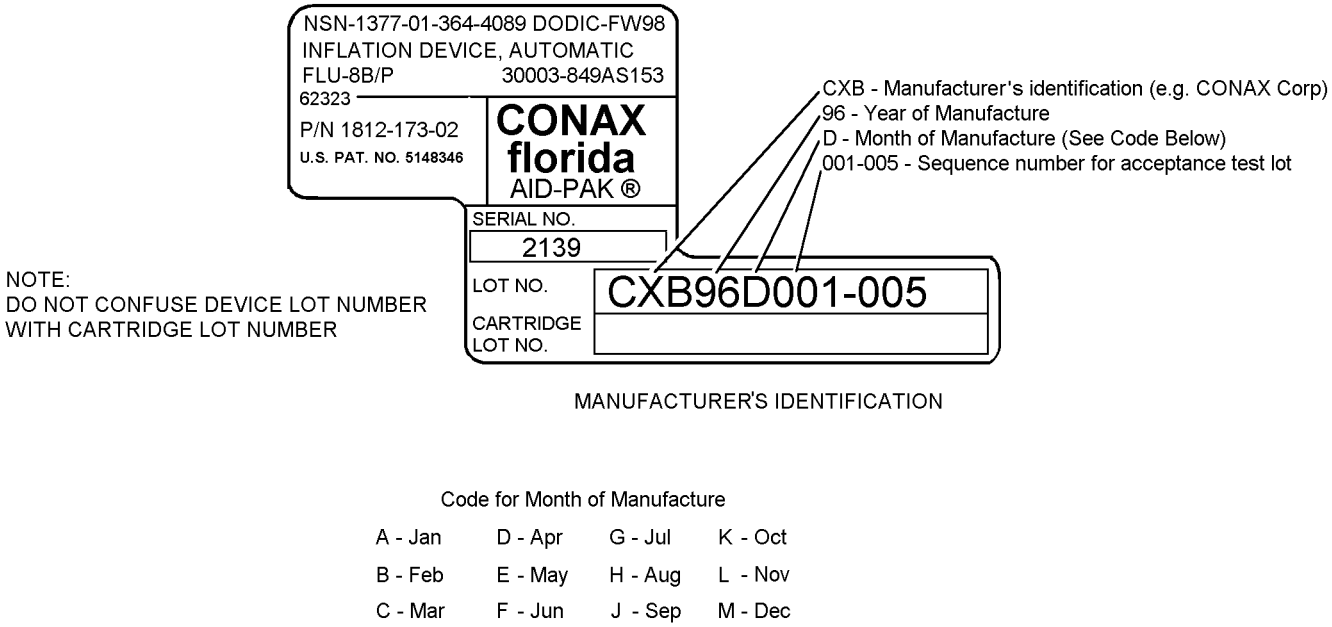

10270004

Figure 27-4. Lot Numbering System for FLU-8B/P Automatic Inflators

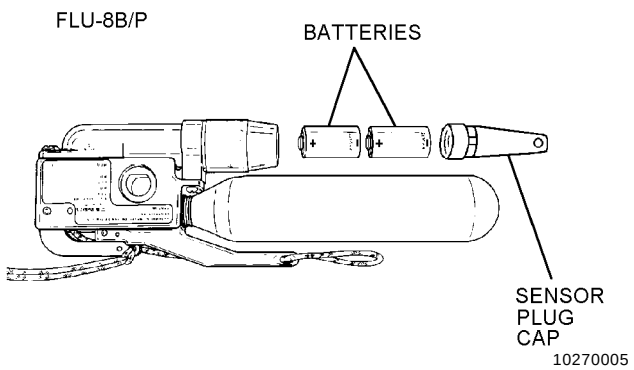

Figure 27-5. Battery Removal

NOTE

The total service life for the manganese dioxide battery (FW14) is three years from date of manufacture. For date coding information on the FW14 battery, refer to NAVAIR 11-100-1.1. Replace both batteries if life of either battery expires prior to the next calendar inspection.

4. Check date of manufacture stamped on the battery. Also check date of installation recorded in accordance with OPNAVINST 4790.2 Series.

4A. Using multimeter set-up to measure dc voltage. Check each battery for shorted casing. Place one lead on the positive terminal and the other on the battery case. If a voltage reading of 0.1 volts dc or higher is obtained, reject the battery for use and discard battery in an appropriate manner.

5. Reinstall or replace batteries if needed. Torque FLU-8B/P sensor plug cap to 15 lb-in using 3/4-inch socket and torque wrench. Ensure that date of installation and date of manufacture are recorded on appropriate form in accordance with OPNAVINST 4790.2 Series. See figure 27-5 for proper battery arrangement and refer to paragraph 27-56 for battery replacement.

27-42. BATTERY VOLTAGE TESTING. To test batteries, proceed as follows:

CAUTION

Do not use analog (needle) voltage multimeter. Use digital reading voltage multimeter.

Support Equipment Required

Quantity	Description	Reference Number
1	Multimeter (Digital)	8600A or equivalent (CAGE 89536) NIIN 01-010-0088

WARNING

Ensure that the multimeter is set in the voltage measuring mode and NOT the resistance measuring mode as a resistance measurement will trigger the squib and fire the inflator. The inflator will also fire with any conductive material making contact from the sensor pin to any conductive surface of the inflator device.

Do not touch the inflator with your bare hands or any conductive material while performing this test. Faulty readings may be obtained, or the squib may be fired if the body becomes an electrical pathway between the sensor pin and any conductive part of the inflator assembly.

NOTE

Provide the positive (+) test lead with a standard test probe (1/16-inch size) on a standard handle (3-4-inch nominal length). Provide the negative (-) test lead with a banana type-test plug (1/8-inch size) on a short handle (one-inch nominal length). Adjust the tension on the ribs of the banana plug so that when inserted into a sensor plug end port (7/16-inch nominal depth) the weight of the test lead will not withdraw the plug. (Use an undamaged uninstalled sensor plug for verification, not an inflator with batteries installed).

1. Insert the negative (-) test probe into the end port of the sensor plug. Remove hand. Using the pointed positive (+) probe, touch and maintain contact with one of the screw heads near the lever-end of the inflator.

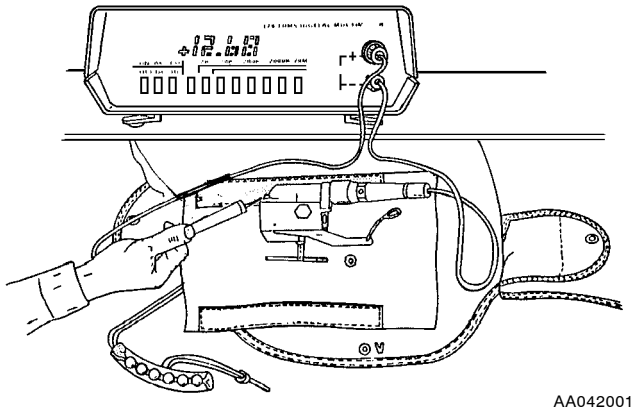

Step 1 - Para 27-42

2. Wait 15 seconds for the FLU-8B/P circuits to stabilize after connecting the test leads before taking the voltage reading.

WARNING

The voltage reading should begin at a high value and then gradually shift downward (0.15 volts typical) before final stabilization. If no downward shift in meter reading occurs, or if the shift continues steadily downward more than 1.0 volt during battery test, the FLU-8B/P inflator shall be rejected.

CAUTION

Never replace one battery. Always replace the pair.

3. Interpret battery test readings and respond as indicated below:

a. A reading of +12 volts or more indicates that the batteries are at full power and correctly installed.

b. A reading of -12 volts or more indicates that both batteries are installed backwards. Batteries must be reversed.

c. A reading of zero volts indicates one battery is inserted backwards, battery contact is faulty or batteries are not installed. Inspect and correct.

d. If a correct battery voltage reading cannot be obtained with batteries of verified full charge properly installed, the inflator is defective. Reject and report for engineering investigation according to OPNAVINST 4790.2 Series.

NOTE

The same multimeter and test leads may be used to test batteries singly or in pairs external to the inflator. Voltage readings will be slightly higher and will not drift downward when testing outside the inflator.

4. If batteries need to be rearranged or replaced, refer to paragraph 27-56.

5. After replacing or rearranging batteries, repeat steps 1 and 2.

27-43. MARKINGS INSPECTION. To inspect and restore marking, proceed as follows:

Materials Required

Quantity	Description	Reference Number
As Required	Ink, Marking, Laundry, Black	SPE-92 NIIN 00-161-4229
	-or-	
As Required	Ink, Drawing, Waterproof, Yellow	A-A-59291 NIIN 00-634-6583

1. Compare markings on preserver to those listed in table 27-3.

2. Restore any faded markings.

3. Deleted.

4. Correct any markings which do not agree with the applicable table. Paint out old marking and enter new marking as close to proper position as possible.

27-44. SURVIVAL ITEMS INSPECTION. To inspect survival items, proceed as follows:

1. Inventory all items by checking items against table 27-1. Replace any missing or unsatisfactory item.

NOTE

NAVAIR 13-1-6.5, Rescue and Survival Equipment contains detailed information on the inspection of survival items.

2. Inspect all items for damage, spent contents and expired service life. Replace as necessary.

3. Operate all items which are not intended for one-time use. Replace as necessary.

27-45. INFLATION ASSEMBLY INSPECTION. To inspect life preserver inflation assembly, proceed as follows:

1. Remove CO_2 cylinder from valve assembly.

2. Examine inflation device, actuating lever and lanyard, and locking pins for fraying, corrosion, stripped threads, and other damage.

3. If required, remove any sharp edges from valve with a fine round file.

4. Operate actuating lever several times. Ensure that lever moves freely and ensure that piercing pin moves properly inside valve body. Inspect point of piercing pin for serviceability. If point is flat, rounded, dull, or otherwise worn or damaged, replace inflation assembly.

5. Ensure that packaging cord loop is not pinched between piercing pin and actuating lever. If there is free play in the actuating lever when it is in its cocked position, the packaging cord loop is pinched. If necessary, reinstall in accordance with paragraph 27-77.

NOTE

Each time inflation assembly gaskets or inflation assembly is removed and replaced for any reason, a functional test shall be conducted. Refer to paragraph 27-36. Use new gaskets when replacing device.

6. If any discrepancy is noted in device that is not repairable in accordance with paragraph 27-77, remove assembly and install a new inflation device.

27-46. BEADED INFLATION HANDLE PULL TEST. To perform the beaded inflation handle pull test, proceed as follows:

Quantity	Description	Reference Number
1	Gage, Dial, Push/Pull, 0 to 50 lb	DPPH50 (CAGE 11710) or equivalent NIIN 00-473-0108

1. Ensure that CO_2 cylinders have been removed. Actuate the inflator assembly. All snap fasteners on beaded inflation handle must be fully engaged.

2. Attach gage to webbing between third and fourth bead on inflation handle.

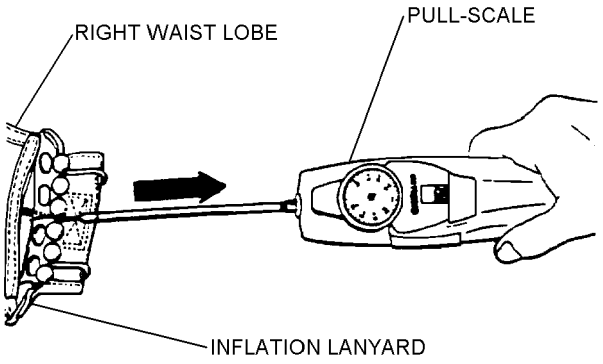

AA046002

Step 2 - Para 27-46

Table 27-3. LPU-23B(V)1/P Life Preserver Markings

Marking (Note 1)	Location	Letter Height
CASING, LIFE PRESERVER, LPU-23B(V)1/P PART NO. CONTRACT NO. [applicable number] MANUFACTURER [applicable number] DATE OF MANUFACTURE [month and year] SERIAL NO. [applicable number]	Center of casing waist section (inside)	5/16 inch 3/16 inch
DYE MARKER	Pouch (right side)	1/2 inch
FLARES	Pouch (left side)	1/2 inch
LIFE PRESERVER INFLATABLE, AUTOMATIC LPU-23B(V)1/P PART NO. **WARNING** AUTOMATIC INFLATION DEVICE INSTALLED FOR USE IN EJECTION SEAT AIRCRAFT ONLY	Center of casing waist section (inside)	3/16 inch 1/4 inch 3/16 inch
LIFE PRESERVER INFLATABLE, AUTOMATIC LPU-23B(V)1/P PART NO **WARNING** AUTOMATIC INFLATION DEVICE INSTALLED FOR USE IN EJECTION SEAT AIRCRAFT ONLY	Center of casing waist section (inside)	3/16 inch 1/4 inch 3/16 inch
WARNING AUTOMATIC INFLATION DEVICE INSTALLED FOR USE IN EJECTION SEAT AIRCRAFT ONLY	Right and Left side of waist casing (outside) collar lobe casing (outside)	1/4 inch 3/16 inch

Notes: 1. Replacement markings shall be stamped or stenciled using waterproof black ink.

3. Hold inflator steady. Slowly exert a 25-pound straight pull on webbing. All snap fasteners should release at or before 25 pounds.

4. If all snap fasteners do not release at or before the 25 pound limit, inspect male and female snap fasteners for damage. Replace the entire beaded inflation handle assembly if required and repeat steps 1 through 4.

5. If all the snap fasteners release properly, leave the pull scale attached, add an additional 25 pound force to check the security of the beaded handle attachment to the inflation lanyard. Examine inflation lanyard for frays, ruptures, thin spots, split casing, and security of knots. If unsatisfactory, replace entire beaded inflation handle. Refer to paragraph 27-75.

6. Ensure that packaging cord loop is not pinched between piercing pin and actuating lever. If there is free play in the actuating lever when it is in its cocked position, the packaging cord loop is pinched. If necessary, reinstall in accordance with paragraph 27-77.

27-47. LEAKAGE TEST. All life preservers shall be subjected to a leakage test each Calendar/Phase Inspection. To perform a leakage test proceed in accordance with paragraph 27-48.

27-48. TEST FIXTURE. A suggested test fixture, consisting of a three-way valve, pressure gage, and adapters for compartments being tested, is shown in Chapter 3. Fixtures must be fabricated to meet the requirements of the schematic shown in figure 27-6.

27-49. TEST PROCEDURE. To test life preservers, proceed as follows:

Support Equipment Required

Quantity	Description	Reference Number
1	Test Fixture (or equivalent)	See Chapter 3

CAUTION

Ensure test area is free of foreign objects.

1. Ensure all carbon dioxide has been removed from any preserver which has been functionally tested.

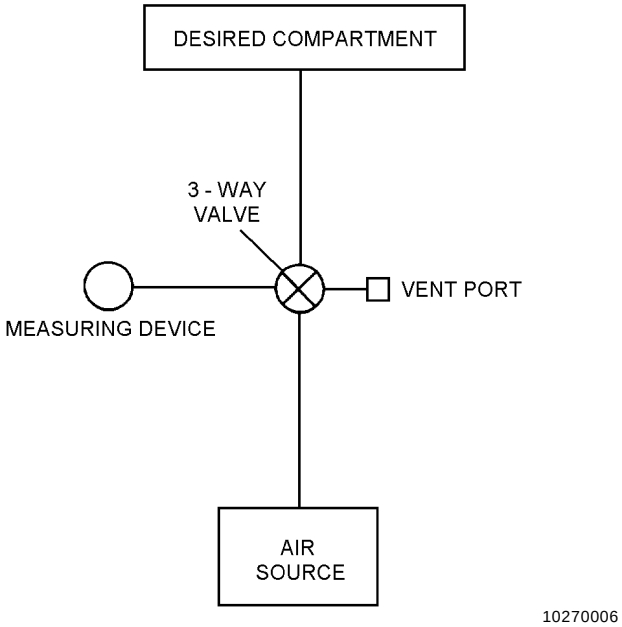

Figure 27-6. Test Fixture Schematic

CAUTION

If 3-way valve is not used, measuring device valve must be closed when air feed valve is open.

Damage may occur to oral inflation valve if air supply pressure entering the life preserver exceeds ten (10) psi during this test.

NOTE

If a suitable air source is not available, water-pumped nitrogen (BB-N-411) may be substituted.

2. Unlock oral inflation valve and insert into rubber hose. Rotate valve to air supply position and inflate chamber. Alternately position valve between measuring device, vent and air supply until proper pressure of 2.0 psig is attained in both chambers.

3. The air supply shall be securely shut off and after a minimum of 15 minutes, the pressures shall be readjusted, if necessary, to the leakage test pressures. Record time.

4. Disconnect air supply and check for leaks. Ensure all valves are closed.

5. Record temperature and barometric pressure.

6. After a minimum of 4 hours after completing step 3, record test pressure of both chambers. Test pressure shall not decrease to less than 1.6 psig for a life preserver chamber, from a maximum test pressure of 2.0 psig.

7. Record temperature and barometric pressure and correct test pressure for any changes in temperature and barometric pressure. Refer to tables 27-4 and 27-5.

EXAMPLE

UNCORRECTED TEST READING 1.70 PSI

	TEMP.	BARO.
START	75° F	29.90 IN. Hg
END	70° F	29.70 IN. Hg
DIFFERENCE	- 5° F	-0.20
CORRECTION	+0.155	-0.098

TEMP. CORRECTION	+ 0.155
+ BARO. CORRECTION	- 0.098
CORRECTION	+ 0.057

UNCORRECTED READING	1.700 PSI
+ CORRECTION	+ 0.057
CORRECTED READING	1.757 PSI

AA049007

Step 7 - Para 27-49

Table 27-4. Temperature Conversion Chart

Temperature Difference (°F)	Correction (psig)
1	0.031
2	0.062
3	0.093
4	0.124
5	0.155
6	0.186
7	0.217
8	0.248
9	0.279
10	0.310
Rise in temperature: subtract from gage reading. Fall in temperature: add to gage reading	

CAUTION

Do not submerge LPU-23B(V)1/P life preservers in water to check for leaks.

8. If pressure of chamber is below 1.6 psig inflate to leakage test pressure and coat with a soap solution to locate leaks. Mark leak areas. Rinse preserver with fresh water, air dry and repair in accordance with paragraph 27-65.

9. Deflate preserver in accordance with paragraph 27-37.

10. Ensure that inflation valve lever is cocked. Install CO_2 cylinder in accordance with paragraph 27-55.

27-50. RECORDS UPDATING. Make necessary entries on appropriate form in accordance with OPNAVINST 4790.2 Series.

27-51. CLEANING AND SERVICING.

27-52. Cleaning and servicing consist of cleaning the life preserver, case, container and/or pouch, installation of the inflation valve protective covers and CO_2 cylinders and, when required, safety wiring of the inflation valve actuating lever.

27-53. CLEANING OF LIFE PRESERVER CASINGS/BLADDERS. To clean life preservers, machine washing is preferred on casings, containers, and pouches. Alternate method is by hand. Remove any survival items and other detachable items and proceed as follows:

Materials Required

Quantity	Description	Reference Number
As Required	Detergent, General Purpose	MIL-D-16791 NIIN 00-282-9699
As Required	Cloth, Lint-Free Type II	MIL-C-85043 NIIN 00-044-9281
As Required	Talc, Technical	MIL-T-50036A NIIN 01-080-9589

Table 27-5. Barometric Pressure Conversion Chart

Press. Diff. (inHG)	Corr. (psi)	Press. Diff. (inHG)	Corr. (psi)	Press. Diff. (inHG)	Corr. (psi)	Press. Diff. (inHG)	Corr. (psi)	Press. Diff. (inHG)	Corr. (psi)
0.01	0.005	0.16	0.078	0.31	0.152	0.46	0.225	0.61	0.299
0.02	0.010	0.17	0.083	0.32	0.157	0.47	0.230	0.62	0.304
0.03	0.015	0.18	0.088	0.33	0.162	0.48	0.235	0.63	0.309
0.04	0.020	0.19	0.093	0.34	0.167	0.49	0.240	0.64	0.314
0.05	0.025	0.20	0.098	0.35	0.172	0.50	0.245	0.65	0.319
0.06	0.030	0.21	0.103	0.36	0.176	0.51	0.250	0.66	0.323
0.07	0.035	0.22	0.108	0.37	0.181	0.52	0.254	0.67	0.328
0.08	0.040	0.23	0.113	0.38	0.186	0.53	0.260	0.68	0.333
0.09	0.045	0.24	0.118	0.39	0.191	0.54	0.265	0.69	0.338
0.10	0.049	0.25	0.123	0.40	0.196	0.55	0.270	0.70	0.343
0.11	0.054	0.26	0.127	0.41	0.201	0.56	0.275	0.71	0.348
0.12	0.060	0.27	0.132	0.42	0.206	0.57	0.279	0.72	0.353
0.13	0.064	0.28	0.137	0.43	0.211	0.58	0.284	0.73	0.358
0.14	0.069	0.29	0.142	0.44	0.216	0.59	0.289	0.74	0.363
0.15	0.073	0.30	0.147	0.45	0.221	0.60	0.294	0.75	0.368

Rise in pressure: add to gage reading.
Fall in pressure: subtract from gage reading.

CAUTION

Solvents are not to be used in cleaning life preservers.

1. Prepare solution of detergent (MIL-D-16791) consisting of 1/4 to 1/2 ounce of detergent per gallon of water.

2. Apply cleaning solution to soiled area with a spray or sponge.

3. Allow solution to remain on surface for several minutes, then agitate with a soft brush or rag.

4. Rinse surface thoroughly with water; wipe with a cloth or sponge. Repeat this application until surface is free from all solution.

5. Dry casing before use and dry bladder with a lint-free cloth (MIL-C-85043). Apply a light coating of talc (MIL-T-50036A).

27-54. INSTALLATION OF INFLATION VALVE PROTECTIVE COVERS. To install inflation valve protective covers, proceed as follows:

1. Open life preserver flotation assembly, then position on a flat surface.

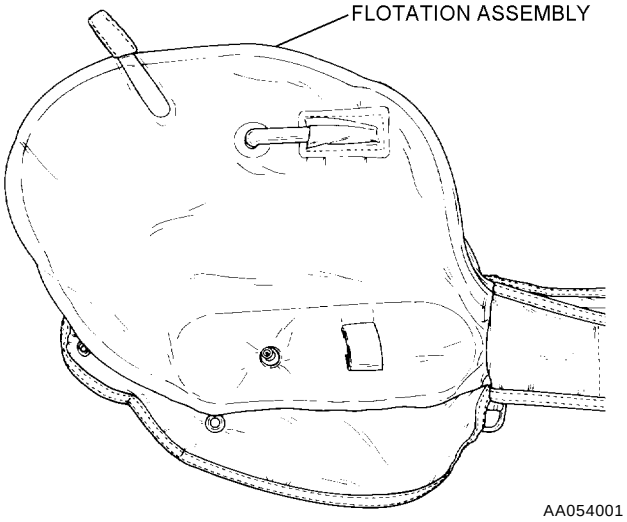

Step 1 - Para 27-54

2. Place inflation valve protective cover upon the life preserver. Ensure that inlet manifold stem hole and CO_2 cylinder holding loop hole are aligned according to figure 27-7.

27-55. INSTALLATION OF CO_2 CYLINDERS. To install CO_2 cylinders proceed as follows:

Support Equipment Required

Quantity	Description	Reference Number
1	Scale (Gram)	A-A-52021-1 NIIN 00-514-4117 or equivalent
1	Die, Cylinder Thread Chaser	1842-008-01 (CAGE 03688) NIIN 00-069-4040

Materials Required

Quantity	Description	Reference Number
As Required	Cylinder, CO_2 Type III, 35-Gram	MIL-C-25369
1	Seat Seal, O-Ring, Multi	NIIN 01-046-3300

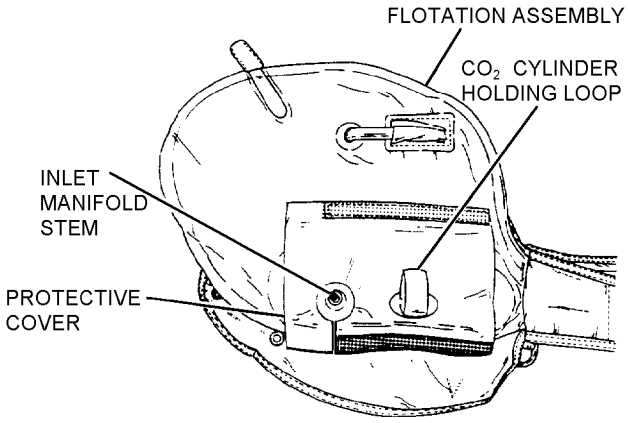

10270007

Figure 27-7. Installation of Inflation Valve Protective Cover

CAUTION

Ensure that packaging cord is not pinched between piercing pin and actuating lever. If there is free play in actuating lever when in its cocked position, packaging cord loop is pinched. If necessary, reinstall in accordance with paragraph 27-77.

1. Weigh a charged CO_2 cylinder and compare the minimum stamped weight with the scale weight. Discard and replace cylinder if scale weight is 2 grams less than minimum stamped weight.

2. To assure a firm cylinder seat, conduct a cylinder thread count. Threaded portion of cylinder neck shall contain a minimum of seven full threads to assure a firm cylinder seat within valve body. Any cylinder found with less than seven full threads shall be discarded. See figure 27-8.

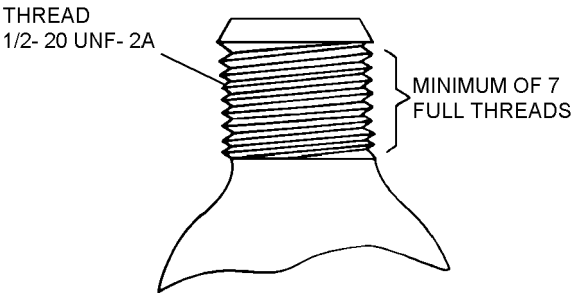

10270008

Figure 27-8. Cylinder Thread Count

CAUTION

Steel threads on CO_2 cylinder can cause damage to aluminum threads on inflator if cylinder is not carefully threaded. If binding occurs during installation on cylinder, use thread chaser dye on cylinder thread to cut free excessive plating. Reinstall cylinder. If binding still occurs, replace cylinder.

3. Using the cylinder thread chaser die, turn the thread chaser to the full extent of the threads on the CO_2 cylinder to cut free any excessive plating covering the threads.

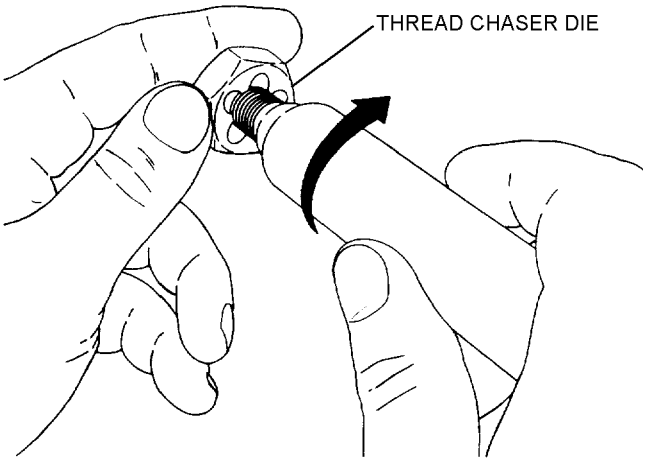

Step 3 - Para 27-55

NOTE

During intermediate inspection, inspect condition of O-ring and replace as necessary. After each functional inspection, the O-ring seal shall be replaced.

4. Insert new O-ring and turn CO_2 cylinder into inflator body as far as hand twisting will permit.

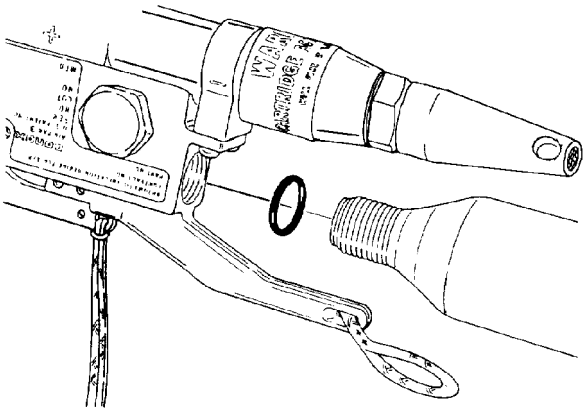

Step 4 - Para 27-55

NOTE

Check for secure cylinder fit and ensure that CO_2 cylinder passes through the CO_2 cylinder holding patch loop.

5. Close inflation valve protective covers; then secure with hook and pile tape provided.

27-56. BATTERY REPLACEMENT. To replace batteries, proceed as follows:

NOTE

Only FW14 batteries, part number 849AS103, NIIN 01-334-0724, requisitioned through the CAD/PAD ordering process are authorized for use in the FW98 Automatic Inflation Device. NAVSURFWARCENDIV Indian Head MD must approve substitute batteries in writing before installation.

Materials Required

Quantity	Description	Reference Number
2	Battery, 6-Volt Manganese Dioxide	849AS103 NIIN 01-334-0724 (FW14)

Support Equipment Required

Quantity	Description	Reference Number
1	Multimeter (Digital)	8600A or equivalent (CAGE 89536) NIIN 01-010-0088
1	Wrench, 3/4-Inch	—

WARNING

No foreign object should be inserted into sensor plug ports for any reason.

1. Remove sensor plug cap using a standard 3/4-inch wrench.

WARNING

Battery may explode if recharged or disposed of in fire.

CAUTION

Never replace one battery. Always replace the pair.

2. Remove old batteries and discard.

3. Refer to NAVAIR 11-100-1.1 for battery manufacture code dates. Record date of manufacture and date of installation of new batteries on appropriate form in accordance with OPNAVINST 4790.2 Series.

3A. Check new batteries for leakage, corrosion, dents, depressions, and cracks. If found the batteries shall be rejected.

3B. Inspect end of battery insulating sleeve that protrudes from battery compartment for cracks/tears. Replace battery insulating sleeves that have cracks and tears that continue into the battery compartment. Small defects that do not travel into the wall of the battery compartment are acceptable.

3C. Using multimeter set-up to measure dc voltage, check each battery for shorted casing. Place one lead on the positive terminal and the other on the battery case. If a voltage reading of 0.1 volts dc or higher is obtained, reject the battery for use and discard battery in an appropriate manner.

NOTE

Manganese Dioxide batteries (FW14) have a life of three years from the date of manufacture. Do not install battery if its life expires prior to the next scheduled Calendar Inspection.

4. Install batteries in accordance with figure 27-9.

5. Install sensor plug cap. Plug shall be held in square alignment with housing while engaging threads.

WARNING

Ensure that sensor plug cap is torqued to correct value. Do not overtighten sensor plug cap.

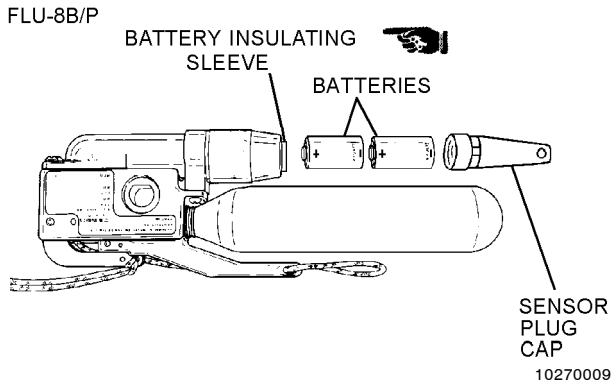

Figure 27-9. Battery Installation Arrangement

6. Torque FLU-8B/P sensor plug cap to 15 in-lb using 3/4-inch socket and torque wrench.

7. Test batteries in accordance with paragraph 27-42.

27-57. REPAIR/REPLACEMENT.

27-58. This section contains instructions for the repair or modification of various components or subassemblies of life preservers to ensure that appropriate items of equipment remain in Ready For Issue (RFI) status. Reference numbers for parts which are defective, corroded or worn and require replacement are included in the applicable paragraph of this section. Other replacement parts, such as carrying cases and personal survival equipment, are listed in the applicable table of each chapter. Procedures are applicable to the type life preserver described in parentheses following the title of the repair or modification, or before a step.

27-59. Replacement of easily removed assembly components such as CO_2 inflation valves and survival items are authorized in addition to repair and replacement procedures documented in this section. The life preserver shall be subjected to a functional and leakage test each time CO_2 inflation valves are removed and replaced for any reason, and each time inflation valve gaskets are replaced.

27-60. DETERMINATION OF REPAIRABILITY. Patching of holes, cuts, tears or punctures 1-inch square or less are the only repairs authorized in a life preserver bladder.

27-61. Life preserver shall be considered beyond repair for any of the following reasons:

1. Porous fabric areas on flotation bladder.

2. Leakage test failure resulting from other than repairable cut, tear or puncture.

3. Holes, cuts, tears or punctures within 1-inch of flotation bladder seams.

4. Deterioration of the rubberized fabric caused by oil, grease, or any other foreign substance.

5. Deterioration of the rubberized fabric caused by a heavily mildewed condition.

27-62. CASING REPAIR PROCEDURES. To repair casings, proceed as follows:

Materials Required

Quantity	Description	Reference Number
As Required	Thread, Nylon, High Temperature Resistant, Sage Green	MIL-T-83193 NIIN 00-405-2252
	-or-	
As Required	Thread, Nylon, Type II, Size E, Sage Green	V-T-295 NIIN 00-204-3884
As Required	Cloth, Nylon, Polychloroprene-coated, Type I, Sage Green	MIL-C-83429 NIIN 01-147-2064
As Required	Tape, Hook, Sage Green, Type II	MIL-F-21840 NIIN 00-405-2266
As Required	Tape, Pile, Sage Green, Type II	MIL-F-21840 NIIN 00-405-2263

1. Minor holes, rips, tears, or abrasions in casing assembly may be repaired if they do not exceed 2 inches.

2. Repair or replace loose or damaged hook and pile tape as required.

3. Remove bladder in areas being repaired.

4. For all repairs plus loose or broken stitching use 6 to 8 stitches per inch and back stitch one half inch.

5. Casing assembly worn beyond economical repair shall be discarded.

27-63. CASING GROMMET REPLACEMENT PROCEDURES. To replace casing grommet, proceed as follows:

Support Equipment Required

Quantity	Description	Reference Number
1	Punch, Cutting, 3/16″	3GGG-P-833 NIIN 00-180-0941
1	Pencil, Solder	W-S-570 NIIN 00-204-3855

Materials Required

Quantity	Description	Reference Number
1″	Tape, Nylon, Sage Green, 1″ Wide	MIL-T-5038 NIIN 00-753-6144
	-or-	
1 1/2″ X 1 1/2″	Cloth, Nylon, Polychloroprene-coated, Type I Sage Green	MIL-C-19002 NIIN 00-935-1759
2	Grommet, Brass, Size 00	MS20230B20 NIIN 00-291-0302

1. Remove bladder in areas being repaired.

2. Remove loose grommet.

3. Reinforce worn grommet hole in casing by using either nylon tape or aramid cloth.

a. Prepare reinforcing material.

(1) Cut and sear edges of a 1″ piece of nylon tape

or

(2) Cut a 1 1/2″ X 1 1/2″ piece of aramid cloth and fold under 1/4″ on all edges.

b. Sew reinforcing material to outside of casing, centered where possible over original grommet location. Use a cross boxstitch with 6 to 8 stitches per inch, 1/8 inch from edge.

4. Install new grommet.

a. Locate original grommet hole. Cut hole in reinforcing material using 3/16″ cutting punch.

b. (For nylon tape only.) Carefully sear hole to prevent fraying using solder pencil.

c. Install grommet using 00 grommet setter and base.

27-64. CEMENTING LIFE PRESERVERS. All cementing of life preservers shall be performed as follows:

NOTE

Toluene shall be the primary solvent used in the fabrication or repair of this assembly. MEK may be used if toluene is not available. Always use sparingly and wipe up excess solvents; do not allow to dry by evaporation.

Support Equipment Required

Quantity	Description	Reference Number
1	Roller, Wooden	GGG-R-00620 NIIN 00-243-9401

Materials Required

Quantity	Description	Reference Number
1	Brush, Disposable	NIIN 00-514-2417
As Required	Toluene	TT-T-548 NIIN 00-281-2002
	-or-	
As Required	Methyl Ethyl Ketone (MEK)	TT-M-261 NIIN 00-281-2762
As Required	Cement. Class 3, Polychloroprene	MIL-A-5540 NIIN 00-142-9913
As Required	Talc, Technical	MIL-T-50036A NIIN 01-089-9589

WARNING

Do not use toluene or MEK near open flame, heat or electrical sparks. Avoid prolonged contact with skin or breathing of fumes. Use only in a well ventilated area.

CAUTION

Use only Polychloroprene adhesives and Polychloroprene-coated cloth patches on Polychloroprene-coated LPU-23B(V)1/P life preserver assemblies.

NOTE

Toluene or MEK must be applied vigorously to life preserver material over three years old in order to reactivate the material prior to cementing. Pigment from the material coloring staining a cloth rubbed over the treated surface will indicate the material has been reactivated. Cement shall be applied immediately after the surface has dried.

1. Clean both surfaces to be cemented with four applications of toluene or MEK. Apply toluene or MEK with back-and-forth strokes on the first and third applications, and one-way strokes on the second and fourth applications. Allow area to dry between applications.

CAUTION

The effective active period of adhesive mixture composed of polychloroprene and an accelerator is eight (8) hours. Do not use mixture if older than eight hours.

2. Prepare only enough mixture for 8 hours. Dispose of any remaining mixture.

3. Using a disposable brush, apply cement to completely cover surfaces to be cemented. Use long, one direction strokes and complete each surface before cement becomes tacky as the brush may pull tacky cement from the surface. Allow to dry for 10 minutes.

4. Apply a second coat of cement as in step 3. Use brush strokes perpendicular to the original direction.

5. When second coat of cement has become tacky, place pieces together. If cemented area has a cut or tear, butt edges of damage before applying patch. Roll out bubbles with a wooden roller.

6. Allow cement to cure a minimum of 48 hours.

7. Dust area with talc (MIL-T-50036A).

27-65. PATCHING LIFE PRESERVERS. Life preserver is not repairable if there are holes, cuts, tears, or punctures over one-inch square. Patching of life preserver shall be performed as follows:

CAUTION

Use only Polychloroprene adhesives and Polychloroprene-coated cloth patches on Polychloroprene-coated LPU-23B(V)1/P life preserver assemblies.

Materials Required

Quantity	Description	Reference Number
As Required	Cloth, Nylon, Polychloroprene-coated, Type I Sage Green	MIL-C-19002 NIIN 00-953-1759

NOTE

Select patch color as near as possible to color of life preserver being repaired.

1. Cut a rounded patch 1 inch larger than damage on all sides.

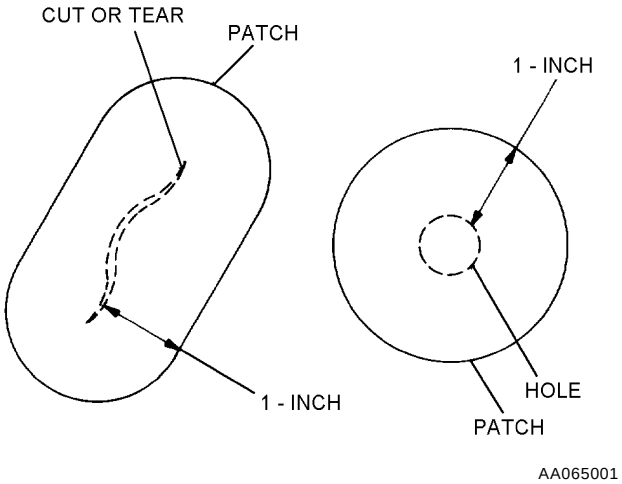

Step 1 - Para 27-65

2. Center patch over damage and trace an outline of patch on fabric.

3. Cement patch to damaged area in accordance with paragraph 27-64.

4. Dust area with talc (MIL-T-50036A).

5. Perform a leakage test.

27-66. INSPECTION RECORD PATCH.

NOTE

The 28th In-Service Management Panel meeting for Aviation Life Support Systems rescinded the requirement for the packer to sign the Inspection Record Patch on life preservers. The requirement for all other documentation remains unchanged. The reason for this change is that most history patches are unreadable and the packer's and inspector's names are documented on Aviation Crew Systems Records.

27-67. REPLACEMENT OF ORAL INFLATION VALVE. To replace the oral inflation valve, proceed as follows:

NOTE

Replacement oral inflation valves can only be obtained through salvage of BCM'ed or surveyed inflatable survival equipment.

Materials Required

Quantity	Description	Reference Number
1	Valve, Oral Inflation	—
As Required	Cement, Polychloroprene	MIL-A-5540 NIIN 00-142-9913
As Required	Brush, Disposable	NIIN 00-514-2417
As Required	Toluene	TT-T-548 NIIN 00-281-2002
	-or-	
As Required	Methyl Ethyl Ketone (MEK)	TT-M-261 NIIN 00-281-2762

CAUTION

Only toluene or MEK shall be used to clean oral inflation valve and tube. Only Polychloroprene cement (MIL-A-5540, NIIN 00-142-9913) shall be used to cement oral inflation valve into oral inflation tube.

1. Carefully cut through metal band securing oral inflation valve to oral inflation tube and remove metal band and oral inflation valve.

2. If the tip of the oral inflation tube was damaged during removal of valve, trim off damaged section.

3. Clean both surfaces to be cemented with toluene or MEK. Allow those areas to dry.

4. Using a small disposable brush, carefully apply a small amount of Polychloroprene cement to the surfaces of the tube and the valve which are to be cemented together.

5. Immediately place the oral inflation valve into oral inflation tube. Oral inflation valve should be inserted up to valve shoulder. Inspect for proper application/cement.

6. Tightly wrap the cemented portion of the oral inflation tube with cord or wire and allow to cure for 48 hours before removing wrap.

7. Perform leakage test in accordance with paragraph 27-47.

27-68. RECEMENTING OF BLADDER FIN SEAMS. This repair shall be performed only if the polychloroprene flotation bladder does not leak, that is, if only outer seam around bladder is split or separating. To recement a seam proceed as follows:

1. If fin seam is not leaking, recement open material surrounding flotation bladder in accordance with paragraph 27-64.

2. Perform a leakage test in accordance with paragraph 27-47.

NOTE

If bladder exhibits leakage from fin seam, bladder cell has ruptured. Dispose of life preserver after usable parts have been salvaged.

27-69. DELETED ■

Figure 27-10 Deleted.

Figure 27-11 Deleted. ■

THIS PAGE INTENTIONALLY LEFT BLANK.

27-70. FABRICATION OF SLIP-ON POCKETS FOR LIFE PRESERVER HARDWARE. To fabricate slip-on pockets for life preserver hardware, proceed as follows:

Materials Required

Quantity	Description	Reference Number
As Required	Cloth, Nylon, Polychloroprene-Coated, Type I Sage Green	MIL-C-19002 NIIN 00-953-1759
As Required	Thread, Nylon Size E	V-T-295 NIIN 00-204-3884

1. Cut two pieces of coated nylon cloth as shown.

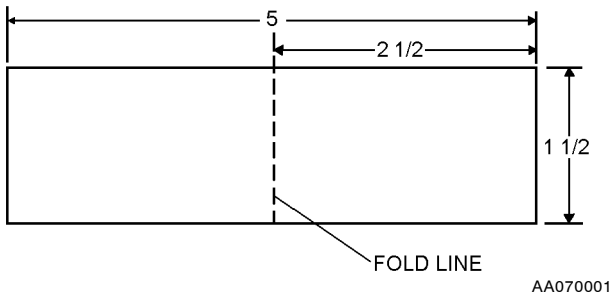

Step 1 - Para 27-70

2. Fold piece of cloth in half along fold line.

3. Sew two sides adjacent to fold forming a pocket. Use stitch type 301 stitching 8 to 10 stitches per inch.

4. Repeat steps 2 and 3 for other piece of cloth.

5. When packing life preserver, slip pockets over applicable pieces of hardware.

27-71. REPLACEMENT OF FLARE AND DYE MARKER POUCH SNAPHOOKS. To replace a broken snaphook, proceed as follows:

Materials Required

Quantity	Description	Reference Number
12 inches	Cord, Nylon, Type I	MIL-C-5040 NIIN 00-014-6699

1. Cut through ring portion of snaphook.

2. Remove snaphook and discard.

3. Pass end of cord through webbing loops on pouch and preserver ring.

4. Secure cord ends with binder knot, cut excess cord, and sear ends.

27-72. FLARE POUCH REPAIR. To repair flare pouch which will not close or is extremely difficult to close with flares installed, proceed as follows:

Materials Required

Quantity	Description	Reference Number
As Required	Thread, Nylon, Size E	V-T-295 NIIN 00-204-3884
2	Socket, Snap Fastener	MS27983-2 NIIN 00-945-2577
2	Cap, Snap Fastener	MS27983-1 NIIN 00-891-9073
3 1/2 inches	Webbing, Type VIII	MIL-W-4008

1. Remove both sets of sockets, caps, and pull tabs from pouch closure flap. Save pull tabs.

2. Position MIL-W-4008 Type VIII webbing on outside surface of pouch flap. Cut and sear webbing ends to match contour of flap end. Boxstitch webbing to flap using size E nylon thread (V-T-295). See figure 27-12.

3. Reposition both sets of sockets, caps, and pull tabs 3/8 inch closer to flap end. Use original pull tabs.

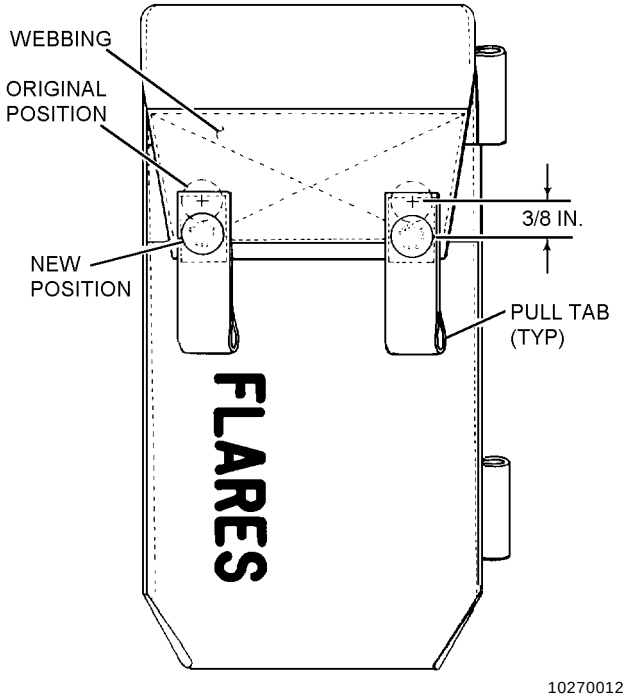

Figure 27-12. Flare Pouch Repair

27-73. DISASSEMBLY OF THE LIFE PRESERVER. To disassemble the life preserver for bladder or case repairs, proceed as follows:

NOTE

Life preserver shall be disassembled only to the extent necessary to perform required maintenance or inspection.

The uni-directional snap fastener socket is installed with the dot on its button oriented to the side of the fastener on which lift must be applied to disengage socket from the snap fastener stud.

1. Disengage uni-directional snap fasteners securing waist lobes to casing by applying lift on the dot-side snap fastener buttons.

2. Open casing and remove both inflation assemblies.

3. Reattach cap nuts to valve stems.

4. Release all hook and pile tape fasteners.

5. Fold collar lobe and waist lobes to width of casing.

6. Hold casing at collar and pull flotation assembly down and out of casing, one lobe at a time.

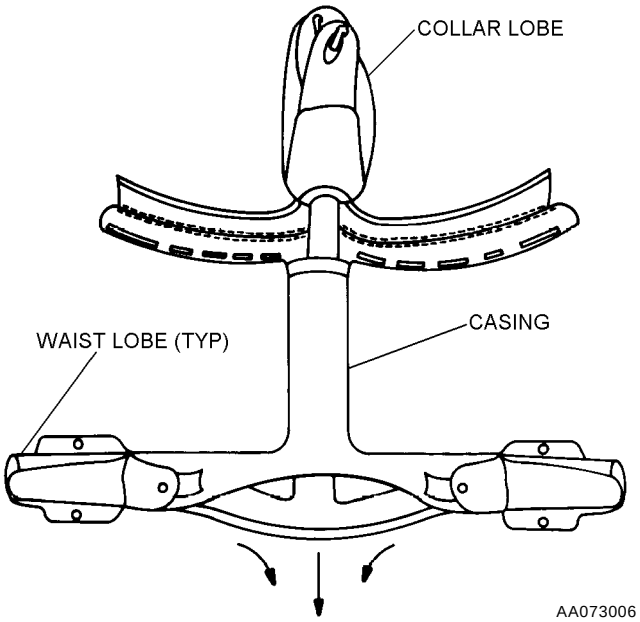

Step 6 - Para 27-73

27-74. REASSEMBLY OF THE LIFE PRESERVER. To reassemble the life preserver proceed as follows:

Materials Required

Quantity	Description	Reference Number
3 feet	Cord, Nylon, Type III	MIL-C-5040 NIIN 00-240-2146

Materials Required (Cont)

Quantity	Description	Reference Number
1	Valve Stem Kit (Note 1)	105AS100-6 (CAGE 30003) NIIN 00-113-8290

Notes: 1. Valve Stem Kit, P/N 105AS100-6, NIIN 00-113-8290, contains one top and one bottom gasket.

1. Attach one end of a 3-foot length of Type III nylon cord to snaphook on collar lobe.

CAUTION

Ensure flotation assembly is not twisted in casing channels.

2. Insert free end of nylon cord through back channel of casing and pull collar lobe into casing. Remove nylon cord from collar snaphook. Insert waist lobes through casing waist channels.

3. When flotation assembly is in casing assembly, ensure that it is in proper configuration and is not twisted inside casing.

4. Align uni-directional snap fastener sockets of flotation assembly waist lobe attachment patch with snap fastener studs of casing assembly and secure waist lobes to casing assembly.

5. Remove old inflation stem gaskets and replace with new gaskets. Reinstall inflation assemblies and protective covers. Pack life preserver in accordance with applicable paragraph.

27-75. REPLACEMENT OF BEADED INFLATION HANDLE ASSEMBLY. To replace the beaded inflation handle, proceed as follows:

Materials Required

Quantity	Description	Reference Number
As Required	Handle, Beaded, Inflation	975AS121-11 NIIN 01-120-4752 (CAGE 30003)
As Required	Thread, Nylon, Size E	V-T-295 NIIN 00-204-3884

1. Open snap fastener on locking pin cover; then cut and remove safety tie securing eye of locking pin to retaining loop. Carefully remove locking pin from pin keeper and retaining loop.

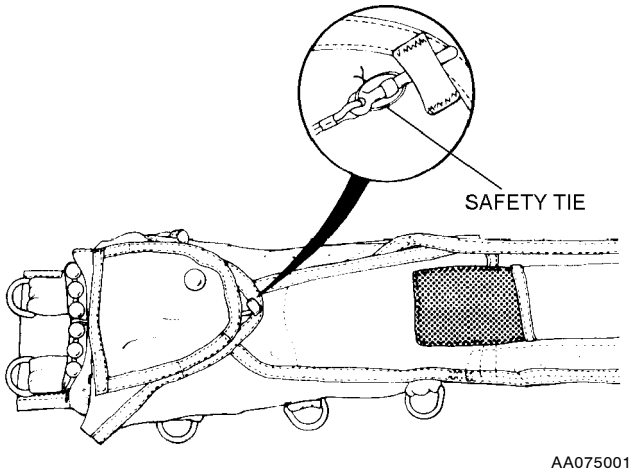

Step 1 - Para 27-75

2. Open flaps and unfold life preserver assembly.

3. Remove CO_2 cylinder from CO_2 inflator assembly. Retain CO_2 cylinder for reinstallation.

4. Remove inflation lanyard from inflator assembly; then unsnap beaded inflation handle from life preserver casing.

5. Secure new beaded handle inflation lanyard to actuating lever by passing lanyard through grommet in bottom casing flap and through hole in end of actuating lever. Pass lanyard back through grommet in bottom casing flap and form lark's head knot.

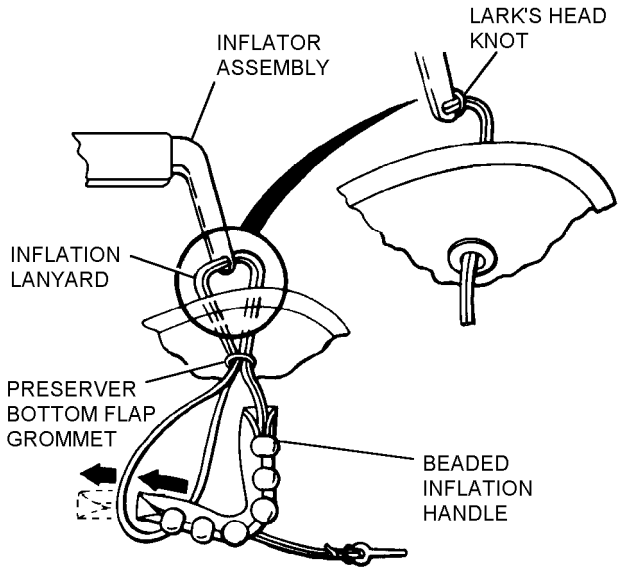

AA075005

Step 5 - Para 27-75

6. Fasten beaded inflation handle to casing with snap fasteners provided; then safety-tie beaded inflation handle with one turn of size E nylon thread, single. Draw thread sufficiently to permit 1/2-inch ± 1/8-inch space between the middle beads and webbing on the preserver. Tie ends of both safety ties with a surgeon's knot followed by a square knot.

NOTE

Ensure that overhand knot on locking pin lanyard is within 3/4 inch from eye of pin.

7. Route locking pin under outboard flap cover panel and through No. 3 spur grommet.

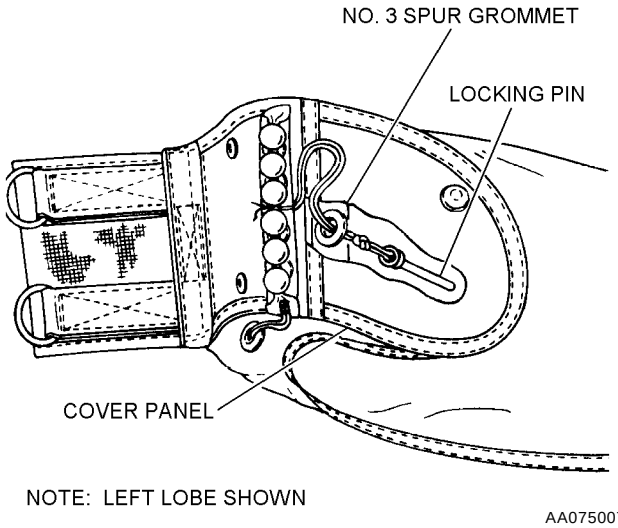

AA075007

Step 7 - Para 27-75

NOTE

On some late issue LPU-23C/P life preserver casings, the No. 3 spur grommet has been deleted.

8. Route the locking pin under the locking pin cover flap through the opening in the stitching at the base of the flap, through the retaining loop/packaging cord loop, and under the pin keeper loop.

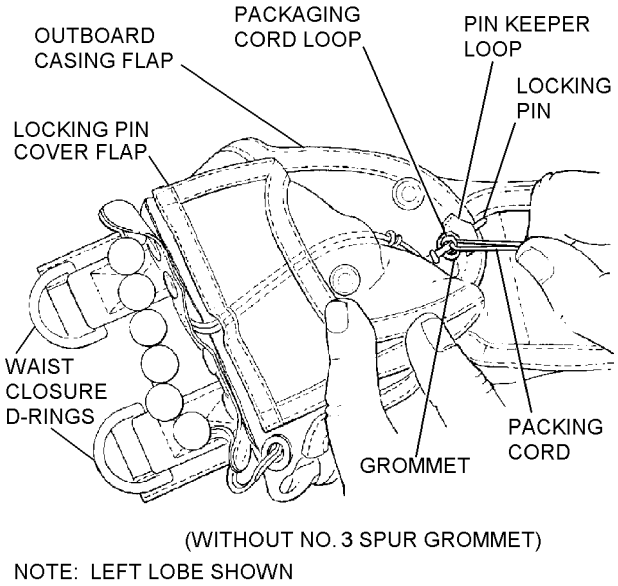

AA075008

Step 8 - Para 27-75

9. Perform beaded inflation handle pull test. Refer to paragraph 27-46.

10. Recock CO_2 inflator and install CO_2 cylinder.

NOTE

Ensure that all hook and pile tapes are securely mated.

11. Pack life preserver in accordance with the applicable paragraph.

12. Make necessary entries on appropriate form in accordance with OPNAVINST 4790.2 Series.

NOTE

FLU-8A/P Automatic Inflators shall be replaced with FLU-8B/P Automatic Inflators if found in service during scheduled maintenance.

27-76. REPLACEMENT OF FLU-8B/P AUTOMATIC INFLATOR ASSEMBLY. To replace damaged, overage, or spent FLU-8B/P automatic inflator, proceed as follows:

Support Equipment Required

Quantity	Description	Reference Number
1	Socket, 9/16-inch, 6-point, or 13-mm, 6-point	—
1	Wrench, Torque	—

Materials Required

Quantity	Description	Reference Number
1	Cylinder, CO_2 Type III, 35 Grams	MIL-C-25369
As Required	Thread, Nylon, Size A, Type I or II	V-T-295 NIIN 00-204-3803

Materials Required (Cont)

Quantity	Description	Reference Number
1	FLU-8B/P Automatic Inflation Device consisting of:	NIIN 01-364-4089 849AS153 (CAGE 30003)
1	Inflator Subassembly	1612-009 (CAGE 03688)
1	Sensor Plug Cap Assembly	P/N 1813-044-02 (CAGE 03688)
1	Valve Stem Kit (Note 1)	105AS100-6 (CAGE 30003) NIIN 00-113-8290
1	Seat Seal, O-Ring, Multi	NIIN 01-046-3300
1	Packaging Cord	NIIN 01-066-3357 1138-003-01 (CAGE 03688)
1	Sleeve, Battery Insulating (Note 2)	1122-095

Notes: 1. Valve Stem Kit, P/N 105AS100-6, NIIN 00-113-8290, contains one top and one bottom gasket.

2. The battery insulating sleeve is not a stocked item. After installation directed by Aircrew Systems Bulletin 976, it becomes part of the FLU-8B/P Unit. Replacement sleeves are issued by Indian Head Division, NSWC.

WARNING

The FLU-8A/P or FLU-8B/P automatic inflator is a cartridge-activated device and will fire if immersed in fresh or salt water. This device is to be installed only on life preservers used by aircrewmembers in ejection seat type aircraft.

1. Remove CO_2 cylinder from inflator.

2. Remove inflation lanyard from inflation actuating lever; then remove damaged, overage, or spent automatic inflation assembly.

NOTE

The following component parts may be reused and retained as spares: sensor plug cap, CO_2 cylinder, packaging cord loop, and cap nut.

3. Handle damaged or spent FLU-8B/P inflators in accordance with Federal Regulation 49, CFR 173.55.

4. Examine inflation actuating lever, beaded handle, inflation lanyard, nylon locking pin, sensor plug cap, and packaging cord loop for fraying, corrosion, stripped threads, and other damage.

5. Remove beaded handle inflation lanyard from actuating lever by removing lark's head knot. Retain beaded inflation handle for reinstallation.

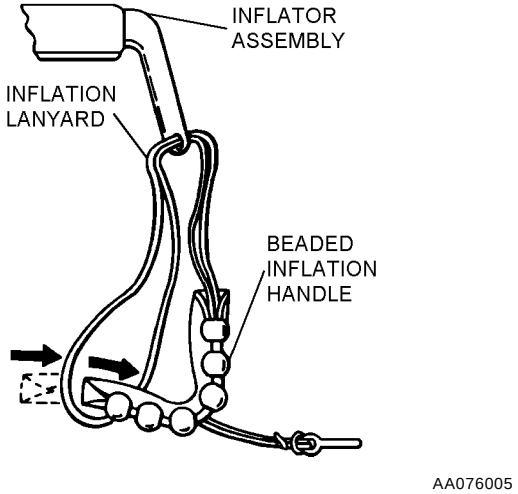

Step 5 - Para 27-76

6. Operate manual actuating lever three or four times to ensure that lever moves freely. Check to ensure that piercing pin moves freely inside valve body and goes through center of packaging cord loop.

7. Ensure that packaging cord loop is not pinched between piercing pin and actuating lever. If there is free play in actuating lever when it is in its cocked position, packaging cord loop is pinched. If necessary, reinstall in accordance with paragraph 27-77.

8. Install protective cover onto life preserver assembly.

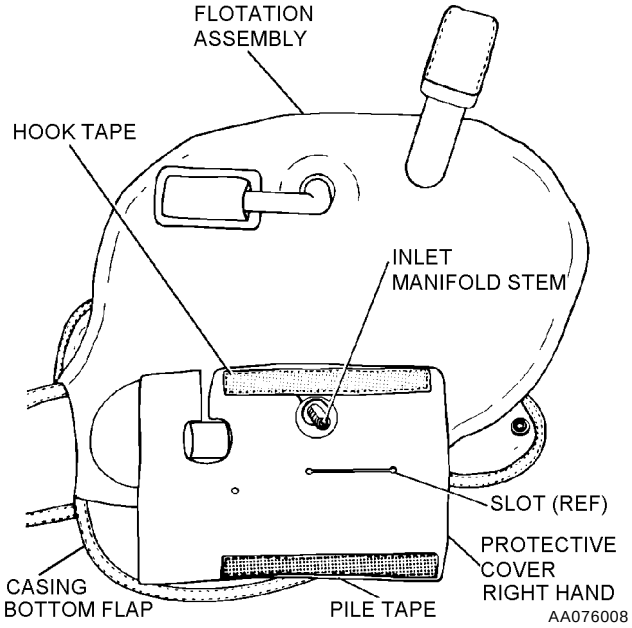

Step 8 - Para 27-76

9. Install beaded handle inflation lanyard to actuating lever by passing inflation lanyard through bottom flap grommet of life preserver assembly and FLU-8B/P protective cover. Then attach inflation lanyard to actuating lever by a lark's head knot.

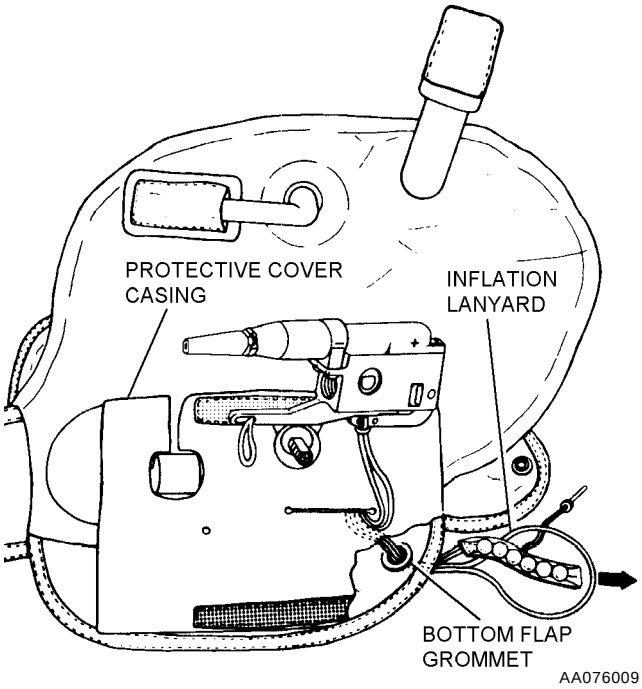

Step 9 - Para 27-76

10. Fasten beaded inflation handle to casing with snap fasteners provided.

11. Perform beaded inflation handle pull test in accordance with paragraph 27-46.

12. Replace beaded inflation handle to casing with snap fasteners; then safety-tie with size E nylon thread. Ensure that thread is drawn sufficiently to permit a 1/2-inch ±1/8-inch space between the middle beads and webbing on preserver.

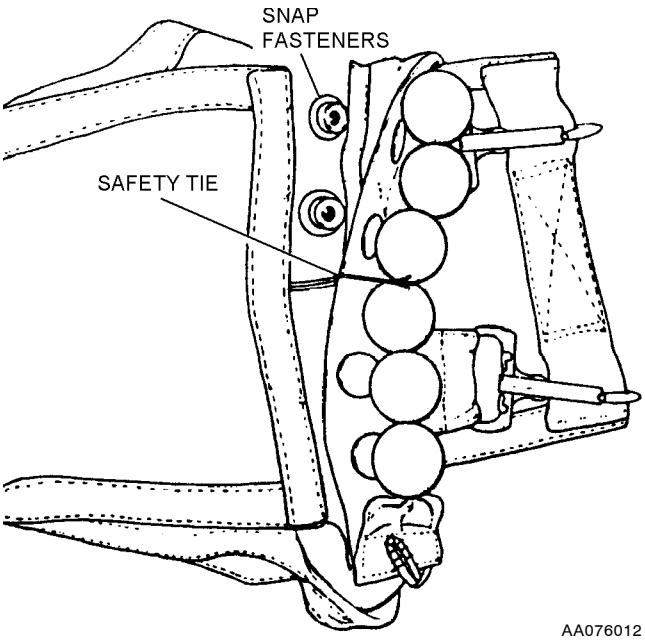

Step 12 - Para 27-76

13. Ensure that packaging cord is not pinched between piercing pin and actuating lever. If there is free play in the actuating lever when it is in its cocked position, packaging cord loop is pinched. If necessary, reinstall in accordance with paragraph 27-77.

14. Make necessary entries on appropriate form in accordance with OPNAVINST 4790.2 Series including:

a. Date of installation of each FLU-8B/P.

b. Date of manufacture of each FLU-8B/P. See figure 27-4.

c. Lot number of each FLU-8B/P. See figure 27-4.

d. Serial number of each FLU-8B/P.

e. Date of installation of batteries.

f. Date of manufacture of batteries. Refer to paragraph 27-41.

NOTE

For data on total life of the FLU-8B/P automatic inflation assembly, refer to NAVAIR 11-100-1.1. If total life expiration date occurs before date of next scheduled calendar inspection, replace inflator assembly. The manganese dioxide batteries used in the assembly have a total life of 3 years from the date of manufacture.

15. Install bottom gasket over manifold stem and position at manifold base. The bottom gasket has a smaller internal diameter than the top gasket.

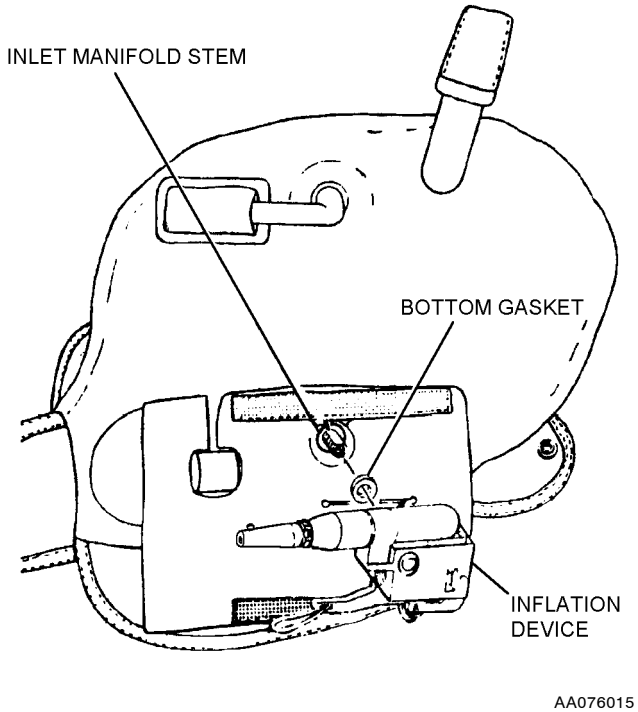

Step 15 - Para 27-76

16. Install FLU-8B/P inflator body on manifold stem.

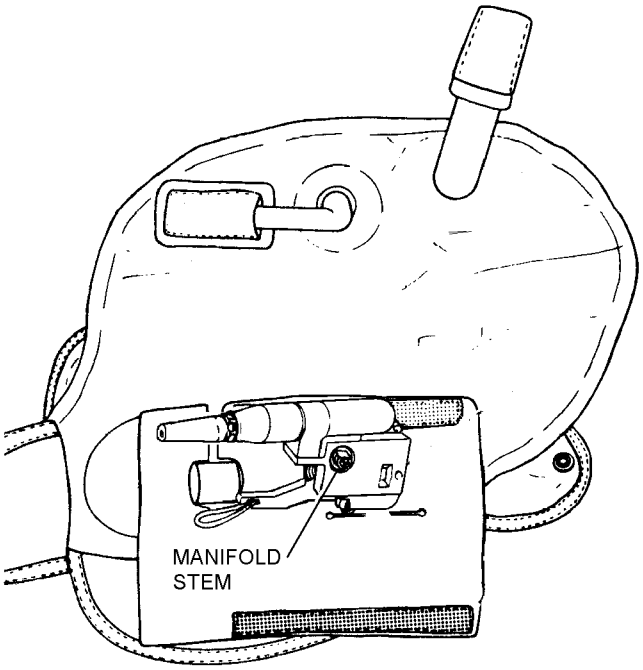

AA076016

Step 16 - Para 27-76

17. Install top gasket on manifold stem. Position on top of the inflator body.

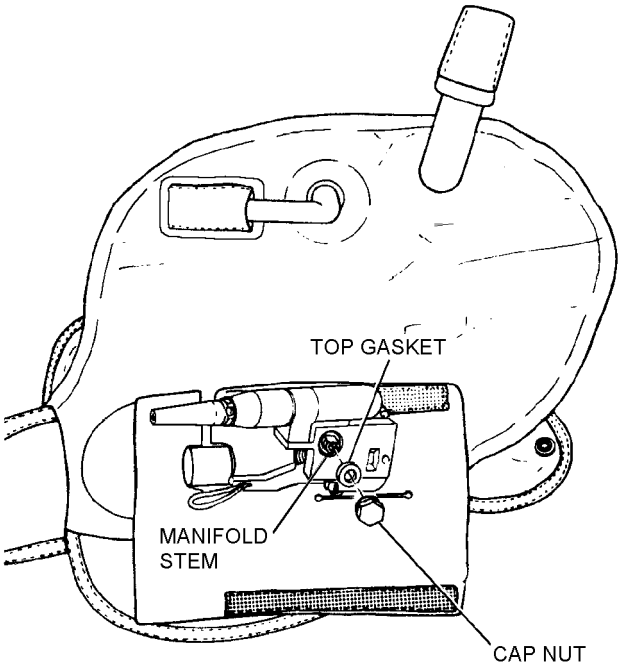

AA076017

Step 17 - Para 27-76

CAUTION

Valve stem may rotate if cap nut is over torqued.

18. Install cap nut on manifold stem, securing inflator to a torque value of 8 ±1 in-lb.

19. Install batteries in accordance with paragraph 27-56.

CAUTION

The functional test will be performed in the manual mode only. The automatic inflator (FLU-8B/P) may be operated an unlimited amount of times in the manual mode without affecting its automatic capability. Automatic actuation requires replacement of the inflation assembly.

NOTE

During intermediate inspection, inspect condition of O-ring and replace if necessary. After each functional inspection of the O-ring seal shall be replaced.

20. Install CO_2 cylinder in accordance with paragraph 27-55. Perform functional test in accordance with paragraph 27-36.

21. Deflate life preserver in accordance with paragraph 27-37, and remove spent CO_2 cylinder and O-ring.

22. Perform a leakage test in accordance with paragraph 27-47.

23. Install a 35-gram, Type III CO_2 cylinder in accordance with paragraph 27-55.

WARNING

The packaging cord loop must be routed under the manual actuating lever, under the valve guide arm, then up through the valve guide arm hole. (See figure 27-13.)

24. Ensure that packaging cord loop is routed as in figure 27-13.

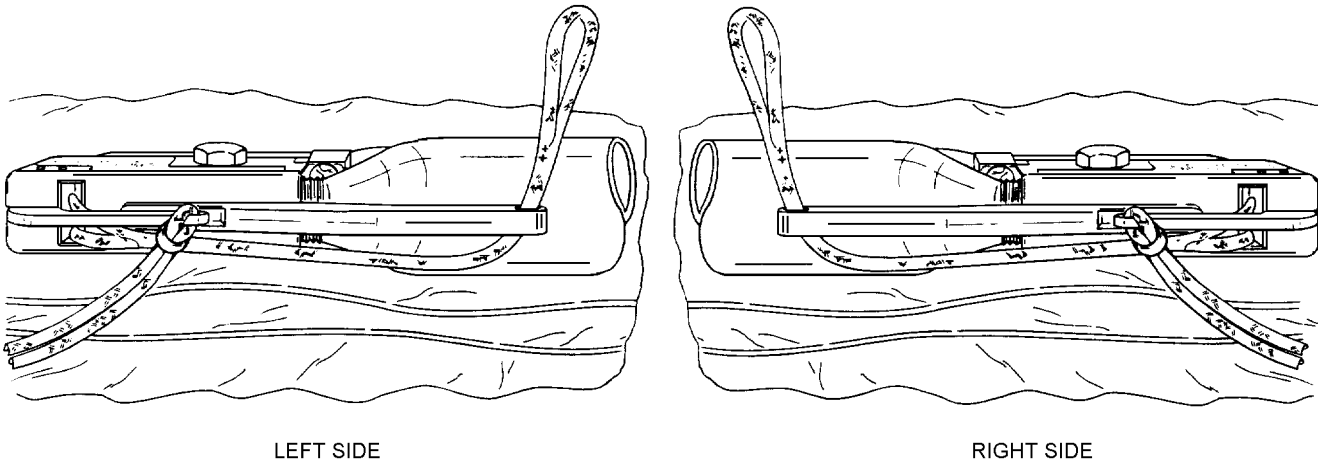

Figure 27-13. Packaging Cord Loop Routing

27-77. REPLACEMENT OF PACKAGING CORD ON THE FLU-8B/P AUTOMATIC INFLATOR. To replace packaging cord loop on the FLU-8B/P automatic inflator proceed as follows:

Materials Required

Quantity	Description	Reference Number
1	Screw, Retaining, Piercing Pin	1842-006-01 (CAGE 03688)
1	O-ring	MS28775-012 NIIN 00-005-0426
1	Packaging Cord	1138-003-01 (CAGE 03688) NIIN 01-066-3357

1. Remove CO_2 cylinder and O-ring from inflator.

2. Carefully remove inflator from life preserver.

3. Remove damaged cord.

4. Start the piercing pin retaining screw into the appropriate hole.

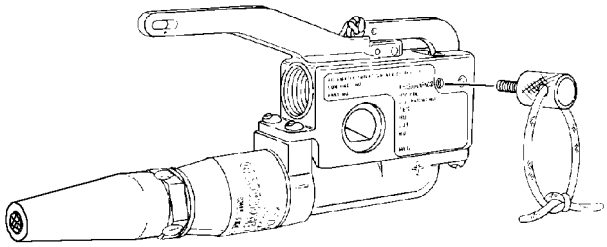

Step 4 - Para 27-77

5. Turn the screw until it just touches the piercing pin then back off one turn.

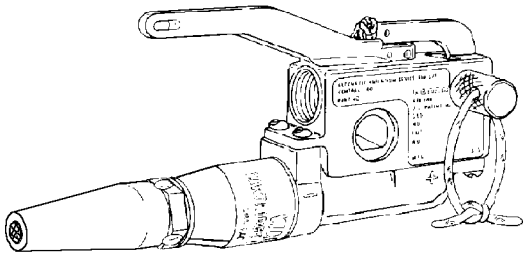

Step 5 - Para 27-77

6. Operate the actuating lever to its mid-actuated position.

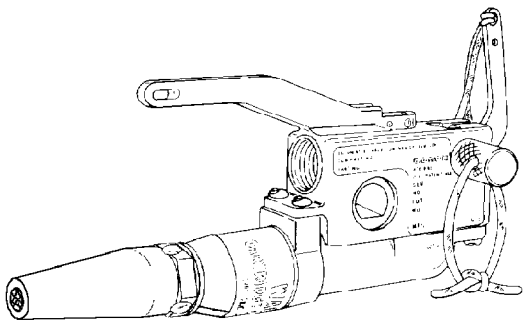

AA077006

Step 6 - Para 27-77

7. While holding the actuator lever in the mid-actuated position, tighten the retaining screw to hold the piercing pin in its full penetrating position.

8. Operate the actuating lever to its full actuated position.

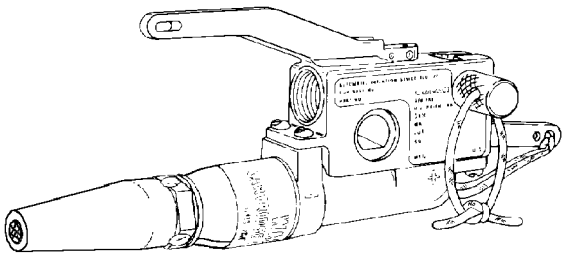

AA077008

Step 8 - Para 27-77

9. Insert the new packaging cord loop in the open lot on the inflator body.

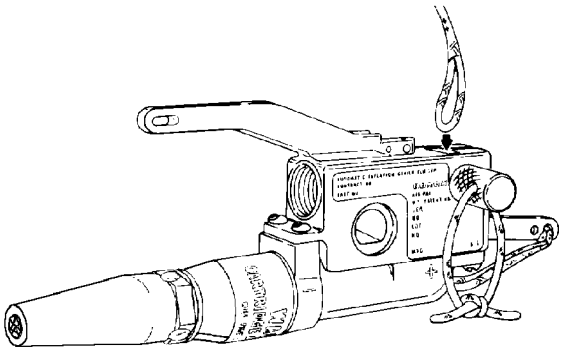

AA077009

Step 9 - Para 27-77

NOTE

There is an open slot on the opposite side of the body from the retaining screw hole. This slot may help in positioning the loop such that when the piercing pin, when released, will pass through the loop.

10. Operate the actuating lever to mid-actuating position. Remove the retaining pin, allowing the piercing pin to retract securing the loop.

11. Return actuating lever to normal position and ensure that actuating lever is properly cocked. If there is free play in actuating lever when it is in its cocked position, packaging cord loop is pinched. If necessary repeat steps 4 through 11 until actuating lever is properly cocked.

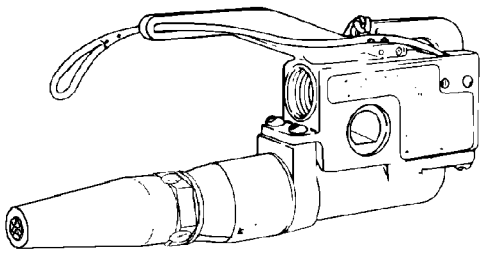

AA077011

Step 11 - Para 27-77

12. Replace inflator onto life preserver. Refer to paragraph 27-76.

13. Install new O-ring and charged CO_2 cylinder. Refer to paragraph 27-55.

14. Perform function test (refer to paragraph 27-36) and leakage test (refer to paragraph 27-47) and return to service.

CAUTION

The packaging cord loop is always routed under the guide arm and then up through the guide arm hole. See figure 27-13.

27-78. REPLACEMENT OF SENSOR PLUG CAP ASSEMBLY ON FLU-8B/P AUTOMATIC INFLATOR. To replace damaged or defective sensor plug cap, proceed as follows:

Support Equipment Required

Quantity	Description	Reference Number
1	Deep Socket, 3/4-inch	—
1	Wrench, Torque	—
1	Sensor Plug Cap Assembly	P/N 1813-044-02

WARNING

No foreign object should be inserted into sensor plug ports for any reason.

1. Remove damaged or defective sensor plug cap using a standard 3/4-inch wrench. See figure 27-14.

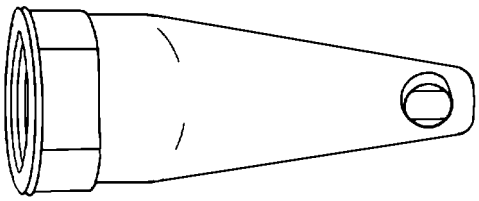

10270014

Figure 27-14. FLU-8B/P Sensor Plug Cap

2. Ensure replacement sensor plug spring is symmetrical in form and securely mounted.

3. Install new sensor plug cap. Plug shall be held in square alignment with housing while engaging threads. Ensure batteries are installed in accordance with paragraph 27-56.

4. Torque FLU-8B/P sensor plug cap to 15 lb-in using 3/4-inch socket and torque wrench.

5. Test batteries in accordance with paragraph 27-42.

27-79. REPLACEMENT OF TOP AND BOTTOM GASKETS. To replace the top and bottom gaskets on FLU-8B/P inflator, proceed as follows:

Materials Required

Quantity	Description	Reference Number
1	Valve Stem Kit (Note 1)	105AS100-6 (CAGE 30003) NIIN 00-113-8290

Notes: 1. Valve Stem Kit, P/N 105AS100-6, NIIN 00-113-8290, contains one top and one bottom gasket.

1. Remove cap nut and top gasket from inflator.

2. Remove inflator and replace bottom gasket.

3. Carefully place inflator onto valve stem.

4. Install top gasket onto valve stem.

CAUTION

Valve stem may rotate if cap nut is over torqued.

5. Tighten cap nut onto valve stem and torque to a value of 8 ±1 in-lb.

6. Perform functional and leakage tests on life preserver cell that was repaired. Refer to paragraphs 27-36 and 27-47.

27-80. REPLACEMENT OF PNEUMATIC INFLATOR VALVE (CHECK VALVE) ASSEMBLY.

To replace a defective check valve assembly, proceed as follows:

Support Equipment Required

Quantity	Description	Reference Number
1	Tool, Valve Core	8769A or equivalent (CAGE 27783)
1	Wrench, Torque	—

Materials Required

Quantity	Description	Reference Number
1	Valve, Pneumatic Inflator (Check Valve Assembly (Note 1))	Schrader-Bridgeport P/N 8457500047

Notes: 1. Schrader-Bridgeport P/N 8457500047 must be open purchased from:
Schrader-Bridgeport Intl
205 Frazier Rd
P.O. Box 668
Altivista, VA 24517
Phone (804) 369-8875

1. If not available, fabricate a valve core tool as shown in Chapter 3.

2. Remove inflator cap nut.

3. Insert valve core tool and unscrew check valve from valve stem.

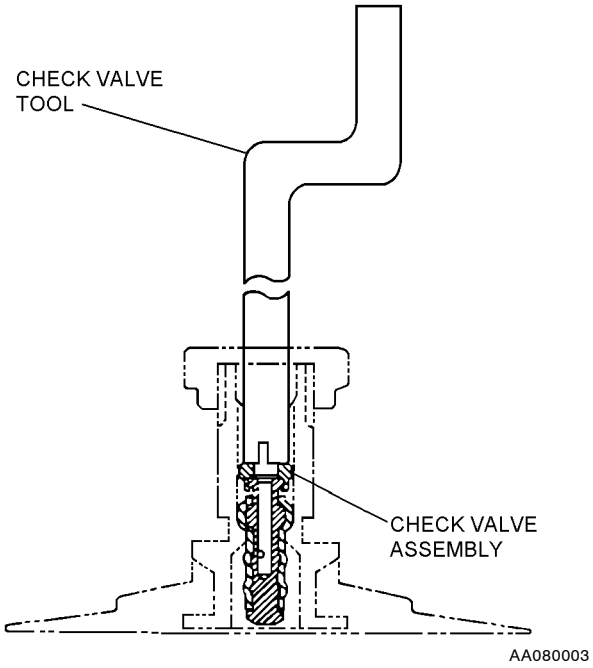

Step 3 - Para 27-80

4. Insert new check valve in valve stem and tighten with valve core tool hand tight.

CAUTION

Valve stem may rotate if cap nut is over torqued.

5. Replace cap nut and torque to a value of 8 ±1 in-lb.

6. Perform a functional and leakage test on life preserver cell that was repaired. Refer to paragraphs 27-36 and 27-47.

27-81. FABRICATION OF PROTECTIVE COVER ASSEMBLY. To fabricate a protective cover, proceed as follows:

Materials Required

Quantity	Description	Reference Number
17 X 6 inches	Cloth, Nylon, Polychloroprene-coated, Type I Sage Green	MIL-C-19002 NIIN 00-935-1759
12 X 5/8 inches	Fastener Tape, Hook, Type II	MIL-F-21840
12 X 5/8 inches	Fastener Tape, Pile, Type II	MIL-F-21840
As Required	Thread, Nylon, Type I or II, Size E	V-T-295 NIIN 00-204-3884

NOTE

Procedural step 1 is for a right protective cover and step 2 is for a left protective cover.

1. To fabricate a right protective cover, proceed as follows:

a. Cut an 8 1/2-inch length of coated nylon cloth.

b. Cut a 6-inch length of hook and pile tape and sew to the coated side of the coated nylon cloth. Use stitch type 301 stitching 8 to 10 stitches per inch.

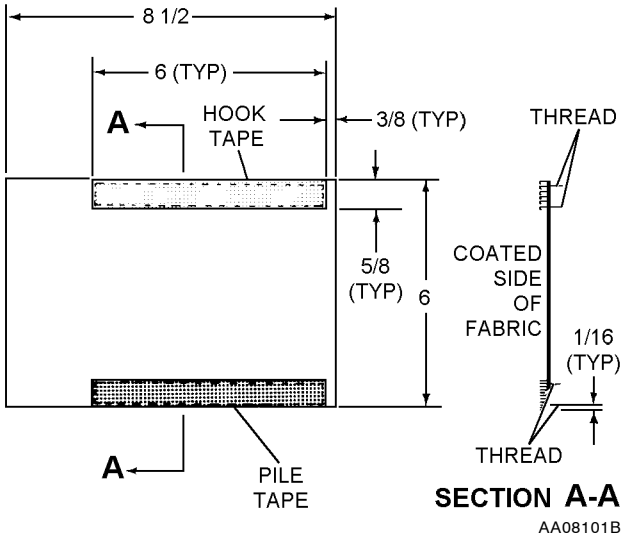

Step 1b - Para 27-81

c. Position coated nylon cloth, coated side up, over cutting board and punch a 1 7/16-inch diameter hole, a 1-inch diameter hole and three 3/8-inch diameter holes.

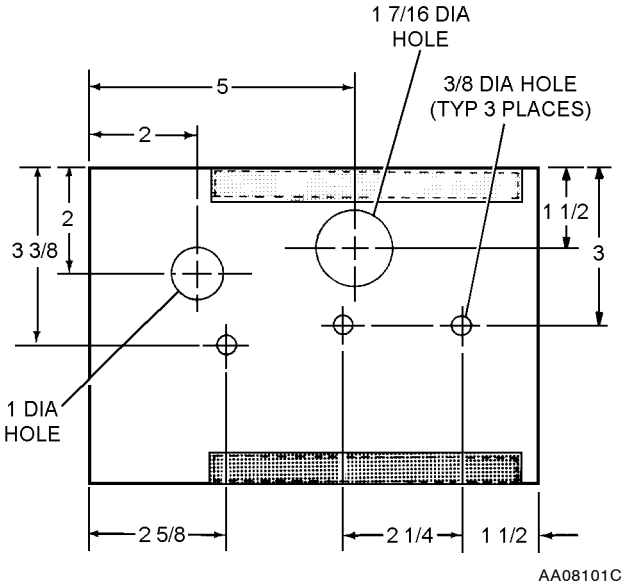

Step 1c - Para 27-81

d. Cut slit between two 3/8-inch diameter holes.

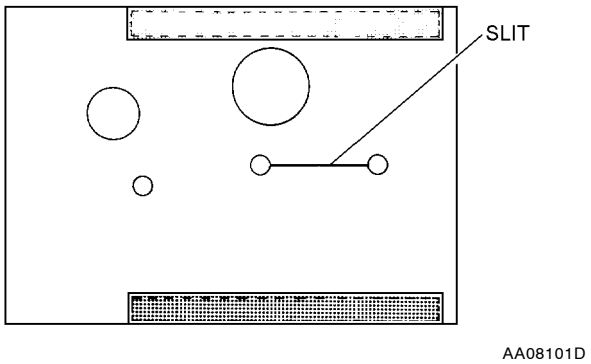

Step 1d - Para 27-81

2. To fabricate a left protective cover, proceed as follows:

a. Cut an 8 1/2-inch length of coated nylon cloth.

b. Cut a 6-inch length of hook and pile tape and sew to the coated side of the coated nylon cloth.

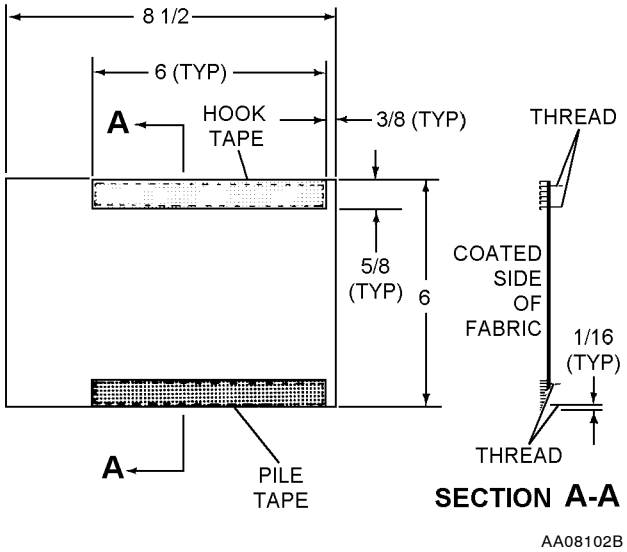

Step 2b - Para 27-81

c. Position coated nylon cloth, coated side up, over cutting board and punch a 1 7/16-inch diameter hole, a 1-inch diameter hole and three 3/8-inch diameter holes.

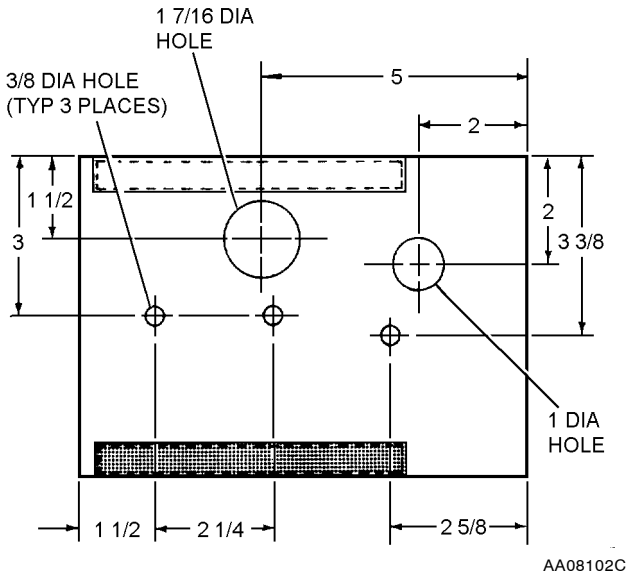

Step 2c - Para 27-81

d. Cut slit between two 3/8-inch diameter holes.

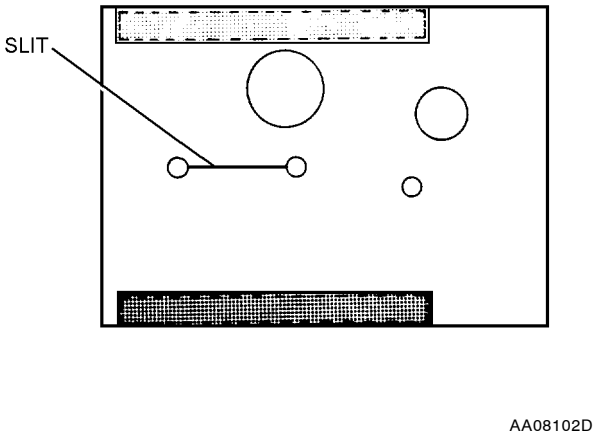

Step 2d - Para 27-81

27-82. FABRICATION OF COLLAR LOBE WEBBING LOOPS. To fabricate collar lobe webbing loops, proceed as follows:

Materials Required

Quantity	Description	Reference Number
18-inch Length	Webbing, Nylon, Type IV, 1-inch Width	MIL-T-5038 NIIN 00-261-8579 (CAGE 81349)
2	Post, Snap Fastener	MS27981-5B NIIN 00-250-6858 (CAGE 96906)
2	Stud, Snap Fastener	MS27981-4B NIIN 00-901-9660 (CAGE 96906)
2	Socket, Snap Fastener	M527981-3B NIIN 00-276-4966 (CAGE 96906)
2	Cap, Snap Fastener	M527981-1B NIIN 00-276-4954 (CAGE 96906)

Materials Required (Cont)

Quantity	Description	Reference Number
As Required	Thread, Nylon Type II, Size E	V-T-295 NIIN 00-204-3884

NOTE

All stitching shall be 10 to 12 stitches per inch, size E nylon thread.

1. Cut two 9-inch lengths of 1-inch wide nylon webbing and sear ends.

2. Sew one piece of webbing to outer side of each collar lobe casing in accordance with dimensions shown in figure 27-15.

3. Position and install snap fasteners in accordance with dimensions shown in figure 27-15, and ensure proper mate.

27-83. FABRICATION AND INSTALLATION OF LOCKING PIN COVER (LIFE PRESERVERS WITHOUT NO. 3 SPUR GROMMET). Fabricate and install the locking pin cover as follows:

CAUTION

Use only Polychloroprene adhesives and Polychloroprene-coated cloth patches on Polychloroprene-coated life preserver assemblies.

Materials Required

Quantity	Description	Reference Number
1	Socket, Snap Fastener	MS27981-3B NIIN 00-276-4966
1	Cap, Snap Fastener	MS27981-1B NIIN 00-276-4954
As Required	Cloth, Nylon Polychloroprene-coated, Type I Sage Green	MIL-C-19002 NIIN 00-935-1759

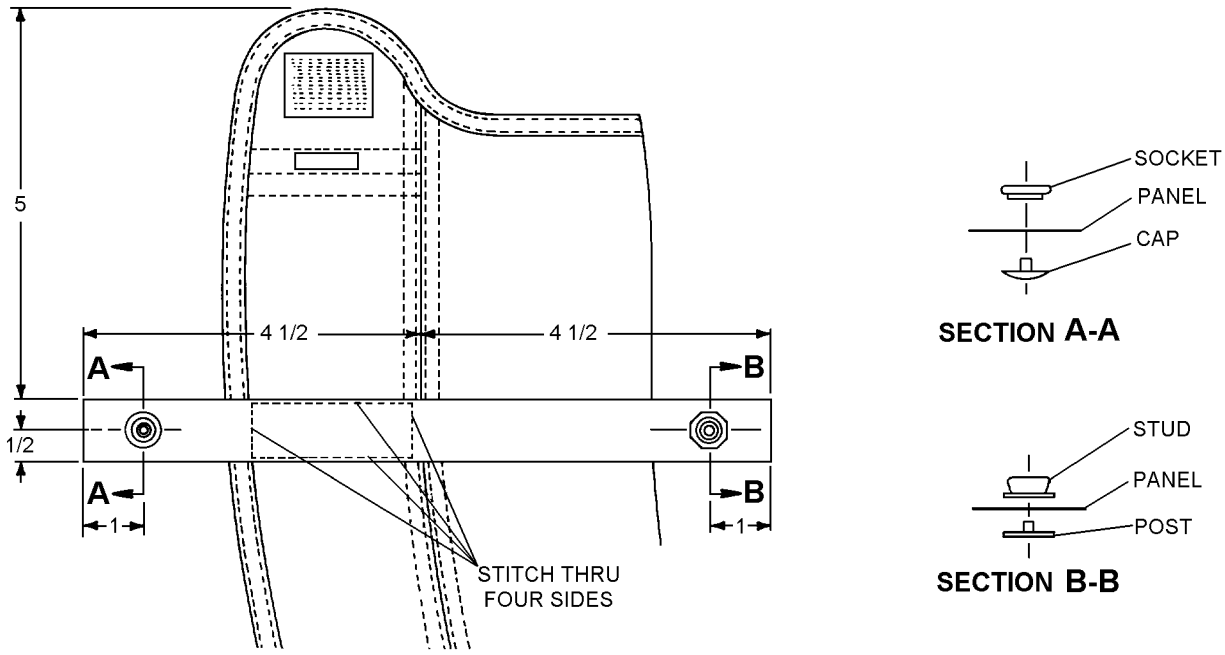

Figure 27-15. Addition of Webbing Loops

Materials Required (Cont)

Quantity	Description	Reference Number
As Required	Thread, Stitching, Nylon, Type I or II, Size E	V-T-295 NIIN 00-204-3884
As Required	Tape, Binding, Nylon, 3/4-inc Wide, Sage Green 1551 Type III	MIL-T-5038 NIIN 00-176-8083

1. Cut basic locking pin cover from coated cloth in dimensions shown in figure 27-16. Define form of locking pin cover using appropriate end of casing waist lobe assembly as pattern.

2. Reinforce fabric with single row stitching around entire perimeter of locking pin cover.

3. Apply 3/4-inch binding tape to perimeter of cover as shown in figure 27-16.

4. Align locking pin cover with mating surface of casing assembly and install in accordance with figure 27-17.

NOTE

Binding tape may be in one continuous strip or two sections.

5. Mark snap fastener position and install locking pin cover, snap fastener socket and button.

NOTE

When properly aligned with casing assembly, the straight edge of locking pin cover will be butted 1/8 inch from edge of beaded inflation handle snap fastener stud installation (casing main panel subassembly).

27-84. Deleted.

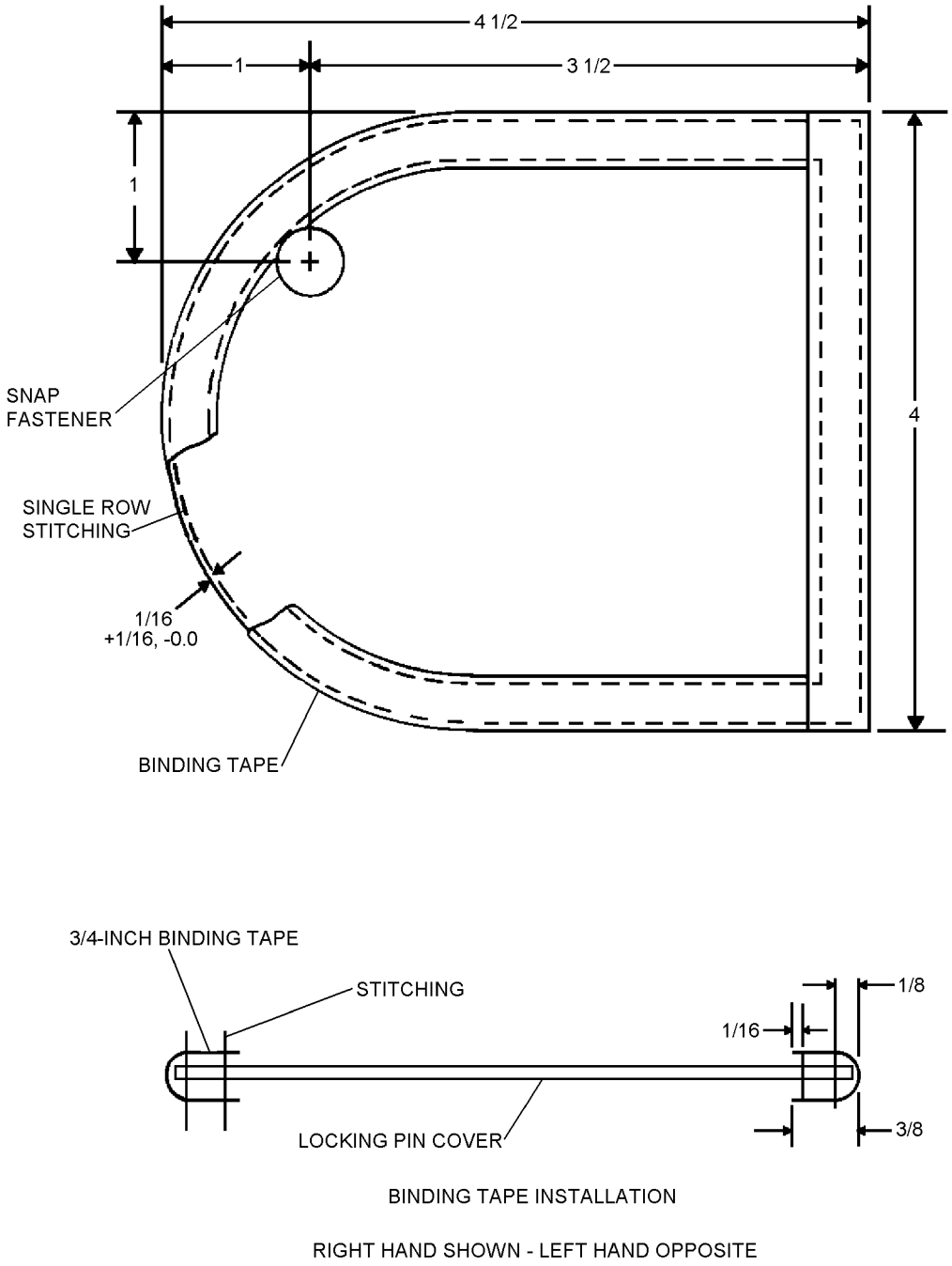

10270016

Figure 27-16. Fabrication of Locking Pin Cover

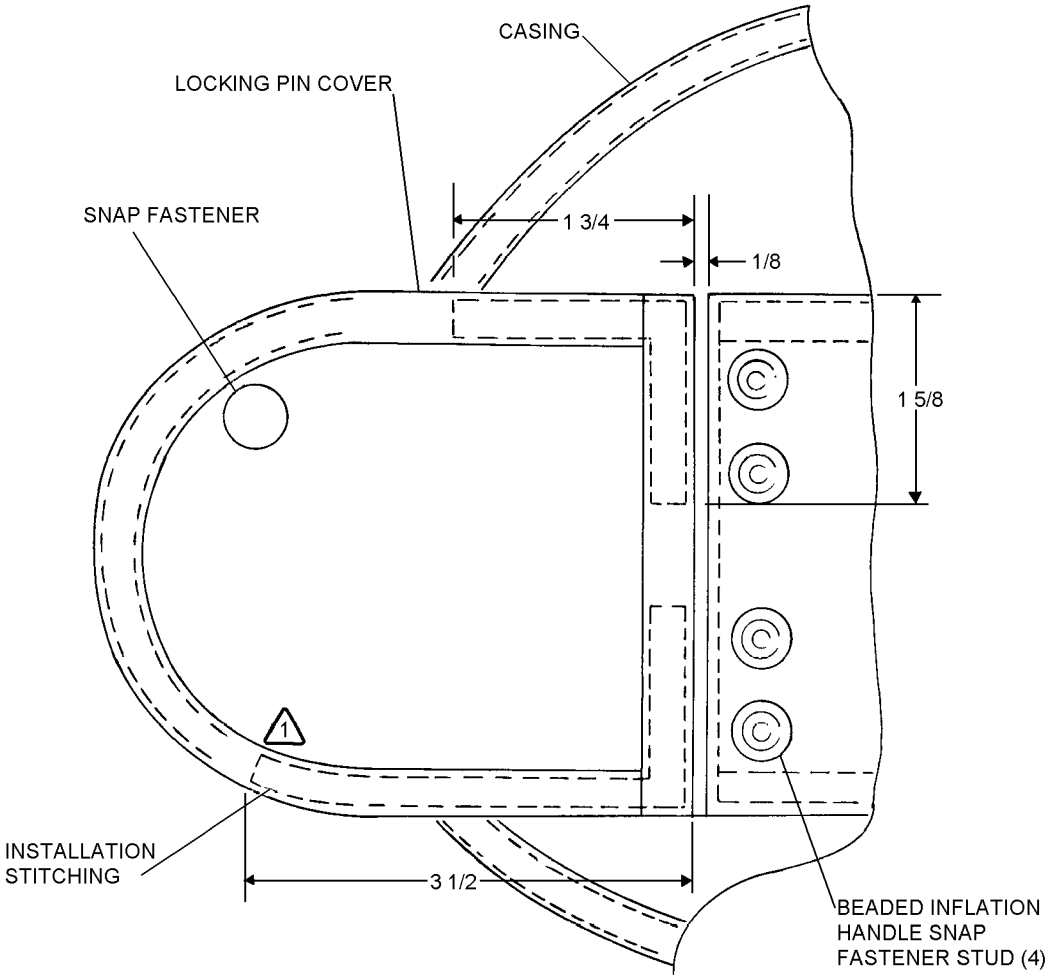

RIGHT HAND SHOWN - LEFT HAND OPPOSITE

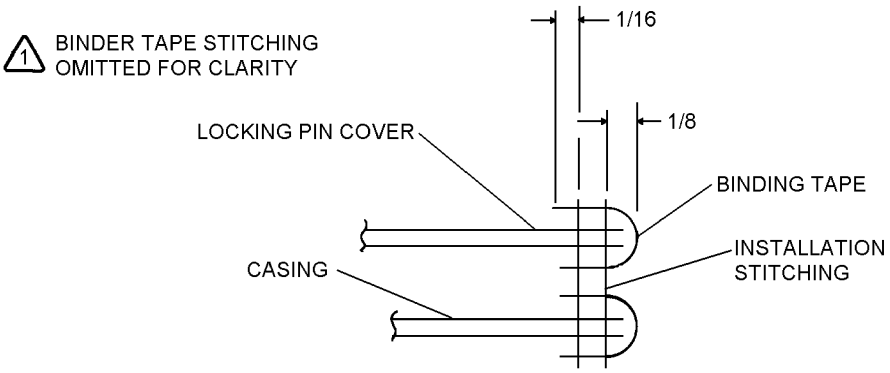

10270017

Figure 27-17. Locking Pin Cover Installation

Figure 27-18 Deleted.

27-85. FABRICATION OF LPU-23B(V)1/P LIFE PRESERVER. To fabricate an LPU-23B(V)1/P life preserver, proceed as follows:

Materials Required

Quantity	Description	Reference Number
As Required	Ink, Marking, Laundry, Black	SPE-92 NIIN 00-161-4229

CAUTION

During assembly and/or repair of a LPU-23B(V)1/P flotation assembly, only Polychloroprene-coated cloth materials and Polychloroprene adhesives shall be used.

NOTE

Prior to beginning modification/fabrication procedures ensure the collar lobe snap hooks and patches and the old waist lobe attachment patches have been removed from the LPU-23B/P bladder assembly. All old cement should be removed for ease in cementing new bladder and snap fastener attachment patches.

1. Modify LPU-23B/P flotation assembly with the addition of waist lobe and collar lobe snap fasteners in accordance with paragraphs 27-86 through 27-89.

2. Using black waterproof ink, blackout existing type classification number on the inside of the life preserver casing. As closely as possible to the original number, stencil in the new number, LPU-23B(V)1/P using black waterproof ink.

3. Assemble life preserver in accordance with procedures of paragraph 27-74.

NOTE

The installation of an LPU-23C/P flotation assembly into a LPU-23B/P casing is not authorized.

27-86. FABRICATION AND INSTALLATION OF WAIST LOBE ATTACHMENT PATCH. The following procedures pertain to the fabrication and installation of the left waist lobe attachment patch. These instructions are typical and apply to both left and right waist lobe installations.

Support Equipment Required

Quantity	Description	Reference Number
1	Roller, Wooden	GGG-R-00620

Materials Required

Quantity	Description	Reference Number
12	Cap, Snap Fastener	MS27983-1 NIIN 00-891-9073
12	Socket, Snap Fastener	MS27983-2 NIIN 00-945-2577
12	Stud, Snap Fastener	MS27983-3 NIIN 00-276-4908
12	Post, Snap Fastener	MS27983-4 NIIN 00-276-4978
As Required	Cloth, Polychloroprene-coated	MIL-C-87187

CAUTION

Use only Polychloroprene adhesives and Polychloroprene-coated cloth patches on Polychloroprene-coated LPU-23B(V)1/P flotation assemblies.

27-87. BLADDER ATTACHMENT PATCH. Procedures for fabrication and installation of the bladder attachment patch are as follows:

1. Spread deflated life preserver on clean flat surface.

2. Fabricate attachment patch using polychloroprene-coated cloth.

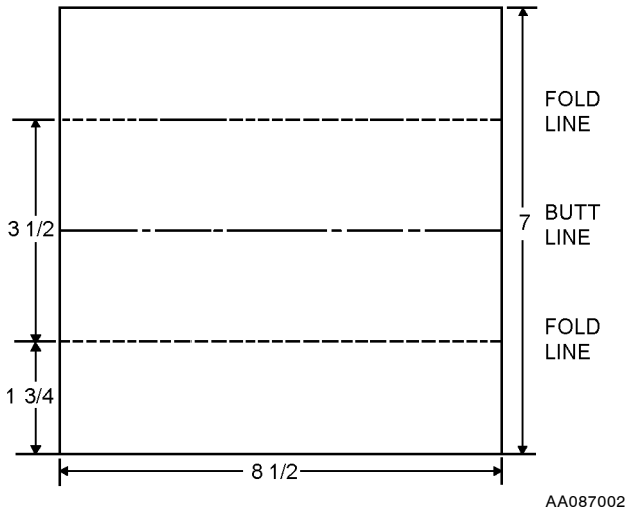

Step 2 - Para 27-87

3. Fold cloth at fold lines, with coated side inside, butt edges together at butt line to form attachment patch 8 1/2 inches by 3 1/2 inches. Crease edges at fold line.

4. Complete the basic attachment patch form by applying polychloroprene adhesive to coated side of the patch in accordance with paragraph 27-64. Fold and butt together edges as in step 3.

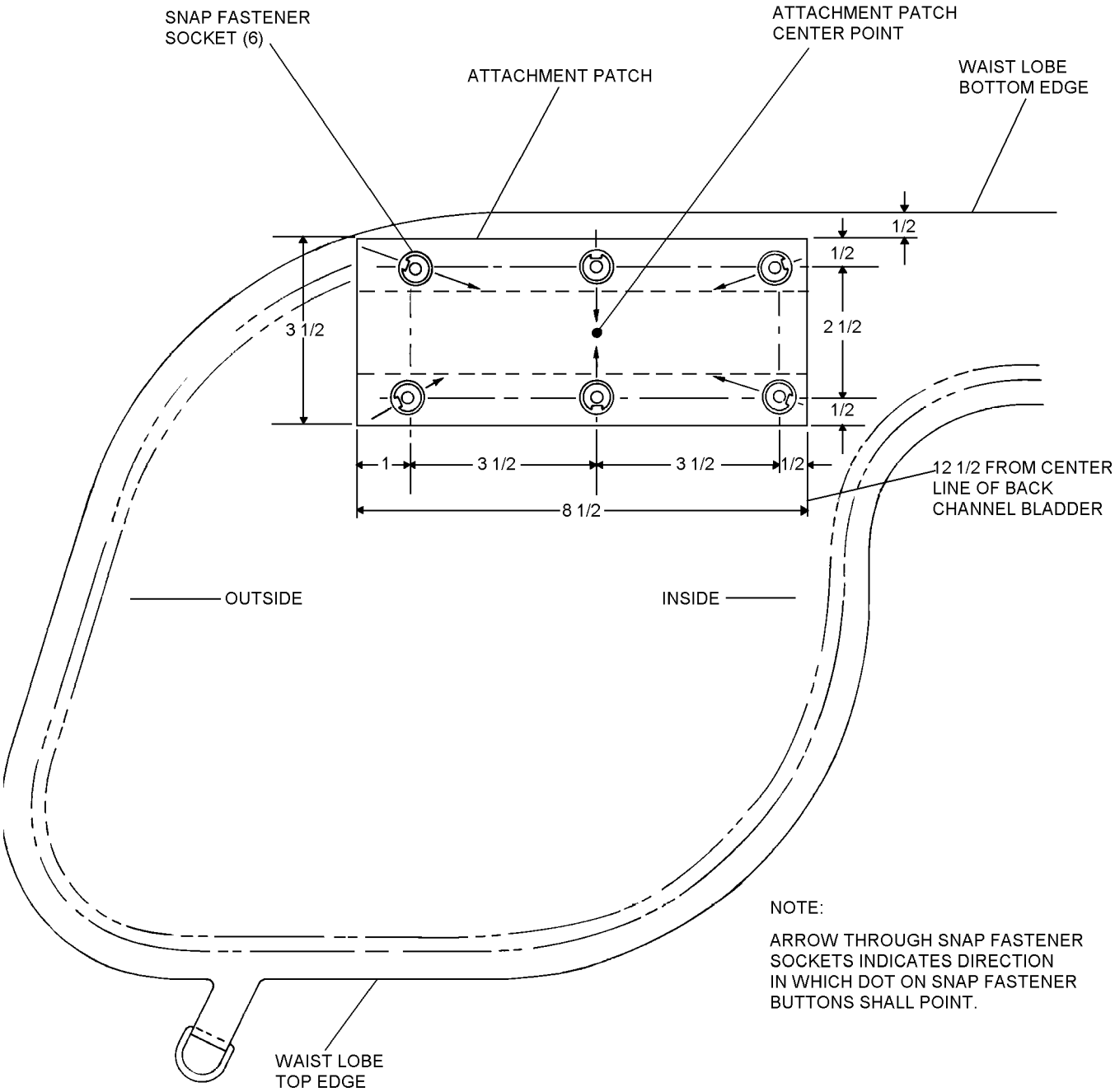

Figure 27-19. Attachment Patch Installation

5. Cut two 8 1/2 inch lengths of Polychloroprene-coated cloth. Fold each length in half, coated side out, to form 8 1/2-inch x 1-inch lengths. Roll fold line with wooden roller to form “V”. Cement one length on each side of the attachment patch, open “V” to the outside. Follow cementing procedures in paragraph 27-64 using Polychloroprene adhesive.

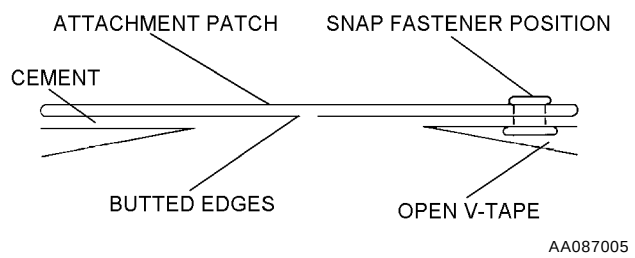

Step 5 - Para 27-87

6. Measure and punch six holes in attachment patch for installation of six uni-directional snap fastener sockets (figure 27-19).

7. Position attachment patch on waist lobe as indicated in figure 27-19 and mark the area on waist lobe. Apply polychloroprene adhesive in accordance with paragraph 27-64 and attach the patch to waist lobe.

8. Install six uni-directional snap fastener sockets with dots on buttons oriented to center point of attachment patch (figure 27-19).

27-88. INSTALLATION OF CASING ATTACHMENT PATCH SNAP FASTENER STUDS. Install six uni-directional snap fastener studs in waist lobe casing as follows:

1. Spread casing assembly flat on clean level surface. Hold in flat non-directional position using thumb tacks or other available means not harmful to fabric. See figure 27-20.

2. Measure and mark snap fastener positions using dimensions in figure 27-20. Remove restraints from casing.

3. Install six snap fastener studs and eyelets.

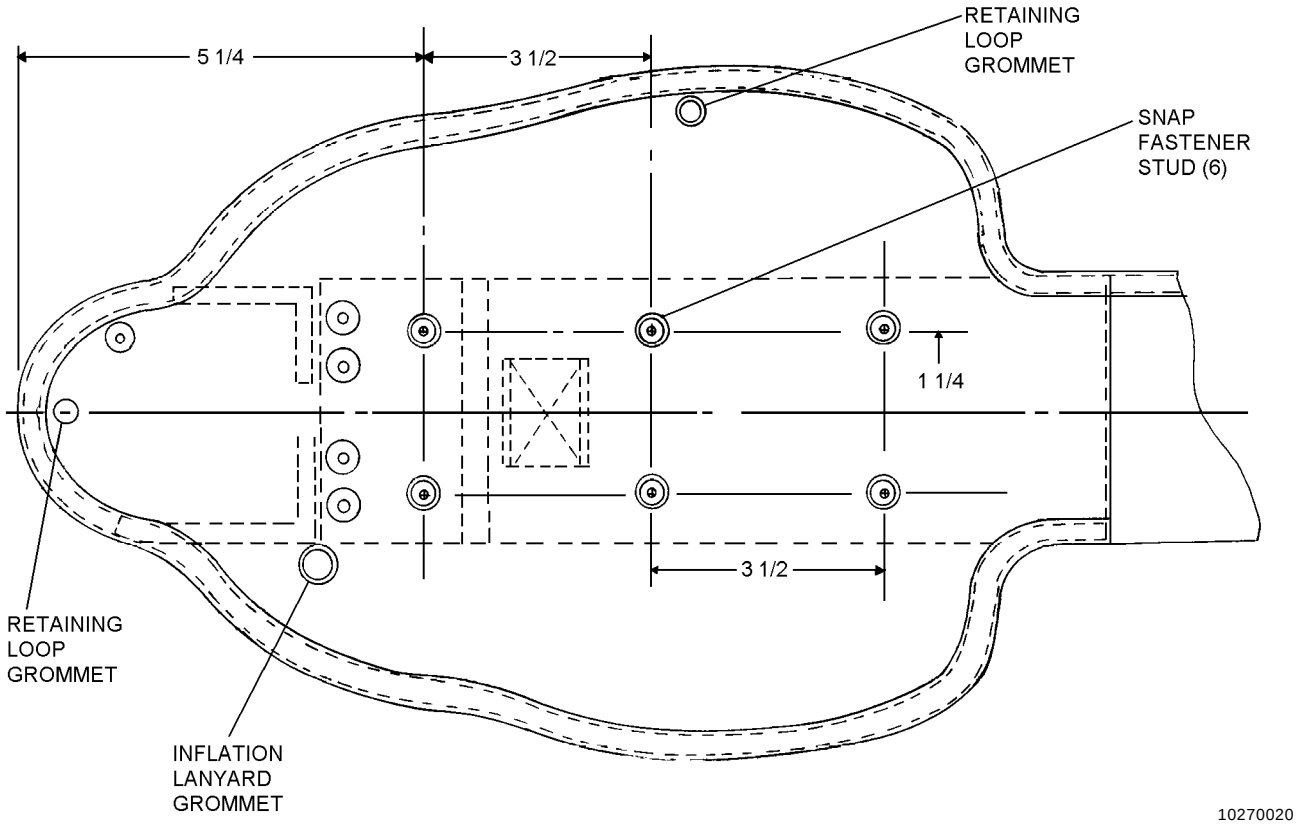

Figure 27-20. Installation Casing Attachment Patch Snap Fastener Studs

27-89. Deleted.

27-90. PACKING PROCEDURES FOR LIFE PRESERVER ASSEMBLY.

27-91. The LPU-23B(V)1/P shall be packed by qualified personnel at the intermediate maintenance level. For cleaning and servicing procedures, refer to paragraph 27-51.

27-92. To pack the LPU-23B(V)1/P life preserver assembly, proceed as follows:

Materials Required

Quantity	Description	Reference Number
As Required	Talc, Technical	MIL-T-50036A NIIN 01-080-9589
As Required	Cord, Nylon Type I	MIL-C-5040 NIIN 00-240-2154
As Required	Thread, Nylon Size A	V-T-295 NIIN 00-204-3803
As Required	Thread Nylon Size E	V-T-295 NIIN 00-204-3884

1. Ensure that life preserver has been inspected in accordance with paragraph 27-25 of this manual.

2. Prior to packing, ensure that chambers are thoroughly deflated. Ensure all bladder surfaces front and rear are lightly dusted with talc.

Figure 27-21 Deleted.

3. Oral inflation valves shall be locked by knurled ring and placed in oral inflation valve pocket. Position LPU-23B(V)1/P life preserver assembly with collar panel folded down.

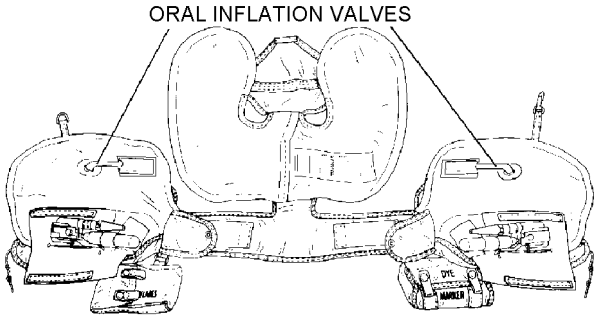

AA092003

Step 3 - Para 27-92

4. Route snaphooks through slots in casing assembly. Fold collar edge over snap fasteners in casing.

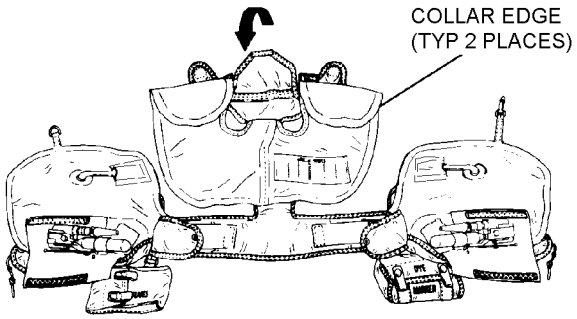

AA092004

Step 4 - Para 27-92

5. Fold over edge of collar panels.

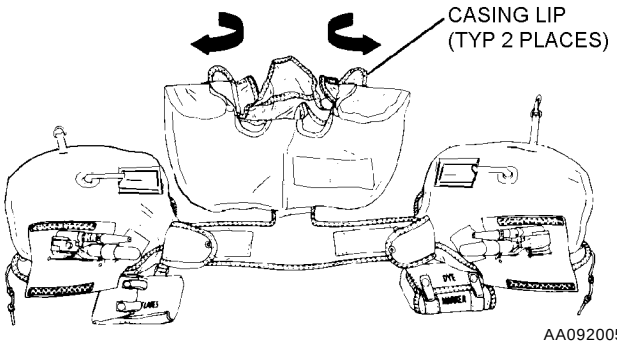

AA092005

Step 5 - Para 27-92

6. Accordion-fold sides of collar lobes into the collar casing.

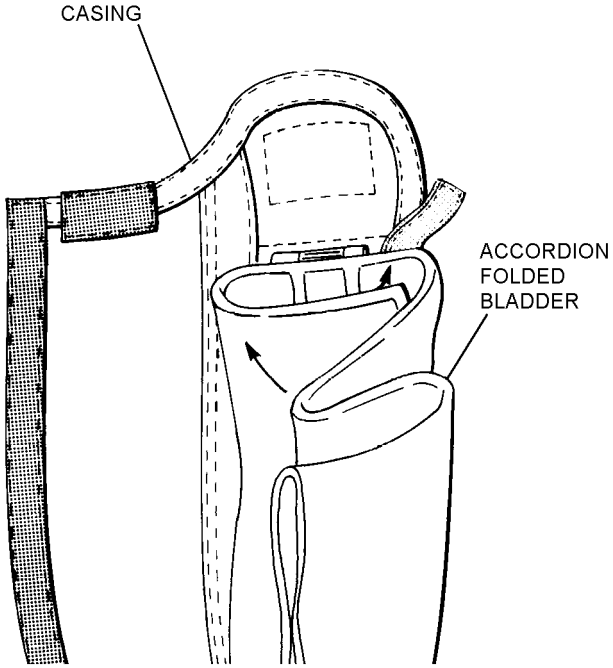

AA092006

Step 6 - Para 27-92

7. Tuck in casing lip and secure collar casing with hook and pile tape.

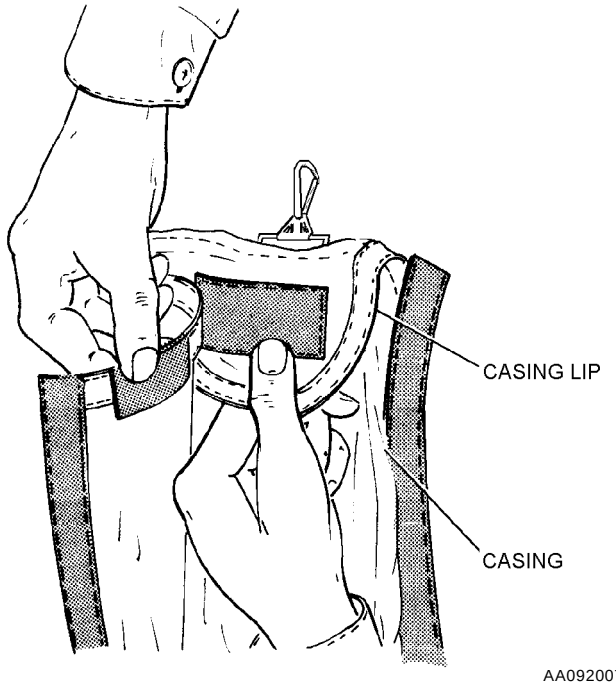

AA092007

Step 7 - Para 27-92

NOTE

The unsewn 3/8- to 1/2-inch end tab of hook tape located on the front edge of the collar lobe casing shall be attached to the mating pile tape on the collar casing cover.

8. Close collar lobe section by engaging the 3/8- to 1/2-inch unsewn portion of hook pile tape on casing cover.

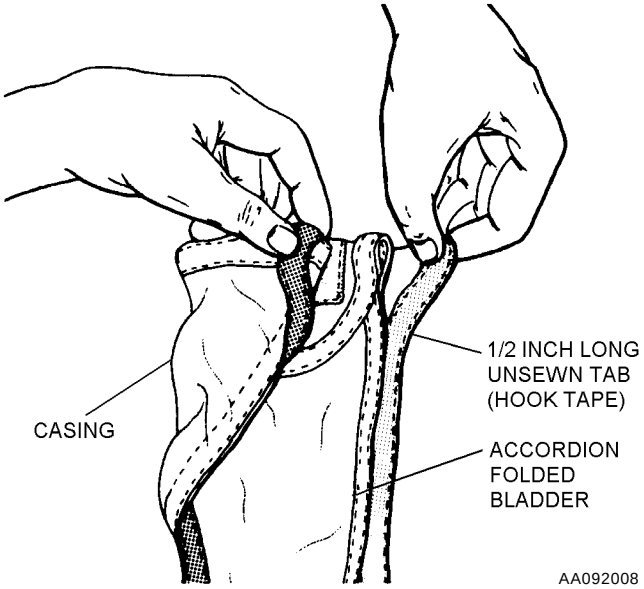

Step 8 - Para 27-92

9. Secure hook and pile tape approximately 8 inches along casing cover edge, securing the accordion-folded bladder within casing cover.

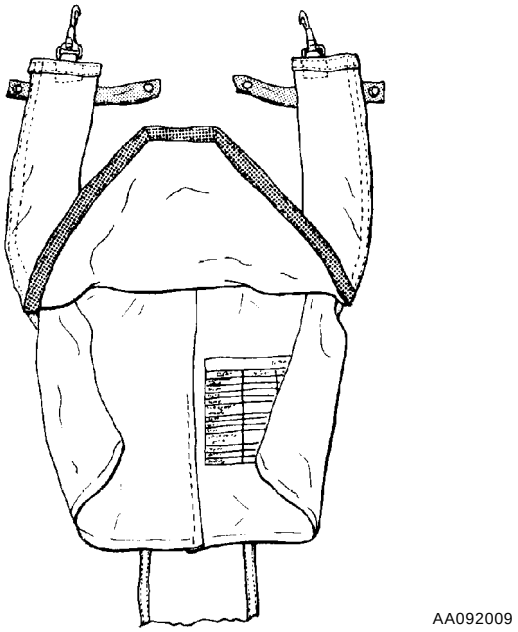

Step 9 - Para 27-92

10. Accordion-fold bottom of collar lobe into collar casing.

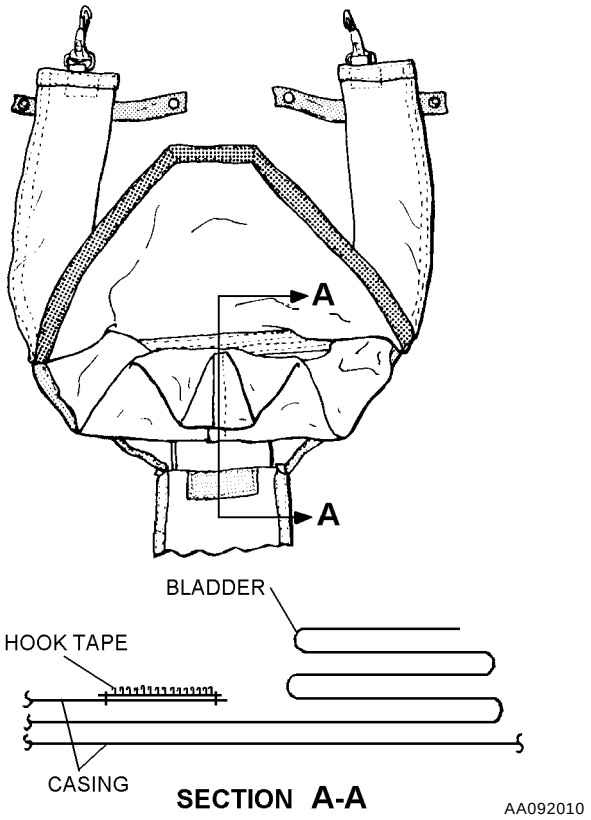

Step 10 - Para 27-92

NOTE

The unsewn 3/8- to 1/2-inch end tab of hook tape located on the rear edges of the collar lobe casing shall be attached to the mating pile tape on the collar casing cover.

11. Continue securing hook and pile tape along casing cover edge and casing lip, ending on unsewn end tabs of hook tape, completely enclosing collar lobe bladder within casing cover. Ensure all hook tape is engaged with pile tape and not exposed.

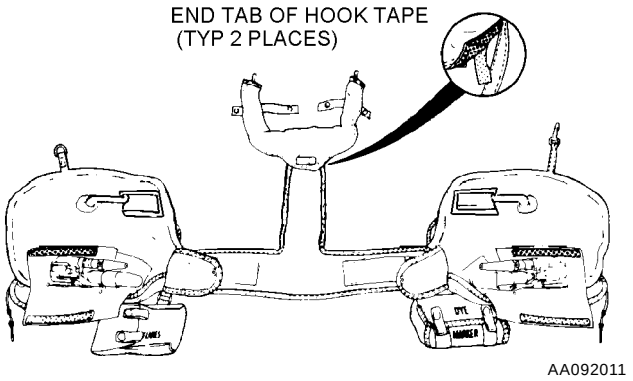

Step 11 - Para 27-92

WARNING

The packaging cord loops of each inflation assembly must be routed under the manual actuating lever, and through the hole in the end of the valve guide arm. See figure 27-13. Rubber bands shall not be used to retain slip-on pockets to D-ring and snap-hook fittings.

12. Insert snaphook and D-ring on waist lobes into slip-on pockets.

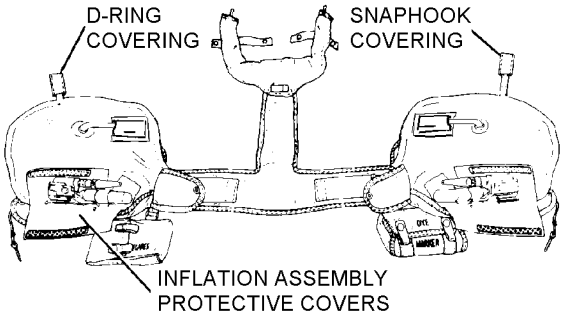

AA092012

Step 12 - Para 27-92

13. Ensure that beaded handle with inflation lanyard is through 2 1/4-inch slot in protective cover; then route packaging cord loop through 3/8-inch diameter hole in protective cover. Secure protective cover using hook and pile tape.

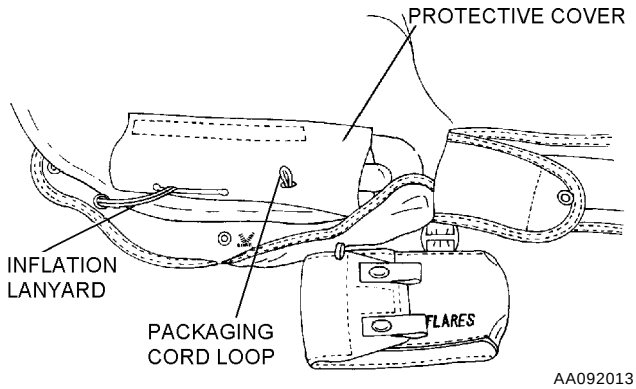

AA092013

Step 13 - Para 27-92

NOTE

Packing cord shall be used to aid in closing life preserver casing.

14. Insert a 2-foot piece of Type I nylon cord through packaging cord loop extending through hole in protective cover. Insert ends of packing cord through grommet in bottom casing flap. Make first fold in waist lobe by bringing top of lobe over to top edge of protective cover.

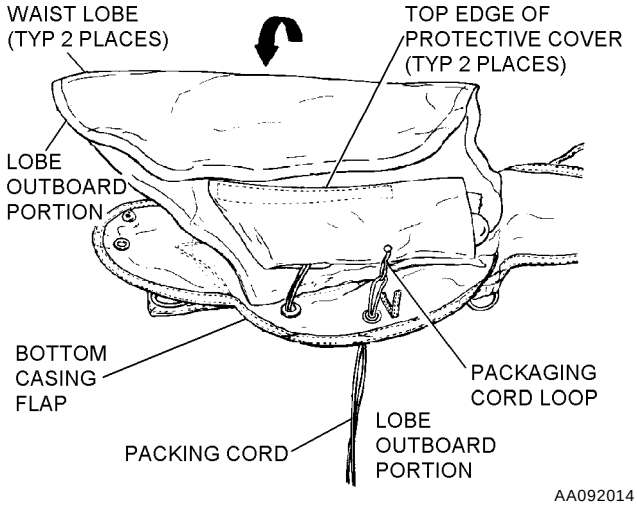

AA092014

Step 14 - Para 27-92

15. Fold outboard portion of waist lobe in, clearing outboard casing flap.

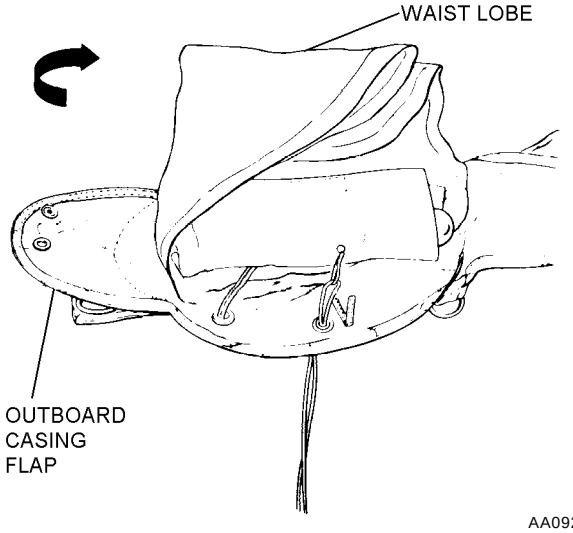

AA092015

Step 15 - Para 27-92

16. Fold waist lobe over to bottom edge of protective cover.

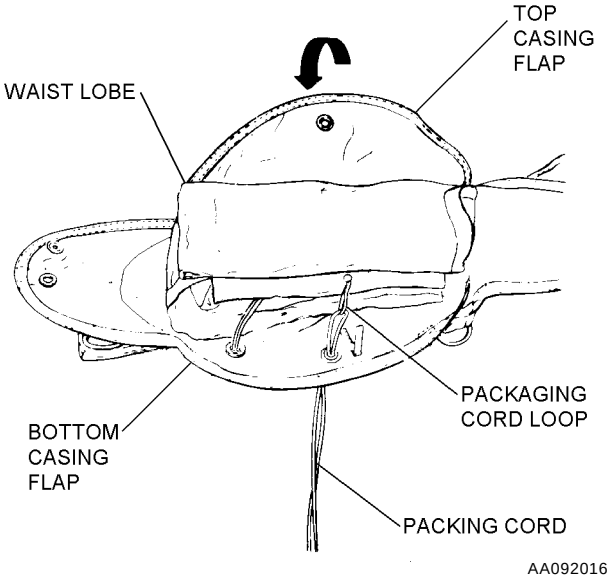

Step 16 - Para 27-92

17. Fold bottom casing flap up and over folded waist lobe and pass ends of packing cord through grommet in top casing flap.

18. Fold top casing flap down and over bottom casing flap. Pull packing cord and attached packaging cord loop through grommet in top casing flap.

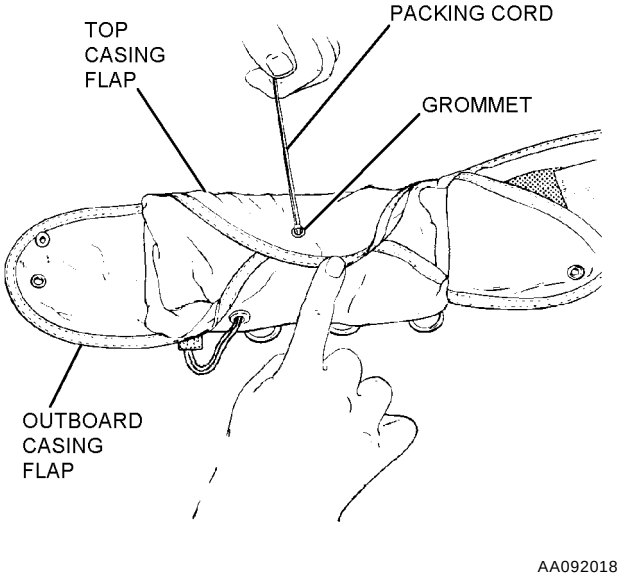

Step 18 - Para 27-92

19. Thread packing cord through inboard casing flap grommet. Pull packaging cord loop through grommet.

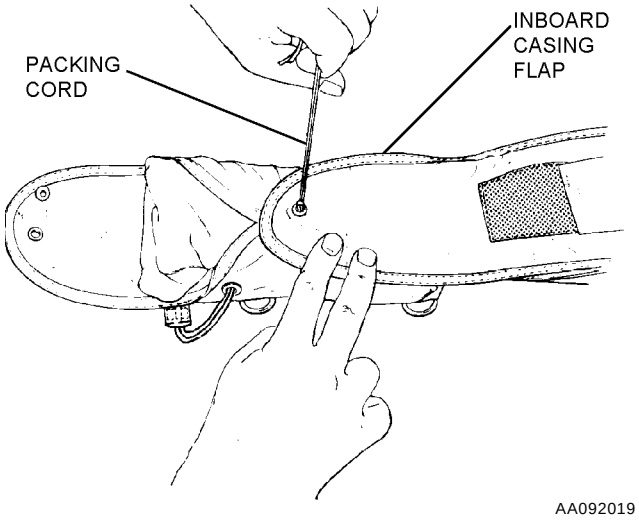

Step 19 - Para 27-92

20. Route locking pin under locking pin cover flap grommet.

WARNING

To avoid possible injury when closing casing of right waist lobe, do not place palm of hand on waist closure snaphooks.

21. Fold outboard casing flap over and pass packing cord through grommet. Pull packaging cord loop through grommet far enough to accept locking pin. Insert locking pin through packaging cord loop and into pin keeper loop. Remove packing cord. See figure 27-22.

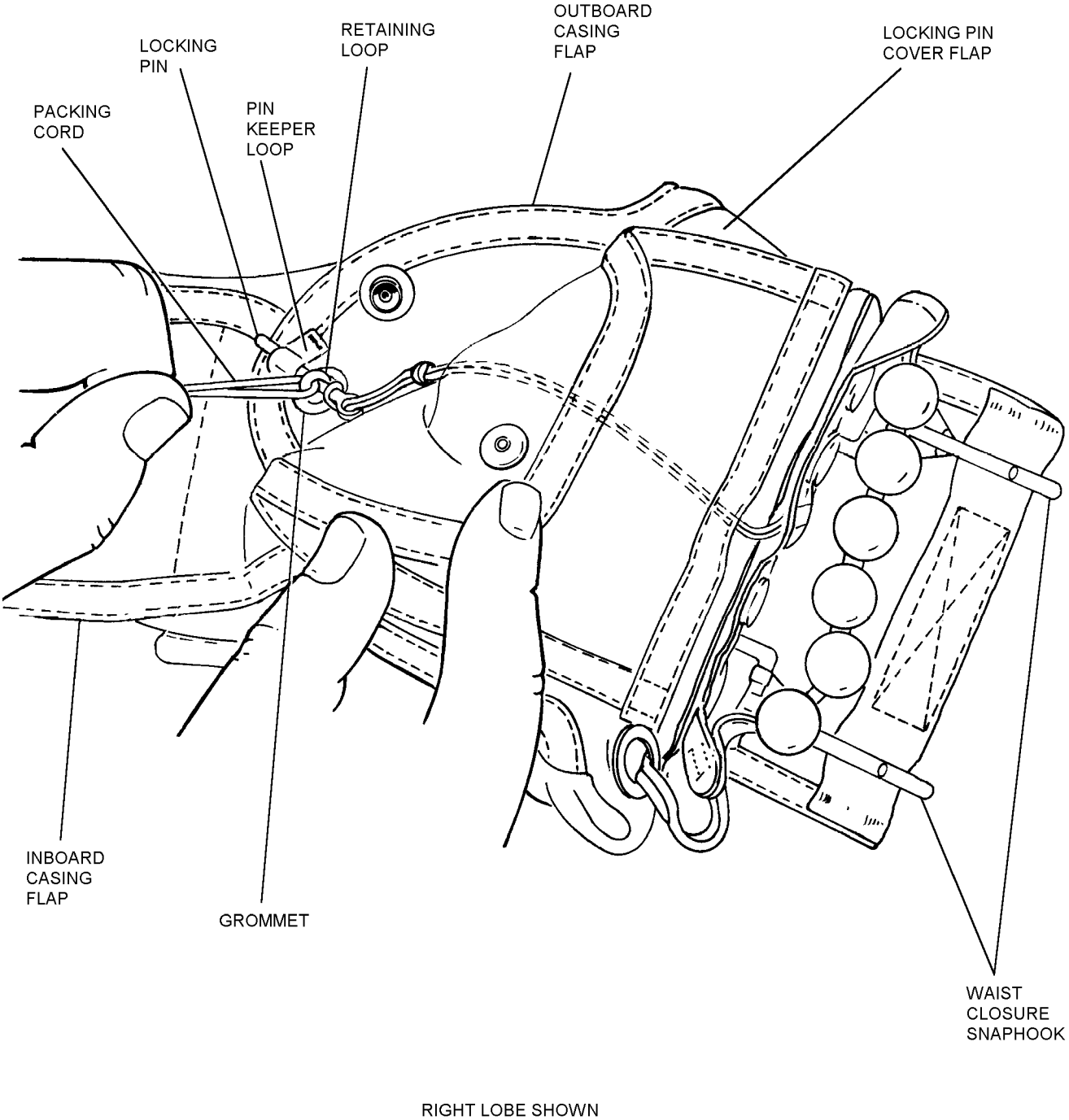

10270022

Figure 27-22. Packing LPU-23B(V)1/P Life Preserver

22. Safety-tie eye of locking pin by passing one turn of size A nylon thread through eye of locking pin, around packaging cord loop, then under pin. Safety-tie beaded inflation handle with one turn of size E nylon thread, single. Draw thread sufficiently to permit a 1/2 ± 1/8-inch space between the middle beads and webbing on the preserver. Tie ends of both safety ties with a surgeon's knot followed by a square knot.

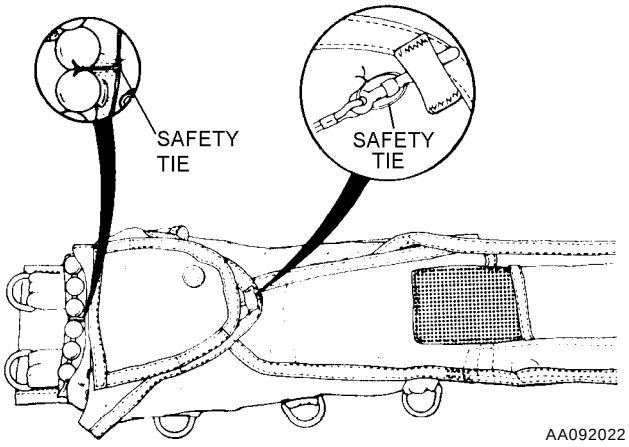

Step 22 - Para 27-92

23. Close locking pin cover flap and secure snap fastener.

NOTE

NAVAIR 13-1-6.5, Rescue and Survival Equipment, contains information on inspection and replacement of survival items.

24. When required, ensure survival items have been inspected for expiration and damage.

NOTE

Each survival item shall be secured to the snap fastener tab of its respective pouch with a 36-inch length (DYE MARKER) or 80-inch length (FLARES) of nylon cord (MIL-C-5040, Type 1). Sear ends of each cord.

25. When required, insert two dye markers into pouch labeled DYE MARKER. Insert two Marine Smoke and Illumination signals into pouch labeled FLARES. Fake excess line and secure with rubber bands.

26. Make necessary entries on appropriate form in accordance with OPNAVINST 4790.2 Series.

Section 27-4. Illustrated Parts Breakdown (IPB)

27-93. GENERAL.

27-94. This section lists and illustrates the assemblies and detail parts of the LPU-23B(V)1/P Life Preserver assembly.

27-95. The Illustrated Parts Breakdown should be used during maintenance when requisitioning and identifying parts.

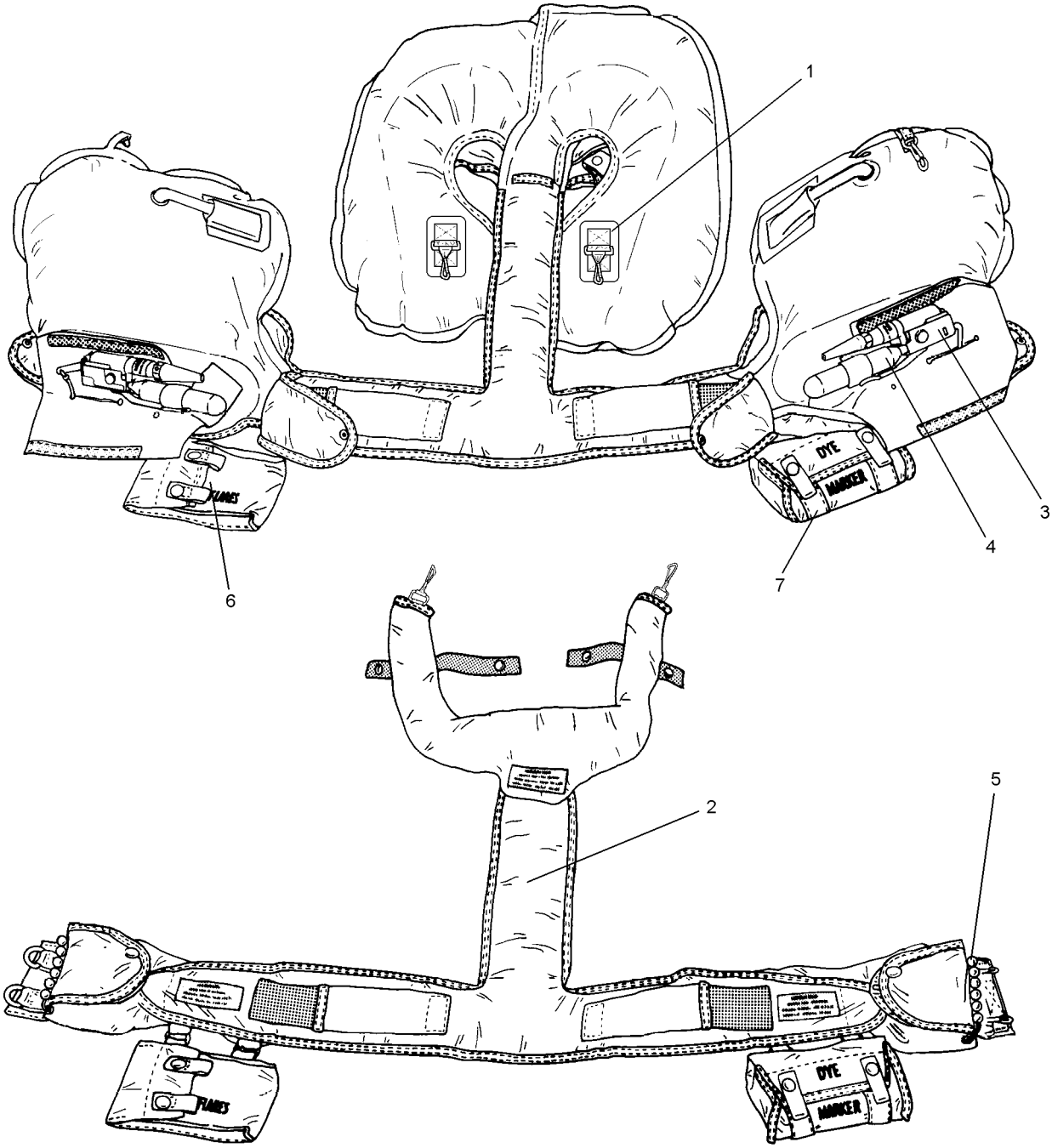

10270023

Figure 27-23. LPU-23B/(V)1/P Life Preserver, Illustrated Parts Breakdown

Figure and Index Number	Part Number	Description 1 2 3 4 5 6 7	Units Per Assembly	Usable On Code
27-23	No Number	LPU-23B(V)1/P LIFE PRESERVER	REF	
-1	68A73H1-102 (NIIN 01-138-4329)	. INFLATABLE LIFE PRESERVER LPU-23A/P	1	
	68A73H1-104 (NIIN 01-138-4329)	. INFLATABLE LIFE PRESERVER LPU-23B/P	1	
-2	1957AS104-2	. . CASING ASSEMBLY (LPU-23C/P) . . . . . . (30003)	1	
-3	849AS153 (NIIN 01-364-4089)	. . INFLATION ASSEMBLY, FLU-8B/P . . . . . . (30003)	2	
	849AS103	. . . BATTERY, 6-Volt, Manganese Dioxide	4	
	1122-095	. . . SLEEVE, Battery Insulating (Note 3)	1	
	1813-044-02	. . . SENSOR PLUG CAP, FLU-8B/P . . . . . . (03688)	2	
	105AS100-3	. . . GASKET, Top (Note 1) (30003)	2	
	105AS100-4	. . . GASKET, Bottom (Note 1) (30003)	2	
	NIIN 01-046-3300	. . . SEAT SEAL, O-Ring, Multi	2	
	1138-003-01	. . . PACKAGING CORD LOOP	2	
-4	MIL-C-25369 (NIIN 01-077-8773)	. . . CO_2 CYLINDER, Type III, 35 Gram	2	
-5	975AS121-11 (NIIN 01-120-4752)	. . . BEADED INFLATION HANDLE . . . . . . Type I	2	
-6	68A73D3-61	. . FLARE POUCH ASSEMBLY (30003) . . . . . . (Note 2)	1	
-7	68A73D2-41	. . DYE MARKER POUCH ASSEMBLY . . . . . . (30003) (Note 2)	1	

Notes:
1. Top and bottom gaskets are obtained from Valve Stem Kit, P/N 105AS100-6, NIIN 00-113-8290, which contains one top and one bottom gasket.
2. Optional equipment at the discretion of the Squadron Commander.
3. The battery insulating sleeve is not a stocked item. After installation directed by Aircrew Systems Bulletin 976, it becomes part of the FLU-8B/P Unit. Replacement sleeves are issued by Indian Head Division, NSWC.

NUMERICAL INDEX

Part Number	Figure and Index Number	SM&R Code
MIL-C-25369	27-23-4	PAGZZ
NIIN 01-046-3300	27-23-3	
105AS100-3	27-23-3	
105AS100-4	27-23-3	
1122-095	27-23-3	
1138-003-01	27-23-3	PA--Z
1627-012-01	27-23-3	PA--Z
1813-044-02	27-23-3	
1957AS104-2	27-23-2	
68A73D2-41	27-23-7	PAGZZ
68A73D3-61	27-23-6	PAGZZ
68A73H1-102	27-23-1	
68A73H1-104	27-23-1	
849AS103	27-23-3	PA--Z
975AS121-11	27-23-5	PAGZZ

THIS PAGE INTENTIONALLY LEFT BLANK.

APPENDIX A

RESERVED

THIS PAGE INTENTIONALLY LEFT BLANK.

APPENDIX B

THE METRIC SYSTEM AND METRIC UNIT CONVERSION CHARTS

The Metric System simply and logically coordinates the measurements of length, area, volume, and mass into one decimalized system. United States currency, with its unexcelled convenience, was the first large scale national use of a decimal system. The ratio between the units of the series - dollars, dimes, cents, and mills - is ten. Additions and other numerical operations are simple. Calculations with metric units require no conversion from unit to unit, as for example between inches and feet or ounces and pounds.

In the Metric System there is one series of units for length, one for area, one for volume or capacity, and one for mass, and one for temperature.

LENGTH - The common metric units of length are the millimeter (mm) for small dimensions, the centimeter (cm) for daily practical use, the meter (m) for expressing dimensions of larger objects and short distances and the kilometer (km) for longer distances. The centimeter is about four-tenths of an inch. The meter is about forty inches and the kilometer about six-tenths of a mile (figure B-1). When drawing to metric scale, engineering and product dimensions are in millimeters. Architectural drawings can be in millimeters or centimeters. On land surveys the unit is the meter. On maps the kilometer is the unit of measurement.

AREA - Small areas are usually measured in square centimeters (cm^2). In building and construction the square meter (m^2) is used and is about 20 percent larger than a square yard. The hectare (ha) is used for land surveys and is about 2.5 acres.

VOLUME - For volume the most convenient unit is the cubic decimeter (dm^3), referred to as the liter (l). The liter is slightly larger than the U.S. liquid quart but smaller than the U.S. dry quart and the British Imperial quart. The preferred unit for dispensing unit for dispensing drugs and for scientific work is the cubic centimeter (cm^3) or milliliter (ml) as it is also called. For measuring amounts of concrete and excavations the cubic meter (m^3) is used.

MASS - In pharmaceutical and scientific work the gram (g) is the most convenient unit. There are slightly less than 30 grams in one avoirdupois ounce. For most other uses the kilogram (kg) is convenient and is approximately 2.2 pounds. The metric ton (t), 1000 kg, is used for farm commodities, minerals, and large shipments. It is convenient that a liter of pure water at standard temperature and pressure has a mass of one kilogram (discrepancy less than one part in 10,000). This relationship makes it easy to determine the mass of any known volume of water, or of any other liquid if its specific gravity is known.

TEMPERATURE - All countries using the Metric System of weights and measures also use the Celsius (C) scale (formerly called centigrade) for ordinary measurement of temperature. On the Celsius scale pure water at standard atmospheric pressure freezes at 0 and boils at 100. Normal human body temperature is 37°, while a comfortable room temperature is about 22°. The preferred temperature scale for engineering and physics is the kelvin (K) which has the same units as the Celsius and where the freezing point of pure water is 273.15 K.

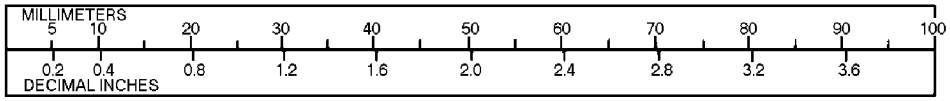

1 Millimeter = 0.03937 Inch Scale - 1 Centimeter = 5 Millimeters

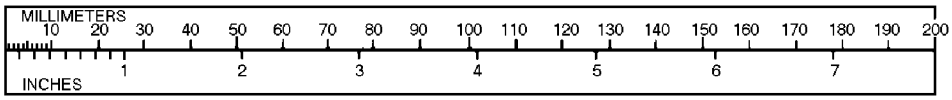

1 Inch = 25.4 Millimeters Scale - 1 Centimeter = 10 Millimeters

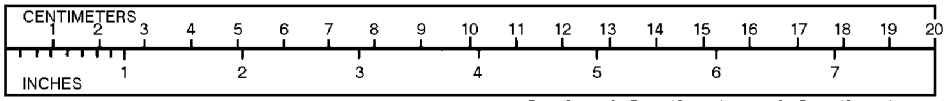

1 Centimeter = 0.39370 Inch Scale - 1 Centimeter = 1 Centimeters

1 Inch = 2.54 Centimeters

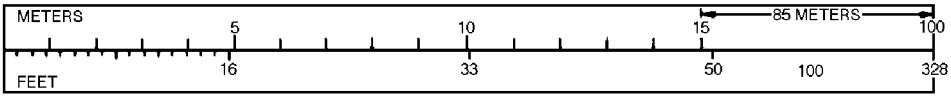

Scale - 1 Centimeter = 1 Meter 1 Foot = 0.3048 Meter

1 Meter = 3.28083 Feet (39.37 Inches - Act of Congress 1866)

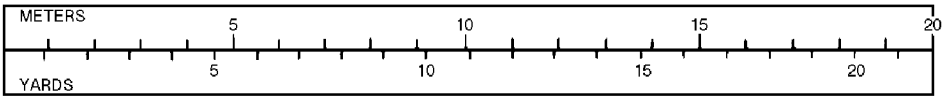

1 Meter = 1.09361 Yards 1 Yard = 0.9144 Meter Scale - 1 Centimeter = 1 Meter

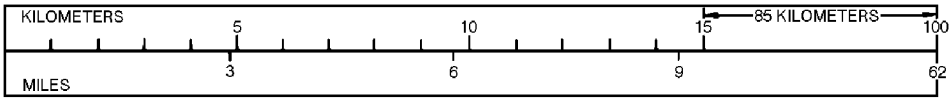

1 Kilometer = 0.62137 Mile Scale - 1 Centimeter = 1 Kilometer

Mile = 1.6093 Kilometers

1 Cubic Centimeter = 0.061 Cubic Inch Scale - 1 Centimeter = 1 Cubic Centimeter

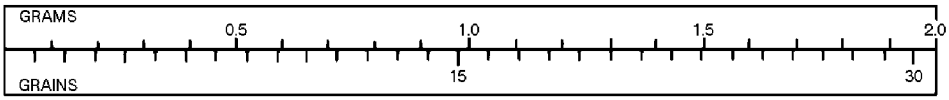

1 Gram = 15.4324 Grains Scale - 1 Centimeter = 0.1 Gram

B-2

Figure B-1. Reference Conversion Charts (Sheet 1 of 2)

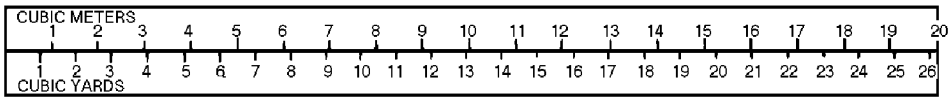

1 Cubic Meter = 1.30795 Cubic meter **Scale - 1 Centimeter = 1 Cubic Meter**

1 Cubic Yard = 0.76455 Cubic meter

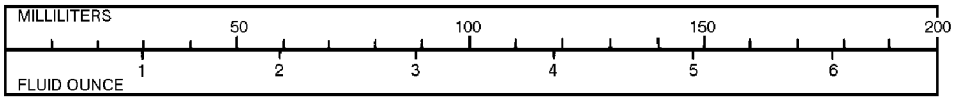

1 Milliliter = 0.03381 Fluid Ounce **Scale - 1 Centimeter = 10 Milliliter**

1 Fluid Ounce = 29.57 Milliliters

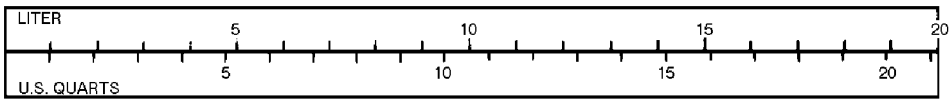

1 Liter = 1.0567 U.S. Quarts 1 U.S. Quart = 0.9463 Liter Scale - 1 Centimeter = 1 Liter

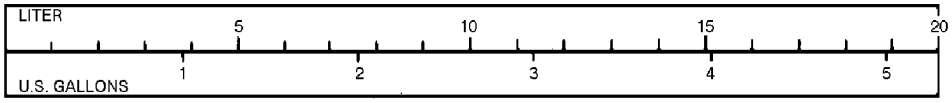

1 Liter = 0.26418 U.S. Gallon **Scale - 1 Centimeter = 1 Liter**

1 U.S. Gallon = 3.7853 Liters

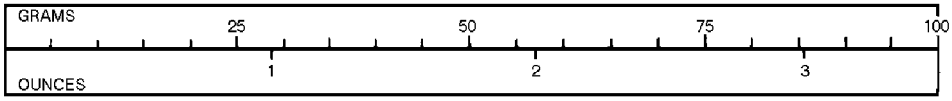

1 Avoirdupois ounce = 28.3495 Grams **Scale - 1 Centimeter = 5 Grams**

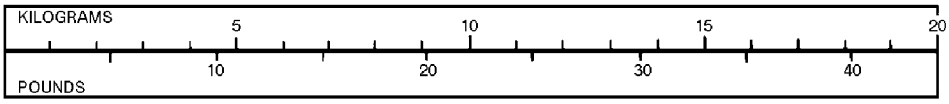

1 Kilogram = 2.2045 Pounds **Scale - 1 Centimeter = 1 Kilogram**

1 Pound = 0.45359 Kilogram

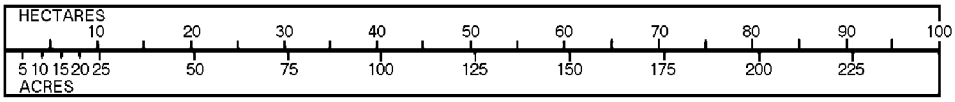

1 Hectare = 2.47105 Acres **Scale - 1 Centimeter = 5 Hectares**

1 Acres = 0.40489 Hectares **40 Acres = 16.19 Hectares**

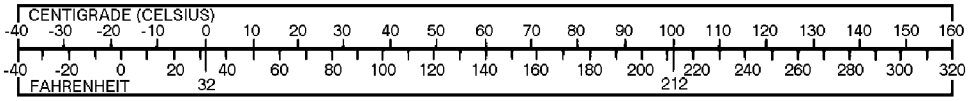

Fahrenheit = 9/5 Centigrade plus 32 **Scale - 1 Centigrade = 10° Centigrade**

Centigrade = Fahrenheit minus 32 x 5/9

B-2A

Figure B-1. Reference Conversion Charts (Sheet 2 of 2)

Table B-1. Symbols and Relationships of Metric Units

Quantity	Unit (Note 1)	Symbol	Relationship of Units
Length	millimeter centimeter decimeter meter (Note 2) kilometer	mm cm dm m km	1 mm = 0.001 m 1 cm = 10 mm 1 dm = 10 cm 1 m = 100 cm 1 km = 1000 m
Area	square centimeter square decimeter square meter (Note 2) are hectare square kilometer	cm^2 dm^2 m^2 a ha km^2	1 cm^2 = 100 mm^2 1 dm^2 = 100 cm^2 1 m^2 = 100 dm^2 1 a = 100 m^2 1 ha = 100 a 1 km^2 = 100 ha
Volume	cubic centimeter millimeter cubic decimeter liter cubic meter (Note 2)	cm^3 ml dm^3 l m^3	1 cm^3 } = 0.001 l 1 ml 1 dm^3 } = 1000 ml 1 l 1 m^3 = 1000 l
Mass*	milligram gram kilogram (Note 2) metric ton	mg g kg t	1 mg = 0.001 g 1 g = 1000 mg 1 kg = 1000 g 1 t = 1000 kg

*Mass is the quantity of matter. Weight is a force Earth's attraction for a given mass. Generally the term mass is meant when we use weight.

Notes:
1. The three main units; meter, liter, and gram, can be changed to more convenient sized units for specific purposes by means of several well known prefixes. Milli means 1/1000. Centi means 1/100. Deci means 1/10. Kilo means 1000. One merely learns the main units and the value of the most commonly used prefixes. The symbols for metric units are the same for single and plural amounts and are not followed by a period. Rates are usually shown by use of the slash as in m/s.
2. The underlined units in this table are basic or derived units of the International System of Units (SI).

Table B-2. Inches to Millimeters Conversion Chart

Inch	mm	Inch	mm	Inch	mm	Inch	mm	Inch	mm
.001	0.0254	.051	1.2954	.101	2.5654	.151	3.8354	.201	5.1054
.002	0.0508	.052	1.3208	.102	2.5908	.152	3.8608	.202	5.1308
.003	0.0762	.053	1.3462	.103	2.6162	.153	3.8862	.203	5.1562
.004	0.1016	.054	1.3716	.104	2.6416	.154	3.9116	.204	5.1816
.005	0.1270	.055	1.3970	.105	2.6670	.155	3.9370	.205	5.2070
.006	0.1524	.056	1.4224	.106	2.6924	.156	3.9624	.206	5.2324
.007	0.1778	.057	1.4478	.107	2.7178	.157	3.9878	.207	5.2578
.008	0.2032	.058	1.4732	.108	2.7432	.158	4.0132	.208	5.2832
.009	0.2286	.059	1.4986	.109	2.7686	.159	4.0386	.209	5.3086
.010	0.2540	.060	1.5240	.110	2.7940	.160	4.0640	.210	5.3340
.011	0.2794	.061	1.5494	.111	2.8194	.161	4.0894	.211	5.3594
.012	0.3048	.062	1.5748	.112	2.8448	.162	4.1148	.212	5.3848
.013	0.3302	.063	1.6002	.113	2.8702	.163	4.1402	.213	5.4102
.014	0.3556	.064	1.6256	.114	2.8956	.164	4.1656	.214	5.4356
.015	0.3810	.065	1.6510	.115	2.9210	.165	4.1910	.215	5.4610
.016	0.4064	.066	1.6764	.116	2.9464	.166	4.2164	.216	5.4864
.017	0.4318	.067	1.7018	.117	2.9718	.167	4.2418	.217	5.5118
.018	0.4572	.068	1.7272	.118	2.9972	.168	4.2672	.218	5.5372
.019	0.4826	.069	1.7526	.119	3.0226	.169	4.2926	.219	5.5626
.020	0.5080	.070	1.7780	.120	3.0480	.170	4.3180	.220	5.5880
.021	0.5334	.071	1.8034	.121	3.0734	.171	4.3434	.221	5.6134
.022	0.5588	.072	1.8288	.122	3.0988	.172	4.3688	.222	5.6388
.023	0.5842	.073	1.8542	.123	3.1242	.173	4.3942	.223	5.6642
.024	0.6096	.074	1.8796	.124	3.1496	.174	4.4196	.224	5.6896
.025	0.6350	.075	1.9050	.125	3.1750	.175	4.4450	.225	5.7150
.026	0.6604	.076	1.9304	.126	3.2004	.176	4.4704	.226	5.7404
.027	0.6858	.077	1.9558	.127	3.2258	.177	4.4958	.227	5.7658
.028	0.7112	.078	1.9812	.128	3.2512	.178	4.5212	.228	5.7912
.029	0.7366	.079	2.0066	.129	3.2766	.179	4.5466	.229	5.8166
.030	0.7620	.080	2.0320	.130	3.3020	.180	4.5720	.230	5.8420
.031	0.7874	.081	2.0574	.131	3.3274	.181	4.5974	.231	5.8674
.032	0.8128	.082	2.0828	.132	3.3528	.182	4.6228	.232	5.8928
.033	0.8382	.083	2.1082	.133	3.3782	.183	4.6482	.233	5.9182
.034	0.8636	.084	2.1336	.134	3.4036	.184	4.6736	.234	5.9436
.035	0.8890	.085	2.1590	.135	3.4290	.185	4.6990	.235	5.9690
.036	0.9144	.086	2.1844	.136	3.4544	.186	4.7244	.236	5.9944
.037	0.9398	.087	2.2098	.137	3.4798	.187	4.7498	.237	6.0198
.038	0.9652	.088	2.2352	.138	3.5052	.188	4.7752	.238	6.0452
.039	0.9906	.089	2.2606	.139	3.5306	.189	4.8006	.239	6.0706
.040	1.0160	.090	2.2860	.140	3.5560	.190	4.8260	.240	6.0960
.041	1.0414	.091	2.3114	.141	3.5814	.191	4.8514	.241	6.1214
.042	1.0668	.092	2.3368	.142	3.6068	.192	4.8768	.242	6.1468
.043	1.0922	.093	2.3622	.143	3.6322	.193	4.9022	.243	6.1722
.044	1.1176	.094	2.3876	.144	3.6576	.194	4.9276	.244	6.1976
.045	1.1430	.095	2.4130	.145	3.6830	.195	4.9530	.245	6.2230
.046	1.1684	.096	2.4384	.146	3.7084	.196	4.9784	.246	6.2484
.047	1.1938	.097	2.4638	.147	3.7338	.197	5.0038	.247	6.2738
.048	1.2192	.098	2.4892	.148	3.7592	.198	5.0292	.248	6.2992
.049	1.2446	.099	2.5146	.149	3.7846	.199	5.0546	.249	6.3246
.050	1.2700	.100	2.5400	.150	3.8100	.200	5.0800	.250	6.3500

Inch	mm	Inch	mm	Inch	mm	Inch	mm	Inch	mm
.251	6.3754	.301	7.6454	.351	8.9154	.401	10.1854	.451	11.4554
.252	6.4008	.302	7.6708	.352	8.9408	.402	10.2108	.452	11.4808
.253	6.4262	.303	7.6962	.353	8.9662	.403	10.2362	.453	11.5062
.254	6.4516	.304	7.7216	.354	8.9916	.404	10.2616	.454	11.5316
.255	6.4770	.305	7.7470	.355	9.0170	.405	10.2870	.455	11.5570
.256	6.5024	.306	7.7724	.356	9.0424	.406	10.3124	.456	11.5824
.257	6.5278	.307	7.7978	.357	9.0678	.407	10.3378	.457	11.6078
.258	6.5532	.308	7.8232	.358	9.0932	.408	10.3632	.458	11.6332
.259	6.5786	.309	7.8486	.359	9.1186	.409	10.3886	.459	11.6586
.260	6.6040	.310	7.8740	.360	9.1440	.410	10.4140	.460	11.6840
.261	6.6294	.311	7.8994	.361	9.1694	.411	10.4394	.461	11.7094
.262	6.6548	.312	7.9248	.362	9.1948	.412	10.4648	.462	11.7348
.263	6.6802	.313	7.9502	.363	9.2202	.413	10.4902	.463	11.7602
.264	6.7056	.314	7.9756	.364	9.2456	.414	10.5156	.464	11.7856
.265	6.7310	.315	8.0010	.365	9.2710	.415	10.5410	.465	11.8110
.266	6.7564	.316	8.0264	.366	9.2964	.416	10.5664	.466	11.8364
.267	6.7818	.317	8.0518	.367	9.3218	.417	10.5918	.467	11.8618
.268	6.8072	.318	8.0772	.368	9.3472	.418	10.6172	.468	11.8872
.269	6.8326	.319	8.1026	.369	9.3726	.419	10.6426	.469	11.9126
.270	6.8580	.320	8.1280	.370	9.3980	.420	10.6680	.470	11.9380
.271	6.8834	.321	8.1534	.371	9.4234	.421	10.6934	.471	11.9634
.272	6.9088	.322	8.1788	.372	9.4488	.422	10.7188	.472	11.9888
.273	6.9342	.323	8.2042	.373	9.4742	.423	10.7442	.473	12.0142
.274	6.9596	.324	8.2296	.374	9.4996	.424	10.7696	.474	12.0396
.275	6.9850	.325	8.2550	.375	9.5250	.425	10.7950	.475	12.0650
.276	7.0104	.326	8.2804	.376	9.5504	.426	10.8204	.476	12.0904
.277	7.0358	.327	8.3058	.377	9.5758	.427	10.8458	.477	12.1158
.278	7.0612	.328	8.3312	.378	9.6012	.428	10.8712	.478	12.1412
.279	7.0366	.329	8.3566	.379	9.6266	.429	10.8966	.479	12.1666
.280	7.1120	.330	8.3820	.380	9.6520	.430	10.9220	.480	12.1920
.281	7.1374	.331	8.4074	.381	9.6774	.431	10.9474	.481	12.2174
.282	7.1628	.332	8.4328	.382	9.7028	.432	10.9728	.482	12.2428
.283	7.1882	.333	8.4582	.383	9.7282	.433	10.9982	.483	12.2682
.284	7.2136	.334	8.4836	.384	9.7536	.434	11.0236	.484	12.2936
.285	7.2390	.335	8.5090	.385	9.7790	.435	11.0490	.485	12.3190
.286	7.2644	.336	8.5344	.386	9.8044	.436	11.0744	.486	12.3444
.287	7.2898	.337	8.5598	.387	9.8298	.437	11.0998	.487	12.3698
.288	7.3152	.338	8.5852	.388	9.8552	.438	11.1252	.488	12.3952
.289	7.3406	.339	8.6106	.389	9.8806	.439	11.1506	.489	12.4206
.290	7.3660	.340	8.6360	.390	9.9060	.440	11.1760	.490	12.4460
.291	7.3914	.341	8.6614	.391	9.9314	.441	11.2014	.491	12.4714
.292	7.4168	.342	8.6868	.392	9.9568	.442	11.2268	.492	12.4968
.293	7.4422	.343	8.7122	.393	9.9822	.443	11.2522	.493	12.5222
.294	7.4676	.344	8.7376	.394	10.0076	.444	11.2776	.494	12.5476
.295	7.4930	.345	8.7630	.395	10.0330	.445	11.3030	.495	12.5730
.296	7.5184	.346	8.7884	.396	10.0584	.446	11.3284	.496	12.5984
.297	7.5438	.347	8.8138	.397	10.0838	.447	11.3538	.497	12.6238
.298	7.5692	.348	8.8392	.398	10.1092	.448	11.3792	.498	12.6492
.299	7.5946	.349	8.8646	.399	10.1346	.449	11.4046	.499	12.6746
.300	7.6200	.350	8.8900	.400	10.1600	.450	11.4300	.500	12.7000

Table B-3. International System of Units (SI)

Quantity	Unit	Symbol
Elemental units		
Length	meter	m
Mass	kilogram	kg
Time	second	s
Electric current	ampere	A
Temperature	degree Kelvin	°K
Luminous intensity	candela	cd
Supplementary units		
Plane angle	radian	rad
Solid angle	steradian	sr
Derived units		
Area	square meter	m^2
Volume	cubic meter	m^3
Frequency	hertz	Hz (s^{-1})
Density	kilogram per cubic meter	kg/m^3
Velocity	meter per second	m/s
Angular velocity	radian per second	rad/s
Acceleration	meter per second squared	m/s^2
Angular acceleration	radian per second squared	rad/s^2
Force	newton	N (kg m/s^2)
Pressure	newton per square meter	N/m^2
Kinematic viscosity	square meter per second	m^2/s
Dynamic viscosity	newton-second per square meter	N s/m^2
Work, energy, quantity of heat	joule	J (N m)
Power	watt	W (J/s)
Electric charge	coulomb	C (A s)
Voltage, potential difference, electrotive force	volt	V (W/A)
Electric field strength	volt per meter	V/m
Electric resistance	ohm	Ω (V/A)
Electric capacitance	farad	F (A s/V)
Magnetic flux	weber	Wb (V s)
Inductance	henry	H (V s/A)
Magnetic flux density	tesla	T (Wb/m^2)
Magnetic field strength	ampere per meter	A/m
Magnetomotive force	ampere	A
Luminous flux	lumen	lm (cd sr)
Luminance	candela per square meter	cd/m^2
Illumination	lux	lx (lm/m^2)

USE OF TABLES

Following are step by step directions for the solution to an example conversion problem. The example is: Convert 12 3/4 inches to centimeters.

1. Convert all fractions to decimals. (Refer to table B-4.)

   12 3/4 = 12.75

2. Refer to table B-5 and find the column for the unit which you have. This would be the column labeled “INCHES” in the “Length” table.

3. Locate the numeral 1 in the column labeled “INCHES.”

4. Locate the column labeled “CENTIMETERS.”

5. Read the number in the CENTIMETERS column that is in direct line with the numeral 1 located in the INCHES column.

   Read 2.540

6. Multiply the number of inches of this example by the conversion factor to obtain the number of centimeters.

   2.540 times 12.75 equals 32.385

7. Round off the answer to not over four significant figures (four numbers counting from the first non-zero number on the left. Fewer significant figures may be used depending on the accuracy of measurement and the tolerances allowed. For most work in this manual, centimeters would be expressed as three significant figures.

   12 3/4 inches = 32.4 centimeters

Table B-4. Fraction/Decimal/Millimeter Conversion Chart

Fractions	Dec Equiv	MM Equiv	Fractions	Dec Equiv	MM Equiv
1/64	0.01562	0.397	33/64	0.515625	13.097
1/32	0.03125	0.794	17/32	0.53125	13.494
3/64	0.04688	1.191	35/64	0.546875	13.891
1/16	0.0625	1.588	9/16	0.5625	14.288
5/64	0.078125	1.984	37/64	0.578125	14.684
3/32	0.09375	2.381	19/32	0.59375	15.081
7/64	0.109375	2.778	39/64	0.609375	15.478
1/8	0.125	3.175	5/8	0.625	15.875
9/64	0.140625	3.572	41/64	0.640625	16.272
5/32	0.15625	3.969	21/32	0.65625	16.669
11/64	0.171875	4.366	43/64	0.671875	17.066
3/16	0.1875	4.762	11/16	0.6875	17.462
13/64	0.203125	5.159	45/64	0.703125	17.859
7/32	0.21875	5.556	23/32	0.71875	18.256
15/64	0.234375	5.953	47/64	0.734375	18.653
1/4	0.25	6.350	3/4	0.75	19.050
17/64	0.265625	6.747	49/64	0.765625	19.447
9/32	0.28/125	7.144	25/32	0.78125	19.844
19/64	0.296875	7.541	51/64	0.796875	20.241
5/16	0.3125	7.938	13/16	0.8125	20.638
21/64	0.328125	8.334	53/64	0.828125	21.034
11/32	0.34375	8.731	27/32	0.84375	21.431
23/64	0.359375	9.128	55/64	0.859375	21.828
3/8	0.375	9.525	7/8	0.875	22.225
25/64	0.390625	9.922	57/64	0.890625	22.622
13/32	0.40625	10.319	29/32	0.90625	23.019
27/64	0.421875	10.716	59/64	0.921875	23.416
7/16	0.4375	11.112	15/16	0.9375	23.812
29/64	0.453125	11.509	61/64	0.953125	24.209
15/32	0.46875	11.906	31/32	0.96875	24.606
31/64	0.484375	12.303	63/64	0.984375	25.003
1/2	0.5	12.700	1	1.0	25.400

Table B-5. Metric Unit Conversions

Length

Millimeters	Centimeters	Inches	Feet	Yards	Meters
1.0	0.1000	0.03937	0.003281	0.001094	0.001000
10.0	1.0	0.3937	0.03281	0.01094	0.01000
25.40	2.540	1.0	0.08333	0.02778	0.0254
304.8	30.48	12.0	1.0	0.3333	0.3048
914.4	91.44	36.0	3.000	1.0	0.9144
1000.0	100.0	39.37	3.281	1.094	1.0

Weight

Grams	Kilograms	Grains	Ounces Avoirdupois	Pounds Avoirdupois
1000.0	1.0	15,432.0	35.27	2.205
1.0	0.0010	15,432	0.03527	0.002205
0.06480	0.00006480	1.0	0.002286	0.0001429
28.35	0.02835	437.5	1.0	0.0625
453.6	0.4536	7,000.0	16.0	1.0

Velocity

Meters/Sec	Kilometers/Hr	Feet/Sec	Miles/Hr	Knots
1.0	3.600	3.281	2.237	1.944
0.2778	1.0	0.9113	0.6214	0.5400
0.3048	1.097	1.0	0.6818	0.5925
0.4470	1.609	1.467	1.0	0.8690
0.5144	1.852	1.688	1.1511	1.0

Pressure

Bars (Mega-baryes)	Kilograms/ square cm	Pounds/ square inch	Atmos-pheres	Columns of Mercury (0°C)		Columns of Water (15°C)		
				Meters	Inches	Meters	Inches	Feet
1.0	1.0197	14.50	0.9869	0.7501	29.53	10.21	401.8	33.49
0.9807	1.0	14.22	0.9678	0.7356	28.96	10.01	394.1	32.84
0.06895	0.07031	1.0	0.06805	0.05171	2.036	0.7037	27.70	2.309
1.0133	1.0332	14.70	1.0	0.7600	29.92	10.34	407.1	33.93
1.3332	1.3595	19.34	1.316	1.0	39.37	13.61	535.7	44.64
0.03386	0.03453	0.4912	0.03342	0.02540	1.0	0.3456	13.61	1.134
0.09798	0.09991	1.421	0.09670	0.07349	2.893	1.0	39.37	3.281
0.002489	0.002538	0.03609	0.002456	0.001867	0.0739	0.02540	1.0	0.08333
0.02986	0.03045	0.4331	0.02947	0.02240	0.8819	0.3048	12.0	1.0

Area

Square Meters	Square Centimeters	Square Inches	Square Feet	Square Yards
1.0	10,000.0	1,550.0	10.76	1.196
0.0001	1.0	0.1550	0.001076	0.0001196
0.0006452	6,452.0	1.0	0.006944	0.0007716
0.9290	929.0	144.0	1.0	0.1111
0.8361	8,361.0	1,296.0	9.0000	1.0

Volume

Cubic Inches	Cubic Feet	Cubic Yards	Gallons (U.S.)	Quarts (U.S.)	Liters (Cubic Decimeters)	Cubic Meters	Milliliters (Cubic Centimeters)
1.0	0.0005787	0.00002143	0.004329	0.01732	0.01639	0.00001639	16.39
1,728.0	1.0	0.03704	7.481	29.92	28.32	0.02832	28,320
46,656.0	27.0	1.0	202.2	807.9	764.6	0.7646	764,600
231.0	0.1337	0.004951	1.0	4.000	3.785	0.003785	3,785
57.75	0.03342	0.001238	0.2500	1.0	0.9464	0.0009464	946.4
61.02	0.03531	0.001308	0.2642	1.057	1.0	0.001	1,000
61020	353.1	1.308	264.2	1057	1000.0	1	1,000,000
0.06102	0.00003531	0.000001308	0.0002642	0.001057	0.001	0.000001	1

Table B-6. Alphabetical Index of Metric Unit Conversions

TO CONVERT	INTO	MULTIPLY BY
A		
Abcoulomb	Statcoulombs	2.998×10^{10}
Acre	Sq. chain (Gunters)	10
Acre	Rods	160
Acre	Square links (Gunters)	1×10^{5}
Acre	Hectare or sq.hectometer	0.4047
acres	sq feet	43,560.0
acres	sq meters	4,047.
acres	sq miles	1.562×10^{-3}
acres	sq yards	4,840.
acre-feet	cu feet	43,560.0
acre-feet	gallons	3.259×10^{4}
amperes/sq cm	amps/sq in.	6.452
amperes/sq cm	amps/sq meter	10^{4}
amperes/sq in.	amps/sq cm	0.1550
amperes/sq in.	amps/sq meter	1,550.0
amperes/sq meter	amps/sq cm	10^{-4}
amperes/sq meter	amps/sq in.	6.452×10^{-4}
ampere-hours	coulombs	3,600.0
ampere-hours	faradays	0.03731
ampere-turns	gilberts	1.257
ampere turns/cm	amp-turns/in.	2.540
ampere-turns/cm	amp-turns/meter	100.0
ampere-turns/cm	gilberts/cm	1.257
ampere-turns/in.	amp-turns/cm	0.3937
ampere-turns/in.	amp-turns/meter	39.37
ampere-turns/in.	gilberts/cm	0.4950
ampere-turns/meter	amp/turns/cm	0.01
ampere-turns/meter	amp-turns/in.	0.0254
ampere-turns/meter	gilberts/cm	0.01257
Angstrom unit	Inch	3937×10^{-9}
Angstrom unit	Meter	1×10^{-10}
Angstrom unit	Micron or (Mu)	1×10^{-4}
Are	Acre (US)	0.02471
Ares	sq. yards	119.60
ares	acres	0.02471
ares	sq meters	100.0
Astronomical Unit	Kilometers	1.495×10^{8}
Atmospheres	Ton/sq. inch	0.007348
atmospheres	cms of mercury	76.0
atmospheres	ft of water (at 4°C)	33.90
atmospheres	in. of mercury (at 0°C)	29.92
atmospheres	kgs/sq cm	1.0333
atmospheres	kgs/sq meter	10,332
atmospheres	pounds/sq in.	14.70
atmospheres	tons/sq ft	1.058
B		
Barrels (U.S., dry)	cu. inches	7056.0
Barrels (U.S., dry)	quarts (dry)	105.0
Barrels (U.S., liquid)	gallons	31.5
barrels (oil)	gallons (oil)	42.0
bars	atmospheres	0.9869
bars	dynes/sq cm	10^{4}
bars	kgs/sq meter	1.020×10^{4}
bars	pounds/sq ft	2,089.0
bars	pounds/sq in.	14.50
B (Cont)		
Baryl	Dyne/sq. cm.	1.000
Bolt (US Cloth)	Meters	36.576
BTU	Liter-Atmosphere	10.409
Btu	ergs	1.0550×10^{10}
Btu	foot-lbs	778.3
Btu	gram-calories	252.0
Btu	horsepower-hrs	3.931×10^{-4}
Btu	joules	1,054.8
Btu	kilogram-calories	0.2520
Btu	kilogram-meters	107.5
Btu	kilowatt-hrs	2.928×10^{-4}
Btu/hr	foot-pounds/sec	0.2162
Btu/hr	gram-cal/sec	0.0700
Btu/hr	horsepower-hrs	3.929×10^{-4}
Btu/hr	watts	0.2931
Btu/min	foot-lbs/sec	12.96
Btu/min	horsepower	0.02356
Btu/min	kilowatts	0.01757
Btu/min	watts	17.57
Btu/sq ft/min	watts/sq in.	0.1221
Bucket (Br. dry)	Cubic Cm.	1.818×10^{4}
bushels	cu ft	1.2445
bushels	cu in.	2,150.4
bushels	cu meters	0.03524
bushels	liters	35.24
bushels	pecks	4.0
bushels	pints (dry)	64.0
bushels	quarts (dry)	32.0
C		
Calories, gram(mean)	B.T.U. (mean)	3.9685×10^{-3}
Candle/sq. cm	Lamberts	3.142
Candle/sq. inch	Lamberts	0.4870
Centares (centiares)	sq meters	1.0
Centigrade	Fahrenheit	(C° X 9/5) + 32
centigrams	grams	0.01
Centiliter	Ounce fluid (US)	0.3382
Centiliter	Cubic inch	0.6103
Centiliter	drams	2.705
centiliters	liters	0.01
centimeters	feet	3.281×10^{-2}
centimeters	inches	0.3937
centimeters	kilometers	10^{-5}
centimeters	meters	0.01
centimeters	miles	6.214×10^{-8}
centimeters	millimeters	10.0
centimeters	mils	393.7
centimeters	yards	1.024×10^{-2}
centimeter-dynes	cm-grams	1.020×10^{-3}
centimeter-dynes	meter-kgs	1.020×10^{-8}
centimeter-dynes	pound-feet	7.376×10^{-8}
centimeter-grams	cm-dynes	980.7
centimeter-grams	meter-kgs	10^{-5}
centimeter-grams	pound-feet	7.233×10^{-5}
centimeters of mercury	atmospheres	0.01316
centimeters of mercury	feet of water	0.4461
centimeters of mercury	kgs/sq meter	136.0

Table B-6. Alphabetical Index of Metric Unit Conversions (Cont)

TO CONVERT	INTO	MULTIPLY BY
C (Cont)		
centimeters of mercury	pounds/sq ft	27.85
centimeters of mercury	pounds/sq in.	0.1934
centimeters/sec	feet/min	1.1969
centimeters/sec	feet/sec	0.03281
centimeters/sec	kilometers/hr	0.036
centimeters/sec	knots	0.1943
centimeters/sec	miles/hr	0.02237
centimeters/sec	miles/min	3.728×10^{-4}
centimeters/sec/sec	feet/sec/sec	0.03281
centimeters/sec/sec	kms/hr/sec	0.036
centimeters/sec/sec	meters/sec/sec	0.01
centimeters/sec/sec	miles/hr/sec	0.02237
Chain	Inches	792.00
Chain	meters	20.12
Chains (surveyors' or Gunter's)	yards	22.00
circular mils	sq cms	5.067×10^{-6}
circular mils	sq mils	0.7854
Circumference	Radians	6.283
circular mils	sq inches	7.854×10^{-7}
Cords	cord feet	8
Cord feet	cu. feet	16
Coulomb	Statcoulombs	2.998×10^{9}
coulombs	faradays	1.036×10^{-5}
coulombs/sq cm	coulombs/sq in.	64.52
coulombs/sq cm	coulombs/sq meter	10^{4}
coulombs/sq in.	coulombs/sq cm	0.1550
coulombs/sq in.	coulombs/sq meter	1,550.0
coulombs/sq meter	coulombs/sq cm	10
coulombs/sq meter	coulombs/sq in.	6.452×10^{-4}
cubic centimeters	cu feet	3.531×10^{-5}
cubic centimeters	cu inches	0.06102
cubic centimeters	cu meters	10^{-6}
cubic centimeters	cu yards	1.308×10^{-6}
cubic centimeters	gallons (U.S. liq.)	2.642×10^{-4}
cubic centimeters	liters	0.001
cubic centimeters	pints (U.S. liq.)	2.113×10^{-3}
cubic centimeters	quarts (U.S. liq.)	1.057×10^{-3}
cubic feet	bushels (dry)	0.8036
cubic feet	cu cms	28,320.0
cubic feet	cu inches	1,728.0
cubic feet	cu meters	0.02832
cubic feet	cu yards	0.03704
cubic feet	gallons (U.S. liq.)	7.48052
cubic feet	liters	28.32
cubic feet	pints (U.S. liq.)	59.84
cubic feet	quarts (U.S. liq.)	29.92
cubic feet/min	cu cms/sec	472.0
cubic feet/min	gallons/sec	0.1247
cubic feet/min	liters/sec	0.4720
cubic feet/min	pounds of water/min	62.43
cubic feet/sec	million gals/day	0.646317
cubic feet/sec	gallons/min	448.831
cubic inches	cu cms	16.39
cubic inches	cu feet	5.787×10^{-4}
cubic inches	cu meters	1.639×10^{-5}
cubic inches	cu yards	2.143×10^{-5}
C (Cont)		
cubic inches	gallons	4.329×10^{-3}
cubic inches	liters	0.01639
cubic inches	mil-feet	1.061×10^{5}
cubic inches	pints(U.S. liq.)	0.03463
cubic inches	quarts(U.S. liq.)	0.01732
cubic meters	bushels (dry)	28.38
cubic inches	cu yards	2.143×10^{-5}
cubic meters	cu cms	10^{4}
cubic meters	cu feet	35.31
cubic meters	cu inches	61,023.0
cubic meters	cu yards	1.308
cubic meters	gallons (U.S. liq.)	264.2
cubic meters	liters	1,000.0
cubic meters	pints(U.S. liq.)	2,113.0
cubic meters	quarts (U.S. liq.)	1,057.0
cubic yards	cu cms	7.646×10^{5}
cubic yards	cu feet	27.0
cubic yards	cu inches	46,656.0
cubic yards	cu meters	0.7646
cubic yards	gallons (U.S. liq.)	202.0
cubic yards	liters	764.6
cubic yards	pints (U.S. liq.)	1,615.9
cubic yards	quarts (U.S. liq.)	807.9
cubic yards/min	cubic ft/sec	0.45
cubic yards/min	gallons/sec	3.367
cubic yards/min	liters/sec	12.74
D		
Dalton	Gram	1.650×10^{-24}
days	seconds	86,400.0
decigrams	grams	0.1
deciliters	liters	0.1
decimeters	meters	0.1
degrees (angle)	quadrants	0.01111
degrees (angle)	radians	0.01745
degrees (angle)	seconds	3,600.0
degrees/sec	radians/sec	0.01745
degrees/sec	revolutions/min	0.1667
degrees/sec	revolutions/sec	2.778×10^{-3}
dekagrams	grams	10.0
dekaliters	liters	10.0
dekameters	meters	10.0
Drams (apothecaries' or troy)	ounces (avoirdupois)	0.1371429
Drams (apothecaries' or troy)	ounces (troy)	0.125
Drams (U.S., fluid or apoth.)	cubic cm.	3.6967
drams	grams	1.7718
drams	grains	27.3437
drams	ounces	0.0625
Dyne/cm	Erg/sq. millimeter	0.01
Dyne/sq. cm.	Atmospheres	9.869×10^{-7}
Dyne/sq. cm.	Inch of Mercury at 0°C	2.953×10^{-5}
Dyne/sq.cm.	Inch of Water at 4°C	4.015×10^{-4}
dynes	grams	1.020×10^{-3}
dynes	joules/cm	10^{-7}
dynes	joules/meter (newtons)	10^{-5}

Table B-6. Alphabetical Index of Metric Unit Conversions (Cont)

TO CONVERT	INTO	MULTIPLY BY
	D (Cont)	
dynes	kilograms	1.020×10^{-6}
dynes	poundals	7.233×10^{-5}
dynes	pounds	2.248×10^{-6}
dynes/sq cm	bars	10^{-6}
	E	
Ell	Cm.	114.30
Ell	Inches	45
Em, Pica	Inch	0.167
Em, Pica	Cm.	0.4233
Erg/sec	Dyne - cm/sec	1.000
ergs	Btu	9.480×10^{-11}
ergs	dyne-centimeters	1.0
ergs	foot-pounds	7.367×10^{-8}
ergs	gram-calories	0.2389×10^{-7}
ergs	gram-cms	1.020×10^{-3}
ergs	horsepower-hrs	3.7250×10^{-14}
	E (Cont)	
ergs	joules	10^{-7}
ergs	kg-calories	2.389×10^{-11}
ergs	kg-meters	1.020×10^{-8}
ergs	kilowatt-hrs	0.2778×10^{-13}
ergs	watt-hours	0.2778×10^{-18}
ergs/sec	Btu/min	5.688×10^{-6}
ergs/sec	ft-lbs/min	4.427×10^{-6}
ergs/sec	ft-lbs/sec	7.3756×10^{-8}
ergs/sec	horsepower	1.341×10^{-10}
ergs/sec	kg-calories/min	1.433×10^{-9}
ergs/sec	kilowatts	10^{-10}
	F	
farads	microfarads	10^{6}
Faraday/sec	Ampere (absolute)	9.6500×10^{4}
faradays	ampere-hours	26.80
faradays	coulombs	9.649×10^{4}
Fathom	Meter	1.828804
fathoms	feet	6.0
feet	centimeters	30.48
feet	kilometers	3.048×10^{-4}
feet	meters	0.3048
feet	miles (naut.)	1.645×10^{-4}
feet	miles (stat.)	1.894×10^{-4}
feet	millimeters	304.8
feet	mils	1.2×10^{4}
feet of water	atmospheres	0.02950
feet of water	in. of mercury	0.8826
feet of water	kgs/sq cm	0.03048
feet of water	kgs/sq meter	304.8
feet of water	pounds/sq ft	62.43
feet of water	pounds/sq in	0.4335
feet/min	cms/sec	0.5080
feet/min	feet/sec	0.01667
feet/min	kms/hr	0.01829
feet/min	meters/min	0.3048
feet/min	miles/hr	0.01136
feet/sec	cms/sec	30.48
	F (Cont)	
feet/sec	kms/hr	1.097
feet/sec	knots	0.5921
feet/sec	meters/min	18.29
feet/sec	miles/hr	0.6818
feet/sec	miles/min	0.01136
feet/sec	cms/sec	30.48
feet/sec/sec	cms/sec/sec	30.48
feet/sec/sec	kms/hr/sec	1.097
feet/sec/sec	meters/sec/sec	0.3048
feet/sec/sec	miles/hr/sec	0.6818
feet/100 feet	per cent grade	1.0
Foot - candle	Lumen/sq. meter	10.764
foot-pounds	Btu	1.286×10^{-3}
foot-pounds	ergs	1.356×10^{7}
foot-pounds	gram-calories	0.3238
foot-pounds	hp-hrs	5.050×10^{-7}
foot-pounds	joules	1.356
foot-pounds	kg-calories	3.24×10^{-4}
foot-pounds	kg-meters	0.1383
foot-pounds	kilowatt-hrs	3.766×10^{-7}
foot-pounds/min	Btu/min	1.286×10^{-3}
foot-pounds/min	foot-pounds/sec	0.01667
foot-pounds/min	horsepower	3.030×10^{-5}
foot-pounds/min	kg-calories/min	3.24×10^{-4}
foot-pounds/min	kilowatts	2.260×10^{-5}
foot-pounds/sec	Btu/hr	4.6263
foot-pounds/sec	Btu/min	0.07717
foot-pounds/sec	horsepower	1.818×10^{-3}
foot-pounds/sec	kg-calories/min	0.01945
foot-pounds/sec	kilowatts	1.356×10^{-3}
Furlongs	miles(U.S.)	0.125
furlongs	rods	40.0
furlongs	feet	660.0
	G	
gallons	cu cms	3,785.0
gallons	cu feet	0.1337
gallons	cu inches	231.0
gallons	cu meters	3.785×10^{-3}
gallons	cu yards	4.951×10^{-3}
gallons	liters	3.785
gallons (liq Br. Imp.)	gallons (U.S. liq)	1.20095
gallons (U.S.)	gallons (Imp.)	0.83267
gallons of water	pounds of water	8.3453
gallons/min	cu ft/sec	2.228×10^{-3}
gallons/min	liters/sec	0.06308
gallons/min	cu ft/hr	8.0208
gausses	lines/sq in.	6.452
gausses	webers/sq cm	10^{-8}
gausses	webers/sq in.	6.452×10^{-8}
gausses	webers/sq meter	10^{-4}
gilberts	ampere-turns	0.7958
gilberts/cm	amp-turns/cm	0.7958
gilberts/cm	amp-turns/in	2.021
gilberts/cm	amp-turns/meter	79.58
Gills (British)	cubic cm.	142.07
gills	liters	0.1183
gills	pints (liq.)	0.25

Table B-6. Alphabetical Index of Metric Unit Conversions (Cont)

TO CONVERT	INTO	MULTIPLY BY
G (Cont)		
Grade	Radian	0.01571
Grains	drams (avoirdupois)	0.03657143
grains (troy)	grains (avdp)	1.0
grains (troy)	grams	0.06480
grains (troy)	ounces (avdp)	2.0833×10^{-3}
grains (troy)	pennyweight (troy)	0.04167
grains/U.S. gal	parts/million	17.118
grains/U.S. gal	pounds/million gal	142.86
grains/Imp. gal	parts/million	14.286
grams	dynes	980.7
grams	grains	15.43
grams	joules/cm	9.807×10^{-5}
grams	joules/meter (newtons)	$9,807 \times 10^{-3}$
grams	kilograms	0.001
grams	milligrams	1.000.0
grams	ounces (avdp)	0.03527
grams	ounces (troy)	0.03215
grams	poundals	0.07093
grams	pounds	2.205×10^{-3}
grams/cm	pounds/inch	5.600×10^{-3}
grams/cu cm	pounds/cu ft	62.43
grams/cu cm	pounds/cu in	0.03613
grams/cu cm	pounds/mil-foot	3.405×10^{-7}
grams/liter	grains/gal	58.417
grams/liter	pounds/1.000 gal	8.345
grams/liter	pounds/cu ft	0.062427
grams/liter	parts/million	1,000.0
grams/sq cm	pounds/sq ft	2.0481
gram-calories	Btu	3.9683×10^{-3}
gram-calories	ergs	4.1868×10^{7}
gram-calories	foot-pounds	3.0880
gram-calories	horsepower-hrs	1.5596×10^{-6}
gram-calories	kilowatt-hrs	1.1630×10^{-6}
gram-calories	watt-hrs	1.1630×10^{-3}
grams-calories/sec	Btu/hr	14.286
gram-centimeters	Btu	9.297×10^{-8}
gram-centimeters	ergs	980.7
gram-centimeters	joules	9.807×10^{-5}
gram-centimeters	kg-cal	2.343×10^{-8}
gram-centimeters	kg-meters	10^{-5}
H		
Hand	Cm.	10.16
hetacres	acres	2.471
hectares	sq feet	1.076×10^{5}
hectograms	grams	100.0
hectoliters	liters	100.0
hectometers	meters	100.0
hectowatts	watts	100.0
henries	millihenries	1,000.0
Hogsheads (British)	cubic ft.	10.114
Hogsheads (U.S.)	cubic ft.	8.42184
Hogsheads (U.S)	gallons (U.S.)	63
horsepower	Btu/min	42.44
horsepower	foot-lbs/min	33,000.0
horsepower	foot-lbs/sec	550.0
horsepower (metric) (542.5 ft lb/sec)	horsepower (550 ft lb/sec)	0.9863
H (Cont)		
horsepower (550 ft lb/sec)	horsepower (metric) (542.5 ft lb/sec)	1.014
horsepower	kg-calories/min	10.68
horsepower	kilowatts	0.7457
horsepower	watts	745.7
horsepower (boiler)	Btu/hr	33.479
horsepower (boiler)	kilowatts	9.803
horsepower-hrs	Btu	2,547.0
horsepower-hrs	ergs	2.6845×10^{13}
horsepower-hrs	foot-lbs	1.98×10^{4}
horsepower-hrs	gram-calories	641,190.0
horsepower-hrs	joules	2.684×10^{4}
horsepower-hrs	kg-calories	641.1
horsepower-hrs	kg-meters	2.737×10^{5}
horsepower-hrs	kilowatts-hrs	0.7457
hours	days	4.167×10^{-2}
hours	weeks	5.952×10^{-3}
Hundredweights (long)	pounds	112
Hundredweights (long)	tons (long)	0.05
Hundredweights (short)	ounces (avoirdupois)	1600
Hundredweights (short)	pounds	100
Hundredweights (short)	tons (metric)	0.0453592
Hundredweights (short)	tons (long)	0.0446429
I		
inches	centimeters	2.540
inches	meters	2.540×10^{-2}
inches	miles	1.578×10^{-5}
inches	millimeters	25.40
inches	mils	1,000.0
inches	yards	2.778×10^{-2}
inches of mercury	atmospheres	0.03342
inches of mercury	feet of water	1.133
inches of mercury	kgs/sq cm	0303453
inches of mercury	kgs sq meter	345.3
inches of mercury	pounds/sq ft	70.73
inches of mercury	pounds/sq in.	0.4912
inches of water (at 4°C)	atmospheres	2.458×10^{-3}
inches of water (at 4°C)	inches of mercury	0.07355
inches of water (at 4°C)	kgs/sq cm	2.540×10^{-3}
inches of water (at 4°C)	ounces/sq in.	0.5781
inches of water (at 4°C)	pounds/sq ft	5.204
inches of water (at 4°C)	pounds/sq in.	0.03613
International Ampere	Ampere (absolute)	0.9998
International Volt	Volts (absolute)	1.0003
International volt	Joules (absolute)	$1\text{-}593 \times 10^{-19}$
International volt	Joules	9.654×10^{4}
J		
joules	Btu	9.480×10^{-4}
joules	ergs	10^{7}
joules	foot-pounds	0.7376
joules	kg calories	2.389×10^{-4}
joules	kg-meters	0.1020
joules	watt-hrs	2.778×10^{-4}
joules/cm	grams	1.020×10^{4}
joules/cm	dynes	10^{7}

Table B-6. Alphabetical Index of Metric Unit Conversions (Cont)

TO CONVERT	INTO	MULTIPLY BY
	J (Cont)	
joules/cm	joules/meter (newtons)	100.0
joules/cm	poundals	723.3
joules/cm	pounds	22.48
	K	
kilograms	dynes	980,665.0
kilograms	grams	1,000.0
kilograms	joules/cm	0.09807
kilograms	joules/meter (newtons)	9.807
kilograms	poundals	70.93
kilograms	pounds	2.205
kilograms	tons (long)	9.842×10^{-4}
kilograms	tons (short)	1.102×10^{-3}
kilograms/cu meter	grams/cu cm	0.001
kilograms/cu meter	pounds/cu ft	0.06243
kilograms/cu meter	pounds/cu in.	3.613×10^{-5}
kilograms/cu meter	pounds/mil-foot	3.405×10^{-10}
kilograms/meter	pounds/ft	0.6720
Kilogram/sq. cm.	Dynes	980,665
kilograms/sq cm	atmospheres	0.9678
kilograms/sq cm	feet of water	32.81
kilograms/sq cm	inches of mercury	28.96
kilograms/sq cm	pounds/sq ft	2,048.0
kilograms/sq cm	pounds/sq in.	14.22
kilograms/sq meter	atmospheres	9.678×10^{-5}
kilograms/sq meter	bars	98.07×10^{-6}
kilograms/sq meter	feet of water	3.281×10^{-3}
kilograms/sq meter	inches of mercury	2.896×10^{-3}
kilograms/sq meter	pounds/sq ft	0.2048
kilograms/sq meter	pounds/sq in.	1.422×10^{-3}
kilograms/sq mm	kgs/sq meter	10^6
kilogram-calories	Btu	3.968
kilogram-calories	foot-pounds	3,088
kilogram-calories	hp-hrs	1.560×10^{-3}
kilogram-calories	joules	4,186
kilogram-calories	kg-meters	426.9
kilogram-calories	kilojoules	4.186
kilogram-calories	kilowatt-hrs	1.163×10^{-3}
kilogram meters	Btu	9.294×10^{-3}
kilogram meters	ergs	9.804×10^7
kilogram meters	foot-pounds	7.233
kilogram meters	joules	9.804
kilogram meters	kg-calories	2.342×10^{-3}
kilogram meters	kilowatt-hrs	2.723×10^{-6}
kilolines	maxwells	1,000.0
kiloliters	liters	1,000.0
kilometers	centimeters	10^5
kilometers	feet	3,281.0
kilometers	inches	3.937×10^4
kilometers	meters	1,000.0
kilometers	miles	0.6214
kilometers	millimeters	10^6
kilometers	yards	1,094.0
kilometers/hr	cms/sec	27.78
kilometers/hr	feet/min	54.68
kilometers/hr	feet/sec	0.9113
kilometers/hr	knots	0.5396
kilometers/hr	meters/min	16.67
kilometers/hr	miles/hr	0.6214
	K (Cont)	
kilometers/hr/sec	cms/sec/sec	27.78
kilometers/hr/sec	ft/sec/sec	0.9113
kilometers/hr/sec	meters/sec/sec	0.2778
kilometers/hr/sec	miles/hr/sec	0.6214
kilowatts	Btu/min	56.92
kilowatts	foot-lbs/min	4.426×10^4
kilowatts	foot-lbs/sec	737.6
kilowatts	horsepower	1.341
kilowatts	kg-calories/min	14.34
kilowatts	watts	1,000.0
kilowatt-hrs	Btu	3,413.0
kilowatt-hrs	ergs	3.600×10^{13}
kilowatt-hrs	foot-lbs	2.655×10^4
kilowatt-hrs	gram-calories	859,850.0
kilowatt-hrs	horsepower-hrs	1.341
kilowatt-hrs	joules	3.6×10^4
kilowatt-hrs	kg-calories	860.5
kilowatt-hrs	kg-meters	3.671×10^5
kilowatt-hrs	pounds of water evaporated from and at 212°F	3.53
kilowatt-hrs	pounds of water raised from 62° to 212°F	22.75
knots	feet/hr	6,080.0
knots	kilometers/hr	1.8532
knots	nautical miles/hr	1.0
knots	statute miles/hr	1.151
knots	yards/hr	2,027.0
knots	feet/sec	1.689
	L	
league	miles(approx.)	3.0
Light year	Miles	5.9×10^{12}
Light year	Kilometers	9.46091×10^{12}
lines/sq cm	gausses	1.0
lines/sq in.	gausses	0.1550
lines/sq in.	webers/sq cm	1.550×10^{-9}
lines/sq in.	webers/sq in.	10^{-8}
lines/sq in.	webers/sq meter	1.550×10^{-5}
links (engineer's)	inches	12.0
links (surveyor's)	inches	7.92
liters	bushels (U.S. dry)	0.02838
liters	cu cm	1,000.0
liters	cu inches	61.02
liters	cu meters	0.001
liters	cu yards	1.308×10^{-3}
liters	gallons (U.S. liq.)	0.2642
liters	pints (U.S. liq.)	2.113
liters	quarts (U.S. liq.)	1.057
liters/min	cu ft/sec	5.886×10^{-4}
liters/min	gals/sec	4.403×10^{-3}
lumens/sq ft	foot-candles	1.0
Lumen	Spherical candle power	0.07958
Lumen	Watt	0.001496
Lumen/sq. ft.	Lumen/sq. meter	10.76
lux	foot-candles	0.0929

Table B-6. Alphabetical Index of Metric Unit Conversions (Cont)

TO CONVERT	INTO	MULTIPLY BY
	M	
maxwells	kilolines	0.001
maxwells	webers	10^{-3}
megalines	maxwells	10^{4}
megohms	microhms	10^{12}
megohms	ohms	10^{6}
meters	centimeters	100.0
meters	feet	3.281
meters	inches	39.37
meters	kilometers	0.001
meters	miles (stat.)	6.214×10^{-4}
meters	millimeters	1,000.0
meters	yards	1.094
meters	yards	1.179
meters/min	cms/sec	1.667
meters/min	feet/min	3.281
meters/min	feet/sec	0.05468
meters/min	kms/hr	0.06
meters/min	knots	0.03238
meters/min	miles/hr	0.03728
meters/sec	feet/min	196.8
meters/sec	feet/sec	3.281
meters/sec	kilometers/hr	3.6
meters/sec	kilometers/min	0.06
meters/sec	miles/hr	2.237
meters/sec	miles/min	0.03728
meters/sec/sec	cms/sec/sec	100.0
meters/sec/sec	ft/sec/sec	3.281
meters/sec/sec	kms/hr/sec	3.6
meters/sec/sec	miles/hr/sec	2.237
meter-kilograms	cm-dynes	9.807×10^{7}
meter-kilograms	cm-grams	10^{5}
meter-kilograms	pound-feet	7.233
microfarad	farads	10^{-6}
micrograms	grams	10^{-6}
microhms	megohms	10^{-12}
microhms	ohms	10^{-6}
microliters	liters	10^{-6}
Microns	meters	1×10^{-6}
miles (naut.)	feet	6,080.27
miles (naut.)	kilometers	1.853
miles (naut.)	meters	1,853.0
miles (naut.)	miles (statute)	1.1516
miles (naut.)	yards	2,027.0
miles (statute)	centimeters	1.609×10^{5}
miles (statute)	feet	5,280.0
miles (statute)	inches	6.336×10^{4}
miles (statute)	kilometers	1.609
miles (statute)	meters	1,609.0
miles (statute)	miles (naut)	0.8684
miles (statute)	yards	1,760.0
miles/hr	cms/sec.	44.70
miles/hr	feet/min	88.0
miles/hr	feet/sec	1.467
miles/hr	kms/hr	1.609
miles/hr	kms/min	0.02682
miles/hr	kms/min	0.02682
miles/hr	knots	0.8684
miles/hr	meters/min	26.82
miles/hr	miles/min	0.1667

TO CONVERT	INTO	MULTIPLY BY
	M (Cont)	
miles/hr/sec	cms/sec/sec	44.70
miles/hr/sec	feet/sec/sec	1.467
miles/hr/sec	kms/hr/sec	1.609
miles/hr/sec	meters/sec/sec	0.4470
miles/min	cms/sec	2,682.0
miles/min	feet/sec	88.0
miles/min	kms/minn	1.609
miles/min	knots/min	0.8684
miles/min	miles/hr	60.0
mil-feet	cu inches	9.425×10^{-6}
milliers	kilograms	1,000.0
Millimicrons	meters	1×10^{-9}
Milligrams	grains	0.01543236
milligrams	grams	0.001
milligrams/liter	parts/million	1.0
millihenries	henries	0.001
milliliters	liters	0.001
millimeters	centimeters	0.1
millimeters	feet	3.281×10^{-3}
millimeters	inches	0.03937
millimeters	kilometers	10^{-6}
millimeters	meters	0.001
millimeters	miles	6.214×10^{-7}
millimeters	mils	39.37
millimeters	yards	1.094×10^{-3}
million gals/day	cu ft/sec	1.54723
mils	centimeters	2.540×10^{-3}
mils	feet	8.333×10^{-5}
mils	inches	0.001
mils	kilometers	2.540×10^{-8}
mils	yards	2.778×10^{-5}
miner's inches	cu ft/min	1.5
Minims (British)	cubic cm.	0.059192
Minims (U.S., fluid)	cubic cm.	0.061612
minutes (angles)	degrees	0.01667
minutes (angles)	quadrants	1.852×10^{-4}
minutes (angles)	radians	2.909×10^{-4}
minutes (angles)	seconds	60.0
myriagrams	kilograms	10.0
myriameters	kilometers	10.0
myriawatts	kilowatts	10.0
	N	
nepers	decibels	8.686
Newton	Dynes	1×10^{5}
	O	
OHM (International)	OHM (absolute)	1.0005
ohms	megohms	10^{-6}
ohms	microhms	10^{6}
ounces	drams	16.0
ounces	grains	437.5
ounces	grams	28.349527
ounces	pounds	0.0625
ounces	ounces (troy)	0.9115
ounces	tons (long)	2.790×10^{-5}
ounces	tons (metric)	2.835×10^{-5}

Table B-6. Alphabetical Index of Metric Unit Conversions (Cont)

TO CONVERT	INTO	MULTIPLY BY
O (Cont)		
ounces (fluid)	cu inches	1.805
ounces (fluid)	liters	0.02957
ounces (troy)	grains	480.0
ounces (troy)	grams	31.103481
ounces (troy)	ounces (avdp)	1.09714
ounces (troy)	pennyweights (troy)	20.0
ounces (troy)	pounds (troy)	0.08333
Ounce/sq. inch	Dynes/sq cm	0.4309
ounces/sq in.	pounds/sq in.	0.0625
P		
Parsec	Miles	19×10^{12}
Parsec	Kilometers	3.084×10^{13}
part-/million	grains/U.S. gal	0.0584
parts/million	grains/Imp. gal	0.07016
parts/million	pounds/million gal	8.345
Pecks (British)	cubic inches	554.6
Pecks (British)	liters	9.091901
Pecks (U.S.)	bushels	0.25
Pecks (U.S.)	cubic inches	37.605
Pecks (U.S.)	liters	8.809582
Pecks (U.S.)	quarts (dry)	8
pennyweights (troy)	grains	24.0
pennyweights (troy)	ounces (troy)	0.05
pennyweights (troy)	grams	1.55517
pennyweights (troy)	pounds (troy)	4.1667×10^{-3}
pints (dry)	cu inches	33.60
pints (liq.)	cu cms.	473.2
pints (liq.)	cu feet	0.01671
pints (liq.)	cu inches	28.87
pints (liq.)	cu meters	4.732×10^{-4}
pints (liq.)	cu yards	6.189×10^{-4}
pints (liq.)	gallons	0.125
pints (liq.)	liters	0.4732
pints (liq.)	quarts (liq.)	0.5
Planck's quantum	Erg second	6.624×10^{-27}
Poise	Gram/cm. sec.	1.00
Pounds (avoirdupois)	ounces (troy)	14.5833
poundals	dynes	13,826.0
poundals	grams	14.10
poundals	joules/cm	1.383×10^{-3}
poundals	joules/meter (newtons)	0.1383
poundals	kilograms	0.01410
poundals	pounds	0.03108
pounds	drams	256.0
pounds	dynes	44.4823×10^{4}
pounds	grains	7,000.0
pounds	grams	453.5924
pounds	joules/cm	0.04448
pounds	joules/meter (newtons)	4.448
pounds	kilograms	0.4536
pounds	ounces	16.0
pounds	ounces (troy)	14.5833
pounds	poundals	32.17
pounds	pounds (troy)	1.21528
pounds	tons (short)	0.0005
pounds (troy)	grains	5,760.0
P (Cont)		
pounds (troy)	grams	373.24177
pounds (troy)	ounces (avdp.)	13.1657
pounds (troy)	pennyweights (troy)	240.0
pounds (troy)	pounds (avdp.)	0.822857
pounds (troy)	tons (long)	3.6735×10^{-4}
pounds (troy)	tons (metric)	3.7324×10^{-4}
pounds (troy)	tons (short)	4.1143×10^{-4}
pounds of water	cu feet	0.01602
pounds of water	cu inches	27.68
pounds of water/min	cu ft/sec	2.670×10^{-4}
pound-feet	cm-dynes	1.356×10^{7}
pound-feet	cm-grams	13,825.0
pound-feet	meter-kgs	0.1383
pounds/cu ft	grams/cu cm	0.01602
pounds/cu ft	kgs/cu meter	16.02
pounds/cu ft	pounds/cu in.	5.787×10^{-4}
pounds/cu ft	pounds/mil-loot	5.456×10^{-9}
pounds/cu in.	gms/cu cm	27.68
pounds/cu in.	kgs/cu meter	2.768×10^{4}
pounds/cu in.	pounds/cu ft	1,728.0
pounds/cu in.	pounds/mil-foot	9.425×10^{-6}
pounds/ft	kgs-meter	1.488
pounds/in.	gms/cm	178.6
pounds/mil-foot	gms/cu cm	2.306×10^{6}
pounds/sq ft	atmospheres	4.725×10^{-4}
pounds/sq ft	feet of water	0.01602
pounds/sq ft	inches of mercury	0.01414
pounds/sq ft	kgs/sq meter	4.882
pounds/sq ft	pounds/sq in.	6.944×10^{-3}
pounds/sq. in.	atmospheres	0.06804
pounds/sq in.	feet of water	2.307
pounds/sq in.	inches of mercury	2.036
pounds/sq in.	kgs/sq meter	703.1
pounds/sq in.	pounds/sq ft	144.0
Q		
quadrants (angle)	degrees	90.0
quadrants (angle)	minutes	5,400.0
quadrants (angle)	radians	1.571
quadrants (angle)	seconds	3.24×10^{5}
quarts (dry)	cu inches	67.20
quarts (liq.)	cu cms	946.4
quarts (liq)	cu feet	0.03342
quarts (liq.)	cu inches	57.75
quarts (liq.)	cu meters	9.464×10^{-4}
quarts (liq.)	cu yards	1.238×10^{-3}
quarts (liq.)	gallons	0.25
quarts (liq.)	liters	0.9463
R		
radians	degrees	57.30
radians	minutes	3,438.0
radians	quadrants	0.6366
radians	seconds	2.063×10^{5}
radians/sec	degrees/sec	57.30
radians/sec	revolutions/min	9.549

Table B-6. Alphabetical Index of Metric Unit Conversions (Cont)

TO CONVERT	INTO	MULTIPLY BY
R (Cont)		
radians/sec	revolutions/sec	0.1592
radians/sec/sec	revs/min/min	573.0
radians/sec/sec	revs/min/sec	9.549
radians/sec/sec	revs/sec/sec	0.1592
revolutions	degrees	360.0
revolutions	quadrants	4.0
revolutions	radians	6.283
revolutions/min	degrees/sec	6.0
revolutions/min	radians/sec	0.1047
revolutions/min	revs/sec	0.01667
revolutions/miri/min	radians/sec/sec	1.745×10^{-3}
revolutions/min/min	revs/min/sec	0.01667
revolutions/min/min	revs/sec/sec	2.778×10^{-4}
revolutions/sec	degrees/sec	360.0
revolutions/sec	radians/sec	6.283
revolutions/sec	revs/min	60.0
revolutions/sec/sec	radians/sec/sec	6.283
revolutions/sec/sec	revs/min/min	3,600.0
revolutions/sec/sec	revs/min/sec	60.0
Rod	Chain (Gunters)	0.25
Rod	Meters	5.029
Rods (Surveyors' meas.)	yards	5.5
rods	feet	16.5
S		
Scruples	grains	20
seconds (angle)	degrees	2.778×10^{-4}
seconds (angle)	minutes	0.01667
seconds (angle)	quadrants	3.087×10^{-6}
seconds (angle)	radians	4.848×10^{-6}
Slug	Kilogram	14.59
Slug	Pounds	32.17
Sphere	Steradians	12.57
square centimeters	circular mils	1.973×10^{5}
square centimeters	sq feet	1.076×10^{-3}
square centimeters	sq inches	0.1550
square centimeters	sq meters	0.0001
square centimeters	sq miles	3.861×10^{-11}
square centimeters	sq millimeters	100.0
square centimeters	sq yards	1.196×10^{-4}
square feet	acres	2.296×10^{-5}
square feet	sq cms	929.0
square feet	sq inches	144.0
square feet	sq meters	0.09290
square feet	sq miles	3.587×10^{-6}
square feet	sq millimeters	9.290×10^{4}
square feet	sq yards	0.1111
square inches	circular mils	1.273×10^{6}
square inches	sq cms	6.452
square inches	sq feet	6.944×10^{-3}
square inches	sq millimeters	645.2
square inches	sq mils	10 6
square inches	sq yards	7.716×10^{-4}
square kilometers	acres	247.1
square kilometers	sq cms	10 10
square kilometers	sq ft	10.76×10^{6}
square kilometers	sq inches	1.550×10^{9}
S (Cont)		
square kilometers	sq meters	10^{6}
square kilometers	sq miles	0.3861
square kilometers	sq yards	1.196×10^{6}
square meters	acres	2.471×10^{-4}
square meters	sq cms	10^{4}
square meters	sq feet	10.76
square meters	sq inches	1,550.0
square meters	sq miles	3.861×10^{-7}
square meters	sq millimeters	10^{6}
square meters	sq yards	1.196
square miles	acres	640.0
square miles	sq feet	27.88×10^{6}
square miles	sq kms	2.590
square miles	sq meters	2.590×10^{6}
square miles	sq yards	3.098×10^{6}
square millimeters	circular mils	1,973.0
square millimeters	sq cms	0.01
square millimeters	sq feet	1.076×10^{-5}
square millimeters	sq inches	1.550×10^{-3}
square mils	circular mils	1.273
square mils	sq cms	6.452×10^{6}
square mils	sq inches	10^{-6}
square yards	acres	2.066×10^{-4}
square yards	sq cms	8,361.0
square yards	sq feet	9.0
square yards	sq inches	1,296.0
square yards	sq meters	0.8361
square yards	sq miles	3.228×10^{-7}
square yards	sq millimeters	$8{,}361 \times 10^{5}$
T		
temperature (°C) +273	absolute temperature (°C)	1.0
temperature (°C) +17.78	temperature (°F)	1.8
temperature (°F) +460	absolute temperature (°F)	1.0
temperature (°F)32	temperature (°C)	5/9
tons (long)	kilograms	1,016.0
tons (long)	pounds	2,240.0
tons (long)	tons (short)	1.120
tons (metric)	kilograms	1,000.0
tons (metric)	pounds	2,205.0
tons (short)	kilograms	907.1848
tons (short)	ounces	32,000.0
tons (short)	ounces (troy)	29,166.66
tons (short)	pounds	2,000.0
tons (short)	pounds (troy)	2,430.56
tons (short)	tons (long)	0.89287
tons (short)	tons (metric)	0.9078
tons (short)/sq ft	kgs/sq meter	9,765.0
tons (short)/sq ft	pounds/sq in.	2,000.0
tons of water/24 hrs	pounds of water/hr	83.333
tons of water/24 hrs	gallons/min	0.16643
tons of water/24 hrs	cu ft/hr	1.3349

Table B-6. Alphabetical Index of Metric Unit Conversions (Cont)

TO CONVERT	INTO	MULTIPLY BY
	V	
Volt/inch	Volt/cm.	0.39370
Volt (absolute)	Statvolts	0.003336
	W	
watts	Btu/hr	3.4129
watts	Btu/min	0.05688
Watts	ergs/sec	107.0
watts	foot-lbs/min	44.27
watts	foot-lbs/sec	0.7378
watts	horsepower	1.341×10^{-3}
watts	horsepower (metric)	1.360×10^{-3}
watts	kg-calories/min	0.01433
watts	kilowatts	0.001
Watts (Abs.)	B.T.U. (mean)/min.	0.056884
Watts (Abs.)	joules/sec.	1
watt-hours	Btu	3.413
watt-hours	ergs	3.60×10^{10}
watt-hours	foot-pounds	2,656.0
watt-hours	gram-calories	859.85
watt-hours	horsepower-hrs	1.341×10^{-3}
watt-hours	kilogram-calories	0.8605
	W (Cont)	
watt-hours	kilogram-meters	367.2
watt-hours	kilowatt-hrs	0.001
Watt (International)	Watt (absolute)	1.0002
webers	maxwells	10^8
webers	kilolines	10^5
webers/sq in.	gausses	1.550×10^7
webers/sq in.	lines/sq in.	10^8
webers/sq in	webers/sq cm	0.1550
webers/sq in.	webers/sq meter	1,550.0
webers/sq meter	gausses	10^4
webers/sq meter	lines/sq in.	6.452×10^4
webers/sq meter	webers/sq cm	10^{-4}
webers/sq meter	webers/sq in.	6.452×10^{-4}
	Y	
yards	centimeters	91.44
yards	kilometers	9.144×10^{-4}
yards	meters	0.9144×10^{-4}
yards	miles (naut.)	4.934×10^{-4}
yards	miles (stat.)	5.682×10^{-4}
yards	millimeters	914.4

THIS PAGE INTENTIONALLY LEFT BLANK.

APPENDIX C

Appendix C lists the part name, part number and NIIN number of equipment, materials or supplies used in this manual and which are not listed in any IPB. This appendix lists the part name in alphabetical order.

Item Number	Part Number	NIIN Number
Abrasive Mat	MIL-A-9962	00-967-5093
Adhesive, Polyurethane	UR-1092	01-375-7855
Automatic Inflator, FLU-8B/P	849AS150	01-092-3087
Battery, Manganese Dioxide	849AS103 (FW14)	01-334-0724
Brush, Disposable	A-A-289/H-B-643	00-514-2417
Cap, Snap Fastener	M527981-1B	00-276-4954
Cap, Uni-Directional Snap Fastener	MS27983-1	00-891-9073
Cement, Polychloroprene	MIL-A-5540	00-142-9913
Cloth, Aramid, Green	MIL-C-83429	01-147-2064
Cloth, Lint Free	MIL-C-85043	00-044-9281
Cloth, Nylon, Polychloroprene-Coated, Sage Green	MIL-C-19002	00-935-1759
Cloth, Nylon, Polychloroprene-Coated, Yellow	MIL-C-19002	00-935-6427
Cloth, Nylon, Polychloroprene-Coated, Orange	MIL-C-19002	00-060-9136
Cloth, Nylon, Polyurethane-Coated, Typ 1	MIL-C-83489	01-335-3129
Cord, Nylon, Typ 3	MIL-C-5040	00-240-2146
Cord, Nylon, Typ 1	MIL-C-5040	00-240-2154
Cord, Packaging	1138-003-01	01-066-3357
Compound, Corrosion Prevention	MIL-C-85054	01-041-1596
Compound, Silicone	G624	00-880-7616
D-Ring	MA51925-2	00-202-0228
Detergent, General Purpose	MIL-D-16791	00-282-9699
Gage, Dial, Push/Pull	DPPH50	00-473-0108
Die, Cylinder Thread Chaser	1842-008-01	01-069-4040
Duck, Cloth, Nylon	MIL-C-7219	00-765-2863
Grommet, Brass	MS20230B20	00-291-0302
Handle, Beaded Inflation	975AS121-11	01-120-4752
Ink, Marking, Laundry, Black	SPE-92	00-161-4229
Ink, Yellow, Drawing	A-A-59291	00-634-6583

Item Number	Part Number	NIIN Number
Isopropyl Alcohol	TT-I-735A	00-286-5435
Kit, Gasket	105AS100-5	00-498-6964
Kit, Gasket	105AS100-6	00-113-8920
Lubricant, Silicone	DC7	00-975-0712
MEK (Methyl Ethyl Ketone)	TT-M-261	00-281-2762
Multimeter, Digital	8600A	01-010-0088
Nitrogen, Water-Pumped	BB-N-411	86 STOCK#'S
Pencil, Solder	W-S-570	00-204-3855
Post, Snap Fastener	MS27981-5B	00-250-6858
Post, Uni-Directional Snap Fastener	MS27983-4	00-276-4978
Pouch, Dye Marker	68A73D2-41	01-124-3806
Pouch, Flare	68A73D3-61	01-123-2194
Punch, Cutting, 3/16″	3GGG-P-833	00-180-0941
Rivet, Post	MS27986-3B	00-281-4359
Rivet, Cap	MS27986-4B	00-281-2553
Roller, Wooden	GGG-R-00620	00-243-9401
RTV Silicone	DC4	00-843-0802
Scale, Gram	A-A-52021-1	00-514-4117
Screw, Retaining, Piercing Pin	1842-006-01	01-069-6535
Sensor, Plug Cap	1618-012-01 (FW97)	01-092-3088
Signal, Smoke and Illumination, Marine MK-124 MOD 0	—	01-030-8330
Snaphook CWBC1	MIL-S-43770/1	01-187-9402
Socket, Snap Fastener	M527981-3B	00-276-4966
Socket, Uni-Directional Snap Fastener	MS27983-2	00-945-2577
Stud, Uni-Directional Snap Fastener	MS27983-3	00-276-4908
Stud, Snap Fastener	MS27981-4B	00-901-9660
Talc, Technical	MIL-T-50036A	01-080-9589
Tape, Hook, Typ II, 1″ Wide, Sage Green	MIL-F-21840	00-405-2266
Tape, Hook, Typ II, 1-1/2″ Wide, Green	MIL-F-21840	00-425-1294
Tape, Pile, Typ II, 1″ Wide, Sage Green	MIL-F-21840	00-405-2263
Tape, Pile, Typ II, 1-1/2″ Wide, Green	MIL-F-21840	00-425-2264

Item Number	Part Number	NIIN Number
Thread, Nylon, Size A, Typ I	V-T-295	00-204-3803
Thread, Nylon, Size E, Typ II	V-T-295	00-204-3884
Thread, Nylon, Size E, High Temp, Green	MIL-T-83193	00-405-2252
Tool, Valve Core	8769A	01-354-5423
Toluene	TT-T-548	00-281-2002
Pump, Rotary Vacuum	1397B-01	00-052-5018
Pump, Rotary Vacuum	61E44688	00-052-5015
Valve, Inflator, Typ II	MIL-L-25370	00-561-0094
Valve, Pneumatic Inflator	67A319D18-1	01-081-0322
Webbing, Nylon, 3/4″	MIL-W-4088	00-782-3224
Webbing, Nylon, 1″, Typ IV	MIL-T-5038	00-261-8579
Webbing, Nylon Tape, 3/4″ Wide, Typ II	MIL-T-5038	00-176-8083
Webbing, Nylon Tape, 1″ Wide, Green	MIL-T-5038	00-753-6144

THIS PAGE INTENTIONALLY LEFT BLANK.

GLOSSARY

ACB. Abbreviation for Aircrew Systems Bulletin. An ACB is a technical publication issued by NAVAIR which directs a one-time inspection of aircrew life support equipment and contains related instructions. Technical directive code 67 has been assigned to identify ACBs.

ACC. Abbreviation for Aircrew Systems Change. An ACC is a technical publication issued by NAVAIR which directs and provides for, the accomplishment of a change, modification, repositioning or alteration of aircrew life support equipment in service. Technical Directive code 66 has been assigned to identify ACCs.

ACCESSORY. Item attached to a liferaft to improve its effectiveness but not essential to the main function of a raft. For example, a sea anchor and a retaining line are accessories.

ACCESSORY CONTAINER LINE. A 10-foot, 1/8-inch diameter length of nylon cord (MIL-C-5040 Type III) used to secure accessory container to liferaft.

APPROX. Abbreviation for approximately.

AUTOMATIC INFLATOR. An automatic inflation device (FLU-8/P Series) installed on life preservers. The inflator body is constructed with a small explosive charge (squib) and batteries. When the inflator is immersed in water an electrical circuit is completed and fires the squib. The gases from the squib in turn force the piercing pin forward puncturing the CO_2 cylinder which inflates the life preserver.

BACKSTITCH. A stitch made by inserting the needle a stitch length behind and bringing it up a stitch length ahead of the last stitch. Also, sewing back over a row of stitches.

BAG, BALLAST. An open pouch located on under side of one man raft to allow stabilization when boarding.

BARTACK. A concentrated series of zig-zag-like stitches used to reinforce points of stress. A bartack shall have 28 stitches per half-inch (per MIL-O-81900AS).

BEADED INFLATION HANDLE. A handle with beaded grip, attached to inflation assemblies, designed to significantly increase accessibility and to provide a multidirectional pull capability.

BOXSTITCH. A rectangular stitch used to attach and reinforce.

℄. Symbol for centerline.

CAGE. Commercial and Government Entity (CAGE) is a five position alpha-numeric code. CAGE codes are assigned to organizations (entities) that are manufacturers or maintain design control of items of supply procured and cataloged by agencies of the Federal government, Cataloging Handbooks H4/H8.

CALENDAR INSPECTION. A detailed searching inspection for material degradation that may have occurred during the preceding calendar interval and provide an opportunity to perform essential preventative maintenance. The inspections are programmed in multiple calendar weeks.

CAUTION. Indicates danger to the equipment. The caution precedes the step or item to which it refers.

CDI. Collateral Duty Inspector. A person whose qualified IAW OPNAV 4790.2 Series and function is to inspect critical steps in maintenance of a piece of equipment.

COMPONENT. An item of equipment making up part of an assembly or subassembly.

CONFIGURATION. The makeup, size, shape and relative location of parts of an item of equipment and its accessories. This includes the composition of materials as well as marking details. The configuration of each equipment is specified by government drawings, military specifications and the modification instructions contained in this volume.

D-RING. A metal fitting shaped in the form of the letter “D”, for example, a D-ring on a harness connects to a chest type parachute assembly by means of snap fittings. Also, a slang term for the ripcord handle.

DEBURR. To remove minor irregularities on the surface of machined metals by grinding or filing.

DIA. Abbreviation for diameter.

DOFF. To remove or take off an item of clothing or equipment.

DON. To put on an item of clothing or equipment.

DROPPABLE. A hand launched liferaft assembly.

EQUALIZER TUBE. A small corrugated tube which connects the main upper and lower tubes of the twenty-man liferaft. The equalizer tube allows even distribution of CO_2 to each main tube during inflation. After inflation a clamp should be attached to prevent leakage from one tube to another should one tube develops a leak.

EXTERNAL/WING COMPARTMENT. A compartment for stowing liferafts. Access to the compartment is located on the outside of the fuselage or wing.

EYELET. A small metal reinforcement for a hole in cloth, similar to a grommet, except thinner and smaller, and having no washer. The eyelet is used to reinforce lacing holes in small covers, etc.

FABRICATE. To make up or construct an item of equipment, accessory or material.

FAKE. To fold a line or lanyard in a back and forth fashion.

FLOTATION CELL. The inflatable compartments of a life preserver.

FUNCTIONAL TEST. A test which puts an item to use to determine if it operates correctly.

FUSELAGE INSTALLED LIFERAFT. Refers to liferafts stowed within the passenger/cargo compartment of the aircraft.

GROMMET. A metal eye and washer used to reinforce a hole in material, for example, grommets on container side flaps.

GROSS WEIGHT. The gross weight of a carbon dioxide cylinder includes the weight of the cylinder, the weight of the carbon dioxide contained by the cylinder, and the weight of the inflation valve attached to the cylinder.

GUSSET. A triangular insert, as in a garment for strengthening or enlarging.

HEAVING LINE. A line with a rubber donut attached to one end for casting to survivors during rescue operations.

HEM. A border of cloth article doubled back and stitched down; also, to finish a hem.

HOOK TAPE. See TAPE, HOOK.

HSSP. High Speed Soft Pack.

HYDROSTATIC PRESSURE. Pressure or force per unit area exerted by a motionless liquid against the surface of a container.

HYDROSTATICS. A branch of physics that deals with the characteristics of liquids at rest and with the pressure in a liquid or exerted by a liquid on an immersed body.

HYDROSTATIC TEST. This is a permanent volumetric expansion of multiplace liferaft CO_2 cylinders. This test is conducted hydrostatically every five years at 5/3 the working pressure of the tested cylinder.

IAW. In Accordance With.

IN. Abbreviation for inches.

INFLATION ASSEMBLY. Inflation valve and carbon dioxide cylinder or cartridge assembled as a unit.

KNOT, BINDER. The simplest method of joining two threads or lines. The two ends are placed side by side and a simple, overhand knot is then tied in both lines simultaneously. It will not slip when drawn tightly. Also called a thumb knot.

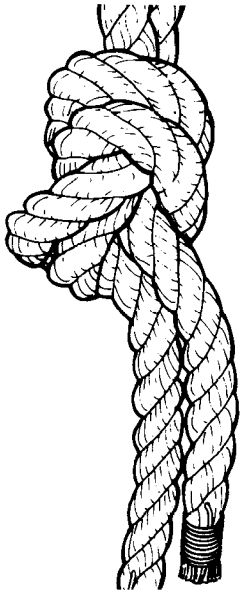

ZZ000002

Binder Knot

KNOT, BOWLINE. A knot formed by making a small overhand loop a desired distance from the end of the line. The end of the line is then passed through the loop from the underside of the main part of the line and back through the small part of the loop. When this knot is drawn tight, it will not slip but still can be easily untied.

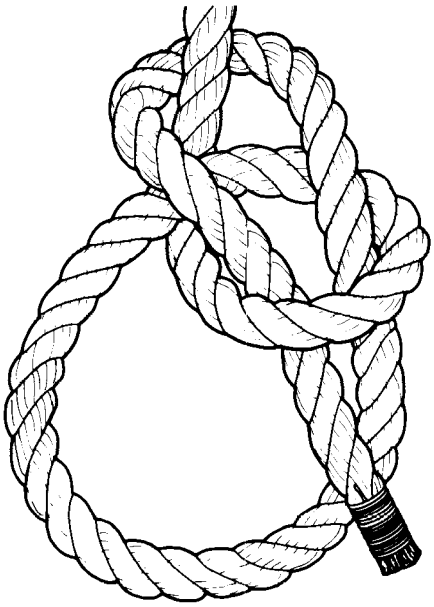

ZZ000003

Bowline Knot

KNOT, CLOVE-HITCH. A knot formed by making one turn around a post, bringing the end across the line, continuing around the post a second time and passing the end under the second loop.

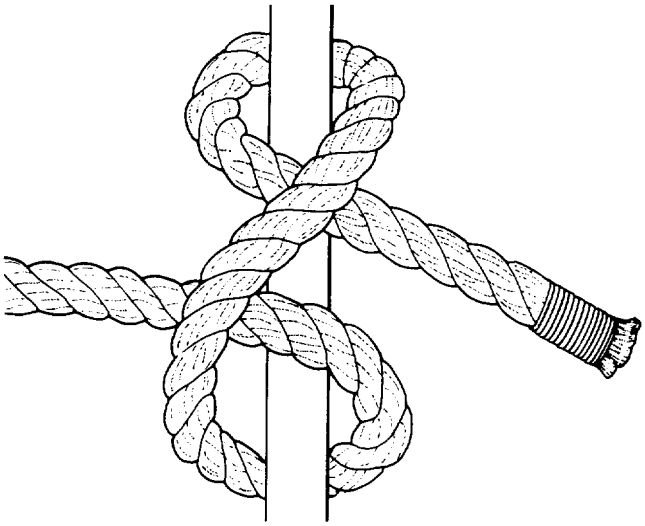

ZZ000004

Clove-Hitch Knot

KNOT, HALF-HITCH. A knot formed by passing a cord or line around an object, then passing the free end around the main part of the cord and bringing the free end up through the loop thus formed. It is used in forming safety ties.

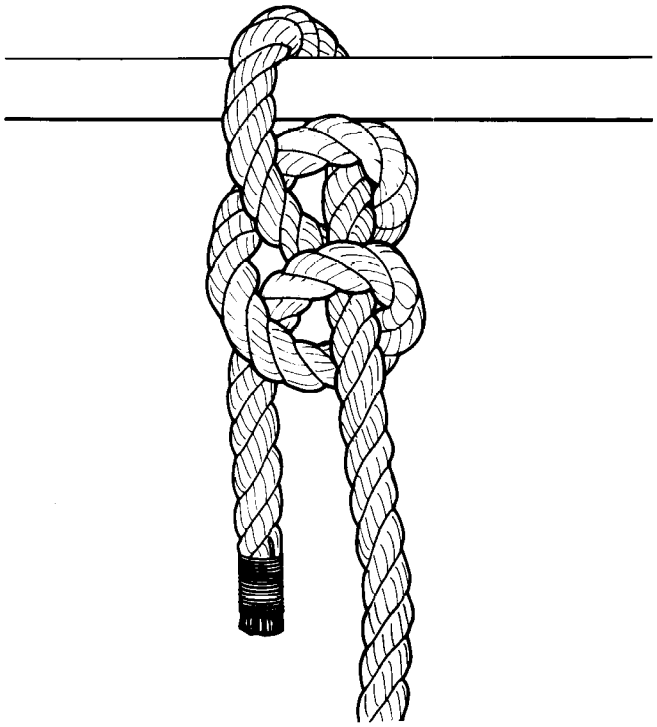

ZZ000005

Half-Hitch Knot

KNOT, LARK'S HEAD. A knot formed around an attachment ring or bar by passing the free ends of the line around the bar or through the ring and then through a loop or bight in the line.

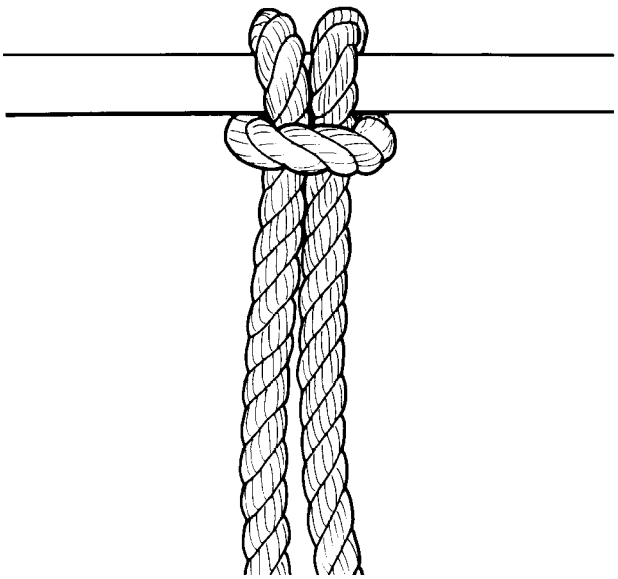

ZZ000006

Lark's Head Knot

KNOT, OVERHAND. A simple knot tied in the end of a line by forming a loop and passing the end over and down through the loop.

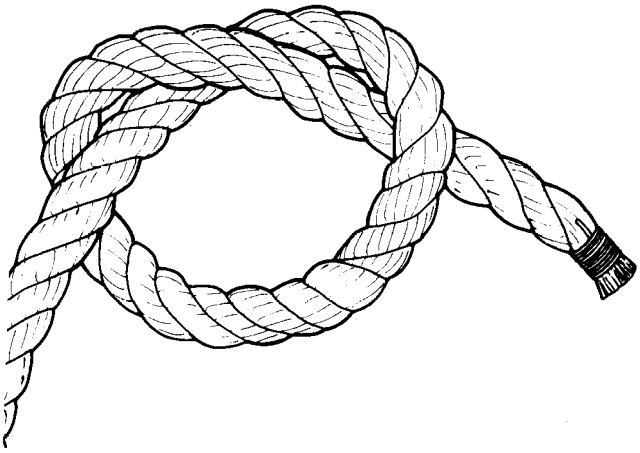

ZZ000007

Overhand Knot

KNOT OVERHAND LOOP. Double the line forming a loop; then tie a simple overhand knot forming as large a loop as desired.

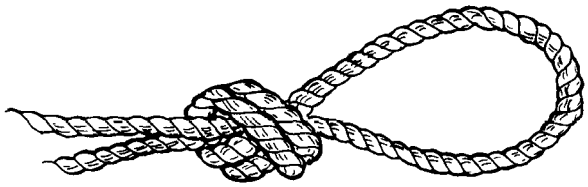

ZZ000008

Overhand Loop Knot

KNOT, SQUARE. A knot formed by passing the end of the cord in the left hand over and under the end in the right hand and then reversing the process by passing the end in the right hand over and under the end in the left hand.

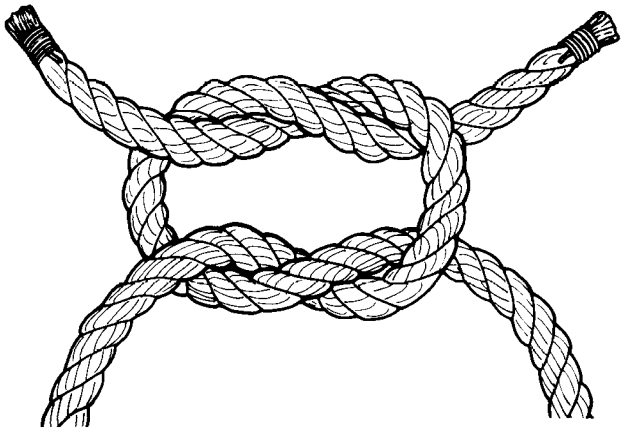

ZZ000009

Square Knot

KNOT, SURGEON's. The surgeon's knot is similar to the square knot, except that the first overhand tie is wrapped twice around the cord or line.

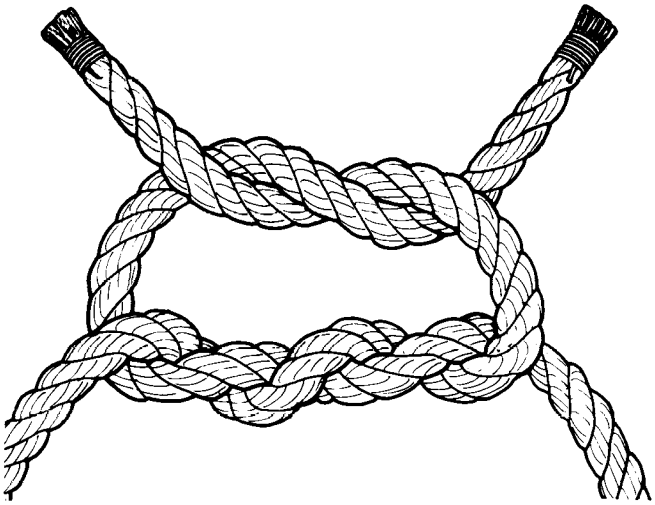

ZZ000010

Surgeon's Knot

KNOT, SURGEON'S/ KNOT, OVERHAND. A combination of two standard knots formed exactly as the name suggests. Form surgeon's knot near end of line then follow with overhand knot in end of line positioned snugly against surgeon's knot to ensure no slippage.

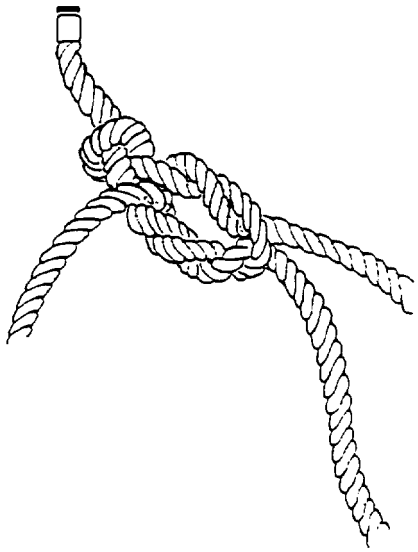

ZZ000011

Surgeon's Knot/Overhand Knot

KNOT, SURGEON'S/KNOT, SQUARE. A combination of two standard knots formed exactly as the name suggests. Form the surgeon's knot first, then form a complete and separate square knot snugly against surgeon's knot.

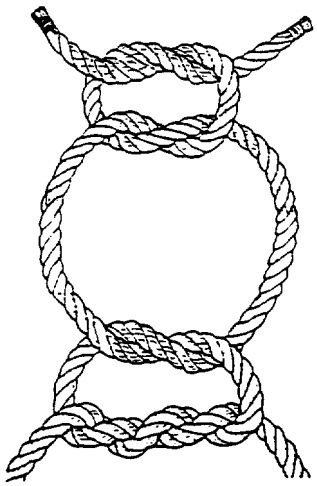

ZZ000012

Surgeon's Knot/Square Knot

LBS. Abbreviation for pounds.

LIFE LINE. A length of 3/4-inch circumference 1500 pound test nylon rope (MIL-R-17343 NIIN 0-618-0261) routed around the gunwale of raft and tied to each patch loop. It is used as a hand hold during rough seas.

LIFE PRESERVER. Basic life preserver without inflation assemblies and survival items.

LIFE PRESERVER ASSEMBLY. Life preserver with inflation assembly.

LIFERAFT. Basic liferaft with accessories attached, but without an inflation assembly, survival items, or cases and containers.

LIFERAFT ASSEMBLY. Liferaft with inflation assembly.

LOBE. An inflation section of a life preserver.

LOCKSTITCH. A common sewing machine stitch formed when the thread in the needle goes through the material and connects with the bobbin thread. The needle and bobbin thread should lock in the center of the material thickness. (Ref. ASTM-D-6193, Type 301).

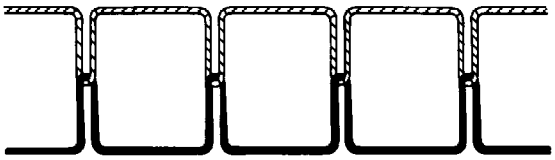

ZZ000013

Lockstitch

LOCKWIRE. A wire that prevents loosening of a securing device.

MIM. Abbreviation for Maintenance Instruction Manual. MIM manuals are NAVAIR 01 series manuals containing maintenance instructions for specific types of aircraft.

MOORING LINE. A line used to hold fast a vessel or aircraft.

MULTIPLACE LIFERAFT. A liferaft capable of accommodating more than one person.

NA. Not Applicable.

NADC. Naval Air Development Center.

NATOPS. Naval Air Training and Operating Procedures Standardization.

NATRA. Naval Air Training Command.

Deleted

NAVAIR. Naval Air Systems Command, Headquarters.

NAVAIRSYSCOM. Naval Air Systems Command.

NFO. Naval Flight Officer.

NIIN. National Item Identification Number.

NOTE. An information item. A note may precede or follow the item or step to which it refers.

ORAL INFLATION ASSEMBLY. Oral inflation valve and tube assembled as a unit.

PACKAGED LIFERAFT ASSEMBLY. Liferaft assembled, packed and ready for use. Packaged liferaft assembly includes liferaft, inflation assembly, accessories, survival items, and one or more containers, all enclosed in an outer container or carrying case.

PAINTER, COTTON CORD. A 60-foot length of cotton cord (T-C-571, Type I, Size 4, NIIN 00-233-6555 or 00-270-5468) with a 50 to 150 pound static breaking strength. The painter line retains deployed liferafts to the aircraft during emergency egress but will easily break if the aircraft sinks.

PERIODIC MAINTENANCE REQUIREMENTS MANUAL (PMRM). Provides general and specific instructions to perform scheduled maintenance at the organizational and intermediate levels. These requirements are performed at specific intervals that are normally based upon calendar time, flight hours, operating hours, or other events that affect equipment performance. The PMRM consists of Maintenance Requirement Cards (MRC's)

PHASED INSPECTION. A division of the total scheduled maintenance requirements into small packages (phases) of approximately the same work content, that are accomplished sequentially at specific intervals.

PILE TAPE. See TAPE, PILE

PMS. Planned Maintenance System.

PREFLIGHT INSPECTION. An inspection conducted prior to each flight to ensure the equipment is safe for use and to verify proper servicing.

PSIG. Abbreviation for pounds per square inch as measured with a device calibrated to discount the pressure of the earth's atmosphere.

PURGE. To remove undesirable particles or substances from a container by the high velocity injection of a gas or liquid, usually in short bursts.

QUALIFIED PERSONNEL. Graduates of the Navy Aircrew Survival Equipmentman School.

R. Abbreviation for radius.

REF. Abbreviation for reference.

REMOTE INFLATION. That assembly which uses cables and lanyards to actuate the inflation valve.

RETAINING LINE. A length of 1-inch nylon webbing (MIL-T-5038, Type III; NIIN 00-176-8085). The loop end is attached to the liferaft inflation valve and the snaphook end is attached to the aircrewman. It is used to secure liferaft to aircrewman and to provide a rapid means of locating inflation valve.

REEVE. To pass a rope or webbing through a loop, grommet or other opening of a component, often in a prescribed direction or manner.

RIGHT. To restore to an upright position.

RIGHTING LINE. A length of 1/4-inch diameter 1500 pound test nylon rope (MIL-R-17343; NIIN 00-618-0261) used to right an overturned liferaft. It is tied to the liferaft lifeline opposite carbon dioxide cylinder.

SAFETY TIE. Low strength thread which serves to inhibit accidental opening, discharge or separation.

SAR. Search and Rescue.

SCRAP. To discard items, parts or materials which are obsolete or no longer usable.

SDLM. Standard Depot Level Maintenance. Provides for a comprehensive inspection of selected aircraft structures and materials, critical defect correction, preventative maintenance as required, modification and technical directive compliance to insure reliability and operational availability of the aircraft at minimum cost for the established operating service period, and to provide intermediate support during the total service life.

SEA ANCHOR. A drag, usually a nylon-covered conical frame, floating behind a vessel to prevent drifting or to maintain a heading into the wind.

SEAR. To melt and fuse the ends or edges of material, such as nylon cord or webbing, with heat.

SM&R CODES. Source, Maintenance and Recoverability Codes.

SPECIAL INSPECTION. A scheduled inspection with a prescribed interval other than daily, calendar, phased or Standard Depot Level Maintenance (SDLM).

STOWING. The act of putting away in a neat, orderly fashion.

SUPPLY LINE. A 5-foot length of Type III nylon cord (MIL-C-5040; NIIN 00-240-2146) which secures the raft supply and bailer pockets to liferaft.

SURVIVAL ITEM. An item used to protect or sustain life, or to provide a means of signaling for help, for example, food packets and survival radios are survival items.

TAPE, HOOK. Strip of nylon tape with small nylon hooks on one side. Hook tape is used together with pile tape as a fastener.

TAPE, PILE. Strip of nylon tape with small nylon loops on one side. Used with hook tape as a fastener.

TARE WEIGHT. The weight of an empty container; for example, the tare weight of a carbon dioxide cylinder includes the weight of the empty cylinder and the weight of the inflation valve.

TURNAROUND INSPECTION. This inspection is conducted between usage to ensure the integrity, verify proper servicing, and to detect degradation that may have occurred during previous use.

TYP. Abbreviation for typical.

WARNING. Indicates danger to personnel. A warning precedes the item or step to which it refers.

WHIPSTITCH. A stitch used to join two pieces of webbing and to reinforce weak seams.

X. Abbreviation for times or by.

THIS PAGE INTENTIONALLY LEFT BLANK.

ALPHABETICAL INDEX

Subject — Paragraph, Figure, Table Number

A

Accident Evaluation 2-6A
Allowance Listing of Inflatable Survival Equipment 1-17
Application
LPP-1 and -1A Life Preserver Assembly 20-9
LPU-21/P Series Life Preserver Assembly 14-14
LPU-21C(V)1/P Life Preserver Assembly 26-15
LPU-21D/P Life Preserver Assembly 15-15
LPU-23/P Series Life Preserver Assembly 16-12
LPU-23B(V)1/P Life Preserver Assembly 27-13
LPU-23C/P Life Preserver Assembly 18-13
LPU-27/P 22P-7(V) Life Preserver Assembly 17-14
LPU-28/P Life Preserver Assembly 24-7
LPU-32/P Life Preserver Assembly 25-9, F25-1
LPU-34/P Low Profile Floatation Collar Life Preserver 5-6, F5-1
LPU-35/P Life Preserver Assembly 15-15, F15-2
LPU-36/P Life Preserver, Low-Profile Floatation Collar 6-7
LPU-37/P Low Profile Floatation Collar Life Preserver 8-6, F8-1
LSC P/N 482 Life Preserver Assembly 24-7
Pouch Type Life Preserver Assembly 23-8

B

Barometric Pressure Conversion Chart
LPP-1 and -1A Life Preserver Assembly T20-6
LPU-21/P Series Life Preserver Assembly T14-6
LPU-21C(V)1/P Life Preserver Assembly T26-5
LPU-21D/P Life Preserver Assembly T15-5
LPU-23/P Series Life Preserver Assembly T16-6
LPU-23B(V)1/P Life Preserver Assembly T27-5
LPU-23C/P Life Preserver Assembly T18-5
LPU-27/P 22P-7(V) Life Preserver Assembly T17-5
LPU-28/P Life Preserver Assembly T24-6
LPU-31/P Life Preserver Assembly T22-4
LPU-32/P Life Preserver Assembly T25-5
LPU-34/P Low Profile Floatation Collar Life Preserver T5-4
LPU-35/P Life Preserver Assembly T15-5
LPU-36/P Life Preserver, Low-Profile Floatation Collar T6-4
LPU-37/P Low Profile Floatation Collar Life Preserver T8-4
LSC P/N 482 Life Preserver Assembly T24-6
Pouch Type Life Preserver Assembly T23-5

ALPHABETICAL INDEX (Cont)

Subject	Paragraph, Figure, Table Number
C	
Cementing	
LPP-1 and -1A Life Preserver Assembly	20-52
LPU-21/P Series Life Preserver Assembly	14-59
LPU-21C(V)1/P Life Preserver Assembly	26-62
LPU-21D/P Life Preserver Assembly	15-63
LPU-23/P Series Life Preserver Assembly	16-62
LPU-23B(V)1/P Life Preserver Assembly	27-64
LPU-23C/P Life Preserver Assembly	18-63
LPU-27/P22P-7(V) Life Preserver Assembly	17-59
LPU-28/P Life Preserver Assembly	24-52
LPU-31/P Life Preserver Assembly	22-49
LPU-32/P Life Preserver Assembly	25-54
LPU-35/P Life Preserver Assembly	15-63
Pouch Type Life Preserver Assembly	23-52
Cleaning and Servicing	
LPP-1 and -1A Life Preserver Assembly	20-43
LPU-21/P Series Life Preserver Assembly	14-48
LPU-21C(V)1/P Life Preserver Assembly	26-50
LPU-21D/P Life Preserver Assembly	15-51
LPU-23/P Series Life Preserver Assembly	16-49
LPU-23B(V)1/P Life Preserver Assembly	27-51
LPU-23C/P Life Preserver Assembly	18-51
LPU-27/P22P-7(V) Life Preserver Assembly	17-47
LPU-28/P Life Preserver Assembly	24-40
LPU-31/P Life Preserver Assembly	22-38
LPU-32/P Life Preserver Assembly	25-43
LPU-34/P Low Profile Floatation Collar Life Preserver	5-39
LPU-35/P Life Preserver Assembly	15-51
LPU-36/P Life Preserver, Low-Profile Floatation Collar	6-52
LPU-37/P Low Profile Floatation Collar Life Preserver	8-41
LSC P/N 482 Life Preserver Assembly	24-40
Pouch Type Life Preserver Assembly	23-42
Common Repairs and Fabrications Table	
LPP-1 and -1A Life Preserver Assembly	T20-2
LPU-21/P Series Life Preserver Assembly	T14-3
LPU-21C(V)1/P Life Preserver Assembly	T26-2
LPU-21D/P Life Preserver Assembly	T15-6
LPU-23/P Series Life Preserver Assembly	T16-3
LPU-23B(V)1/P Life Preserver Assembly	T27-2
LPU-23C/P Life Preserver Assembly	T18-2
LPU-27/P22P-7(V) Life Preserver Assembly	T17-2
LPU-28/P Life Preserver Assembly	T24-3
LPU-31/P Life Preserver Assembly	T22-1
LPU-32/P Life Preserver Assembly	T25-2
LPU-34/P Low Profile Floatation Collar Life Preserver	T5-2
LPU-35/P Life Preserver Assembly	T15-6
LPU-37/P Low Profile Floatation Collar Life Preserver	T8-2
Pouch Type Life Preserver Assembly	T23-2

ALPHABETICAL INDEX (Cont)

Subject — Paragraph, Figure, Table Number

C (Cont)

Configuration
- LPP-1 and -1A Life Preserver Assembly . . . 20-3
- LPU-21/P Series Life Preserver Assembly . . . 14-5
- LPU-21C(V)1/P Life Preserver Assembly . . . 26-3
- LPU-21D/P Life Preserver Assembly . . . 15-3
- LPU-23/P Series Life Preserver Assembly . . . 16-4
- LPU-23B(V)1/P Life Preserver Assembly . . . 27-4
- LPU-23C/P Life Preserver Assembly . . . 18-4
- LPU-27/P22P-7(V) Life Preserver Assembly . . . 17-5
- LPU-28/P Life Preserver Assembly . . . 24-3
- LPU-31/P Life Preserver Assembly . . . 22-3
- LPU-32/P Life Preserver Assembly . . . F25-1, 25-3
- LPU-34/P Life Preserver Assembly . . . F5-1, 5-3
- LPU-35/P Life Preserver Assembly . . . 15-3
- LPU-36/P Life Preserver, Low-Profile Floatation Collar . . . 6-4
- LPU-37/P Life Preserver Assembly . . . F8-1, 8-3
- LSC P/N 482 Life Preserver Assembly . . . 24-3
- Pouch Type Life Preserver Assembly . . . 23-3

Conflicts and Supersedures . . . 1-8
Contents . . . 1-7

D

Decontamination, Saltwater
- LPU-28/P Life Preserver Assembly (Soniform Model P/N SF8580) . . . 24-43
- LPU-34/P Life Preserver Assembly . . . 5-41
- LPU-37/P Life Preserver Assembly . . . 8-43
- LSC P/N 482 Life Preserver Assembly . . . 24-43A

Definitions . . . 1-23
Deflation
- LPP-1 and -1A Life Preserver Assembly . . . 20-31
- LPU-21/P Series Life Preserver Assembly . . . 14-35
- LPU-21C(V)1/P Life Preserver Assembly . . . 26-38
- LPU-21D/P Life Preserver Assembly . . . 15-38
- LPU-23/P Series Life Preserver Assembly . . . 16-34
- LPU-23B(V)1/P Life Preserver Assembly . . . 27-37
- LPU-23C/P Life Preserver Assembly . . . 18-37
- LPU-27/P22P-7(V) Life Preserver Assembly . . . 17-35
- LPU-28/P Life Preserver Assembly . . . 24-29
- LPU-31/P Life Preserver Assembly . . . 22-27
- LPU-32/P Life Preserver Assembly . . . 25-31
- LPU-34/P Life Preserver Assembly . . . 5-35
- LPU-36/P Life Preserver, Low-Profile Floatation Collar . . . 6-47
- LPU-37/P Life Preserver Assembly . . . 8-37
- LSC P/N 482 Life Preserver Assembly . . . 24-29
- P/N 487VB TRI-SAR Harness Assembly Floatation Vest . . . 7-12
- Pouch Type Life Preserver Assembly . . . 23-30

Description of NAVAIR 13-1-6.1-2 . . . 1-6

ALPHABETICAL INDEX (Cont)

Subject — Paragraph, Figure, Table Number

D (Cont)

Determination of Repairability
- LPP-1 and -1A Life Preserver Assembly 20-51
- LPU-21/P Series Life Preserver Assembly 14-56
- LPU-21C(V)1/P Life Preserver Assembly 26-58
- LPU-21D/P Life Preserver Assembly 15-59
- LPU-23/P Series Life Preserver Assembly 16-58
- LPU-23B(V)1/P Life Preserver Assembly 27-60
- LPU-23C/P Life Preserver Assembly 18-60
- LPU-27/P22P-7(V) Life Preserver Assembly 17-55
- LPU-28/P Life Preserver Assembly 24-49
- LPU-31/P Life Preserver Assembly 22-46
- LPU-32/P Life Preserver Assembly 25-50
- LPU-35/P Life Preserver Assembly 15-69
- Pouch Type Life Preserver Assembly 23-50

Directives
- LPU-21/P Series Life Preserver Assembly T14-2
- LPU-21D/P Series Life Preserver Assembly T15-2
- LPU-23/P Series Life Preserver Assembly T16-2
- LPU-28/P Life Preserver Assembly T24-2
- LPU-34/P Life Preserver Assembly T5-1
- LPU-37/P Life Preserver Assembly T8-1

Disassembly
- LPU-21/P Series Life Preserver Assembly 14-68
- LPU-21C(V)1/P Life Preserver Assembly 26-70
- LPU-21D/P Life Preserver Assembly 15-71
- LPU-23/P Series Life Preserver Assembly 16-72
- LPU-23B(V)1/P Life Preserver Assembly 27-73
- LPU-23C/P Life Preserver Assembly 18-74
- LPU-27/P22P-7(V) Life Preserver Assembly 17-68
- LPU-28/P Life Preserver Assembly 24-60
- LPU-32/P Life Preserver Assembly 25-59
- LPU-35/P Life Preserver Assembly 15-71

Donning Procedure
- LPP-1 and -1A Life Preserver Assembly 20-13
- LPU-28/P Life Preserver Assembly 24-11
- LPU-31/P Life Preserver Assembly 22-9
- LPU-32/P Life Preserver Assembly 25-13
- LSC P/N 482 Life Preserver Assembly 24-11
- Pouch Type Life Preserver Assembly 23-12

Drawings, Engineering 1-14

E

ALPHABETICAL INDEX (Cont)

Subject — Paragraph, Figure, Table Number

F

Fabrication
- AN/PRC-125 Radio Stowage Assembly 24-64
- Casing Webbing Belt Extension Panel
  - LPU-27/P22P-7(V) Life Preserver Assembly 17-77, F17-12
  - LPU-35/P Life Preserver Assembly 15-82A, F15-13A, F15-13B
- Collar Lobe Webbing Loops
  - LPU-21/P Series Life Preserver Assembly 14-75, F14-9
  - LPU-21C(V)1/P Life Preserver Assembly 26-77, F26-9
  - LPU-21D/P Life Preserver Assembly 15-78, F15-9
  - LPU-23/P Series Life Preserver Assembly 16-81, F16-15
  - LPU-23B(V)1/P Life Preserver Assembly 27-82, F27-15
  - LPU-23C/P Life Preserver Assembly 18-83, F18-15
  - LPU-27/P22P-7(V) Life Preserver Assembly 17-75, F17-9
- Extension Belt Assembly
  - LPU-32/P Lift Preserver Assembly 25-65A
- Hoisting Strap
  - Pouch Type Life Preserver Assembly 23-61
- Locking Pin Cover (Life Preservers without No. 3 spur grommet) and Installation
  - LPU-21/P Series Life Preserver Assembly 14-76, F14-10, F14-11
  - LPU-21C(V)1/P Life Preserver Assembly 26-78, F26-10, F26-11
  - LPU-21D/P Life Preserver Assembly 15-82, F15-12, F15-13
  - LPU-23/P Series Life Preserver Assembly 16-82, F16-16, F16-17
  - LPU-23B(V)1/P Life Preserver Assembly 27-83, F27-16, F27-17
  - LPU-23C/P Life Preserver Assembly 18-87, F18-18, F18-19
  - LPU-27/P22P-7(V) Life Preserver Assembly 17-76, F17-10, F17-11
- LPU-21C(V)1/P Life Preserver Assembly (LPU-21C/P Floatation Assembly Into LPU-21D/P Casing) 26-80
- LPU-23B(V)1/P Life Preserver Assembly (LPU-23/P Floatation Assembly Into LPU-23C/P Casing) 27-85
- Protective Cover Assembly
  - LPU-21/P Series Life Preserver Assembly 14-74
  - LPU-21C(V)1/P Life Preserver Assembly 26-76
  - LPU-21D/P Life Preserver Assembly 15-77
  - LPU-23/P Series Life Preserver Assembly 16-80
  - LPU-23B(V)1/P Life Preserver Assembly 27-81
  - LPU-23C/P Life Preserver Assembly 18-82
  - LPU-27/P22P-7(V) Life Preserver Assembly 17-74
  - LPU-32/P Life Preserver Assembly 25-65
- Slip-On Pockets for Life Preserver Hardware
  - LPU-21/P Series Life Preserver Assembly 14-64
  - LPU-21C(V)1/P Life Preserver Assembly 26-67
  - LPU-21D/P Life Preserver Assembly 15-68
  - LPU-23/P Series Life Preserver Assembly 16-68
  - LPU-23B(V)1/P Life Preserver Assembly 27-70
  - LPU-23C/P Life Preserver Assembly 18-70
  - LPU-27/P22P-7(V) Life Preserver Assembly 17-64

ALPHABETICAL INDEX (Cont)

Subject — Paragraph, Figure, Table Number

F (Cont)

Fabrication (Cont)
- Survivor Locator Light Attachment Pocket
  - LPP-1 and -1A Life Preserver Assembly 20-60, F20-6
- Waist Lobe Attachment Patch, and Installation
  - LPU-21C(V)1/P Life Preserver Assembly 26-81, F26-13, F26-14
  - LPU-21D/P Life Preserver Assembly 15-79, F15-10
  - LPU-23B(V)1/P Life Preserver Assembly 27-86, F27-19, F27-20
  - LPU-23C/P Life Preserver Assembly 18-84, F18-16, F18-17

FLU-8A/P and FLU-8B/P Automatic Inflator Assemblies
- Battery Arrangement
  - LPU-23/P Series Life Preserver Assembly F16-9
  - LPU-23B(V)1/P Life Preserver Assembly F27-9
  - LPU-23C/P Life Preserver Assembly F18-9
- Battery Date of Manufacture Codes
  - LPU-23/P Series Life Preserver Assembly 16-39
  - LPU-23B(V)1/P Life Preserver Assembly 27-41
  - LPU-23C/P Life Preserver Assembly 18-41
- Battery Replacement
  - LPU-23/P Series Life Preserver Assembly 16-54, F16-9
  - LPU-23B(V)1/P Life Preserver Assembly 27-56, F27-9
  - LPU-23C/P Life Preserver Assembly 18-56, F18-9
- Battery Visual Inspection
  - LPU-23/P Series Life Preserver Assembly 16-39, F16-4
  - LPU-23B(V)1/P Life Preserver Assembly 27-41, F27-5
  - LPU-23C/P Life Preserver Assembly 18-41, F18-5
- Battery Voltage Testing
  - LPU-23/P Series Life Preserver Assembly 16-40
  - LPU-23B(V)1/P Life Preserver Assembly 27-42
  - LPU-23C/P Life Preserver Assembly 18-42
- Inflator Lot Numbering System
  - LPU-23/P Series Life Preserver Assembly F16-3
  - LPU-23B(V)1/P Life Preserver Assembly F27-4
  - LPU-23C/P Life Preserver Assembly F18-4
- Packaging Cord Replacement
  - LPU-23/P Series Life Preserver Assembly 16-76, F16-13
  - LPU-23B(V)1/P Life Preserver Assembly 27-77, F27-13
  - LPU-23C/P Life Preserver Assembly 18-78, F18-13
- Replacement of Automatic Inflator Assembly
  - LPU-23/P Series Life Preserver Assembly 16-75
  - LPU-23B(V)1/P Life Preserver Assembly 27-76
  - LPU-23C/P Life Preserver Assembly 18-77
  - LPU-36/P Life Preserver, Low-Profile Floatation Collar 6-38
- Routing of Packaging Cord
  - LPU-23/P Series Life Preserver Assembly F16-13
  - LPU-23B(V)1/P Life Preserver Assembly F27-13
  - LPU-23C/P Life Preserver Assembly F18-13

ALPHABETICAL INDEX (Cont)

Subject — Paragraph, Figure, Table Number

F (Cont)

FLU-8A/P and FLU-8B/P Automatic Inflator Assemblies (Cont)
Sensor Plug Cap Assembly Replacement
LPU-23/P Series Life Preserver Assembly 16-77, F16-14
LPU-23B(V)1/P Life Preserver Assembly 27-78, F27-14
LPU-23C/P Life Preserver Assembly 18-79, F18-14
Function
LPP-1 and -1A Life Preserver Assembly 20-11
LPU-21/P Series Life Preserver Assembly 14-16
LPU-21C(V)1/P Life Preserver Assembly 26-17
LPU-21D/P Life Preserver Assembly 15-17
LPU-23/P Series Life Preserver Assembly 16-14
LPU-23B(V)1/P Life Preserver Assembly 27-15
LPU-23C/P Life Preserver Assembly 18-15
LPU-27/P22P-7(V) Life Preserver Assembly 17-16
LPU-28/P Life Preserver Assembly 24-9
LPU-31/P Life Preserver Assembly 22-7
LPU-32/P Life Preserver Assembly 25-11
LPU-34/P Life Preserver Assembly 5-8
LPU-35/P Life Preserver Assembly 15-17
LPU-36/P Life Preserver, Low-Profile Floatation Collar 6-9
LPU-37/P Life Preserver Assembly 8-8
LSC P/N 482 Life Preserver Assembly 24-9
Pouch Type Life Preserver Assembly 23-10

G

H

I

Illustrated Parts Breakdown
Documents, Inflatable Survival Equipment Maintenance 2-10
Life Preserver Special Tools and Support Equipment 3-7, F3-3
LPP-1 and -1A Life Preserver Assembly 20-68, F20-8
LPU-21/P Series Life Preserver Assembly 14-81, F14-13
LPU-21C(V)1/P Life Preserver Assembly 26-87, F26-18
LPU-21D/P Life Preserver Assembly 15-87, F15-18
LPU-23/P Series Life Preserver Assembly 16-87, F16-19
LPU-23B(V)1/P Life Preserver Assembly 27-93, F27-23
LPU-23C/P Life Preserver Assembly 18-92, F18-22
LPU-27/P22P-7(V) Life Preserver Assembly 17-81, F17-14
LPU-28/P Life Preserver Assembly 24-67, F24-8
LPU-31/P Life Preserver Assembly 22-65, F22-12
LPU-32/P Life Preserver Assembly 25-69, F25-7
LPU-34/P Life Preserver Assembly 5-42, F5-8
LPU-35/P Life Preserver Assembly 15-87, F15-18
LPU-36/P Life Preserver, Low-Profile Floatation Collar 6-54, F6-9
LPU-37/P Life Preserver Assembly 8-44, F8-6

ALPHABETICAL INDEX (Cont)

Subject — Paragraph, Figure, Table Number

I (Cont)

Inspection
- Acceptance/Phase
  - LPP-1 and -1A Life Preserver Assembly . . . 20-27
  - LPU-21/P Series Life Preserver Assembly . . . 14-31
  - LPU-21C(V)1/P Life Preserver Assembly . . . 26-34
  - LPU-21D/P Life Preserver Assembly . . . 15-34
  - LPU-23/P Series Life Preserver Assembly . . . 16-30
  - LPU-23B(V)1/P Life Preserver Assembly . . . 27-33
  - LPU-23C/P Life Preserver Assembly . . . 18-33
  - LPU-27/P 22P-7(V)1 Life Preserver Assembly . . . 17-31
  - LPU-28/P Life Preserver Assembly . . . 24-25
  - LPU-31/P Life Preserver Assembly . . . 22-23
  - LPU-32/P Life Preserver Assembly . . . 25-27
  - LPU-34/P Life Preserver Assembly . . . 5-23
  - LPU-35/P Life Preserver Assembly . . . 15-34
  - LPU-37/P Life Preserver Assembly . . . 8-23
  - LSCP/N-482 Life Preserver Assembly . . . 24-25
  - Pouch Type Life Preserver Assembly . . . 23-26
- Aircraft Accident Report . . . 2-5A
- Beaded Inflation Handle Inspection
  - LPU-21/P Series Life Preserver Assembly . . . 14-32
  - LPU-21C(V)1/P Life Preserver Assembly . . . 26-35
  - LPU-21D/P Life Preserver Assembly . . . 15-35
  - LPU-23/P Series Life Preserver Assembly . . . 16-31
  - LPU-23B(V)1/P Life Preserver Assembly . . . 27-34
  - LPU-23C/P Life Preserver Assembly . . . 18-34
  - LPU-27/P 22P-7(V)1 Life Preserver Assembly . . . 17-32
  - LPU-32/P Life Preserver Assembly . . . 25-28
  - LPU-35/P Life Preserver Assembly . . . 15-35
- Case, Container/Pouch, Cover
  - LPP-1 and -1A Life Preserver Assembly . . . 20-29
  - LPU-21/P Series Life Preserver Assembly . . . 14-33
  - LPU-21C(V)1/P Life Preserver Assembly . . . 26-36
  - LPU-21D/P Life Preserver Assembly . . . 15-36
  - LPU-23/P Series Life Preserver Assembly . . . 16-32
  - LPU-23B(V)1/P Life Preserver Assembly . . . 27-35
  - LPU-23C/P Life Preserver Assembly . . . 18-35
  - LPU-27/P 22P-7(V)1 Life Preserver Assembly . . . 17-33
  - LPU-28/P Life Preserver Assembly . . . 24-27
  - LPU-31/P Life Preserver Assembly . . . 22-25
  - LPU-32/P Life Preserver Assembly . . . 25-29
  - LPU-34/P Life Preserver Assembly . . . 5-25
  - LPU-35/P Life Preserver Assembly . . . 15-36
  - LPU-37/P Life Preserver Assembly . . . 8-25
  - LSCP/N-482 Life Preserver Assembly . . . 24-27
  - Pouch Type Life Preserver Assembly . . . 23-28

ALPHABETICAL INDEX (Cont)

Subject — Paragraph, Figure, Table Number

I (Cont)

Inspection (Cont)
- General
  - LPP-1 and -1A Life Preserver Assembly 20-19
  - LPU-21/P Series Life Preserver Assembly 14-23
  - LPU-21C(V)1/P Life Preserver Assembly 26-26
  - LPU-21D/P Life Preserver Assembly 15-26
  - LPU-23/P Series Life Preserver Assembly 16-22
  - LPU-23B(V)1/P Life Preserver Assembly 27-25
  - LPU-23C/P Life Preserver Assembly 18-25
  - LPU-27/P22P-7(V) Life Preserver Assembly 17-23
  - LPU-28/P Life Preserver Assembly 24-17
  - LPU-31/P Life Preserver Assembly 22-15
  - LPU-32/P Life Preserver Assembly 25-19
  - LPU-34/P Life Preserver Assembly 5-15
  - LPU-35/P Life Preserver Assembly 15-26
  - LPU-36/P Life Preserver, Low-Profile Floatation Collar 6-19
  - LPU-37/P Life Preserver Assembly 8-15
  - LSC P/N 482 Life Preserver Assembly 24-17
  - P/N 487VB TRI-SAR Harness Assembly Floatation Vest 7-5
  - Pouch Type Life Preserver Assembly 23-18
- Inflation Assembly (CO_2)
  - LPP-1 and -1A Life Preserver Assembly 20-37, F20-7
  - LPU-21/P Series Life Preserver Assembly 14-42, F14-8
  - LPU-21C(V)1/P Life Preserver Assembly 26-44, F26-8
  - LPU-21D/P Life Preserver Assembly 15-45, F15-8
  - LPU-23/P Series Life Preserver Assembly 16-43
  - LPU-23B(V)1/P Life Preserver Assembly 27-45
  - LPU-23C/P Life Preserver Assembly 18-45
  - LPU-27/P22P-7(V) Life Preserver Assembly 17-41, F17-8
  - LPU-28/P Life Preserver Assembly 24-34, F24-5
  - LPU-31/P Life Preserver Assembly 22-32, F22-6
  - LPU-32/P Life Preserver Assembly 25-37
  - LPU-34/P Life Preserver Assembly 5-28
  - LPU-35/P Life Preserver Assembly 15-45
  - LPU-37/P Life Preserver Assembly 8-28
  - LSC P/N 482 Life Preserver Assembly 24-34, F24-5
  - Pouch Type Life Preserver Assembly 23-36, F23-6
- Inflation Lanyard Inspection
  - LPP-1 and -1A Life Preserver Assembly 20-38
  - LPU-28/P Life Preserver Assembly 24-35
  - LPU-31/P Life Preserver Assembly 22-33
  - LSC P/N 482 Life Preserver Assembly 24-35
  - Pouch Type Life Preserver Assembly 23-37

ALPHABETICAL INDEX (Cont)

Subject — Paragraph, Figure, Table Number

I (Cont)

Inspection (Cont)
- Markings Inspection
  - LPP-1 and -1A Life Preserver Assembly . . . 20-35
  - LPU-21/P Series Life Preserver Assembly . . . 14-40
  - LPU-21C(V)1/P Life Preserver Assembly . . . 26-42
  - LPU-21D/P Life Preserver Assembly . . . 15-43
  - LPU-23/P Series Life Preserver Assembly . . . 16-41
  - LPU-23B(V)1/P Life Preserver Assembly . . . 27-43
  - LPU-23C/P Life Preserver Assembly . . . 18-43
  - LPU-27/P 22P-7(V) Life Preserver Assembly . . . 17-39
  - LPU-28/P Life Preserver Assembly . . . 24-33
  - LPU-31/P Life Preserver Assembly . . . 22-31
  - LPU-32/P Life Preserver Assembly . . . 25-35
  - LPU-34/P Life Preserver Assembly . . . 5-26
  - LPU-35/P Life Preserver Assembly . . . 15-43
  - LPU-36/P Life Preserver Assembly . . . 6-30
  - LPU-37/P Life Preserver Assembly . . . 8-26
  - LSC P/N 482 Life Preserver Assembly . . . 24-33
  - Pouch Type Life Preserver Assembly . . . 23-34
- Place-In-Service
  - LPU-36/P Life Preserver, Low-Profile Floatation Collar . . . 6-25
  - P/N 487VB TRI-SAR Harness Assembly Floatation Vest . . . 7-7
- Postflight
  - LPU-34/P Life Preserver Assembly . . . 5-21
  - LPU-36/P Life Preserver Assembly . . . 6-26
- Preflight/Special
  - LPP-1 and -1A Life Preserver Assembly . . . 20-26
  - LPU-21/P Series Life Preserver Assembly . . . 14-30
  - LPU-21C(V)1/P Life Preserver Assembly . . . 26-33
  - LPU-21D/P Life Preserver Assembly . . . 15-33
  - LPU-23/P Series Life Preserver Assembly . . . 16-29
  - LPU-23B(V)1/P Life Preserver Assembly . . . 27-32
  - LPU-23C/P Life Preserver Assembly . . . 18-32
  - LPU-27/P 22P-7(V) Life Preserver Assembly . . . 17-30
  - LPU-28/P Life Preserver Assembly . . . 24-24
  - LPU-31/P Life Preserver Assembly . . . 22-22
  - LPU-32/P Life Preserver Assembly . . . 25-26
  - LPU-34/P Life Preserver Assembly . . . 5-21
  - LPU-35/P Life Preserver Assembly . . . 15-33
  - LPU-36/P Life Preserver, Low-Profile Floatation Collar . . . 6-26
  - LPU-37/P Life Preserver Assembly . . . 8-21
  - LSC P/N 482 Life Preserver Assembly . . . 24-24
  - P/N 487VB TRI-SAR Harness Assembly Floatation Vest . . . 7-8
  - Pouch Type Life Preserver Assembly . . . 23-25
- Special, 360-Day
  - LPU-34/P Life Preserver Assembly . . . 5-22
  - LPU-36/P Life Preserver, Low-Profile Floatation Collar . . . 6-27
  - LPU-37/P Life Preserver Assembly . . . 8-22
- Special, 90-Day
  - P/N 487VB TRI-SAR Harness Assembly Floatation Vest . . . 7-9

ALPHABETICAL INDEX (Cont)

Subject — Paragraph, Figure, Table Number

I (Cont)

Inspection (Cont)
- Survival Items Inspection
  - LPP-1 and -1A Life Preserver Assembly 20-36, T20-1
  - LPU-21/P Series Life Preserver Assembly 14-41, T14-1
  - LPU-21C(V)1/P Life Preserver Assembly 26-43, T26-1
  - LPU-21D/P Life Preserver Assembly 15-44, T15-1
  - LPU-23/P Series Life Preserver Assembly 16-42, T16-1
  - LPU-23B(V)1/P Life Preserver Assembly 27-44, T27-1
  - LPU-23C/P Life Preserver Assembly 18-44, T18-1
  - LPU-27/P22P-7(V) Life Preserver Assembly 17-40, T17-1
  - LPU-32/P Life Preserver Assembly 25-36
  - LPU-35/P Life Preserver Assembly 15-44
  - Pouch Type Life Preserver Assembly 23-35, T23-1
- Visual Inspection
  - LPP-1 and -1A Life Preserver Assembly 20-32
  - LPU-21/P Series Life Preserver Assembly 14-36
  - LPU-21C(V)1/P Life Preserver Assembly 26-39
  - LPU-21D/P Life Preserver Assembly 15-39
  - LPU-23/P Series Life Preserver Assembly 16-35
  - LPU-23B(V)1/P Life Preserver Assembly 27-38
  - LPU-23C/P Life Preserver Assembly 18-38
  - LPU-27/P22P-7(V) Life Preserver Assembly 17-36
  - LPU-28/P Life Preserver Assembly 24-30
  - LPU-31/P Life Preserver Assembly 22-28
  - LPU-32/P Life Preserver Assembly 25-32
  - LPU-34/P Life Preserver Assembly 5-24
  - LPU-35/P Life Preserver Assembly 15-39
  - LPU-37/P Life Preserver Assembly 8-24
  - LSC P/N 482 Life Preserver Assembly 24-30
  - Pouch Type Life Preserver Assembly 23-31

Installation
- Carbon Dioxide (CO_2) Cylinders
  - LPP-1 and -1A Life Preserver Assembly 20-46
  - LPU-21/P Series Life Preserver Assembly 14-52
  - LPU-21C(V)1/P Life Preserver Assembly 26-54
  - LPU-21D/P Life Preserver Assembly 15-55
  - LPU-23/P Series Life Preserver Assembly 16-53
  - LPU-23B(V)1/P Life Preserver Assembly 27-55
  - LPU-23C/P Life Preserver Assembly 18-55
  - LPU-27/P22P-7(V) Life Preserver Assembly 17-51
  - LPU-28/P Life Preserver Assembly 24-44
  - LPU-31/P Life Preserver Assembly 22-41
  - LPU-32/P Life Preserver Assembly 25-46
  - LPU-34/P Life Preserver Assembly 5-30
  - LPU-36/P Life Preserver, Low-Profile Floatation Collar 6-41, F6-6
  - LPU-37/P Life Preserver Assembly 8-32
  - LSC P/N 482 Life Preserver Assembly 24-44
  - P/N 487VB TRI-SAR Harness Assembly Floatation Vest 7-14
  - Pouch Type Life Preserver Assembly 23-45

ALPHABETICAL INDEX (Cont)

Subject — Paragraph, Figure, Table Number

I (Cont)

Installation (Cont)
- Inflation Valve Protective Cover
  - LPU-21/P Series Life Preserver Assembly 14-51, F14-4
  - LPU-21C(V)1/P Life Preserver Assembly 26-53, F26-4
  - LPU-21D/P Life Preserver Assembly 15-54, F15-4
  - LPU-23/P Series Life Preserver Assembly 16-52, F16-6
  - LPU-23B(V)1/P Life Preserver Assembly 27-54, F27-7
  - LPU-23C/P Life Preserver Assembly 18-54, F18-7
  - LPU-27/P22P-7(V) Life Preserver Assembly 17-50, F17-4
  - LPU-32/P Life Preserver Assembly 25-65
- Locking Pin Cover (Life Preservers without No. 3 spur grommet), and Fabrication
  - LPU-21/P Series Life Preserver Assembly 14-76, F14-10, F14-11
  - LPU-21C(V)1/P Life Preserver Assembly 26-78, F26-10, F26-11
  - LPU-21D/P Life Preserver Assembly 15-82, F15-12, F15-13
  - LPU-23/P Series Life Preserver Assembly 16-82, F16-16, F16-17
  - LPU-23B(V)1/P Life Preserver Assembly 27-83, F27-16, F27-17
  - LPU-23C/P Life Preserver Assembly 18-87, F18-18, F18-19
  - LPU-27/P22P-7(V) Life Preserver Assembly 17-76, F17-10, F17-11
- Waist Lobe Attachment Patch, and Fabrication
  - LPU-21C(V)1/P Life Preserver Assembly 26-81, F26-13, F26-14
  - LPU-21D/P Life Preserver Assembly 15-79, F15-10
  - LPU-23B(V)1/P Life Preserver Assembly 27-86, F27-19, F27-20
  - LPU-23C/P Life Preserver Assembly 18-84, F18-16, F18-17

Introduction 1-1

J

K

L

Levels of Maintenance 1-19

M

Maintenance
- LPP-1 and -1A Life Preserver Assembly 20-17
- LPU-21/P Series Life Preserver Assembly 14-21
- LPU-21C(V)1/P Life Preserver Assembly 26-24
- LPU-21D/P Life Preserver Assembly 15-24
- LPU-23/P Series Life Preserver Assembly 16-20
- LPU-23B(V)1/P Life Preserver Assembly 27-23
- LPU-23C/P Life Preserver Assembly 18-23
- LPU-27/P22P-7(V) Life Preserver Assembly 17-21
- LPU-28/P Life Preserver Assembly 24-15
- LPU-31/P Life Preserver Assembly 22-13
- LPU-32/P Life Preserver Assembly 25-17

ALPHABETICAL INDEX (Cont)

Subject — Paragraph, Figure, Table Number

M (Cont)

Maintenance (Cont)
- LPU-34/P Life Preserver Assembly . . . 5-13
- LPU-35/P Life Preserver Assembly . . . 15-24
- LPU-36/P Life Preserver, Low-Profile Floatation Collar . . . 6-17
- LPU-37/P Life Preserver Assembly . . . 8-13
- LSC P/N 482 Life Preserver Assembly . . . 24-15
- P/N 487VB TRI-SAR Harness Assembly Floatation Vest . . . 7-3
- Pouch Type Life Preserver Assembly . . . 23-16

Maintenance Documents
- Documenting Maintenance Actions . . . 2-8
- General . . . 2-7
- Naval Aviation Maintenance Program . . . 2-2

Modifications
- LPP-1 and -1A Life Preserver Assembly . . . 20-15
- LPU-21/P Series Life Preserver Assembly . . . 14-19
- LPU-21C(V)1/P Life Preserver Assembly . . . 26-21
- LPU-21D/P Life Preserver Assembly . . . 15-21
- LPU-23/P Series Life Preserver Assembly . . . 16-18
- LPU-23B(V)1/P Life Preserver Assembly . . . 27-21
- LPU-23C/P Life Preserver Assembly . . . 18-21
- LPU-27/P22P-7(V) Life Preserver Assembly . . . 17-19
- LPU-28/P Life Preserver Assembly . . . 24-13
  - Stowage of the AN/PRC-149 Radio . . . 24-64
- LPU-31/P Life Preserver Assembly . . . 22-11
- LPU-32/P Life Preserver Assembly . . . 25-15
- LPU-34/P Life Preserver Assembly . . . 5-11, T5-1
- LPU-35/P Life Preserver Assembly . . . 15-21
- LPU-36/P Life Preserver, Low-Profile Floatation Collar . . . 6-15, T6-1
- LPU-37/P Life Preserver Assembly . . . 8-11, T8-1
- Pouch Type Life Preserver Assembly . . . 23-14

N

Naval Aviation Maintenance Program . . . 2-2

O

P

Packing Procedure
- LPP-1 and -1A Life Preserver Assembly . . . 20-65
- LPU-21/P Series Life Preserver Assembly . . . 14-78
- LPU-21C(V)1/P Life Preserver Assembly . . . 26-85
- LPU-21D/P Life Preserver Assembly . . . 15-85
- LPU-23/P Series Life Preserver Assembly . . . 16-84
- LPU-23B(V)1/P Life Preserver Assembly . . . 27-90
- LPU-23C/P Life Preserver Assembly . . . 18-89
- LPU-27/P22P-7(V) Life Preserver Assembly . . . 17-78

ALPHABETICAL INDEX (Cont)

Subject — Paragraph, Figure, Table Number

P (Cont)

Packing Procedure (Cont)
- LPU-28/P Life Preserver Assembly 24-65
- LPU-31/P Life Preserver Assembly 22-62
- LPU-32/P Life Preserver Assembly 25-66
- LPU-34/P Life Preserver Assembly 5-37
- LPU-35/P Life Preserver Assembly 15-85
- LPU-36/P Life Preserver, Low-Profile Floatation Collar 6-49
- LPU-37/P Life Preserver Assembly 8-39
- LSC P/N 482 Life Preserver Assembly 24-65
- Pouch Type Life Preserver Assembly 23-63

Pneumatic Inflator Valve (Check Valve) Core Tool 3-5

Q

Qualified Personnel 2-4
Quality Assurance 1-16

R

Reassembly
- LPU-21/P Series Life Preserver Assembly 14-69
- LPU-21C(V)1/P Life Preserver Assembly 26-71
- LPU-21D/P Life Preserver Assembly 15-72
- LPU-23/P Series Life Preserver Assembly 16-73
- LPU-23B(V)1/P Life Preserver Assembly 27-74
- LPU-23C/P Life Preserver Assembly 18-75
- LPU-27/P22P-7(V) Life Preserver Assembly 17-69
- LPU-28/P Life Preserver Assembly 24-61
- LPU-31/P Life Preserver Assembly 22-61
- LPU-32/P Life Preserver Assembly 25-60
- LPU-35/P Life Preserver Assembly 15-72

Recementing Fin or Tape Seams
- LPP-1 and -1A Life Preserver Assembly 20-56
- LPU-21/P Series Life Preserver Assembly 14-63
- LPU-21C(V)1/P Life Preserver Assembly 26-66
- LPU-21D/P Life Preserver Assembly 15-67
- LPU-23/P Series Life Preserver Assembly 16-66
- LPU-23B(V)1/P Life Preserver Assembly 27-68
- LPU-23C/P Life Preserver Assembly 18-67
- LPU-27/P22P-7(V) Life Preserver Assembly 17-63
- LPU-28/P Life Preserver Assembly 24-55
- LPU-31/P Life Preserver Assembly 22-53
- LPU-32/P Life Preserver Assembly 25-57
- LPU-35/P Life Preserver Assembly 15-67

ALPHABETICAL INDEX (Cont)

Subject — Paragraph, Figure, Table Number

R (Cont)

Repair
- Corroded CO_2 Inflation Valve
  - LPP-1 and -1A Life Preserver Assembly 20-61, F20-7
  - LPU-21/P Series Life Preserver Assembly 14-71, F14-8
  - LPU-21C(V)1/P Life Preserver Assembly 26-73, F26-8
  - LPU-21D/P Life Preserver Assembly 15-74, F15-8
  - LPU-27/P22P-7(V) Life Preserver Assembly 17-71, F17-8
  - LPU-28/P Life Preserver Assembly 24-57, F24-5
  - LPU-31/P Life Preserver Assembly 22-57, F22-6
  - LPU-32/P Life Preserver Assembly 25-62
  - LPU-35/P Life Preserver Assembly 15-74
  - LSC P/N 482 Life Preserver Assembly 24-57, F24-5
- Casing Grommet
  - LPU-21/P Series Life Preserver Assembly 14-58
  - LPU-21C(V)1/P Life Preserver Assembly 26-61
  - LPU-21D/P Life Preserver Assembly 15-62
  - LPU-23/P Series Life Preserver Assembly 16-61
  - LPU-23B(V)1/P Life Preserver Assembly 27-63
  - LPU-23C/P Life Preserver Assembly 18-62
  - LPU-27/P22P-7(V) Life Preserver Assembly 17-58
  - LPU-32/P Life Preserver Assembly 25-53
  - LPU-35/P Life Preserver Assembly 15-62
- Casings
  - LPU-21/P Series Life Preserver Assembly 14-57
  - LPU-21C(V)1/P Life Preserver Assembly 26-60
  - LPU-21D/P Life Preserver Assembly 15-61
  - LPU-23/P Series Life Preserver Assembly 16-60
  - LPU-23B(V)1/P Life Preserver Assembly 27-62
  - LPU-23C/P Life Preserver Assembly 18-61
  - LPU-27/P22P-7(V) Life Preserver Assembly 17-57
  - LPU-28/P Life Preserver Assembly 24-51
  - LPU-31/P Life Preserver Assembly 22-48
  - LPU-32/P Life Preserver Assembly 25-52
  - LPU-35/P Life Preserver Assembly 15-61
- Flare Pouch Repair
  - LPU-21/P Series Life Preserver Assembly 14-67, F14-7
  - LPU-21C(V)1/P Life Preserver Assembly 26-69, F26-7
  - LPU-21D/P Life Preserver Assembly 15-70, F15-7
  - LPU-23/P Series Life Preserver Assembly 16-71, F16-12
  - LPU-23B(V)1/P Life Preserver Assembly 27-72, F27-12
  - LPU-23C/P Life Preserver Assembly 18-73, F18-12
  - LPU-27/P22P-7(V) Life Preserver Assembly 17-67, F17-7
- Patching
  - LPP-1 and -1A Life Preserver Assembly 20-53
  - LPU-21/P Series Life Preserver Assembly 14-60
  - LPU-21C(V)1/P Life Preserver Assembly 26-63
  - LPU-21D/P Life Preserver Assembly 15-64
  - LPU-23/P Series Life Preserver Assembly 16-63
  - LPU-23B(V)1/P Life Preserver Assembly 27-65

ALPHABETICAL INDEX (Cont)

Subject — Paragraph, Figure, Table Number

R (Cont)

Repair (Cont)
- Patching (Cont)
  - LPU-23C/P Life Preserver Assembly 18-64
  - LPU-27/P22P-7(V) Life Preserver Assembly 17-60
  - LPU-28/P Life Preserver Assembly 24-53
  - LPU-31/P Life Preserver Assembly 22-50
  - LPU-32/P Life Preserver Assembly 25-55
  - LPU-35/P Life Preserver Assembly 15-64
  - Pouch Type Life Preserver Assembly 23-53
- Protective Cover Repairs
  - LPU-31/P Life Preserver Assembly 22-48
  - LPU-32/P Life Preserver Assembly 25-65
  - LPU-35/P Life Preserver Assembly 15-77

Replacement
- Beaded Handle Snap Fasteners
  - LPU-34/P Life Preserver Assembly 5-29B
  - LPU-36/P Life Preserver, Low-Profile Floatation Collar 6-40
  - LPU-37/P Life Preserver Assembly 8-31
- Beaded Inflation Handle Assembly
  - LPU-21/P Series Life Preserver Assembly 14-70
  - LPU-21C(V)1/P Life Preserver Assembly 26-72
  - LPU-21D/P Life Preserver Assembly 15-73
  - LPU-23/P Series Life Preserver Assembly 16-74
  - LPU-23B(V)1/P Life Preserver Assembly 27-75
  - LPU-23C/P Life Preserver Assembly 18-76
  - LPU-27/P22P-7(V) Life Preserver Assembly 17-70
  - LPU-32/P Life Preserver Assembly 25-61
  - LPU-34/P Life Preserver Assembly 5-34
  - LPU-35/P Life Preserver Assembly 15-73
  - LPU-37/P Life Preserver Assembly 8-36
- Bladder Collar Lobe Uni-Directional Snap Fastener Stud
  - LPU-21C(V)1/P Life Preserver Assembly 26-84
  - LPU-21D/P Life Preserver Assembly 15-84
- Check Valve Assembly
  - P/N 487VB TRI-SAR Harness Assembly Floatation Vest 7-13
- Collar Lobe Snaphooks
  - LPU-21/P Series Life Preserver Assembly 14-66
  - LPU-23/P Series Life Preserver Assembly 16-70
  - LPU-23C/P Life Preserver Assembly 18-72
  - LPU-27/P22P-7(V) Life Preserver Assembly 17-66
- Collar Lobe Uni-Directional Snap Fasteners and Webbing
  - LPU-21C(V)1/P Life Preserver Assembly 26-79, F26-12
  - LPU-21D/P Life Preserver Assembly 15-83, F15-14
  - LPU-35/P Life Preserver Assembly 15-83
- Defective Plastic Snap Fasteners with Metal Snap Fasteners
  - LPP-1 and -1A Life Preserver Assembly 20-59
  - LPU-31/P Life Preserver Assembly 22-56
  - Pouch Type Life Preserver Assembly 23-57

ALPHABETICAL INDEX (Cont)

Subject — Paragraph, Figure, Table Number

R (Cont)

Replacement (Cont)
- Flare and Dye Marker Pouch Snaphooks
  - LPU-21/P Series Life Preserver Assembly . . . 14-65
  - LPU-21C(V)1/P Life Preserver Assembly . . . 26-68
  - LPU-21D/P Life Preserver Assembly . . . 15-69
  - LPU-23/P Series Life Preserver Assembly . . . 16-69
  - LPU-23B(V)1/P Life Preserver Assembly . . . 27-71
  - LPU-23C/P Life Preserver Assembly . . . 18-71
  - LPU-27/P22P-7(V) Life Preserver Assembly . . . 17-65
- Inflation Lanyard Cord
  - LPP-1 and -1A Life Preserver Assembly . . . 20-57, 20-58
  - LPU-28/P Life Preserver Assembly . . . 24-56
  - LPU-31/P Life Preserver Assembly . . . 22-54, 22-55
  - LSC P/N 482 Life Preserver Assembly . . . 24-56
  - Pouch Type Life Preserver Assembly . . . 23-56
- Lifeline and Toggle Assembly
  - LPP-1 and -1A Life Preserver Assembly . . . 20-64
  - Pouch Type Life Preserver Assembly . . . 23-62
- Oral Inflation Valve
  - LPP-1 and -1A Life Preserver Assembly . . . 20-55
  - LPU-21/P Series Life Preserver Assembly . . . 14-62
  - LPU-21C(V)1/P Life Preserver Assembly . . . 26-65
  - LPU-21D/P Life Preserver Assembly . . . 15-66
  - LPU-23/P Series Life Preserver Assembly . . . 16-65
  - LPU-23B(V)1/P Life Preserver Assembly . . . 27-67
  - LPU-23C/P Life Preserver Assembly . . . 18-66
  - LPU-27/P22P-7(V) Life Preserver Assembly . . . 17-62
  - LPU-28/P Life Preserver Assembly . . . 24-62
  - LPU-31/P Life Preserver Assembly . . . 22-52
  - LPU-32/P Life Preserver Assembly . . . 25-56
  - LPU-35/P Life Preserver Assembly . . . 15-66
  - LSC P/N 482 Life Preserver Assembly . . . 24-62
  - Pouch Type Life Preserver Assembly . . . 23-55
- Pneumatic Inflator Valve (Check Valve) Assembly
  - LPP-1 and -1A Life Preserver Assembly . . . 20-63
  - LPU-21/P Series Life Preserver Assembly . . . 14-73
  - LPU-21C(V)1/P Life Preserver Assembly . . . 26-75
  - LPU-21D/P Life Preserver Assembly . . . 15-76
  - LPU-23/P Series Life Preserver Assembly . . . 16-79
  - LPU-23B(V)1/P Life Preserver Assembly . . . 27-80
  - LPU-23C/P Life Preserver Assembly . . . 18-81
  - LPU-27/P22P-7(V) Life Preserver Assembly . . . 17-73
  - LPU-28/P Life Preserver Assembly . . . 24-59
  - LPU-31/P Life Preserver Assembly . . . 22-59
  - LSC P/N 482 Life Preserver Assembly . . . 24-59
  - Pouch Type Life Preserver Assembly . . . 23-60

ALPHABETICAL INDEX (Cont)

Subject — Paragraph, Figure, Table Number

R (Cont)

Replacement (Cont)
- Pull the Dot Snap Fasteners
  - LPU-34/P Life Preserver Assembly 5-29A
  - LPU-36/P Life Preserver, Low-Profile Floatation Collar 6-39
  - LPU-37/P Life Preserver Assembly 8-30
- Top and Bottom Gaskets (Inflator)
  - LPP-1 and -1A Life Preserver Assembly 20-62
  - LPU-21/P Series Life Preserver Assembly 14-72
  - LPU-21C(V)1/P Life Preserver Assembly 26-74
  - LPU-21D/P Life Preserver Assembly 15-75
  - LPU-23/P Series Life Preserver Assembly 16-78
  - LPU-23B(V)1/P Life Preserver Assembly 27-79
  - LPU-23C/P Life Preserver Assembly 18-80
  - LPU-27/P22P-7(V) Life Preserver Assembly 17-72
  - LPU-28/P Life Preserver Assembly 24-58
  - LPU-31/P Life Preserver Assembly 22-58
  - LPU-32/P Life Preserver Assembly 25-63
  - LPU-35/P Life Preserver Assembly 15-75
  - LSC P/N 482 Life Preserver Assembly 24-58
  - Pouch Type Life Preserver Assembly 23-59

S

Safety Tying (Thread)
- LPU-21/P Series Life Preserver Assembly 14-70
- LPU-21C(V)1/P Life Preserver Assembly 26-72
- LPU-21D/P Life Preserver Assembly 15-73
- LPU-23/P Series Life Preserver Assembly 16-74
- LPU-23B(V)1/P Life Preserver Assembly 27-75
- LPU-23C/P Life Preserver Assembly 18-76
- LPU-27/P22P-7(V) Life Preserver Assembly 17-70
- LPU-34/P Life Preserver Assembly 5-38
- LPU-37/P Life Preserver Assembly 8-40
- Pouch Type Life Preserver Assembly 23-46

Safety Wiring (Wire)
- LPP-1 and -1A Life Preserver Assembly 20-47
- LPU-28/P Life Preserver Assembly 24-45
- LPU-31/P Life Preserver Assembly 22-42
- LSC P/N 482 Life Preserver Assembly 24-45
- P/N 487VB TRI-SAR Harness Assembly Floatation Vest 7-15
- Pouch Type Life Preserver Assembly 23-46

Saltwater Decontamination
- LPU-28/P Life Preserver Assembly (Soniform Model P/N SF8580) 24-43
- LPU-34/P Life Preserver Assembly 5-41
- LPU-36/P Life Preserver, Low-Profile Floatation Collar 6-53
- LPU-37/P Life Preserver Assembly 8-43
- LSC P/N 482 Life Preserver Assembly 24-43A

Supplementary Publications 1-21

ALPHABETICAL INDEX (Cont)

Subject — Paragraph, Figure, Table Number

T

Technical Directives and Forms 1-15
Technical Publication Deficiency Report 1-13
Temperature Conversion Chart
LPP-1 and -1A Life Preserver Assembly T20-5
LPU-21/P Series Life Preserver Assembly T14-5
LPU-21C(V)1/P Life Preserver Assembly T26-4
LPU-21D/P Life Preserver Assembly T15-4
LPU-23/P Series Life Preserver Assembly T16-5
LPU-23B(V)1/P Life Preserver Assembly T27-4
LPU-23C/P Life Preserver Assembly T18-4
LPU-27/P22P-7(V) Life Preserver Assembly T17-4
LPU-28/P Life Preserver Assembly T24-5
LPU-31/P Life Preserver Assembly T22-3
LPU-34/P Life Preserver Assembly T5-3
LPU-37/P Life Preserver Assembly T8-3
LSC P/N 482 Life Preserver Assembly T24-5
Pouch Type Life Preserver Assembly T23-4
Tests
Beaded Inflation Handle Pull Test
LPU-21/P Series Life Preserver Assembly 14-43
LPU-21C(V)1/P Life Preserver Assembly 26-45
LPU-21D/P Life Preserver Assembly 15-46
LPU-23/P Series Life Preserver Assembly 16-44
LPU-23B(V)1/P Life Preserver Assembly 27-46
LPU-23C/P Life Preserver Assembly 18-46
LPU-27/P22P-7(V) Life Preserver Assembly 17-42
LPU-32/P Life Preserver Assembly 25-38
LPU-34/P Life Preserver Assembly 5-34
LPU-35/P Life Preserver Assembly 15-46
LPU-37/P Life Preserver Assembly 8-36
Functional Test
LPP-1 and -1A Life Preserver Assembly 20-30
LPU-21/P Series Life Preserver Assembly 14-34
LPU-21C(V)1/P Life Preserver Assembly 26-37
LPU-21D/P Life Preserver Assembly 15-37
LPU-23/P Series Life Preserver Assembly 16-33
LPU-23B(V)1/P Life Preserver Assembly 27-36
LPU-23C/P Life Preserver Assembly 18-36
LPU-27/P22P-7(V) Life Preserver Assembly 17-34
LPU-28/P Life Preserver Assembly 24-28
LPU-31/P Life Preserver Assembly 22-26
LPU-32/P Life Preserver Assembly 25-30
LPU-34/P Life Preserver Assembly 5-32
LPU-35/P Life Preserver Assembly 15-37
LPU-36/P Life Preserver, Low-Profile Floatation Collar 6-43
LPU-37/P Life Preserver Assembly 8-34
LSC P/N 482 Life Preserver Assembly 24-28
P/N 487VB TRI-SAR Harness Assembly Floatation Vest 7-10
Pouch Type Life Preserver Assembly 23-29

ALPHABETICAL INDEX (Cont)

Subject — Paragraph, Figure, Table Number

T (Cont)

Tests (Cont)
- Leakage Test
  - LPP-1 and -1A Life Preserver Assembly 20-39, F20-3, T20-5, T20-6
  - LPU-21/P Series Life Preserver Assembly 14-44, F14-3, T14-5, T14-6
  - LPU-21C(V)1/P Life Preserver Assembly 26-46, F26-3, T26-4, T26-5
  - LPU-21D/P Life Preserver Assembly 15-47, F15-3, T15-4, T15-5
  - LPU-23/P Series Life Preserver Assembly 16-45, F16-5, T16-5, T16-6
  - LPU-23B(V)1/P Life Preserver Assembly 27-47, F27-6, T27-4, T27-5
  - LPU-23C/P Life Preserver Assembly 18-47, F18-6, T18-4, T18-5
  - LPU-27/P22P-7(V) Life Preserver Assembly 17-43, F17-3, T17-4, T17-5
  - LPU-28/P Life Preserver Assembly 24-36, F24-2, T24-5, T24-6
  - LPU-31/P Life Preserver Assembly 22-34, F22-3, T22-3, T22-4
  - LPU-32/P Life Preserver Assembly 25-39
  - LPU-34/P Life Preserver Assembly 5-33
  - LPU-35/P Life Preserver Assembly 15-47
  - LPU-36/P Life Preserver, Low-Profile Floatation Collar 6-45, T6-3
  - LPU-37/P Life Preserver Assembly 8-35
  - LSC P/N 482 Life Preserver Assembly 24-36, F24-2, T24-5, T24-6
  - P/N 487VB TRI-SAR Harness Assembly Floatation Vest 7-11
  - Pouch Type Life Preserver Assembly 23-38, F23-3, T23-4, T23-5
- Test Procedures, Compartment/Cell
  - LPP-1 and -1A Life Preserver Assembly 20-41
  - LPU-21/P Series Life Preserver Assembly 14-46
  - LPU-21C(V)1/P Life Preserver Assembly 26-48
  - LPU-21D/P Life Preserver Assembly 15-49
  - LPU-23/P Series Life Preserver Assembly 16-47
  - LPU-23B(V)1/P Life Preserver Assembly 27-49
  - LPU-23C/P Life Preserver Assembly 18-49
  - LPU-27/P22P-7(V) Life Preserver Assembly 17-45
  - LPU-28/P Life Preserver Assembly 24-38
  - LPU-31/P Life Preserver Assembly 22-36
  - LSC P/N 482 Life Preserver Assembly 24-38
  - Pouch Type Life Preserver Assembly 23-40
- Test Fixture Schematic
  - Life Preserver Special Tools and Support Equipment 3-3, F3-1
  - LPP-1 and -1A Life Preserver Assembly 20-40, F20-3
  - LPU-21/P Series Life Preserver Assembly 14-45, F14-3
  - LPU-21C(V)1/P Life Preserver Assembly 26-47, F26-3
  - LPU-21D/P Life Preserver Assembly 15-48, F15-3
  - LPU-23/P Series Life Preserver Assembly 16-46, F16-5
  - LPU-23B(V)1/P Life Preserver Assembly 27-48, F27-6
  - LPU-23C/P Life Preserver Assembly 18-48, F18-6
  - LPU-27/P22P-7(V) Life Preserver Assembly 17-44, F17-3
  - LPU-28/P Life Preserver Assembly 24-37, F24-2
  - LPU-31/P Life Preserver Assembly 22-35, F22-3
  - LPU-32/P Life Preserver Assembly 25-40
  - LPU-34/P Life Preserver Assembly 5-33, F5-4
  - LPU-35/P Life Preserver Assembly 15-48, F15-3
  - LPU-37/P Life Preserver Assembly 8-35, F8-4
  - LSC P/N 482 Life Preserver Assembly 24-37, F24-2
  - Pouch Type Life Preserver Assembly 23-39, F23-3

ALPHABETICAL INDEX (Cont)

Subject	Paragraph, Figure, Table Number
U	
Updating	1-12
V	
W	
X	
Y	
Z	

THIS PAGE INTENTIONALLY LEFT BLANK.